FRONT SUSPENSION

CONTENTS

FRONT SUSPENSION 33A

ELECTRONIC CONTROL SUSPENSION (ECS)* 33B

ELECTRONIC CONTROL SUSPENSION (ACTIVE PREVIEW ECS) . . . 33C

NOTE
(1) Shaded groups in the above list are not included in this manual.
(2) *: Up to 1995 models

NOTES

FRONT SUSPENSION

CONTENTS

LOWER ARM **10**

ON-VEHICLE SERVICE **6**

Front Wheel Alignment 6

Wheel Bearing Adjustment 6

SPECIAL TOOLS **4**

SPECIFICATIONS **2**

General Specifications 2

Service Specifications 3

STABILIZER BAR **12**

STRUT ASSEMBLY **7**

TROUBLESHOOTING **5**

SPECIFICATIONS

GENERAL SPECIFICATIONS

SUSPENSION SYSTEM

Items	Specification
Suspension type	McPherson strut with coil spring and compression rod type

COIL SPRING (Hatchback)

<Up to 1993 models>

Items	FWD	AWD
Wire dia. x O.D. x free length mm (in.)	M/T: 14.8 x 170 x 322.5 (.58x 6.69 x 12.70)	15.7x170x301.5 (.62 x 6.69 x 11.87)
	A/T, M/T*: 15.0 x 170 x 331.0 (.59 x 6.69 x 13.03)	
Coil spring identification color	M/T: Orange x 1	Blue x 1
	A/T: Orange x 2	
Spring constant N/mm (lbs./in.)	30 (168)	39 (218)

<From 1994 models>

Items	FWD	AWD
Wire dia. x O.D. x free length mm (in.)	M/T: 14.4 x 170 x 322.7 (.56x 6.69 x 12.4)	15.2 × 170 × 301.6 (.60 x 6.69 x 11.87)
	NT, M/T*: 14.5 x 170 x 329.3 (.57 x 6.69 x 12.96)	
Coil spring identification color	M/T: Green x 1	Brown x 1
	A/T: Green x 2	
Spring constant N/mm (lbs./in.)	29 (162)	38 (212)

COIL SPRING (Convertible)

Items	FWD	AWD
Wire dia. x O.D. x free length mm (in.)	14.7 x 170 x 338.0 (.58x 6.69 x 13.31)	15.4 × 170 × 308.5 (.61 x 6.69 x 12.15)
Coil spring identification color	Orange x 1	Gray x 1
Spring constant N/mm (lbs./in.)	30 (168)	39 (218)

NOTE
*: Option

SHOCK ABSORBER

Items		Vehicles without ECS	Vehicles with ECS (up to 1995 models)
Type		Hydraulic, cylindrical double acting type	Hydraulic, cylindrical double acting type
Maximum length mm (in.)		485 (19.09)	485 (19.09)
Compressed length mm (in.)		335 (13.19)	335 (13.19)
Stroke mm (in.)		150 (5.91)	150 (5.91)
Damping force [at 0.3 m/sec. (0.984 ft./sec.)]	Expansion	1,080 (238)	Hard: 2,530 (558) Medium: 1,580 (348) Soft: 620 (137)
	Contraction	540 (119)	Hard: 1 ,190 (262) Medium: 1,120 (247) Soft: 970 (214)

SERVICE SPECIFICATIONS

Items		Standard value
Camber		0" ± 30
Caster		3°55' ± 30
Toe-in mm (in.)		0 ± 3 (0 ± .12)
Lower arm ball joint breakaway torque Nm (in.lbs.)		10–22 (86-191)
Stabilizer link ball joint breakaway torque Nm (in.lbs.)		1.7-3.2 (15-28)
Steering angle	Inner wheel	33°45
	Cuter wheel	28°21'

SPECIAL TOOLS

Tool	Tool number and name	Supersession	Application
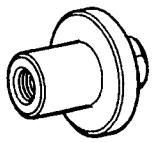	MB991004 Wheel alignment gauge attachment	MB991004-01 or General service tool	Measurement of the wheel alignment
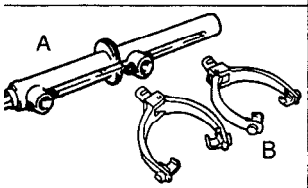	A: MB991 237 Spring compressor body B: MB991 238 Arm set	MIT62220	Compression of the front coil spring
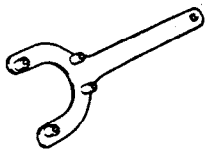	MB991176 Spring seat holder	MIT62220	Disassembly/assembly of the strut assembly
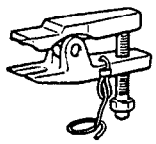	MB991113 Steering linkage puller	MB991113-01	Removal of the lower arm ball joint and tie rod
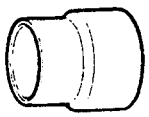	MB990799 Ball joint remover and installer	MB990799-01	Installation of the dust shield
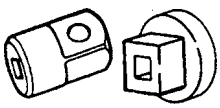	MB990326 Preload socket	General service tool	Measurement of the ball joint and stabilizer link ball joint starting torque

TROUBLESHOOTING

Symptom	Probable cause	Remedy
Steering wheel is heavy, vibrates or pulls to one side	Suspension malfunction	Adjust or replace
	Ball joint	
	Coil spring	
	Wheel alignment	
	Unbalanced or worn tires	
Excessive vehicle rolling	Broken or deteriorated stabilizer	Replace
	Shock absorber malfunction	
Poor riding	Improper tire inflation pressure	Adjust
	Broken or deteriorated coil spring	Replace
	Shock absorber malfunction	
Inclination of vehicle	Broken or deteriorated coil spring	Replace
Noise	Lack of lubrication	Lubricate
	Looseness and wear of each part	Retighten or replace
	Broken coil spring	Replace
	Shock absorber malfunction	

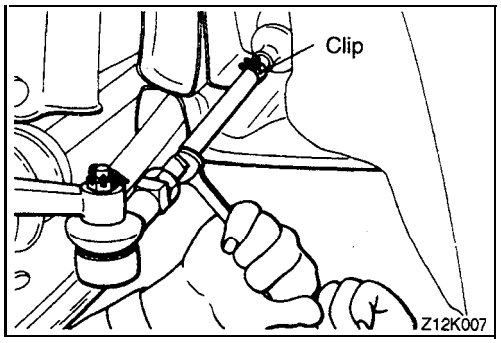

ON-VEHICLE SERVICE

FRONT WHEEL ALIGNMENT

TOE-IN

Standard value: 0 ± 3 mm (0 ± .12 in.)

1. Adjust the toe-in by undoing the clips and turning the left and right tie rod turnbuckles by the same amount (in opposite directions).
2. After making the adjustments, use a turning radius gauge to confirm that the steering wheel turning angle is within the standard value range. (Refer to GROUP 37A – On-vehicle Service.)

Standard value:

inner wheel	**33°45'**
Outer wheel	**28°21'**

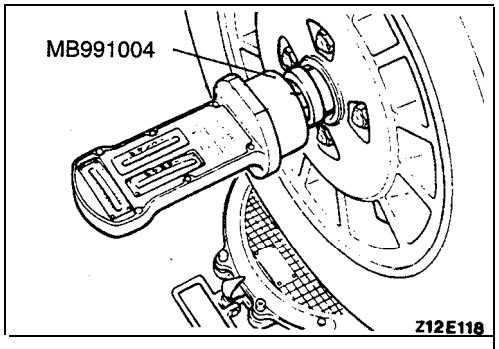

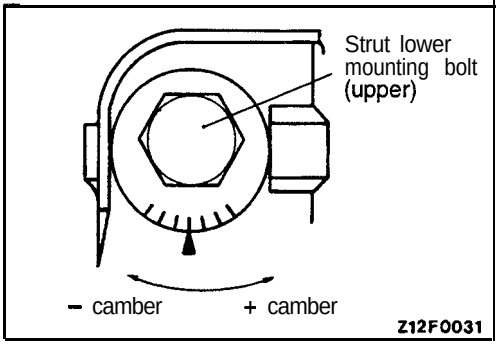

CAMBER AND CASTER

Standard value:

Camber 0° ± 30'
Caster 3°55' ± 30'

Install the special tool by tightening it to the same torque as that applied to the drive shaft nut.
To adjust camber, turn the strut lower mounting bolt (upper). One graduation is equivalent to about 20' in camber. Caster has been factory-adjusted to the standard value and requires no adjustment.

Caution

1. **One camber graduation changes toe by about 0.5 mm (.02 in.). Be sure to adjust toe after camber has been adjusted.**
2. **The difference in camber between right and left should be within 0°30'.**

WHEEL BEARING ADJUSTMENT

Bearing preload is preset to the specified value by design and therefore can not be adjusted.

STRUT ASSEMBLY

REMOVAL AND INSTALLATION

Post-installation Operation
- Wheel Alignment Adjustment (Refer to P.33A-6.)

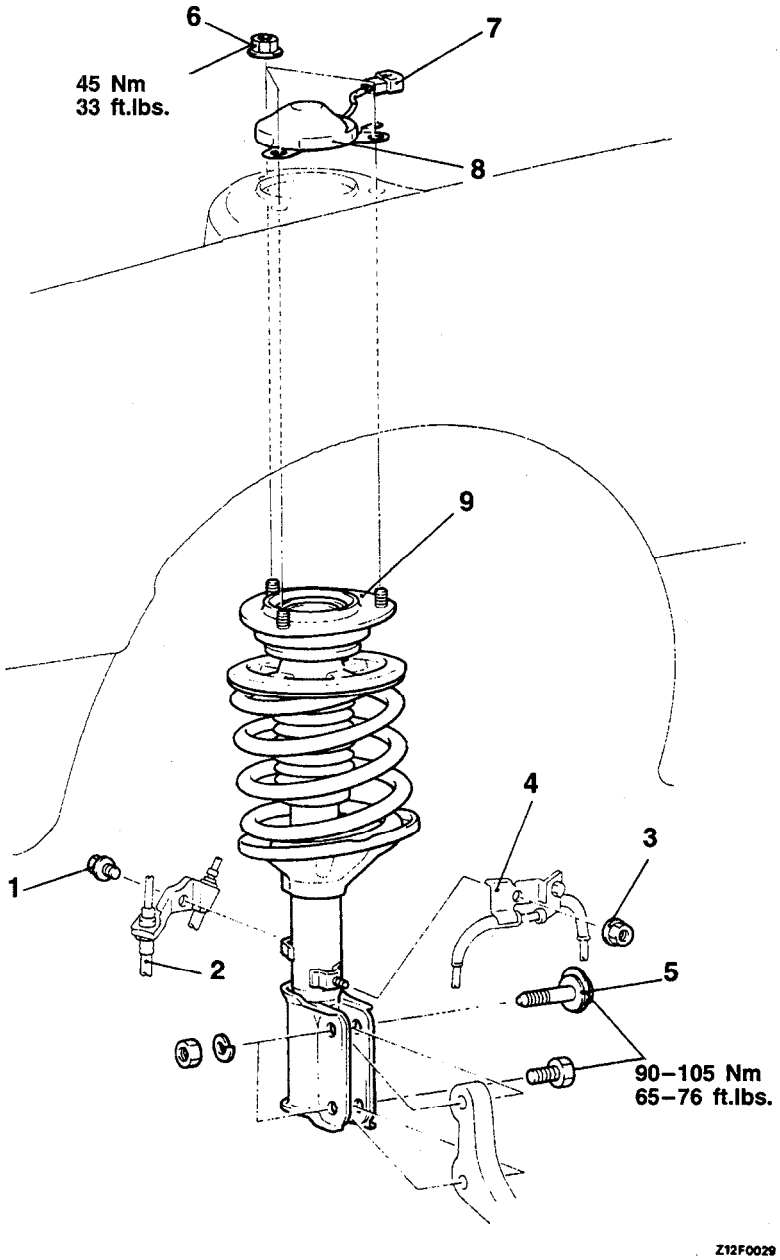

Removal steps

1. Brake hose tube clamp mounting bolt
2. Brake hose tube clamp
3. Front speed sensor clamp mounting nut <ABS>
4. Front speed sensor clamp <ABS>
5. Strut lower mounting bolt
6. Strut upper mounting bolt
7. ECS connector <EC&-
8. Cap <ECS> or dust cover
9. Strut assembly

TSB Revision

DISASSEMBLY AND REASSEMBLY

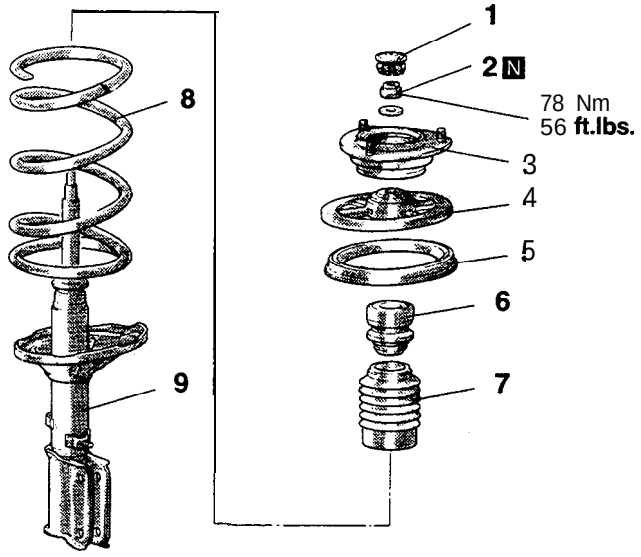

12F0030

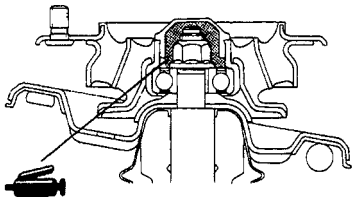

12F0024
00000616

Caution
When applying the grease, take care that grease does not adhere to the insulator's rubber part.

Disassembly steps

1. Dust shield
◀A▶ ▶B◀ 2. Self-locking nut
3. Strut insulator assembly
▶A◀ 4. Spring upper seat assembly'
5. Upper spring pad
6. Bump rubber
7. Dust shield
8. Front coil spring
9. Strut assembly

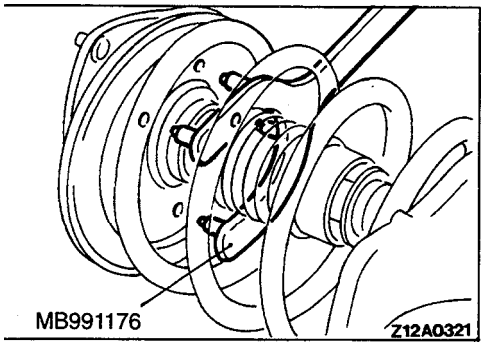

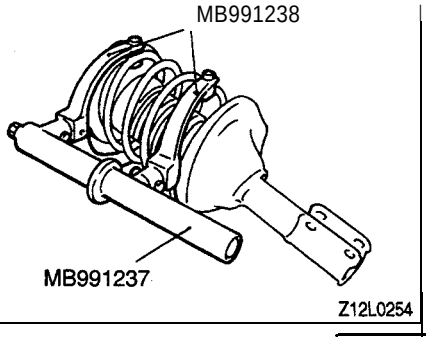

DISASSEMBLY SERVICE POINT

◀A▶ SELF-LOCKING NUT REMOVAL

(1) Holding the spring upper seat with the special tool, loosen the self-locking nut.

Caution
The self-locking nut should be loosened only not removed.

(2) Using the special tools, compress the coil spring, and then remove the self-locking nut.

Caution
(1) Install the special tools evenly, and so that the maximum length will be attained within the installation range.
(2) Do not use an air tool to tighten the bolt of the special tool and to remove the self-locking nut.

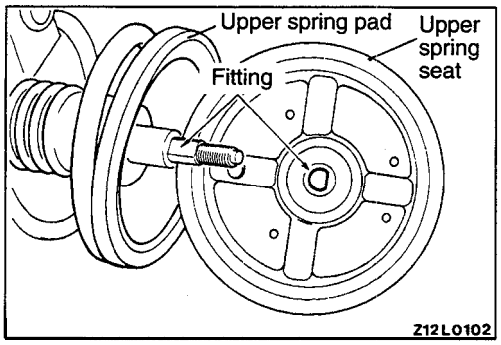

REASSEMBLY SERVICE POINTS

▶A◀ SPRING UPPER SEAT ASSEMBLY INSTALLATION

(1) Assemble the spring upper seat to the piston rod, fitting the notch in the rod to the shaped hole in spring seat.

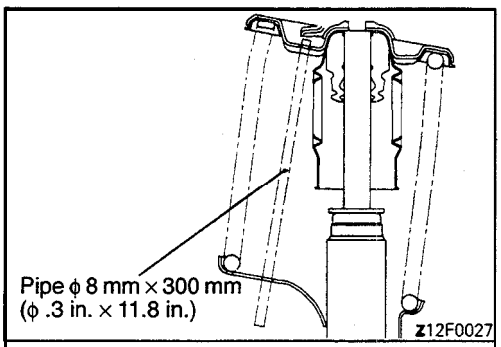

(2) Using a pipe, line up the holes in the strut assembly spring lower seat with the hole in the spring upper seat.

NOTE
The job is easily accomplished with a pipe [ϕ 8 mm x 300 mm (ϕ .3 in. x 11.8 in.)].

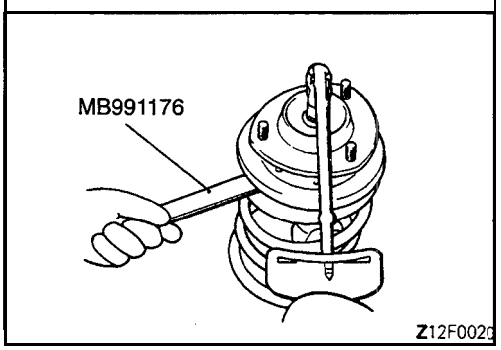

▶B◀ SELF-LOCKING NUT INSTALLATION

(1) With the coil spring held compressed by the special tools (MB991 237 and MB991 238), provisionally tighten the self-locking nut.

Caution
Do not use an air tool to tighten the bolt of the special tool.

(2) Correctly align both ends of the coil spring with the grooves in the spring seat, and then loosen the special tools (MB991237 and MB991238).

(3) Using the special tool, tighten the strut insulator at the specified torque.

Caution
Do not use an air tool.

LOWER ARM

REMOVAL AND INSTALLATION

Post-installation Operation
- Wheel Alignment- Adjustment (Refer to P.33A-6.)

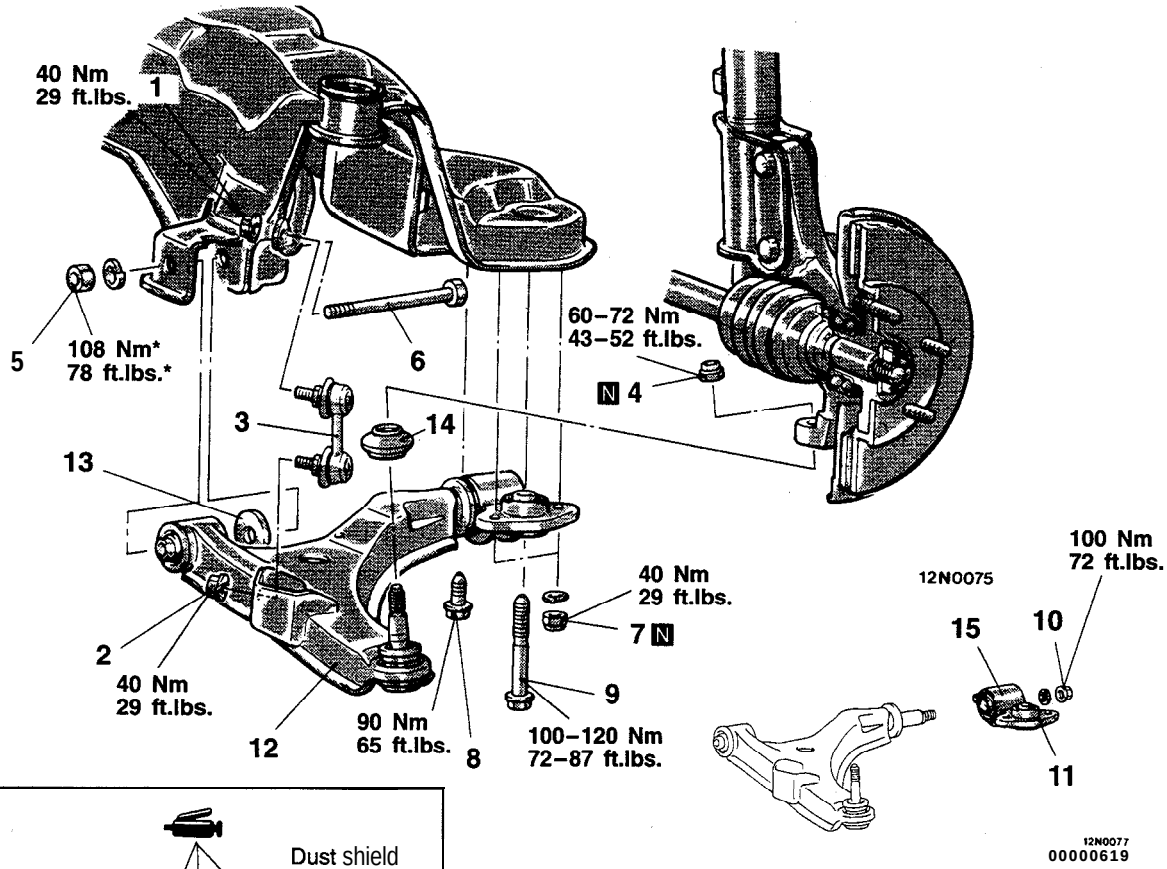

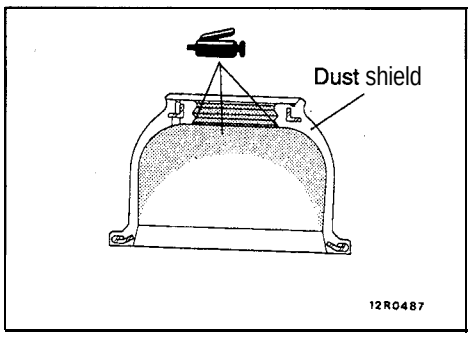

Removal steps

1. Stabilizer link mounting nut (stabilizer bar side)
2. Stabilizer link mounting nut (lower arm side)
3. Stabilizer link
4. ◀A▶ Self-locking nut connecting lower arm ball joint to knuckle
5. Lower arm mounting nut
6. Lower arm mounting bolt
7. Clamp mounting self-locking nut
8. Clamp mounting bolt (small)
9. Clamp mounting bolt (large)
10. ▶A◀ Lower arm clamp mounting self-locking nut
11. Lower arm mounting clamp
12. Lower arm
13. Stopper
14. Dust shield
15. Rod bushing

NOTE
*: Indicates parts which should be temporarily tightened, and then fully tightened with the vehicle on the ground in the unladen condition.

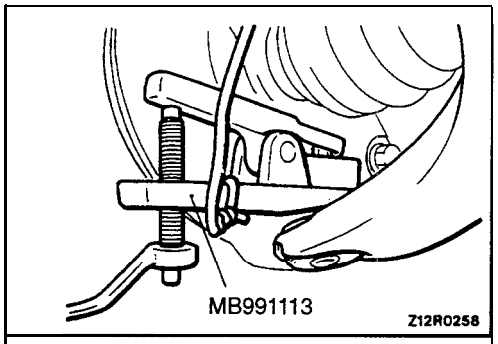

REMOVAL SERVICE POINT

◀A▶ LOWER ARM BALL JOINT REMOVAL

Using the special tool, disconnect the knuckle from the lower arm ball joint.

Caution

1. **Be sure to tie the cord of the special tool to a nearby part,**
2. **Loosen the nut but do not remove it.**

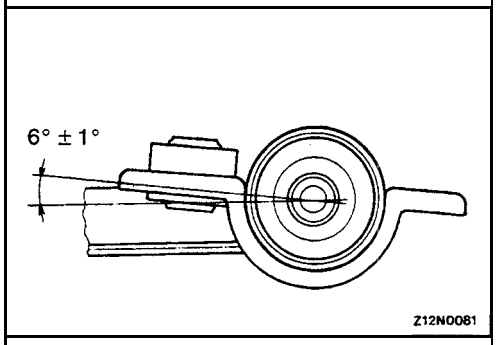

INSTALLATION SERVICE POINT

▶A◀ LOWER ARM CLAMP MOUNTING SELF-LOCKING NUT INSTALLATION

Place the lower arm bushing bracket so that its mounting surface tilts 6° ± 1° with respect to the bottom surface of the lower arm; then, mount the self-locking nut.

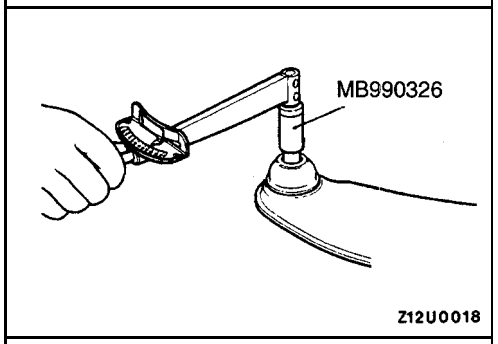

INSPECTION

- Check the bushing for wear and deterioration.
- Check the lower arm for bend or breakage.
- Check the clamp for deterioration or damage.
- Check the ball joint dust shield for cracks.
- Check all bolts for condition and straightness.

CHECKING BALL JOINT FOR BREAKAWAY TORQUE

Using the special tool, measure the ball joint breakaway torque.

Standard value: 10–22 Nm (86-191 in.lbs.)

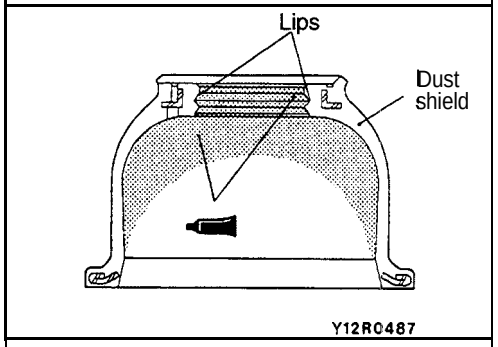

BALL JOINT DUST SHIELD REPLACEMENT

(1) Remove the dust shield.
(2) Apply multipurpose grease to the lip and inside of the dust shield.

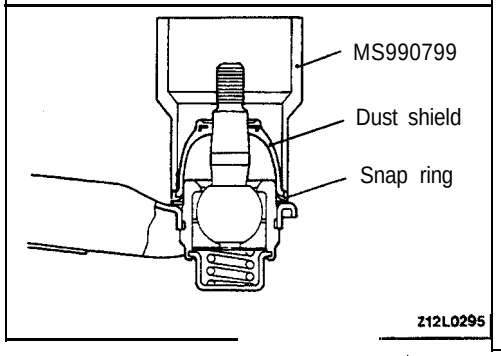

(3) Drive in the dust shield with special tool until it is fully seated.

STABILIZER BAR

REMOVAL AND INSTALLATION

Pre-removal and Post-installation Operation
- Front Exhaust Pipe Removal and installation (Refer to GROUP 15 – Exhaust Pipe and Main Muffler.)
- Under Cover Removal and Installation
- Left Member and Right Member Removal and Installation (Refer to GROUP 32 – Right Member, Left Member and Crossmember.)

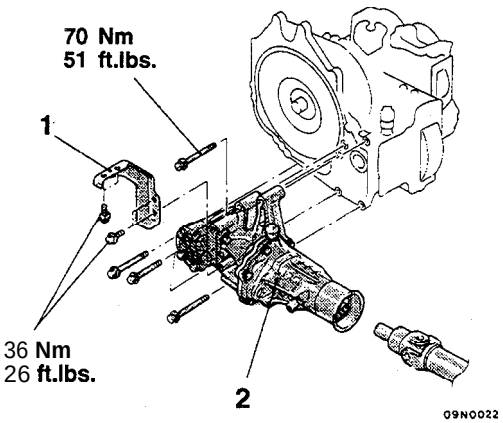

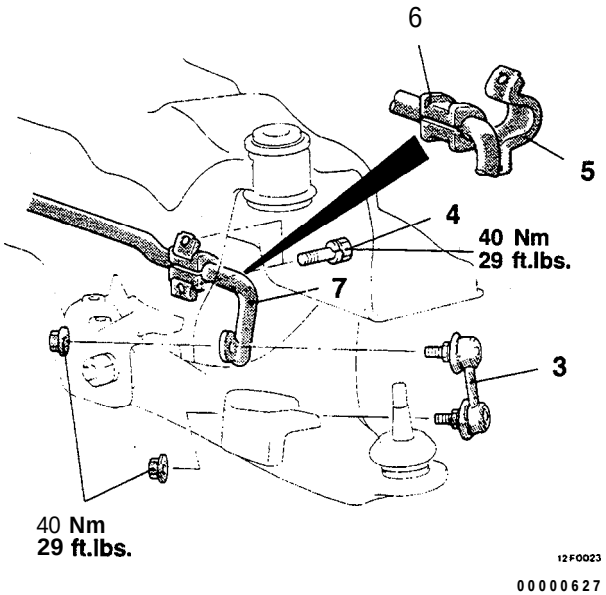

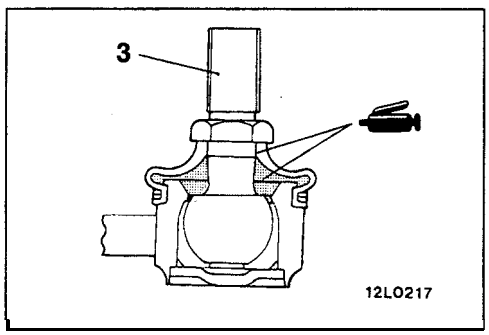

Removal steps

1. Transmission stay B <AWD vehicles with automatic transaxle>
2. Transfer (AWD) (Refer to GROUP 22 – Transfer.)
3. Stabilizer link
4. Stabilizer bar bracket mounting bolt
▶A◀ 5. Stabilizer bar bracket
6. Bushing
7. Stabilizer bar

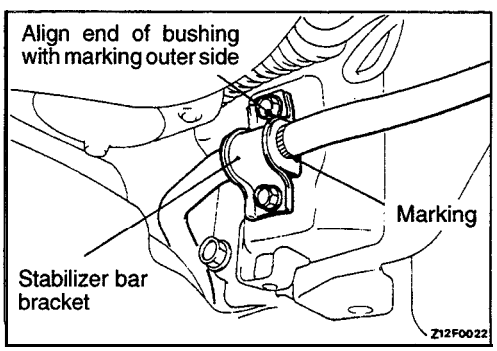

INSTALLATION SERVICE POINT

▶A◀ STABILIZER BAR BRACKET POSITIONING

(1) Align the bushing (LH) with the stabilizer bar marking end and temporarily tighten the stabilizer bar bracket (LH).
(2) In this condition, mount the stabilizer bar bracket (RH) and temporarily tighten it.
(3) Temporarily fix the both ends of the stabilizer bar to the link and tighten the stabilizer bar bracket mounting bolts to specification.

TSB Revision

INSPECTION

- Check the bushing for wear and deterioration.
- Check the stabilizer bar for deterioration or damage.
- Check the stabilizer link ball joint dust cover for cracks.
- Check all bolts for condition and straightness.

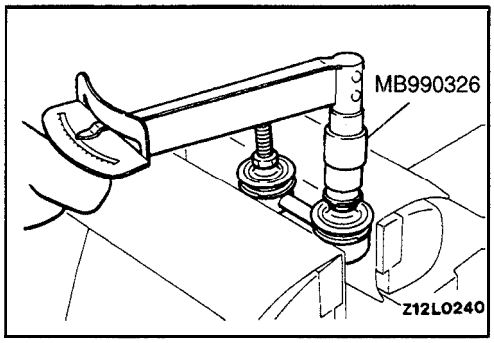

CHECKING STABILIZER LINK BALL JOINT BREAKAWAY TORQUE

Install the nut to each stud. Then use the special tool to measure the ball joint breakaway. torque.

Standard value: 1.7-3.2 Nm (15-28 in.lbs.)

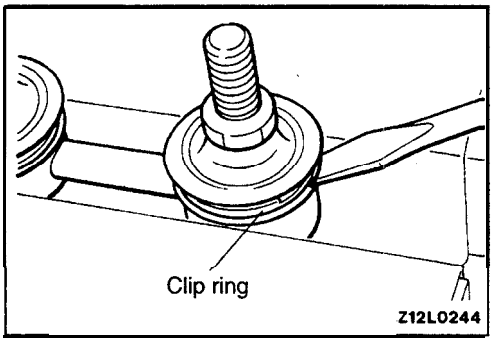

BALL JOINT DUST SHIELD REPLACEMENT

(1) Remove the clip ring and the dust shield.

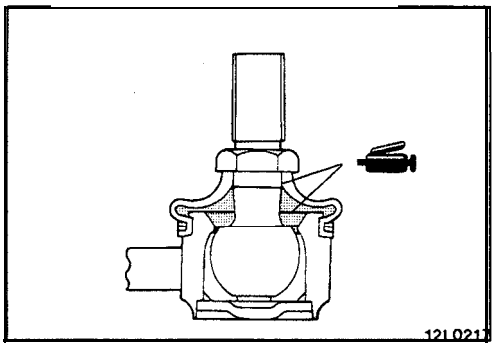

(2) Apply multipurpose grease to the lip and inside of the dust shield.

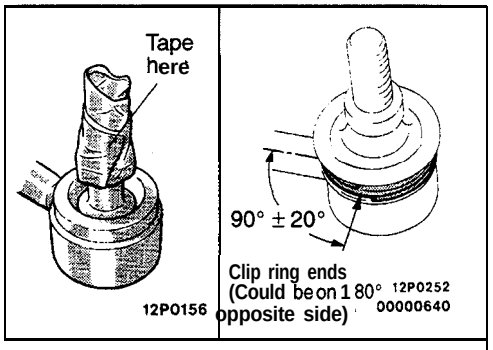

(3) Use vinyl tape to tape the stabilizer link where shown in the illustration, and then install the dust shield to the stabilizer link.

(4) Secure the dust shield by the clip link.
At this time, make sure that the clip ring ends are located at a point 90° ± 20° with reference to the link axis.

NOTES

ELECTRONIC CONTROL SUSPENSION (ECS)

CONTENTS

DAMPING FORCE CHANGEOVER ACTUATOR 19

ECS CONTROL UNIT 20

ECS INDICATOR LIGHT 19

ECS SWITCH 18

G SENSOR 18

POSITION DETECTION SWITCH 19

SERVICE ADJUSTMENT PROCEDURES.. . . 11

On-Vehicle Inspection 11

SPECIAL TOOLS 4

SPECIFICATIONS 2

General Specifications 2

Service Specifications 4

STEERING ANGULAR VELOCITY SENSOR* 18

STOP LIGHT SWITCH 19

THROTTLE POSITION SENSOR 19

TROUBLESHOOTING 5

VEHICLE SPEED, SENSOR 18

WARNINGS REGARDING SERVICING OF SUPPLEMENTAL RESTRAINT SYSTEM (SRS) EQUIPPED VEHICLES

WARNING!

(1) Improper service or maintenance of any component of the SRS, or any SRS-related component, can lead to personal injury or death to service personnel (from inadvertent firing of the air bag) or to the driver and passenger (from rendering the SRS inoperative).

(2) Service or maintenance of any SRS component or SRS-related component must be performed only at an authorized MITSUBISHI dealer.

(3) MITSUBISHI dealer personnel must thoroughly review this manual, and especially its GROUP 52B -Supplemental Restraint System (SRS) and GROUP 00 -Maintenance Service, before beginning any service or maintenance of any component of the SRS or any SRS-related component.

NOTE

The SRS includes the following components: impact sensors, SRS diagnosis unit, SRS warning light, air bag module, clock spring and interconnecting wiring. Other SRS-related components (that may have to be removed/installed in connection with SRS service or maintenance) are indicated in the table of contents by an asterisk (*).

SPECIFICATIONS

GENERAL SPECIFICATIONS

FRONT SUSPENSION

item	Specification
Suspension system	McPherson strut type

COIL SPRING (Hatchback)

<Up to 1993 models>

Items	FWD – M/T	FWD – A/T	AWD
Wire dia. × center dia. × free length mm (in.)	14.8 × 170 × 322.5 (.58 x 6.69 x 12.70)	15.0 × 170 × 331.0 (.59 x 6.69 x 13.03)	15.7 × 170 × 301.5 (.62 x 6.69 x 11.87)
Coil spring identification color	Orange × 1	Orange × 2	Blue × 1
Spring constant N/mm (lbs./in.)	30 (168)	30 (168)	39 (218)

<From 1994 models>

Items	FWD – M/T	FWD – A/T	AWD
Wire dia. x center dia. x free length mm (in.)	14.4 x 170 x 322.7 (.57 x 6.69 x 12.70)	14.5 x 170 x 329.3 (.57 x 6.69 x 12.96)	15.2 x 170 x 301.6 (.60 x 6.69 x 11.87)
Coil spring identification color	Green x 1	Green x 2	Brown x 1
Spring constant N/mm (lbs./in.)	29 (162)	29 (162)	38 (212)

COIL SPRING (Convertible)

Items	FWD	AWD
Wire dia. x O.D. x free length mm (in.)	14.7 x 170 x 338.0 (.58 x 6.69 ×13.31)	15.4 x 170 x 308.5 (.61 x 6.69 x 12.15)
Coil spring identification color	Orange x 1	Gray x 1
Spring constant N/mm (lbs./in.)	30 (168)	39 (218)

SHOCK ABSORBER

Items			Specifications
Type			Hydraulic, cylindrical double-acting type
Max. length mm (in.)			485 (19.1)
Min. length mm (in.)			335 (13.2)
Stroke mm (in.)			150 (5.9)
Damping force at 0.3 m/sec. (.9 ft.)/sec. N (lbs.)	Expansion	Hard	2,530 (558)
		Medium	1,580 (348)
		Soft	620 (137)
	Contraction	Hard	1,190 (262)
		Medium	1.120 (247)
		Soft	970 (214)

TSB Revision

STABILIZER BAR

Items	FWD	AWD
Mounting method	Pillow ball type	Pillow ball type
Outside dia. mm (in.)	22 (.86)	23 (.91)

REAR SUSPENSION

Items	FWD	AWD
Suspension system	Multi-link type	Double-wishbone type

COIL SPRING (Hatchback)

<Up to 1993 models>

Items	FWD	AWD
Wire dia. x center dia. x free length mm (in.)	12.2 x 105 x 350.0 (.48 x 4.13 x 13.78)	12.2 x 105 x 379.3 (.48 x 4.13 x 14.93)
Coil spring identification color	Orange x 1	Blue x 2
Spring constant N/mm (lbs./in.)	35 (196)	28 (157)

<From 1994 models>

Items	FWD	AWD
Wire dia. x center dia. x free length mm (in.)	11.6 x 105 x 350.0 (.46 x 4.13 x 13.78)	11.5x105x379.3 (.45 x 4.13 x 14.93)
Coil spring identification color	Green x 1	Brown x 1
Spring constant N/mm (lbs./in.)	34 (190)	28 (157)

COIL SPRING (Convertible)

Items	FWD	AWD
Wire dia. x center dia. x free length mm (in.)	12.0 x 105 x 366.5 (.47 x 4.13 x 14.43)	11.8 × 105 × 395.2 (.46 x 4.13 x 15.56)
Coil spring identification color	Blue x 1	Gray x 1
Spring constant N/mm (lbs./in.)	35 (196)	28 (157)

SHOCK ABSORBER

Items			FWD	AWD
Type			Hydraulic, cylindrical double-acting type	
Max. length mm (in.)			515 (20.3)	610 (24.0)
Min. length mm (in.)			356 (14.0)	407 (16.0)
Stroke mm (in.)			159 (6.3)	203 (8.0)
Damping force at 0.3 m/sec. (.9 ft.)/sec. N (lbs.)	Expansion	Hard	1,710 (377)	1,710 (377)
		Medium	1,160 (256)	1,160 (256)
		soft	560 (123)	560 (123)
	Contraction	Hard	1,010 (223)	1,010 (223)
		Medium	880 (194)	880 (194)
670		Soft(1	670 (148)	48)

TSB Revision

STABILIZER BAR

Items	FWD	AWD
Mounting method	Pillow ball type	Pillow ball type
Outside dia. mm (in.)	10 (.37)	22 (.86)

SERVICE SPECIFICATIONS

Items		Front suspension	Rear suspension – FWD	Rear suspension- AWD
Standard value	Camber	0" ± 30'	0" ± 30'	–0°10' ± 30'
	Caster	3°55' ± 30'	–	
	Toe-in mm (in.)	0 ± 3 (0 ± .12)	.5 ± 2.5 (.02 ± .1)	.5 ± 2.5 (.02 ± .1)

SPECIAL TOOLS

Tool	Tool number and name	Supersession	Application
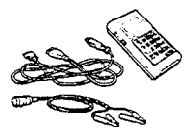	MB991341 Scan tool (multi-use tester <MUT>)	MB991341C	Up to 1993 models Inspection of electronic control suspension system • Reading and erasing diagnostic trouble codes • Reading service data • Actuator test
	ROM pack [For the number, refer to Group 00 – Precautions Before Service.]		
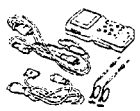 Z16X0606	MB991502 Scan tool (MUT-II)	MB991502	All models Inspection of electronic control suspension system • Reading and erasing diagnostic trouble codes • Reading service data • Actuator test
Z16X0607	ROM pack		
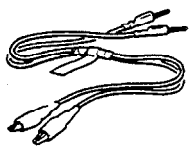	MB991529 Diagnostic trouble code check harness	MB991529	From 1994 models Electronic control system inspection using a voltmeter

TROUBLESHOOTING

QUICK REFERENCE CHART FOR TROUBLESHOOTING

Symptoms	Associated components	Pages to refer to
When diagnostic trouble code No. 11 is output. *1	G sensor *1	P.33B-6
	ECS control unit	
When diagnostic trouble code No. 21 is output. *2	Steering angular velocity sensor *2	P.33B-6
	ECS control unit	
When diagnostic trouble code No. 24 is output. *3	Vehicles speed sensor *3	P.33B-7
	ECS control unit	
When diagnostic trouble code Nos. 61 through 64 are output.	Position detection switch	P.33B-8
	Damping force changeover actuator	
	ECS control unit	
ECS indicator light does not switch when ECS switch is operated.	ECS switch	P.33B-9
	ECS indicator light	
	ECS control unit	
Anti-roll control only stops. *2	Steering angular velocity sensor *2	P.33B-6
	ECS control unit	
Anti-dive control only stops.	Stop light switch	P.33B-9
	ECS control unit	
Anti-squat control only stops. *4	Throttle position sensor *4	P.33B-10
	ECS control unit	

TROUBLESHOOTING HINTS

*1. The G sensor is a sensor associated with ride control (detecting pitching, bouncing and rough road). If it fails, therefore, ride control stops.

*2. A self diagnostic decision on the steering angular velocity sensor is made by the ECS control unit which internally detects the voltages of the two sensor output lines connected to the ECS control unit to detect an open circuit in the signal line. When the signal line is short-circuited or when the power line is open-circuited, however, it cannot be detected. In a situation where anti-roll control only stops, if diagnostic trouble code No. 21 is not on display, a short-circuited sensor output line or open-circuited sensor power line is suspected.

*3. The vehicle speed sensor is a sensor associated with attitude controls (anti-dive, anti-squat) and steering stability controls (anti-roll, high speed sensitive controls). If all these controls stop, therefore, trouble in the sensor is suspected. The vehicle speed sensor is also in use for operation of the speedometer and for the other electronics controlled systems for the engine, automatic transaxle, etc.

*4. The sensor associated with anti-squat control is the throttle position sensor. The sensor is also used for control of the engine and automatic transaxle. If the sensor fails, therefore, the check engine/malfunction indicator lamp in the combination meter will light, and engine diagnostic trouble code No. 14 will be output. In a situation where anti-squat control only stops, therefore, if the check engine/malfunction indicator lamp does not light, defective wiring is suspected between the ECS control unit and throttle position sensor.

1 When diagnostic trouble code No. 11 is output

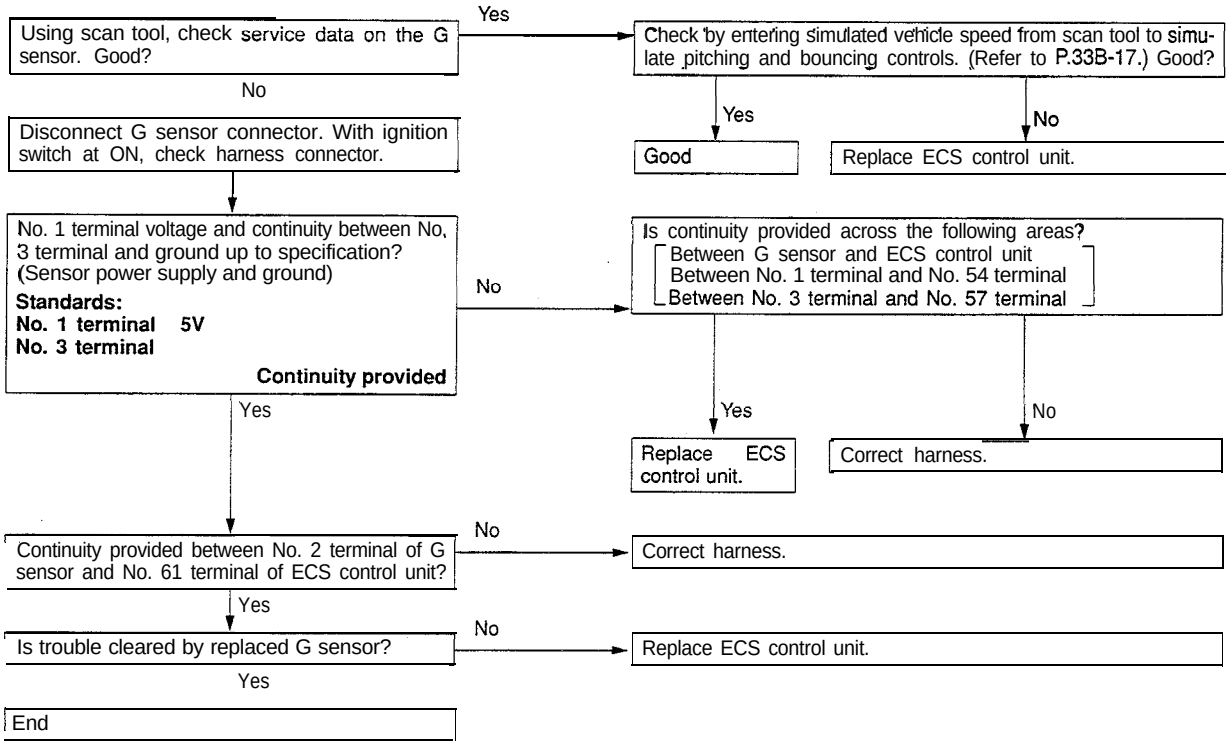

2 When diagnostic trouble code No. 21 is output, or when anti-roll control only stops.

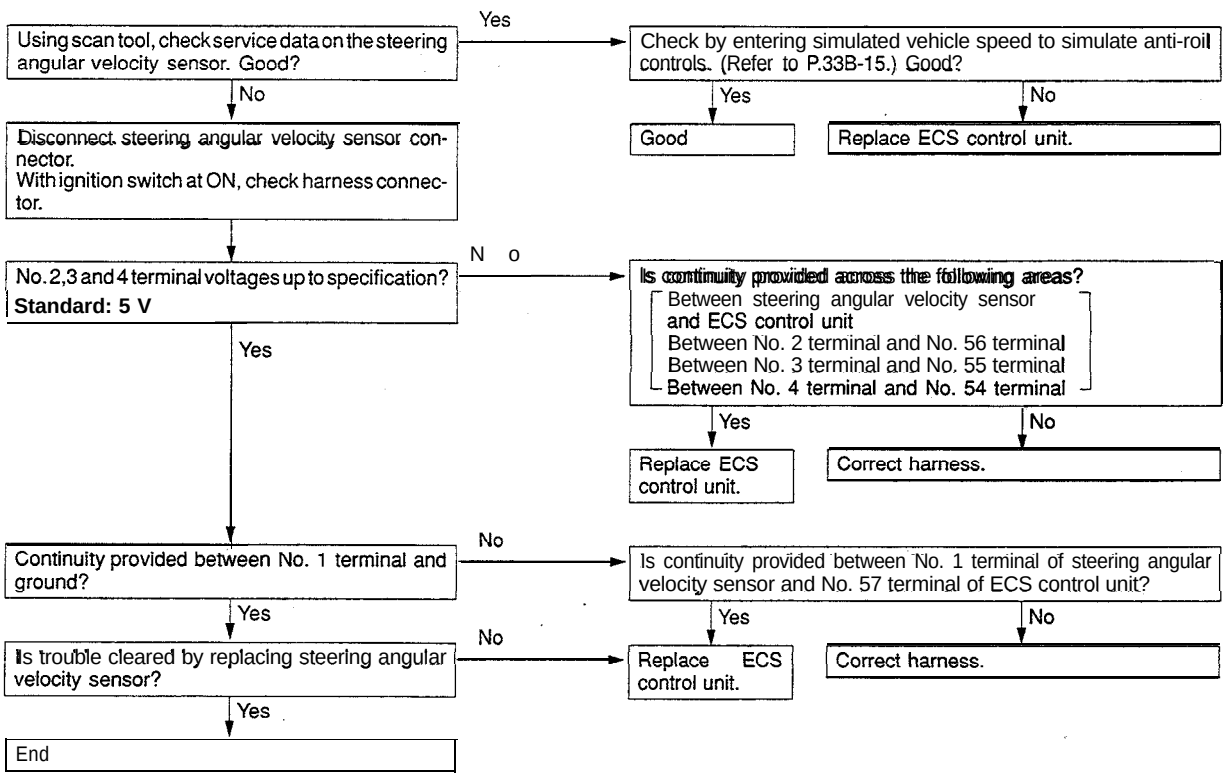

3 When diagnostic trouble code No. 24 is output

<Turbo>

Using scan tool, check service data on vehicle speed sensor. Good?
- Yes → Check by entering simulated vehicle speed from scan tool to simulate high speed-sensitive control. (Refer to P.33B-16.) Good?
  - Yes → Good
  - No → Replace ECS control unit.
- No ↓

Disconnect vehicle speed sensor connector and check harness connector.

↓

No. 1 terminal voltage and continuity between No. 2 terminal and ground up to specification? (Sensor power supply and ground)

Standards:

No. 1 terminal	**Battery voltage**
No. 2 terminal	**Continuity provided**

- No → Correct harness (between No. 1 terminal of vehicle speed sensor and battery and between No. 2 terminal of vehicle speed sensor and ground).
- Yes ↓

Is continuity provided between No. 3 terminal of vehicle speed sensor and No. 53 terminal of ECS control unit?
- No →
- Yes ↓

Check vehicle speed sensor. (Refer to P.33B-18.) Good?
- No → Replace vehicle speed sensor.
- Yes ↓

Replace ECS control unit.

<Non-Turbo>

Using scan tool, check service data on vehicle speed sensor.
- Yes → Check by entering simulated vehicle speed from scan tool to simulate high speed-sensitive control. (Refer to P.33B-16.) Good?
- No ↓

Is continuity provided between No. 109 terminal of combination meter and No. 53 terminal of ECS control unit?
- No → Correct harness.
- Yes ↓

Is continuity provided between No. 64 terminal of combination meter and ground?
- No → Correct harness.

Replace vehicle speed sensor.

Replace ECS control unit.

5 ECS indicator light does not switch when ECS switch is operated.

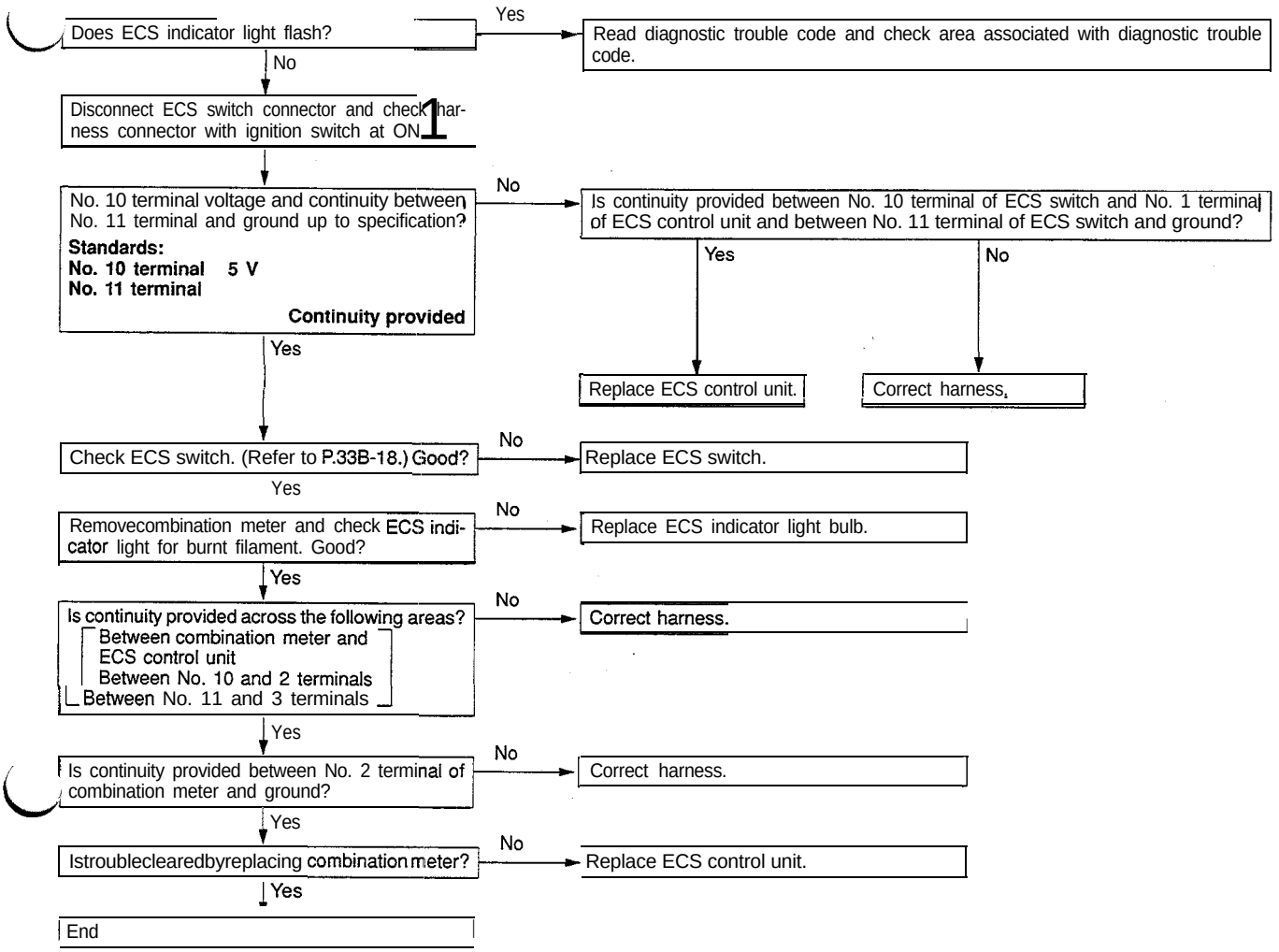

6 Anti-dive control only stops.

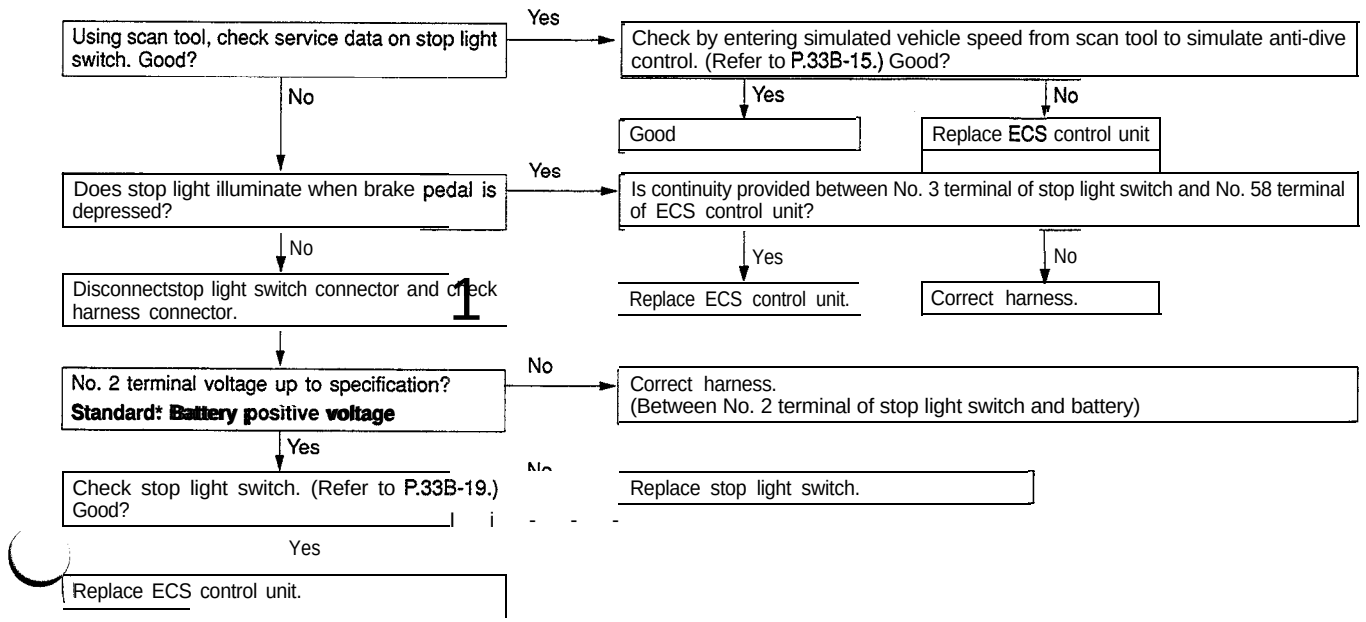

7 Anti-squat control only stops.

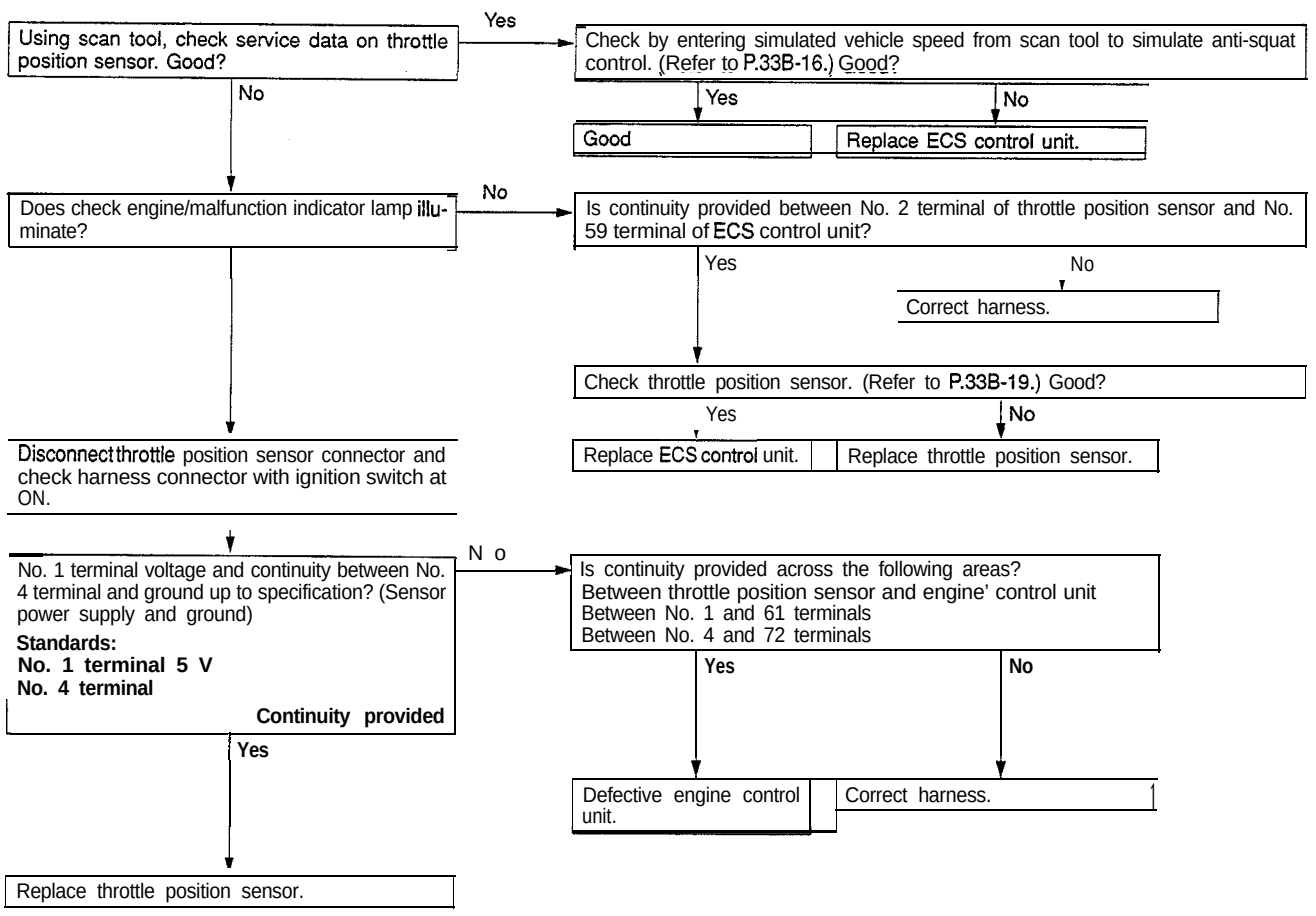

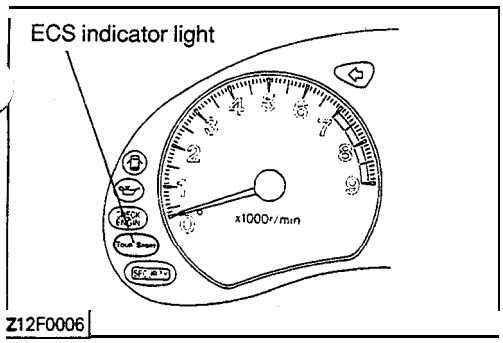

SERVICE ADJUSTMENT PROCEDURES

ON-VEHICLE INSPECTION

1. WARNING INDICATION BY ECS INDICATOR LIGHT

If a problem associated with the following items occurs, the ECS indicator light (Tour Sport) in the combination light flashes at intervals of 0.5 sec. At the same time, the diagnostic trouble code associated with the problem is output to the data link connector.

Warning Indication Items

- G sensor
- Steering angular velocity sensor
- Vehicle speed sensor
- Damping force changeover actuator (including position detection switch)

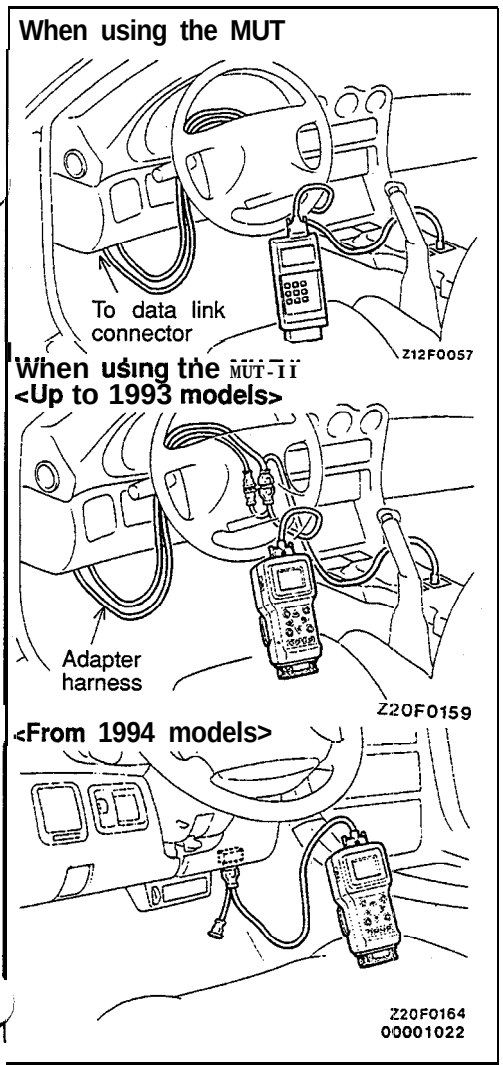

2. ON-BOARD DIAGNOSTIC OUTPUT CHECK

When using the scan tool [multi-use tester (MUT) <Up to 1993 models> or MUT-II <all models>]

(1) Connect scan tool to the data link connector.
When connecting the scan tool (MUT-II) to a vehicle up to 1993 model, use the adapter harness supplied together with the scan tool.

Caution
Turn off the ignition switch beforehand whenever the scan tool is connected or disconnected.

(2) Check the diagnostic trouble code.
(3) After the defective portion has been repaired, erase the diagnostic trouble code. (If the defective portion is not completely repaired, it may be impossible to erase the diagnostic trouble code by the scan tool.)
(4) Perform on-board diagnostic output check again and check that the diagnostic trouble code is good.

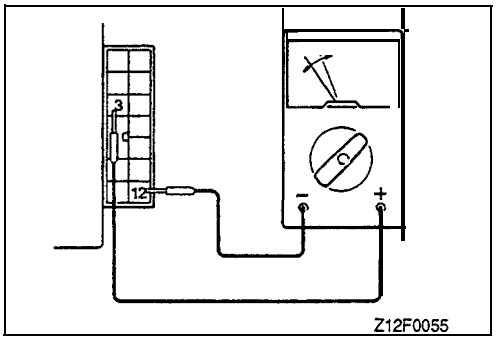

When using the voltmeter <Up to 1993 models>

(1) Set the ignition switch to OFF.
(2) Connect the positive (+) terminal of the voltmeter to the No. 3 terminal of the data link connector beside the junction block and connect the negative (–) terminal of the voltmeter to the No. 12 terminal.
(3) Set the ignition switch to ON.
(4) Read the diagnostic trouble code on the basis of the deflection of the pointer of the voltmeter.
(5) Based on the diagnostic trouble code, repair the associated defective portion.
(6) Set the ignition switch to OFF.
(7) Disconnect the battery cables from the battery terminals and reconnect them more than 10 seconds thereafter.
(8) Set the ignition switch to ON, perform on-board diagnostic check again, and check that the diagnostic trouble code is good.

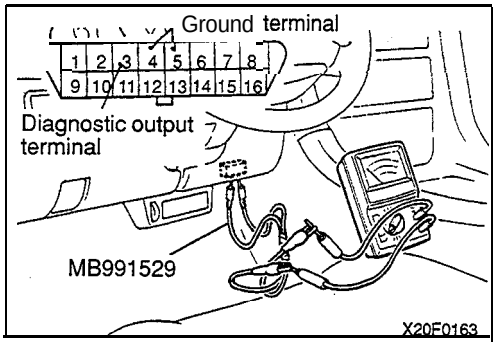

<From 1994 models>

Connect a voltmeter to the diagnostic output terminal and ground terminal of the data link connector using the special tool. Observe the pointer deflection to read out the diagnostic trouble code.

Fail Safe and Diagnosis List

output Code No.	Output Code indication Pattern	Diagnostic Item	Fail Safe
0		[Good]	[Good]
11		G sensor defective*	• Ride controls (pinching and bouncing control, bad road detection control) stop.
21		Steering angular velocity sensor open-circuited*	• Anti-roll control stops.
24		Vehicle speed sensor open-circuited*	• Steering stability controls (anti-roil, high speed sensitive controls) and attitude controls (anti-dive, anti-squat) stop. • Shock absorber damping force fixed at MEDIUM
61		F.R. damping force changeover actuator defective	• All ECS controls stop. • Normal shock absorber damping force fixed at HARD.
62		F. L. damping force changeover actuator defective	
63		R. R. damping force changeover actuator defective	
64		R.L. damping force changeover actuator defective	

NOTE

(1) Control stop, warning indication and fixed damping force return to normal when the ignition switch is set to OFF.
When any of the problems marked * occurs, if no subsequent problem occurs (for example, when the problem is transient), normal operation will be restored even if the ignition switch is not set to OFF.

(2) Even if control stop, warning indication and fixed damping force return to normal as described above, the diagnostic trouble code is stored in the memory in the ECS control unit.

(3) The diagnostic trouble code can be force-cleared by use of the scan tool or by stopping the power supply to the ECS control unit. In addition, it is automatically cleared if the ON/OFF control of the ignition switch is repeated 60 times after the diagnostic trouble code has been output, provided that no new diagnostic trouble code is output during the period.

On-board Diagnostic Determination Conditions

Code No.	What is Defective	On-board Diagnostic Determination Conditions
11	G sensor defective	When sensor input of 0.5 or less or 4.5 V or more lasts for more than 10 seconds.
21	Steering angular velocity sensor open-circuited	Open circuit detected on the basis of difference in voltage level of sensor signal.
24	Vehicle speed sensor defective	When throttle opening of 30% (1.5 V) or more lasts for more than 60 seconds with the ignition switch at ON and if there is no input from the vehicle speed sensor during the period, it is regarded as a problem.
61-64	Damping force changeover actuator defective	If no damping force changeover is made in a second afteractuatordrive signal has been output (position detection switch output pattern does not change to that of target damping force), it is regarded as a problem.

3. SERVICE DATA OUTPUT CHECK'

Using the scan tool, check the service data.

Service Data Inspection List

Item No.	Check Point	Check Condition	Soundness Determination Value				
11	G sensor	Vehicle in stationary condition	2.0–3.0 V				
		Shake vehicle up and down	Indicated value increases or decreases from 2.5 V				
14	Throttle position sensor	Throttle fully closed	300–1,000 mV				
		(Slowly depress accelerator pedal.)	Smoothly increases.				
		Throttle fully opened	4,500–5,500 mV				
21	Steering angular velocity sensor	Slowly turn steering wheel counterclockwise and check if ST1 and ST2 change as shown at right column.	ST1	ON	ON	OFF	OFF
			ST2	ON	OFF	OFF	ON
		Slowly turn steering wheel clockwise and check if ST1 and ST2 change as shown at right column.	ST1	ON	OFF	OFF	ON
			ST2	ON	ON	OFF	OFF
24	Vehicle speed sensor	Check by actually operating vehicle.	Speedometer indication and scan tool indication coincide.				
26	Stop light switch	Depress brake pedal.	ON				
		Do not depress brake pedal.	OFF				
61	F.R. actuator	Tour mode with vehicle stationary	SOFT				
		Sport mode with vehicle stationary	HARD				
62	F.L. actuator	Tour mode with vehicle stationary	SOFT				
		Sport mode with vehicle stationary	HARD				
63	R.R. actuator	Tour mode with vehicle stationary	SOFT				
		Sport mode with vehicle stationary	HARD				
64	R.L. actuator	Tour mode with vehicle stationary	SOFT				
		Sport mode with vehicle stationary	HARD				

TSB Revision

4. ACTUATOR CHECK

(1) Using the scan tool, force-drive the actuator and fix the damping force changeover.
(2) Check service data (Item No. 61 through 64) to verify that the actuator has been force-driven.

NOTE
- All of the four actuators in the shock absorbers are simultaneously changed over by forced drive.
- The damping force changed over and fixed by forced drive is cleared by the following three conditions.
  1. Ignition switch OFF
  2. Vehicle speed 3 km/h (1.9 mph) or more
  3. Scan tool disconnected

Actuator Check List

Item No.	Check Point	Check Condition	Scan Tool Service Data Item No. 61-64 Indicated
01	Damping force SOFT	Vehicle in stationary condition	SOFT
03	Damping force MEDIUM		MEDIUM
04	Damping force HARD		HARD

5. CONTROL FUNCTION SIMULATION CHECK 110004356

Using the scan tool, check all control functions during operation with the vehicle in stationary condition.

5-1. Anti-Roll Control Function Check

(1) Raise the front wheels on a jack and have them supported by rigid racks.
(2) Place the steering wheel in straight ahead position.
(3) Select the Tour mode by the ECS switch.
(4) Enter a simulated vehicle speed of 100 km/h (62 mph) from the scan tool.
(5) Using the scan tool, check the indications of service data items No. 61 through 64.

Scan tool indication: SOFT

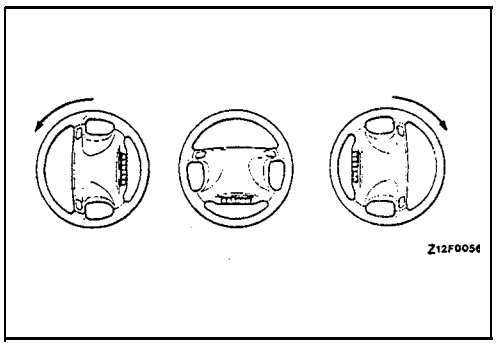

(6) Turn the steering wheel clockwise or counterclockwise from the straight ahead position.
(7) Using the scan tool, check that the indications of service data items No. 61 through 64 change over.

Steering turning speed	Scan tool indication
Approx. 0.3 seconds for 90° rotation	MEDIUM
Approx. 0.2 seconds for 90° rotation	HARD

(8) Check that the original damping force indication (SOFT) is restored a second later.

5-2. Anti-Dive Control Function Check

(1) Select the Tour mode by the ECS switch.
(2) Enter a simulated vehicle speed of 100 km/h (62 mph) from the scan tool.
(3) Using the scan tool, check the indications of service data items No. 61 through 64.

Scan tool indication: SOFT

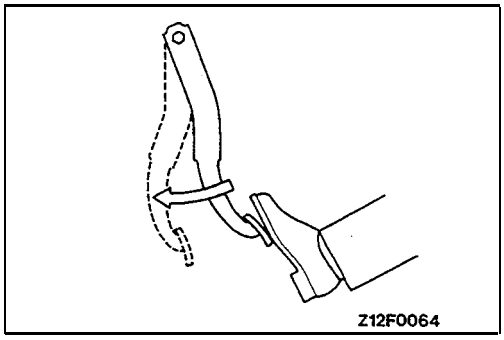

(4) Depress the brake pedal and simultaneously change the entered simulated vehicle speed by the scan tool. (Change the speed in 0.4 seconds after depressing the brake pedal.)
(5) Using the scan tool, check that the indications of service data items No. 61 through 64 change over.

Changing entered simulated vehicle speed	Scan tool indication
100 km/h (62 mph) to 80 km/h (50 mph)	HARD

(6) Check that the original damping force indication (SOFT) is restored a second later.

5-3. Anti-Squat Control Function Check

(1) Select the Tour mode by the ECS switch.
(2) Enter a simulated vehicle speed of 30 km/h (19 mph) from the scan tool.
(3) Using the scan tool, check the indications of service data items No. 61 through 64.

Scan tool indication: SOFT

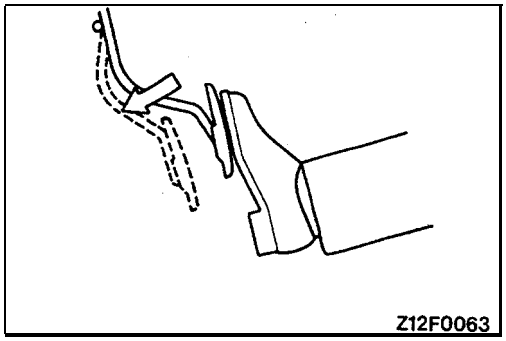

(4) Check that when the accelerator pedal is operated, the indications of service data items No. 61 through 64 on the scan tool change as shown in the following table.
(5) With the simulated vehicle speed at 60 km/h (37 mph) and 90 km/h (56 mph), similarly operate the accelerator pedal and check that the scan tool indications change over.

Entered simulated vehicle speed	Accelerator operating condition	
km/h (mph)	Quickly depress	A second later with pedal deoressed
30 (19)	HARD	MEDIUM
60 (37)	MEDIUM	MEDIUM
90 (56)	SOFT	MEDIUM

(6) Check that when the accelerator pedal is released, the original damping force (SOFT) is restored in less than a second.

5-4. High Speed Sensitive Control Function Check

(1) Select the Tour mode by the ECS switch.
(2) Check that when the entered simulated vehicle speed is changed by the scan tool, the indications of service data items No. 61 through 64 change.
(If the simulated vehicle speed is continuously changed by the fixed function keys of the scan tool, however, the indications of service data items No. 61 through 64 do not change during the period the fixed function key is pressed.)

Changing entered simulated vehicle speed	Scan tool indication
Acceleration 129 km/h (80 mph) to 130 km/h (81 mph)	SOFT → MEDIUM
Deceleration 120 km/h (75 mph) to 119 km/h (74 mph)	MEDIUM → SOFT

5-5. Pitching and Bouncing Control Function Check

(1) Select the Tour mode by the ECS switch.
(2) Using the scan tool, check the indications of service data items No. 61 through 64.

Scan tool indication: SOFT

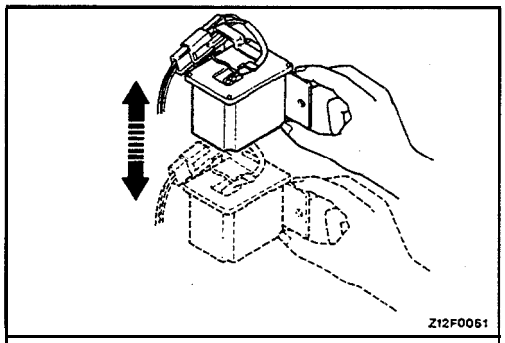

(3) Remove the G sensor, slowly shake it up and down through a space of about 5 cm (1.9 in.) with the connector connected, and check that the indications of service data items No. 61 through 64 change.

G sensor status	Scan tool indication
Shake up and down at a speed of a round trip in a second.	HARD

(4) Check that when the G sensor is held stationary, the original damping force indication (SOFT) is restored.

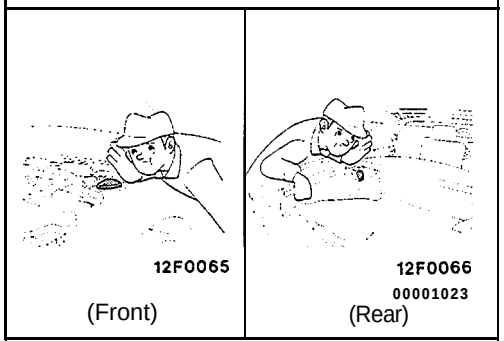

6. ACTUATOR OPERATION CHECK

6-1. Actuator Operating Sound Check

(1) Set the ignition switch to ON.
(2) Bring your ear near the top of the shock absorber.

NOTE
In the case of the rear shock absorbers, remove the trim cover at the top of the shock absorber before bringing your ear near the shock absorber.

(3) Check that the operating sound of the actuator in the shock absorber can be heard each time the control modes are changed by pressing the ECS switch.

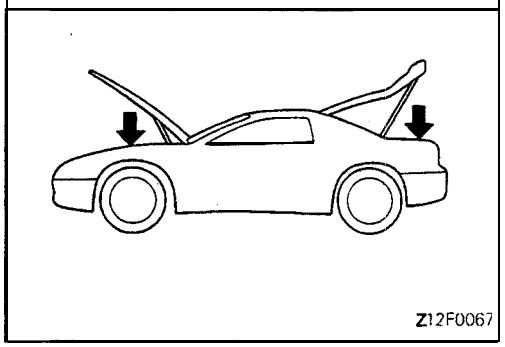

6-2. Damping Force Check

(1) Set the ignition switch to ON.
(ECS indicator Tour ON, damping force SOFT)
(2) Check the damping force SOFT state by shaking the top mounting points of the front shock absorbers or the top of the rear end panels of the rear shock absorbers up and down.
(3) Press the ECS switch to change the control mode to sport.
(ECS indicator Sport ON, damping force HARD).
(4) Shake the vehicle up and down to check that the damping force is harder than in the SOFT state.

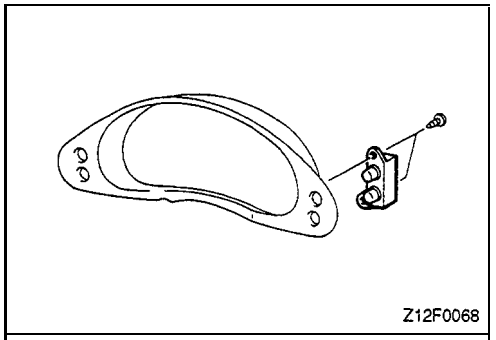
Z12F0068

ECS SWITCH

To mount or remove the ECS switch, refer to GROUP 54 – Meters and Gauges. Remove the meter bezel before mounting or removing the ECS switch.

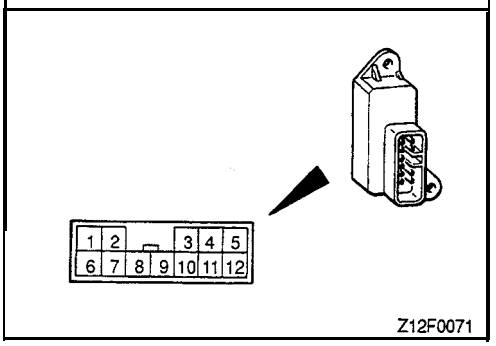

Z12F0071

INSPECTION

Operate the switch to check for continuity between the individual terminals.

Switch position		Terminal No.			
		3	4	10	11
ECS switch	ON	0—0		0—0	
	OFF	0—0			

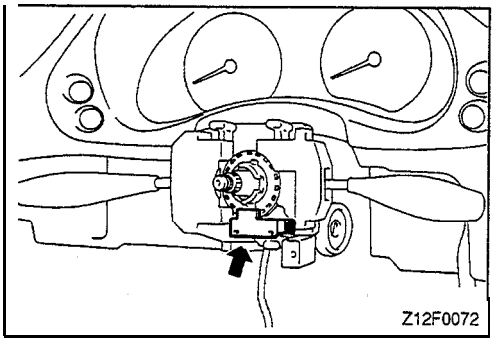
Z12F0072

STEERING ANGULAR VELOCITY SENSOR

To mount or remove the steering angular velocity sensor, refer to GROUP 54 – Column Switch. Remove the Steering wheel and clock spring before mounting or removing the sensor.

CAUTION: SRS
Before removal of air bag module, refer to GROUP 52B – Service Precautions and Air Bag Module and Clock Spring.

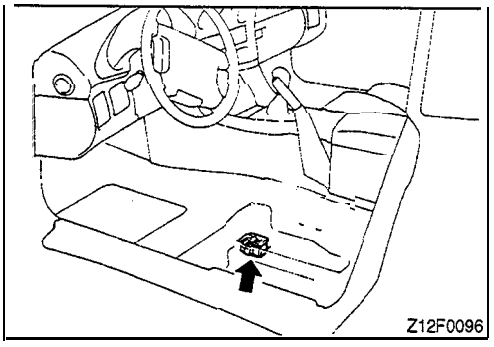
Z12F0096

G SENSOR

To mount or remove the G sensor, refer to GROUP 52A – Front Seat. Remove the front seat (L.H.) before removing or mounting the sensor.

VEHICLE SPEED SENSOR

To mount or remove the vehicle speed sensor, refer to GROUP 54 – Meters and Gauges.

INSPECTION

Refer to GROUP 54 – Meters and Gauges.

THROTTLE POSITION SENSOR

INSPECTION AND ADJUSTMENT

Refer to GROUP 13A – Fuel System.

STOP LIGHT SWITCH

To remove or mount the stoplight switch, refer to GROUP 35 – Brake Pedal.

INSPECTION

Refer to GROUP 35 – Brake Pedal.

POSITION DETECTION SWITCH and DAMPING FORCE CHANGEOVER ACTUATOR

To remove or mount the position detection switch and damping force changeover actuator, refer to GROUP 33A – Strut Assembly and GROUP 34 – Shock Absorber Assembly.

Caution

The position detection switch and damping force changeover actuator are built into the shock absorber assemblies of front and rear suspensions. Since they are of the non-disassembly type, remove or mount them in the form of a strut assembly or shock absorber assembly.

ECS INDICATOR LIGHT

To remove or mount the ECS indicator lights, refer to GROUP 54 – Meters and Gauges.

ECS CONTROL UNIT

REMOVAL AND INSTALLATION

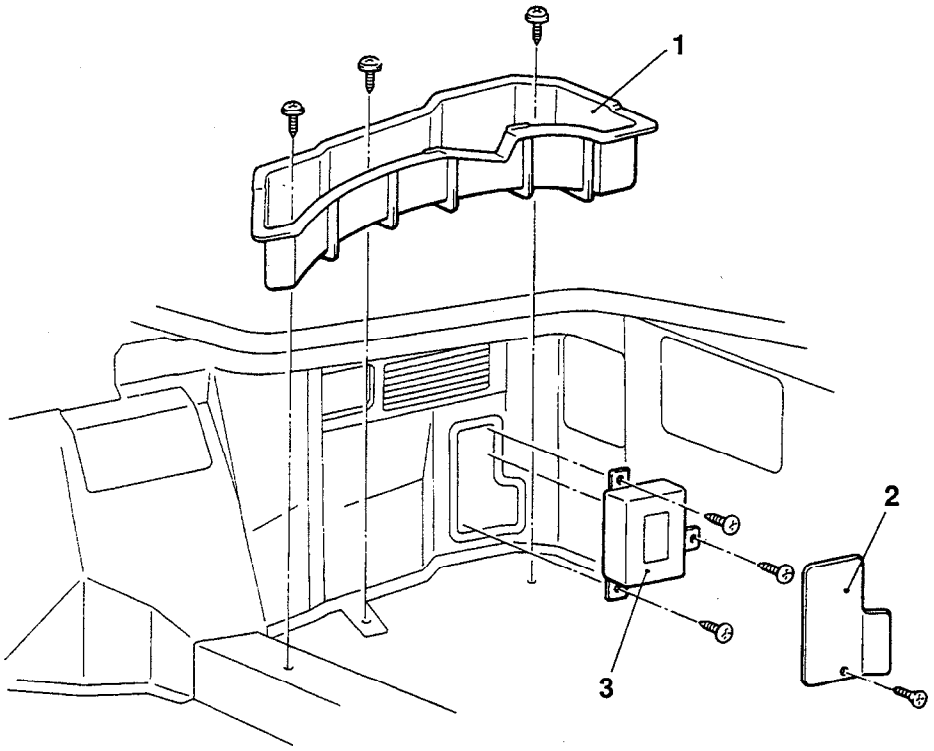

Z12F0098

Removal steps

1. Cargo floor box (R.H.)
2. Lid
3. ECS control unit