CIRCUIT DIAGRAMS

CONTENTS

Active Aero Circuit 428
Active Exhaust System Circuit 370
Anti-lock Braking System (ABS) Circuit 322
Auto-cruise Control Circuit 380
Back-up Light 54-85
Buzzer Circuit 208
Car Telephone Circuit 435
Central Door Locking Circuit 222
Charging System 16-3
Cigarette Lighter Circuit 54-120
Cooling Circuit 176
Defogger Circuit 54-193
Dome Light, Foot Light and Ignition Key Cylinder Illumination Light 54-72
Door Light and Luggage Compartment Light 54-81
ELC-4 A/T Circuit 186
Electronic Control Suspension (ECS) Circuit . . 352
Fog Light Circuit 54-58
Full Auto Air Conditioning' Circuit 272
Glove Box Light, Vanity Mirror Light and Inspection Light Circuit 54-84
Headlight 54-40
Heater Circuit ..... ,239
Horn 54-116
How to Read Circuit Diagrams 62
Ignition System 16-32
Manual Air Conditioning Circuit 242
Meter and Gauges Circuit 54-12
MFI Circuit 84
Power Distribution Circuit 68
Power Seat Circuit 416
Power Window Circuit 212
Radio and Tape Player 54-124
Rear. Wiper and Washer Circuit 318
Remote Controlled Mirror Circuit 320
Starting System 16-20
Stop Light 54-98
Sunroof Circuit 442
Supplemental Restraint System (SRS) Circuit 374
Taillight, Parking/Side Marker Light and License Plate Light Circuit 54-64
Tension-reducer Type Seat Belt Circuit 423
Theft-alarm System 54-206
Top Stack Circuit 438
Turn-signal Light and Hazard Light 54-90
Windshield Wiper and Washer Circuit 316

HOW TO READ CIRCUIT DIAGRAMS

The circuit of each system from the fuse (or fusible link) to ground is shown. The power supply is shown at the top and the ground at the bottom to facilitate understanding of how the current flows.

Indicates connector No. The same No. as in the wiring harness diagram is used. Connector numbers enclosed by frame are indicated with the connector symbols at the lower part of the page. Connector numbers not enclosed by frame are indicated without connector symbol.

Indicates the circuit name to be connected. The arrow indicates the current flow direction.

Indicates power take out.

Indicates harness junction point No. for another system. It corresponds to the junction point No. indicated on the destination system circuit diagram.

Indicates the circuit name to be connected. The arrow indicates the current flow direction.

Indicates the powersupply in the control unit. If no voltage is displayed, this indicates battery positive voltage.

An "X" at the end of a connector No. indicates that the connector is connected to a centralized junction that is shown in the section "Centralized Junction".

Indicates the operating conditions of the engine coolant switch, etc.

Indicates that the diagram continues at A in the same circuit.

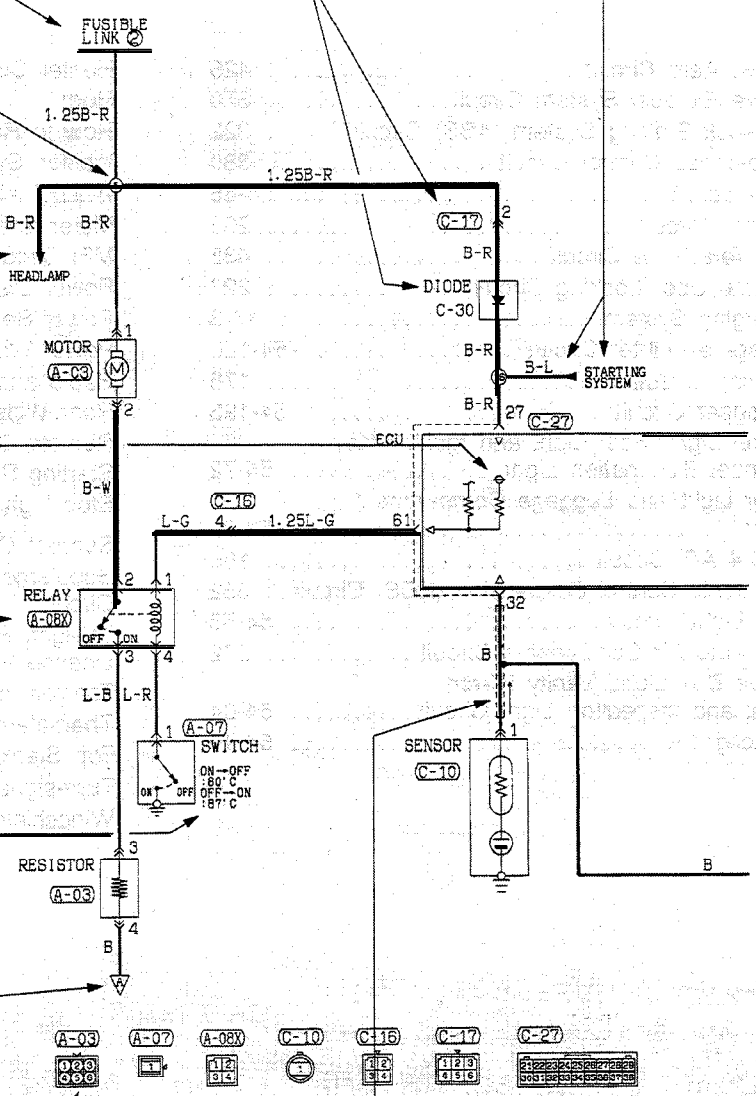

Indicates the connector symbol. Connectors in the circuit diagram are indicated in numerical order.

Indicates shield wire.

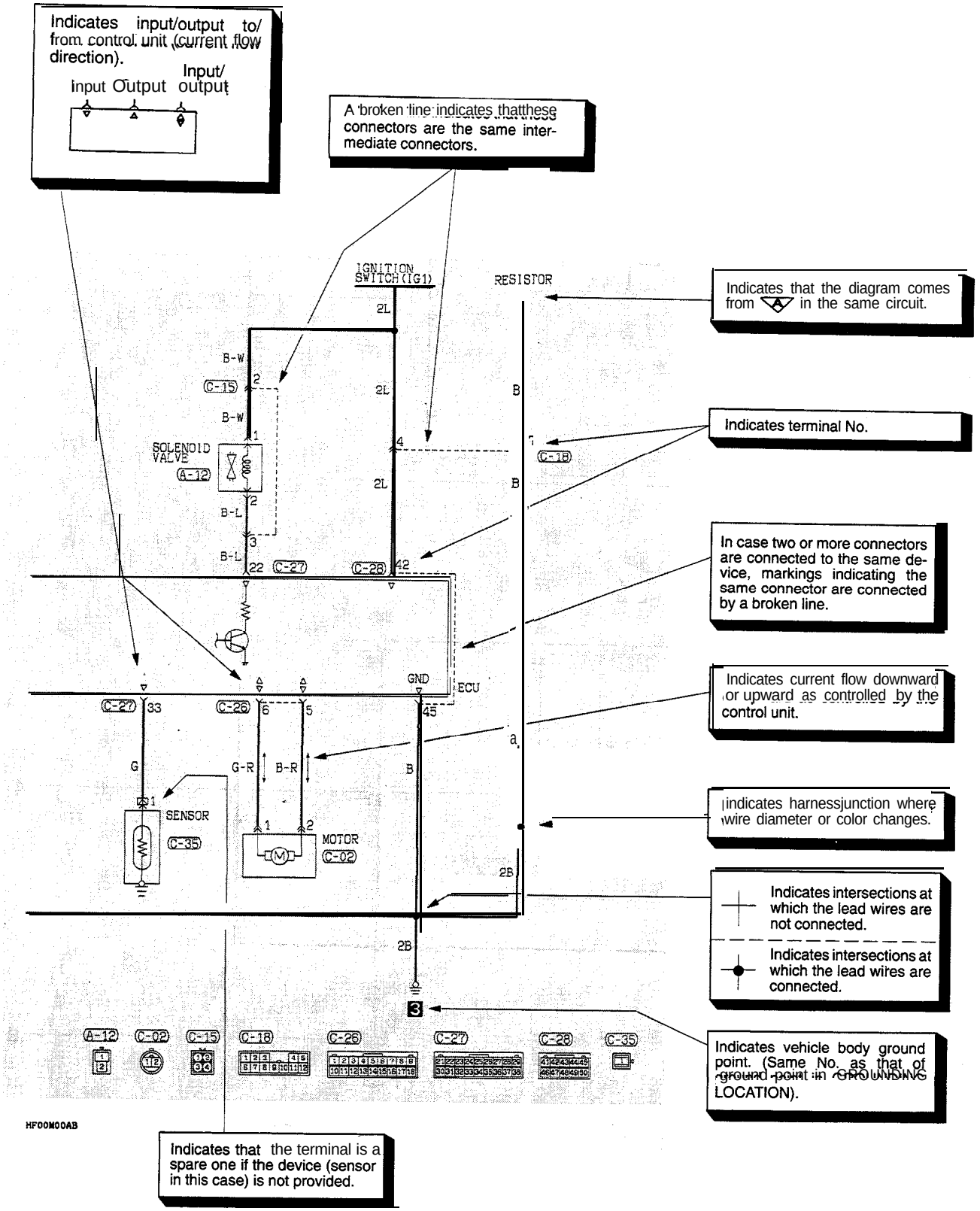
Indicates input/output to/from control unit (current flow direction).
Input
Output
Input/output
A broken line indicates that these connectors are the same intermediate connectors.
IGNITION SWITCH (IG1)
RESISTOR
Indicates that the diagram comes from A in the same circuit.
Indicates terminal No.
SOLENOID VALVE
A-12
C-15
C-18
C-27
C-28
In case two or more connectors are connected to the same device, markings indicating the same connector are connected by a broken line.
GND
ECU
C-26
Indicates current flow downward or upward as controlled by the control unit.
SENSOR
C-35
MOTOR
C-02
Indicates harnessjunction where wire diameter or color changes.
Indicates intersections at which the lead wires are not connected.
Indicates intersections at which the lead wires are connected.
Indicates vehicle body ground point. (Same No. as that of ground point in GROUNDING LOCATION).
HF00M00AB
Indicates that the terminal is a spare one if the device (sensor in this case) is not provided.

CONNECTOR / GROUNDING INDICATIONS

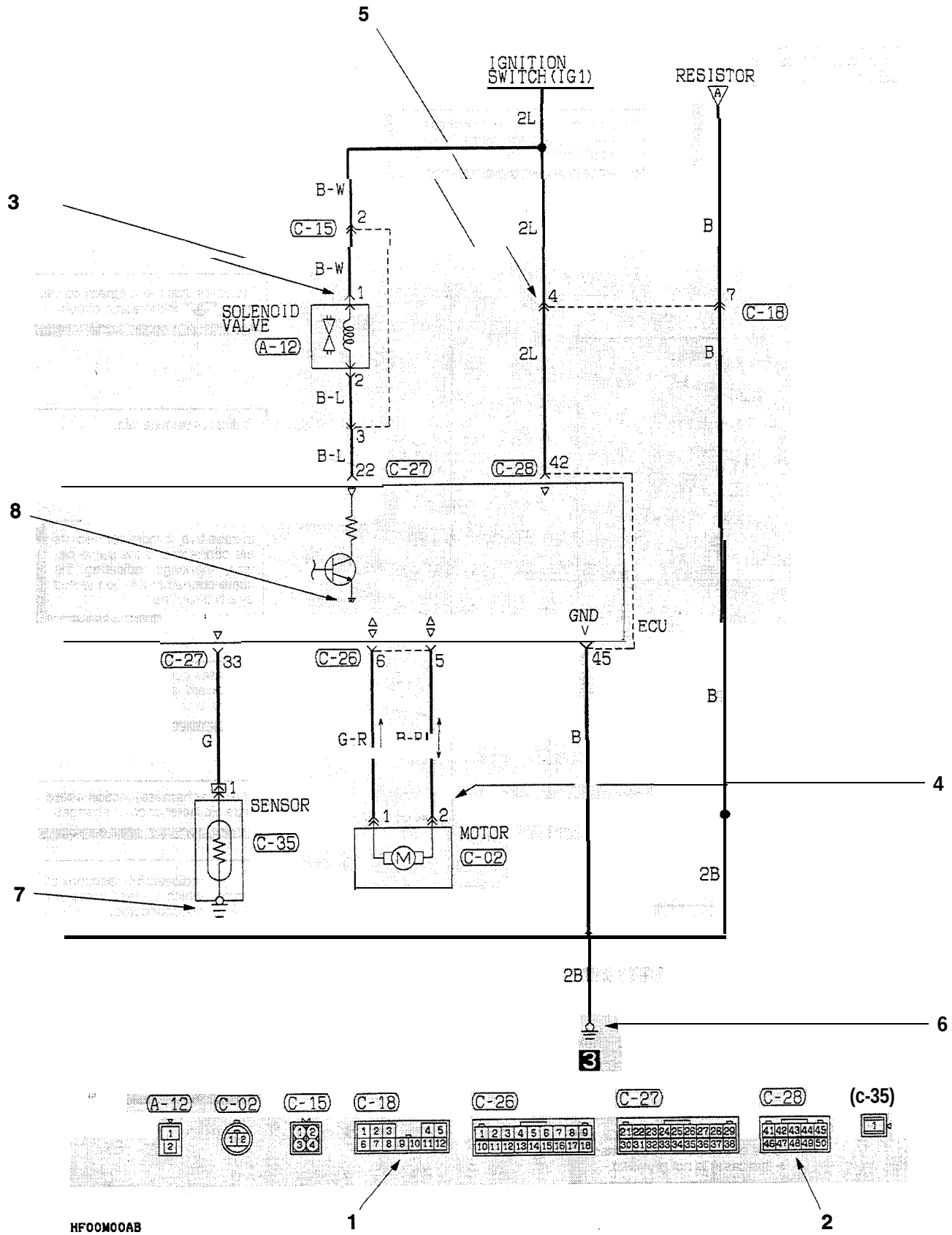

HF00M00AB

TSB Revision

Item	No.	Connector / Grounding	Symbol	Contents
Connector and terminal marking	1	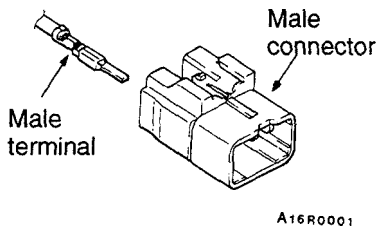	Male terminal Male connector	For the terminal symbols, the connected terminal is indicated as the male terminal, and the receptacle terminal is indicated as the female terminal as shown in the illustration. The connector in which the male terminal is assembles is indicated as the male connector and the connector in which the female is assembled is indicated as the female connector. The connector symbols shown the male connector with a double outer contour line and the female connector with a single outer contour line.
		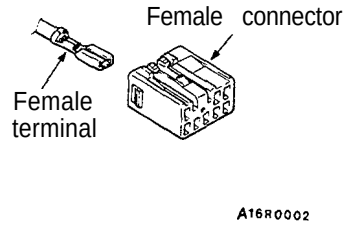	Female terminal Female connector	
Connector symbol marking	2	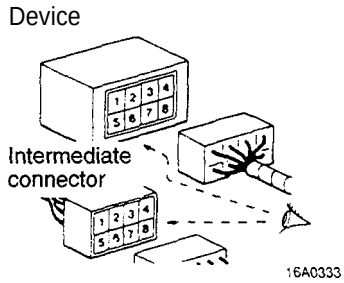		The symbol indicates the connector as viewed from the illustrated direction. At the connection with a device, the connector symbol on the device side is shown, and for an intermediate connector, the male connector symbol is shown For the connectors which are not connected to any appliance (spare terminal, terminal for inspection), the connectors at the harness side are shown.
Connector connection marking	3	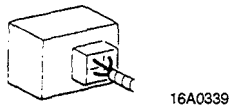		A connection between a device and connector on the harness side is either by direct insertion in the device (direct connection type) or by connection with a harness connector furnished on the device side (harness connection type). The two types are indicated as illustrated.
	4	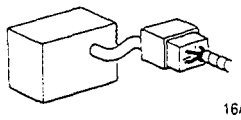		
	5	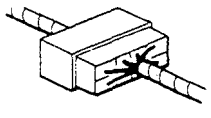		

Item	No.	Connector / Grounding	Symbol	Contents
Grounding markings	6	Body ground 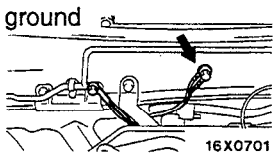 16X0701		Grounding is either by body ground, device ground or control unit interior ground. These are indicated as illustrated.
	7	Device ground 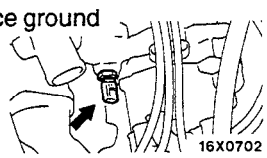 16X0702		
	8	Ground in control unit 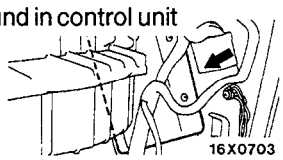 16X0703		

WIRE COLOR CODES

Wire colors are identified by the following color codes.

Code	Wire color	Code	Wire color
B	Black	P	Pink
BR	Brown	R	Red
G	Green	SB	Sky blue
GR	Gray	v	Violet
L	Blue	W	White
LG	Light green	Y	Yellow
0	Orange		

Example: <F> 1.25 G – B

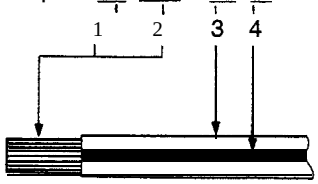

A16B0244

If a cable has two colors, the first of the two color code characters indicates the basic color (color of the cable coating) and the second indicates the marking color.

No.	Meaning
1	<F>: Flexible wire
	<T>: Twisted wire
2	Wire size (mm^2)
3	Basic color (color of the cable coating)
4	Marking color

NOTE

*: No code indicates 0.5 mm^2 (.0008 $in.^2$).
Cable color code in parentheses indicates 0.3 mm^2 (.0005 $in.^2$).

POWER DISTRIBUTION

COMPONENT LOCATION

Fusible link

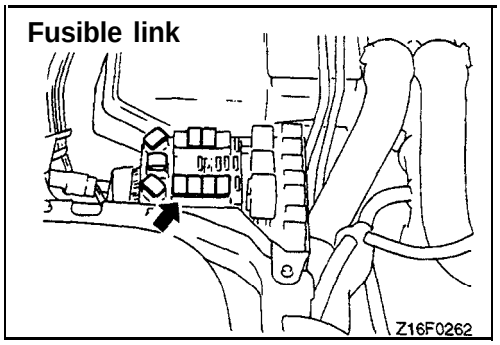

Dedicated fuse No. 1 to No. 7

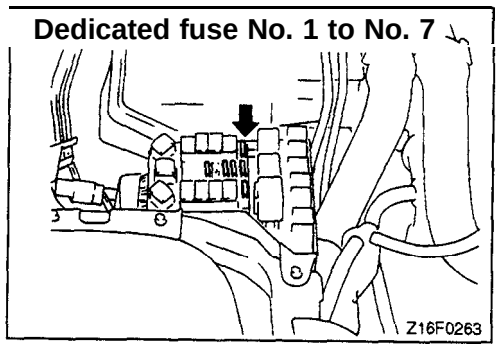

Dedicated fuse No. 8 and No. 9

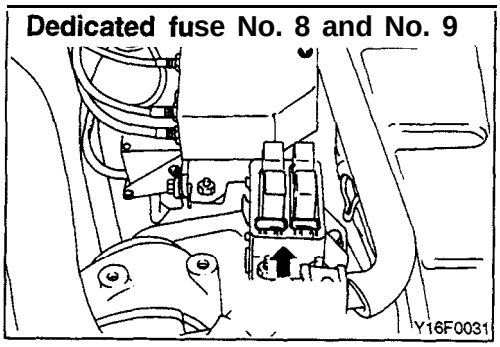

Dedicated fuse No. 10

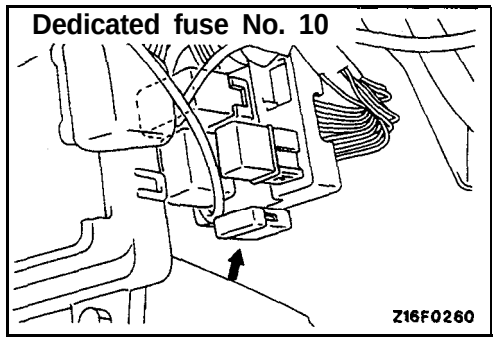

Headlight relay, Taillight relay

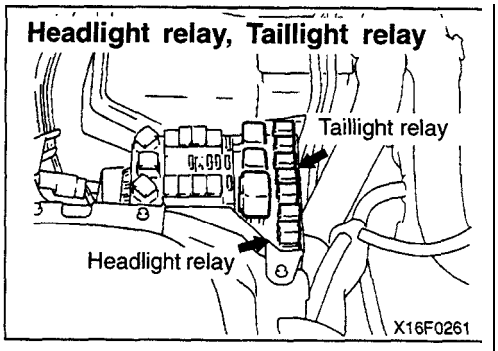

Defogger relay
<1992, 1993 and 1995 models>

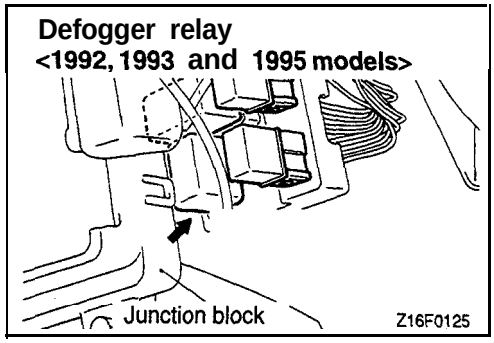

Defogger relay
<1994 models>

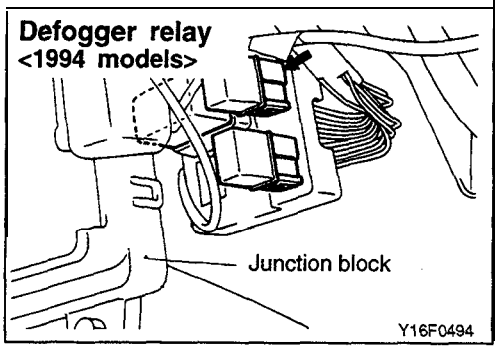

POWER DISTRIBUTION CIRCUIT (UP TO 1993 MODELS)

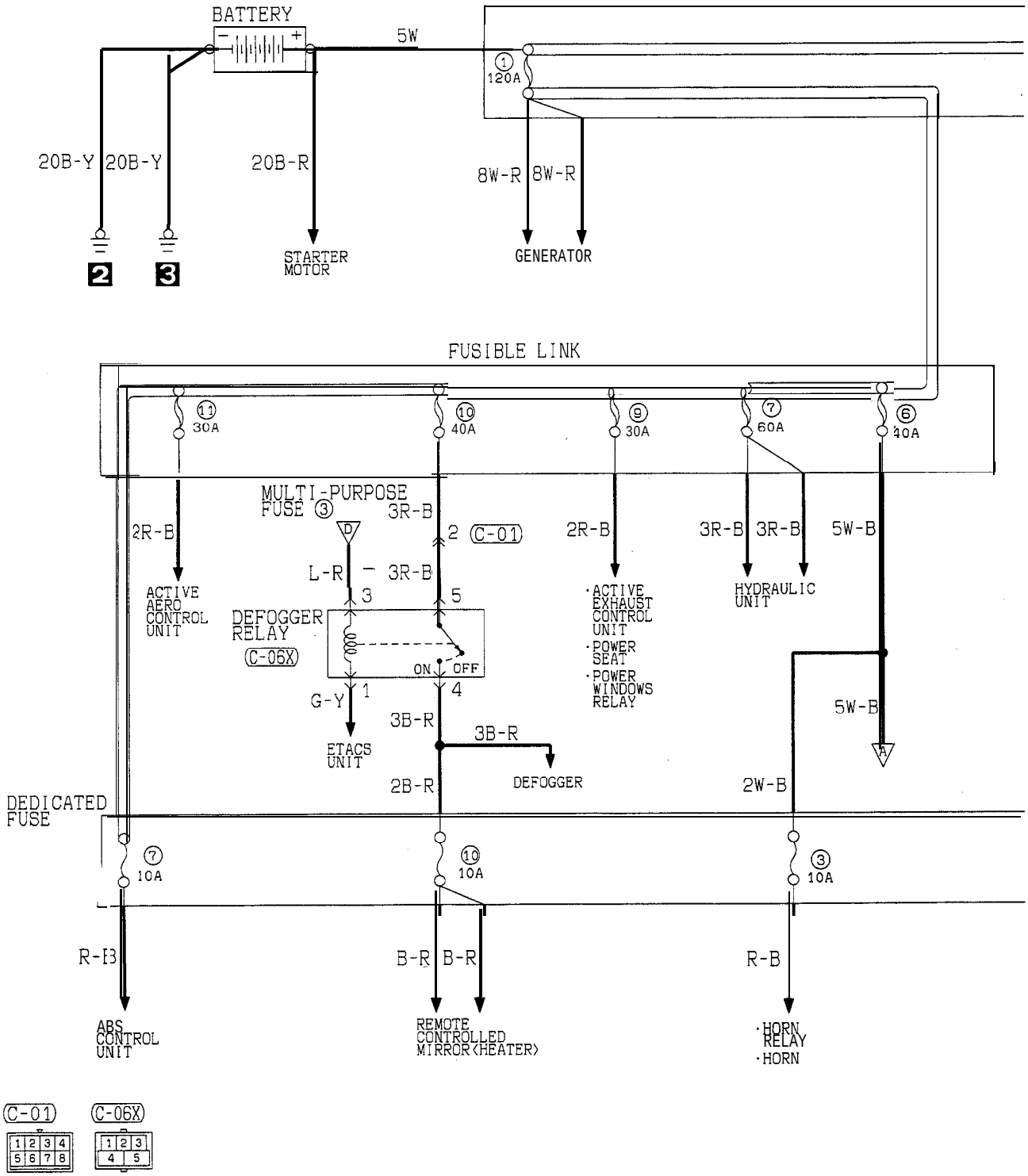

HR01M00AA

TSB Revision

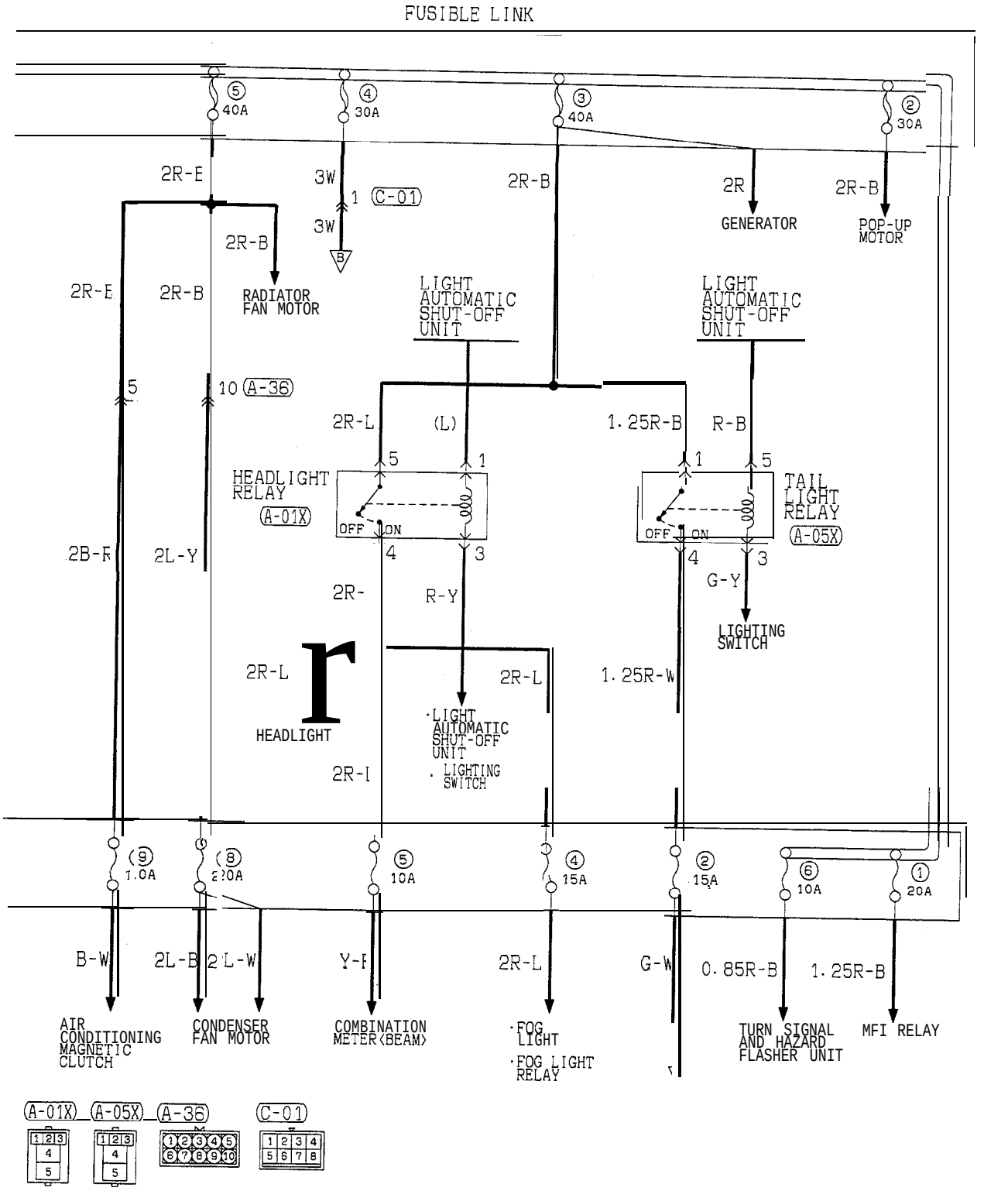
FUSIBLE LINK
⑤ 40A
④ 30A
③ 40A
② 30A
2R-E
3W
1
C-01
2R-B
2R
2R-B
GENERATOR
POP-UP MOTOR
3W
B
2R-B
2R-E
2R-B
RADIATOR FAN MOTOR
LIGHT AUTOMATIC SHUT-OFF UNIT
LIGHT AUTOMATIC SHUT-OFF UNIT
5
10
A-36
2R-L
(L)
1.25R-B
R-B
HEADLIGHT RELAY
A-01X
OFF
ON
TAIL LIGHT RELAY
A-05X
2B-R
2L-Y
G-Y
2R-
R-Y
LIGHTING SWITCH
2R-L
2R-L
1.25R-W
HEADLIGHT
·LIGHT AUTOMATIC SHUT-OFF UNIT
2R-I
· LIGHTING SWITCH
⑨ 1.0A
⑧ 20A
⑤ 10A
④ 15A
② 15A
⑥ 10A
① 20A
B-W
2L-B
2L-W
Y-R
2R-L
G-W
0.85R-B
1.25R-B
AIR CONDITIONING MAGNETIC CLUTCH
CONDENSER FAN MOTOR
COMBINATION METER(BEAM)
·FOG LIGHT
·FOG LIGHT RELAY
TURN SIGNAL AND HAZARD FLASHER UNIT
MFI RELAY
A-01X
A-05X
A-36
C-01

HR01M00AB

POWER DISTRIBUTION CIRCUIT (UP TO 1993 MODELS) (CONTINUED)

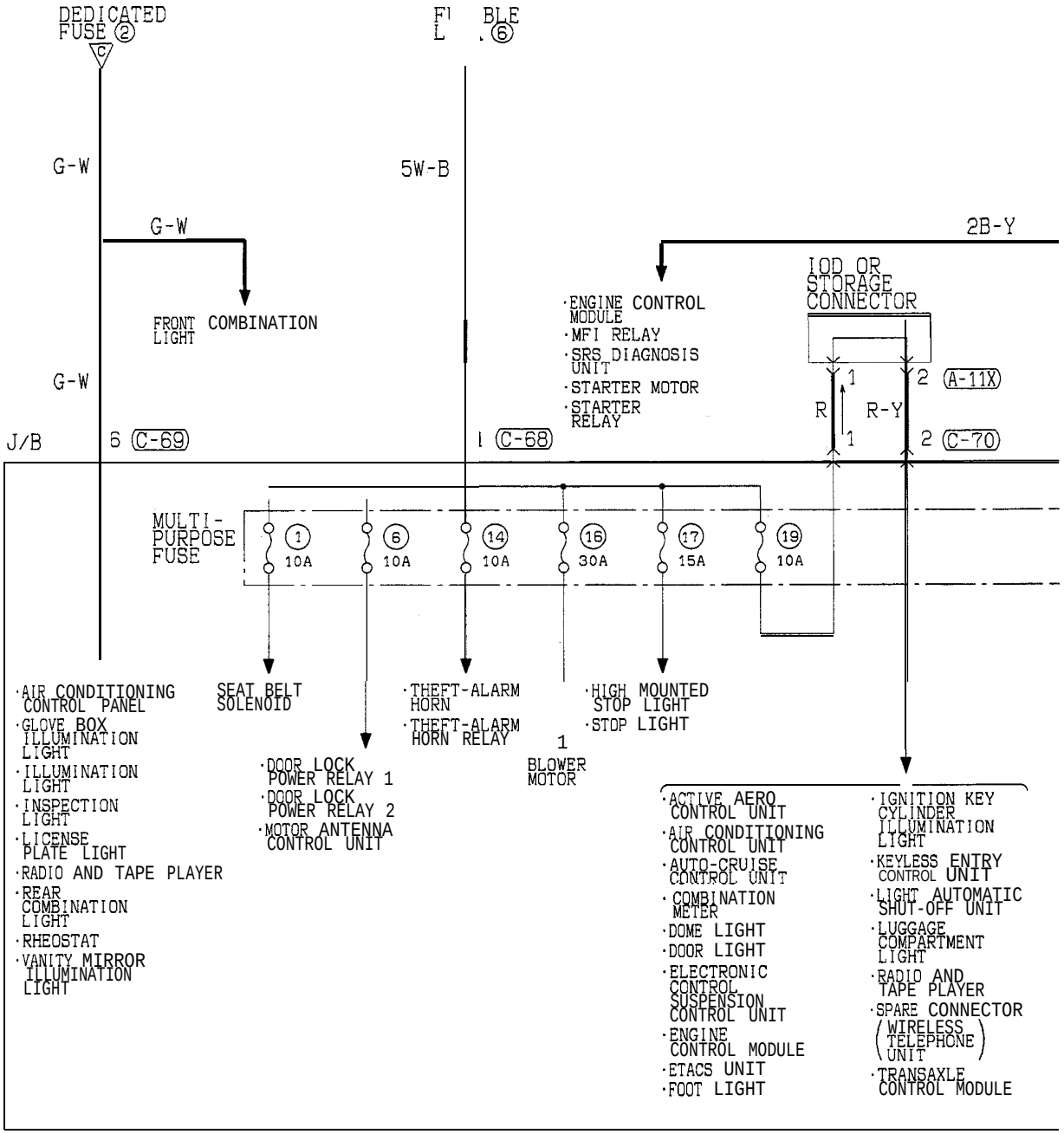

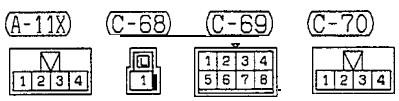

HR01M00BA

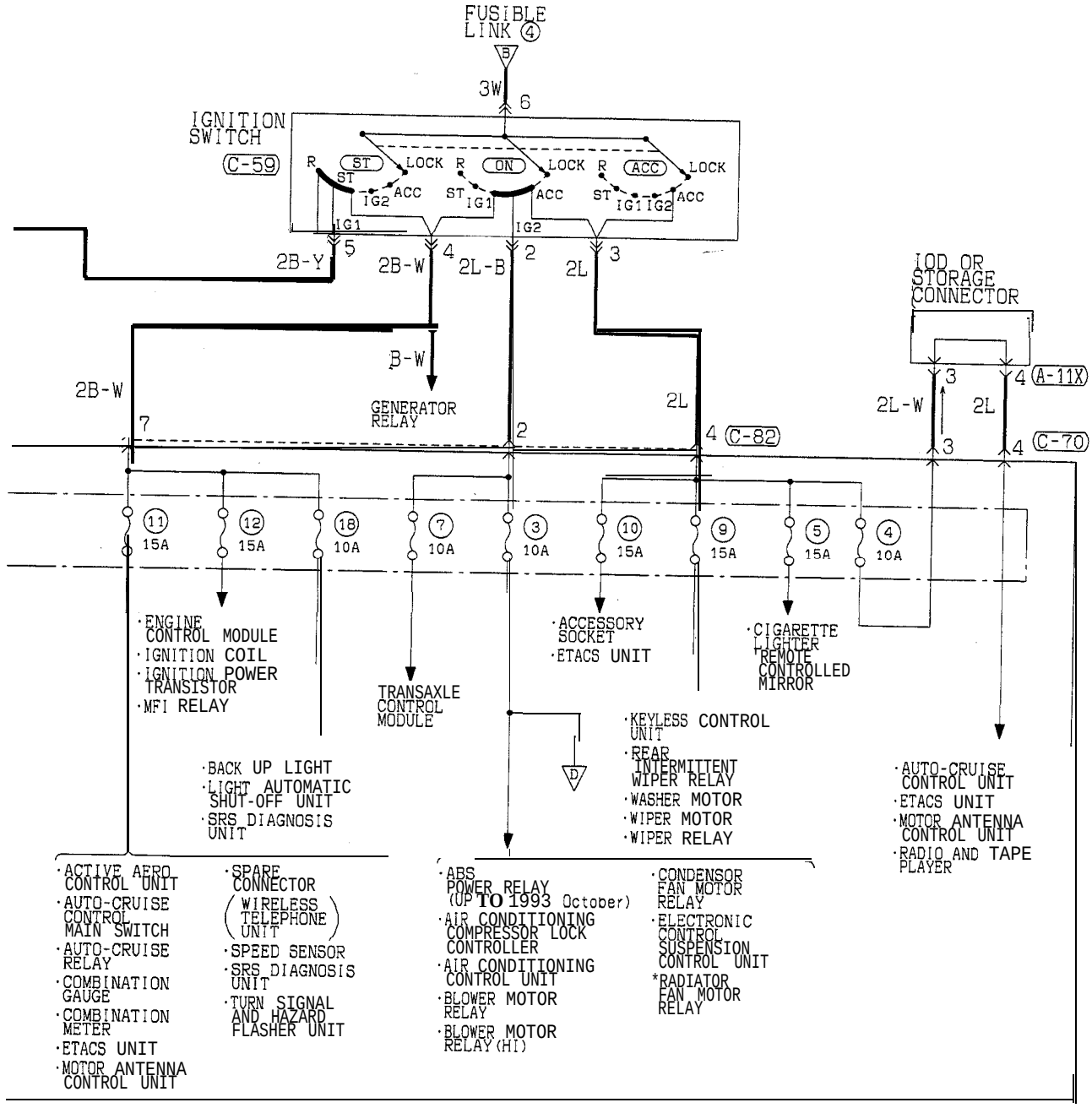

REMARK
THE ABOVE CIRCUIT DIAGRAM SHOWS THE CURRENT FLOW AT THE IGNITION KEY POSITION "ACC", "ON" AND "ST" COMBINED. BE SURE TRACE THE APPROPRIATE CIRCUIT DEPENDING ON THE IGNITION KEY POSITION.

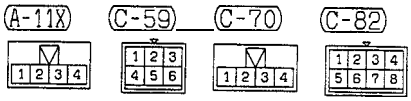

HR01M00BB

POWER DISTRIBUTION CIRCUIT (1994 MODELS)

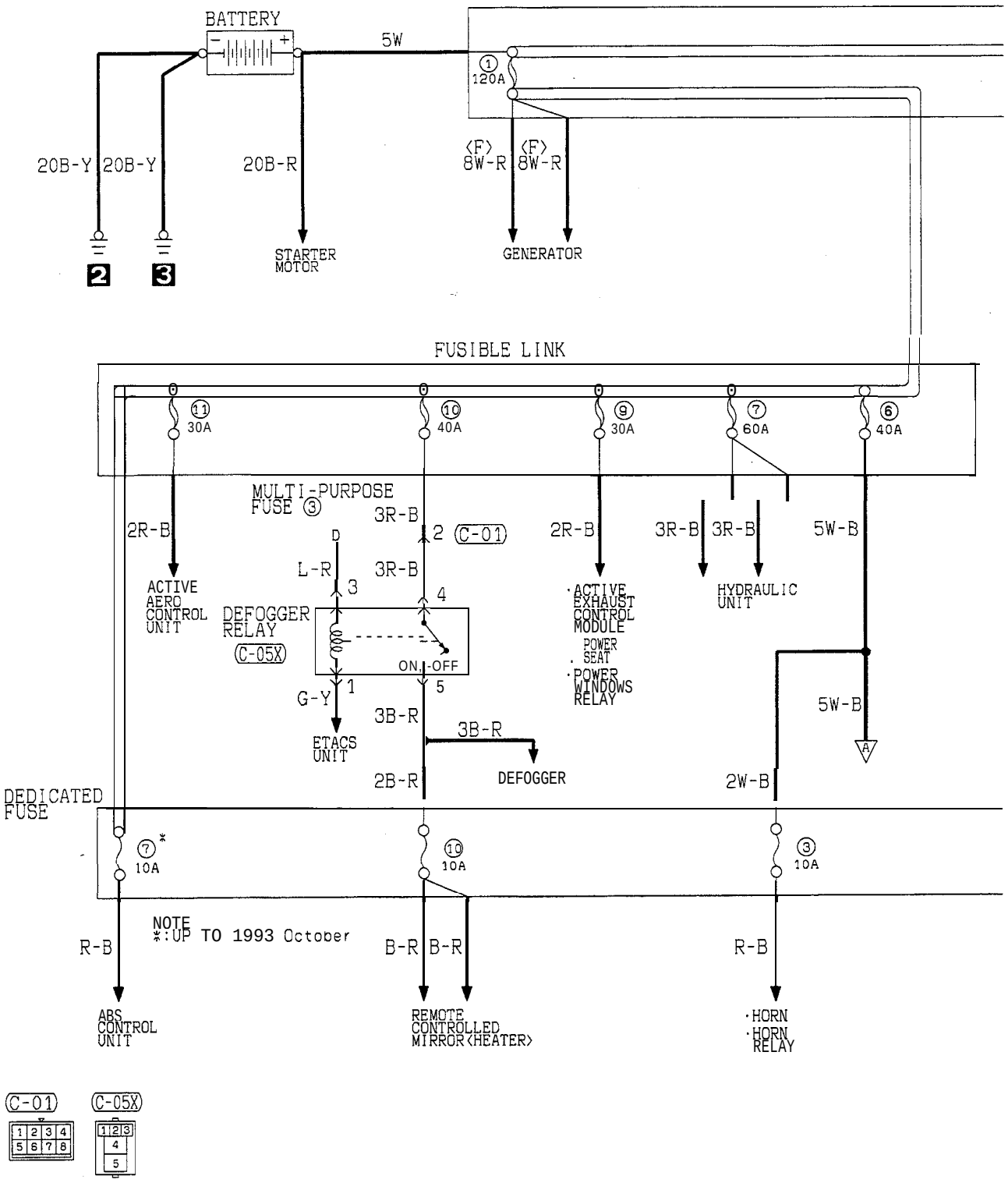

TSB Revision

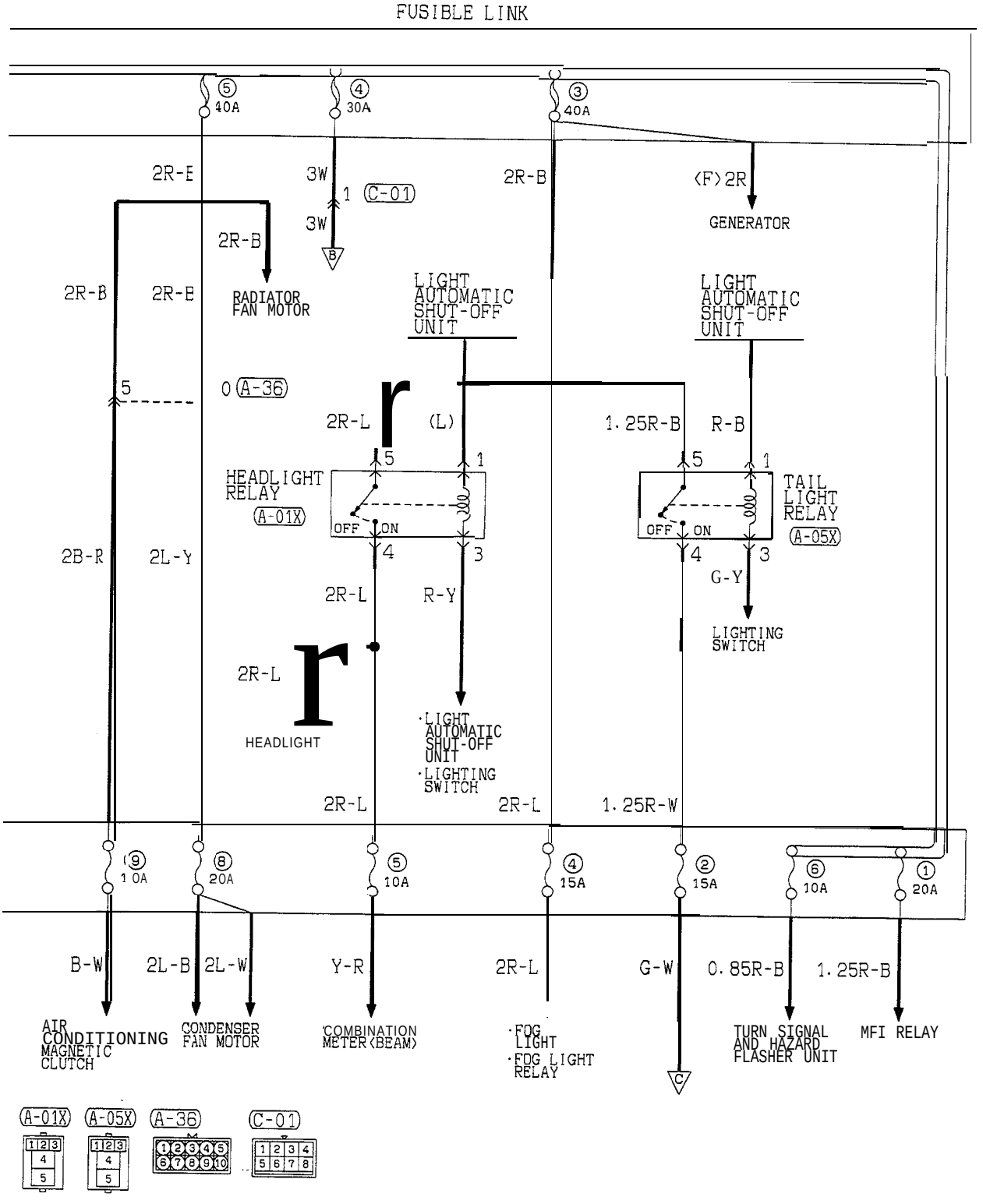
FUSIBLE LINK
⑤ 40A
④ 30A
③ 40A
2R-E
3W
1 C-01
2R-B
(F)2R
GENERATOR
3W
B
2R-B
2R-B
2R-B
RADIATOR FAN MOTOR
LIGHT AUTOMATIC SHUT-OFF UNIT
LIGHT AUTOMATIC SHUT-OFF UNIT
5
0 A-36
2R-L
(L)
1.25R-B
R-B
5
1
5
1
HEADLIGHT RELAY
A-01X
OFF
ON
TAIL LIGHT RELAY
A-05X
OFF
ON
2B-R
2L-Y
4
3
4
3
G-Y
2R-L
R-Y
LIGHTING SWITCH
2R-L
HEADLIGHT
·LIGHT AUTOMATIC SHUT-OFF UNIT
·LIGHTING SWITCH
2R-L
2R-L
1.25R-W
⑨ 10A
⑧ 20A
⑤ 10A
④ 15A
② 15A
⑥ 10A
① 20A
B-W
2L-B
2L-W
Y-R
2R-L
G-W
0.85R-B
1.25R-B
AIR CONDITIONING MAGNETIC CLUTCH
CONDENSER FAN MOTOR
COMBINATION METER (BEAM)
·FOG LIGHT
·FOG LIGHT RELAY
C
TURN SIGNAL AND HAZARD FLASHER UNIT
MFI RELAY
A-01X
A-05X
A-36
C-01
HR01M01AB

POWER DISTRIBUTION CIRCUIT (1994 MODELS) (CONTINUED)

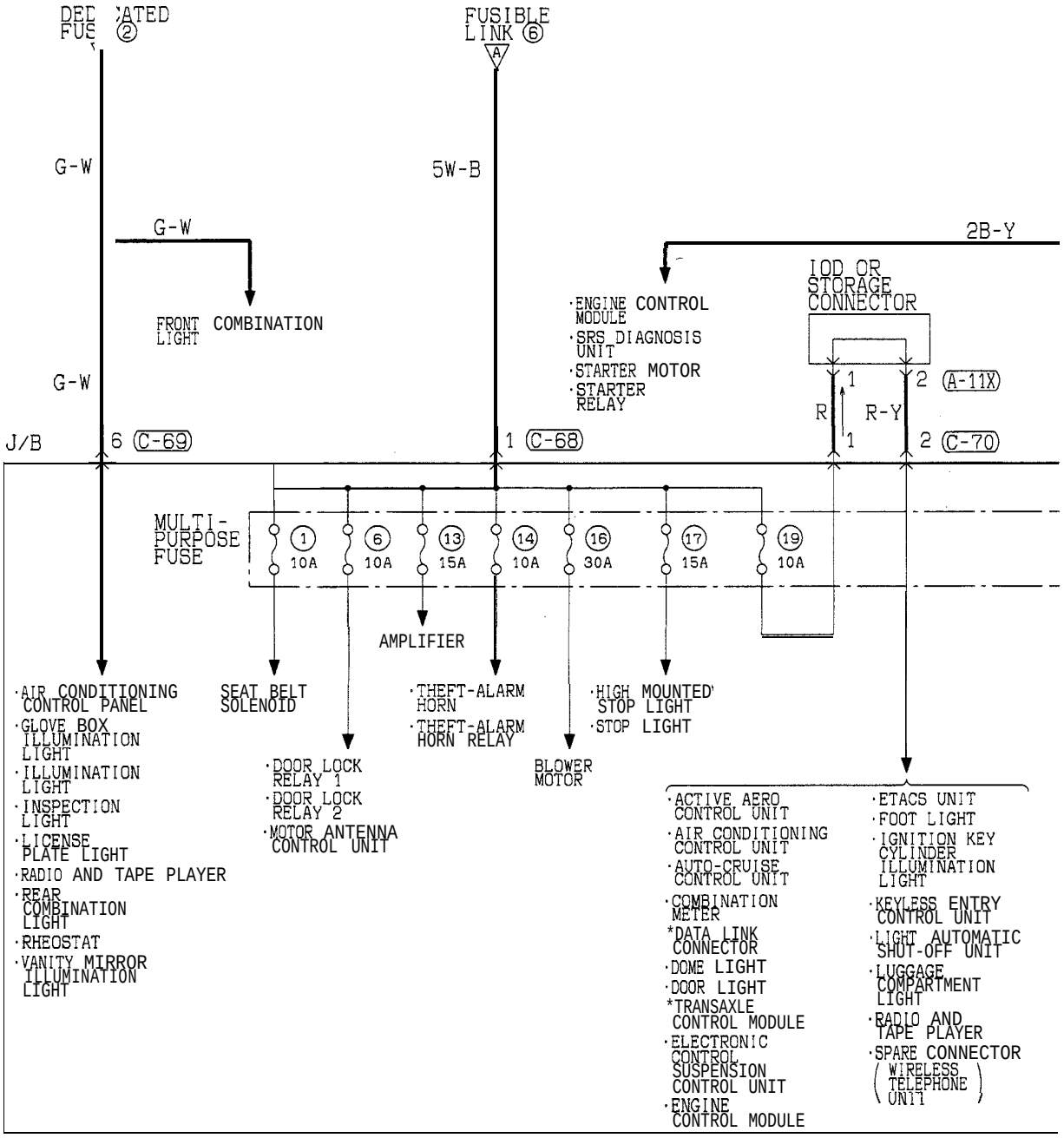

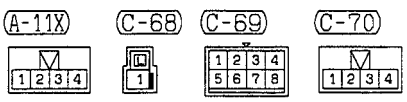

HR01M01BA

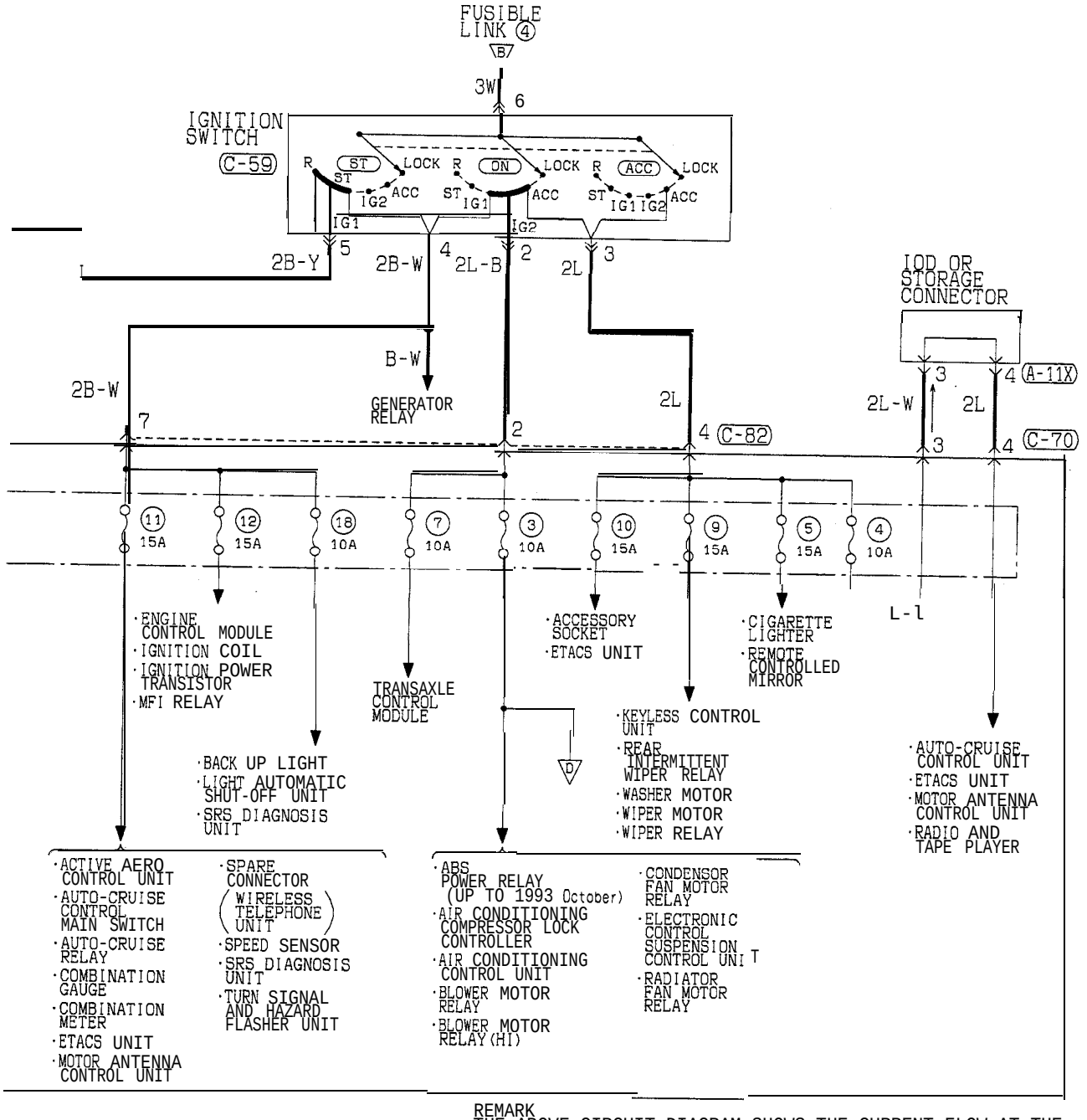

REMARK
THE ABOVE CIRCUIT DIAGRAM SHOWS THE CURRENT FLOW AT THE IGNITION KEY POSITION "ACC", "ON" AND "ST" COMBINED. BE SURE TRACE THE APPROPRIATE CIRCUIT DEPENDING ON THE IGNITION KEY POSITION.

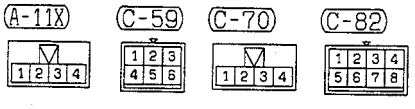

HR01M01BB

POWER DISTRIBUTION CIRCUIT (1995 MODELS)

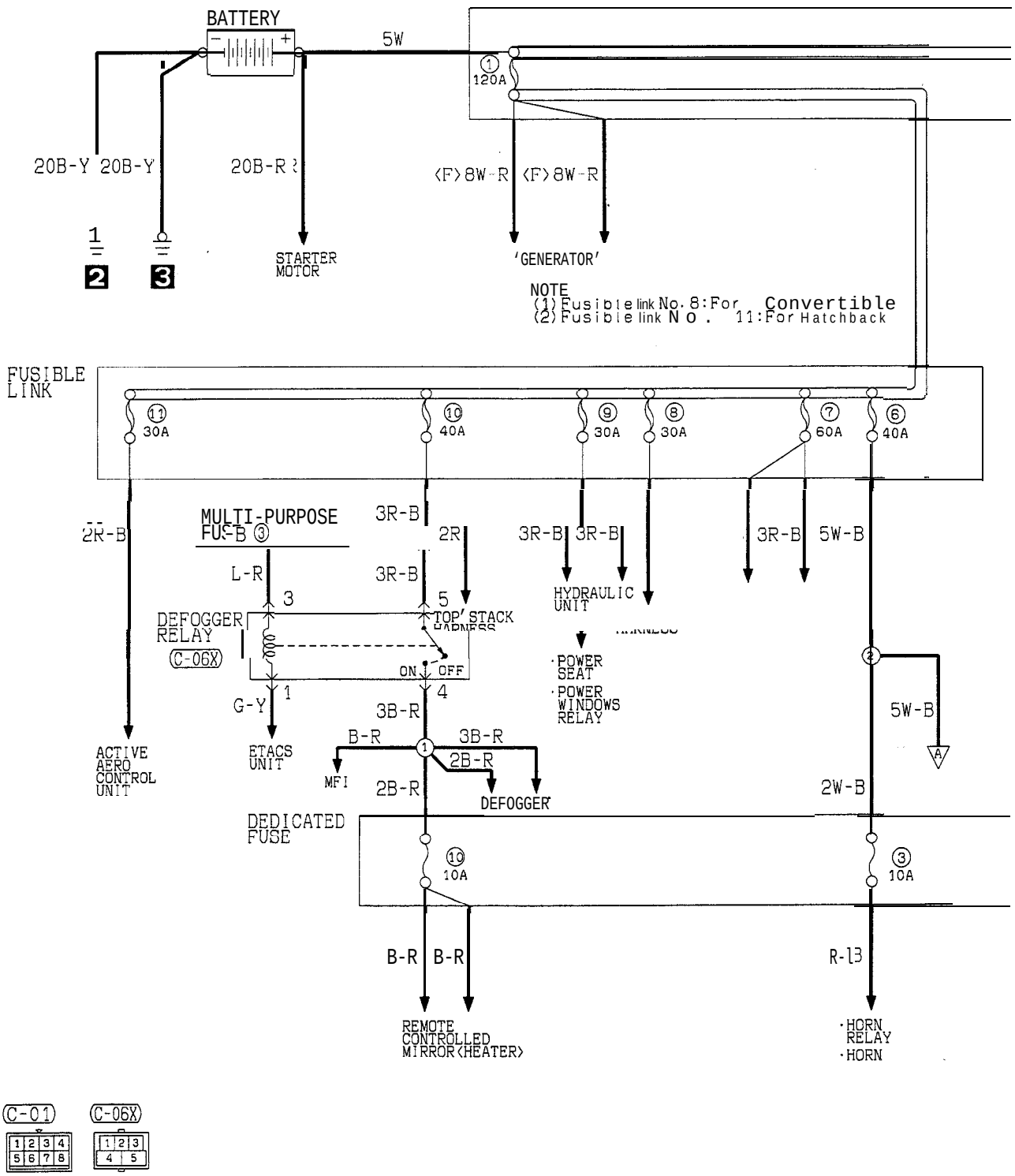

HR01M02AA

TSB Revision

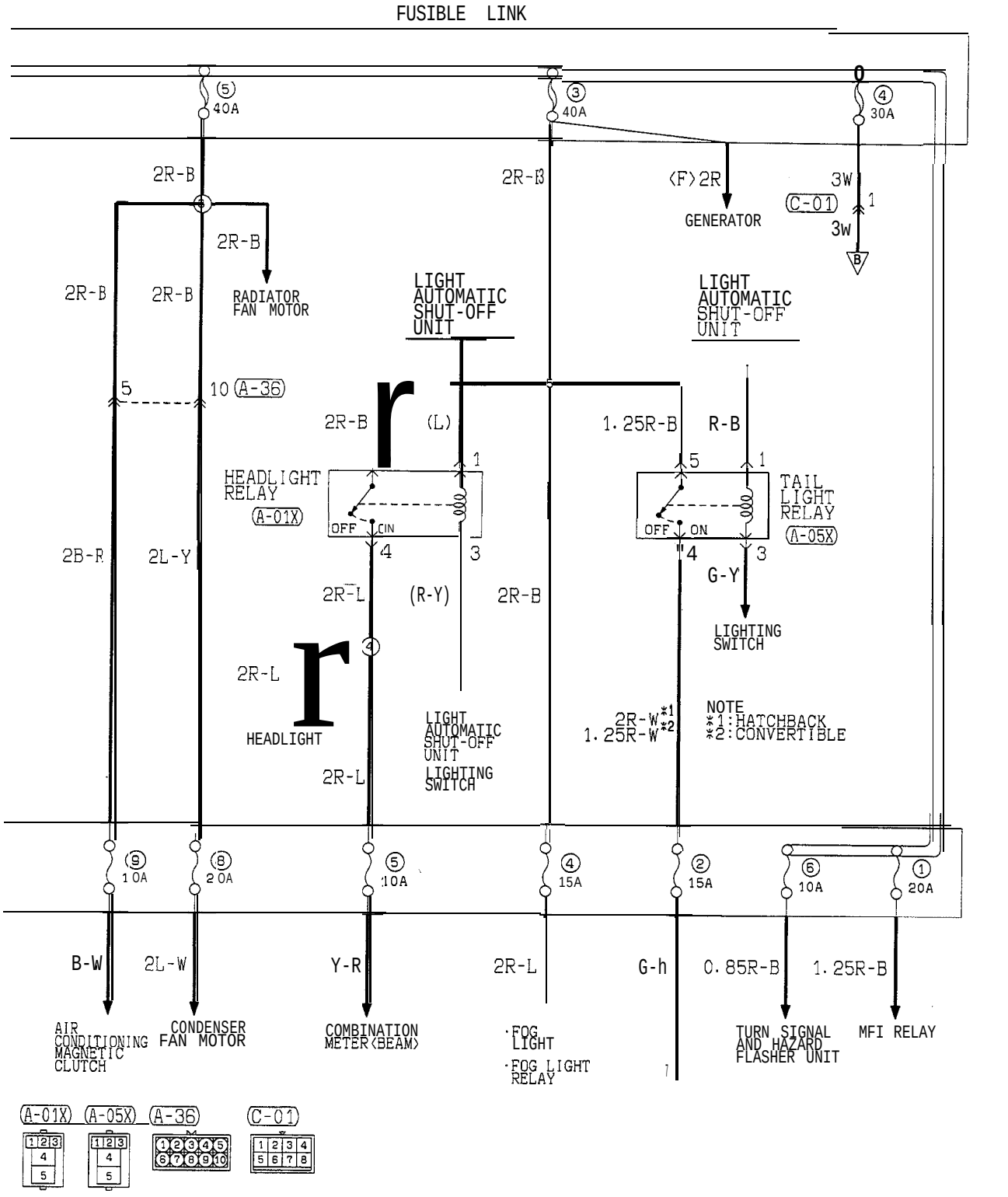
FUSIBLE LINK
5 40A
3 40A
4 30A
2R-B
2R-B
2R-B
2R-B
2R-B
2R-B
RADIATOR FAN MOTOR
LIGHT AUTOMATIC SHUT-OFF UNIT
(F)2R
GENERATOR
3W
C-01
1
3W
B
LIGHT AUTOMATIC SHUT-OFF UNIT
5
10 A-36
2R-B
(L)
1.25R-B
R-B
HEADLIGHT RELAY
A-01X
OFF
ON
TAIL LIGHT RELAY
A-05X
2B-R
2L-Y
2R-L
(R-Y)
2R-B
G-Y
LIGHTING SWITCH
2R-L
HEADLIGHT
LIGHT AUTOMATIC SHUT-OFF UNIT
2R-L
LIGHTING SWITCH
2R-W*1
1.25R-W*2
NOTE
*1:HATCHBACK
*2:CONVERTIBLE
9 10A
8 20A
5 10A
4 15A
2 15A
6 10A
1 20A
B-W
2L-W
Y-R
2R-L
G-h
0.85R-B
1.25R-B
AIR CONDITIONING MAGNETIC CLUTCH
CONDENSER FAN MOTOR
COMBINATION METER(BEAM)
·FOG LIGHT
·FOG LIGHT RELAY
TURN SIGNAL AND HAZARD FLASHER UNIT
MFI RELAY
A-01X
A-05X
A-36
C-01

HR01M02AB

POWER DISTRIBUTION CIRCUIT (1995 MODELS) (CONTINUED)

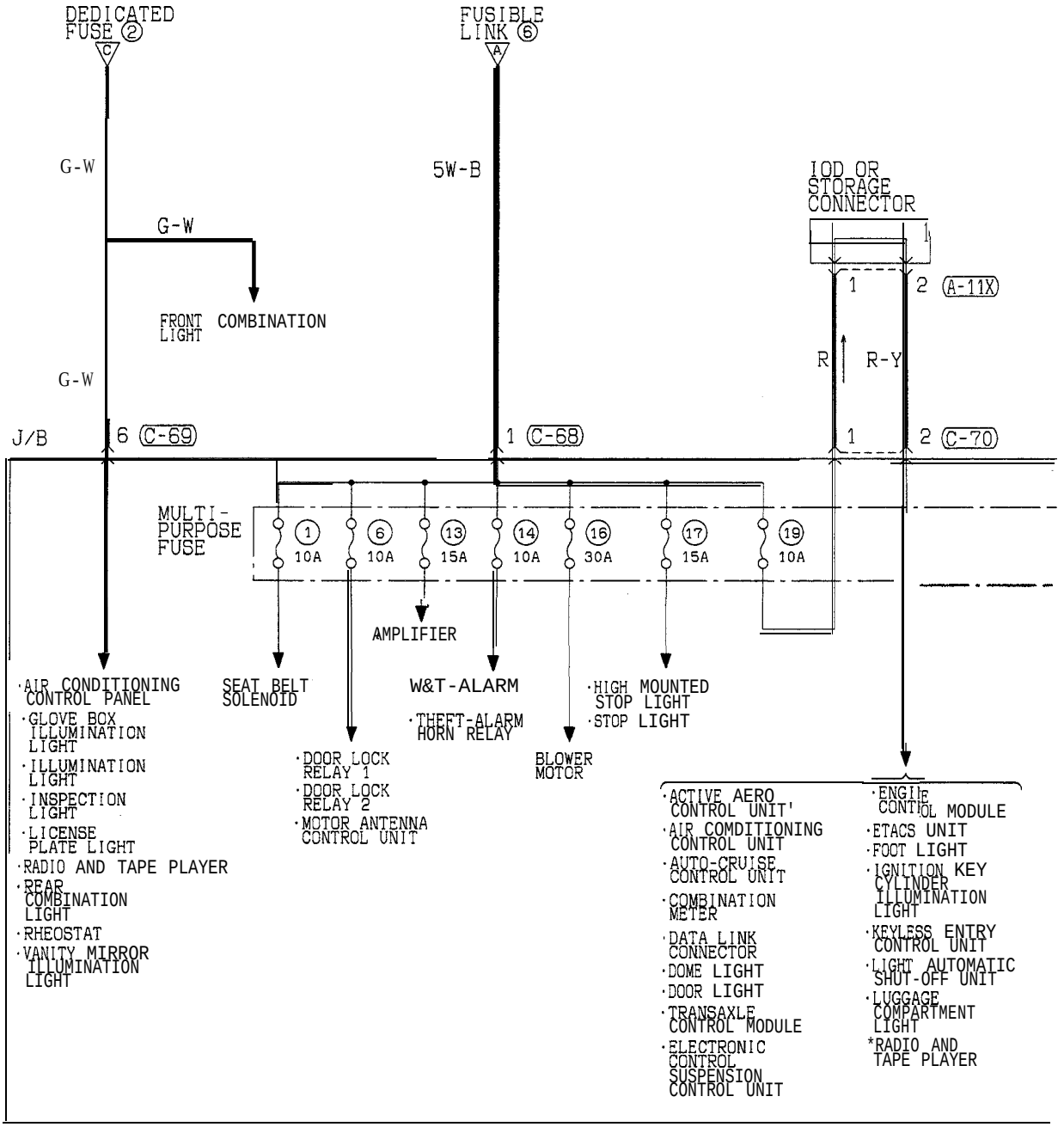

NOTE
*:HATCHBACK

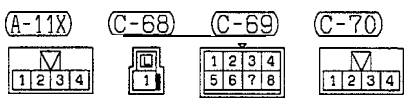

HR01M02BA

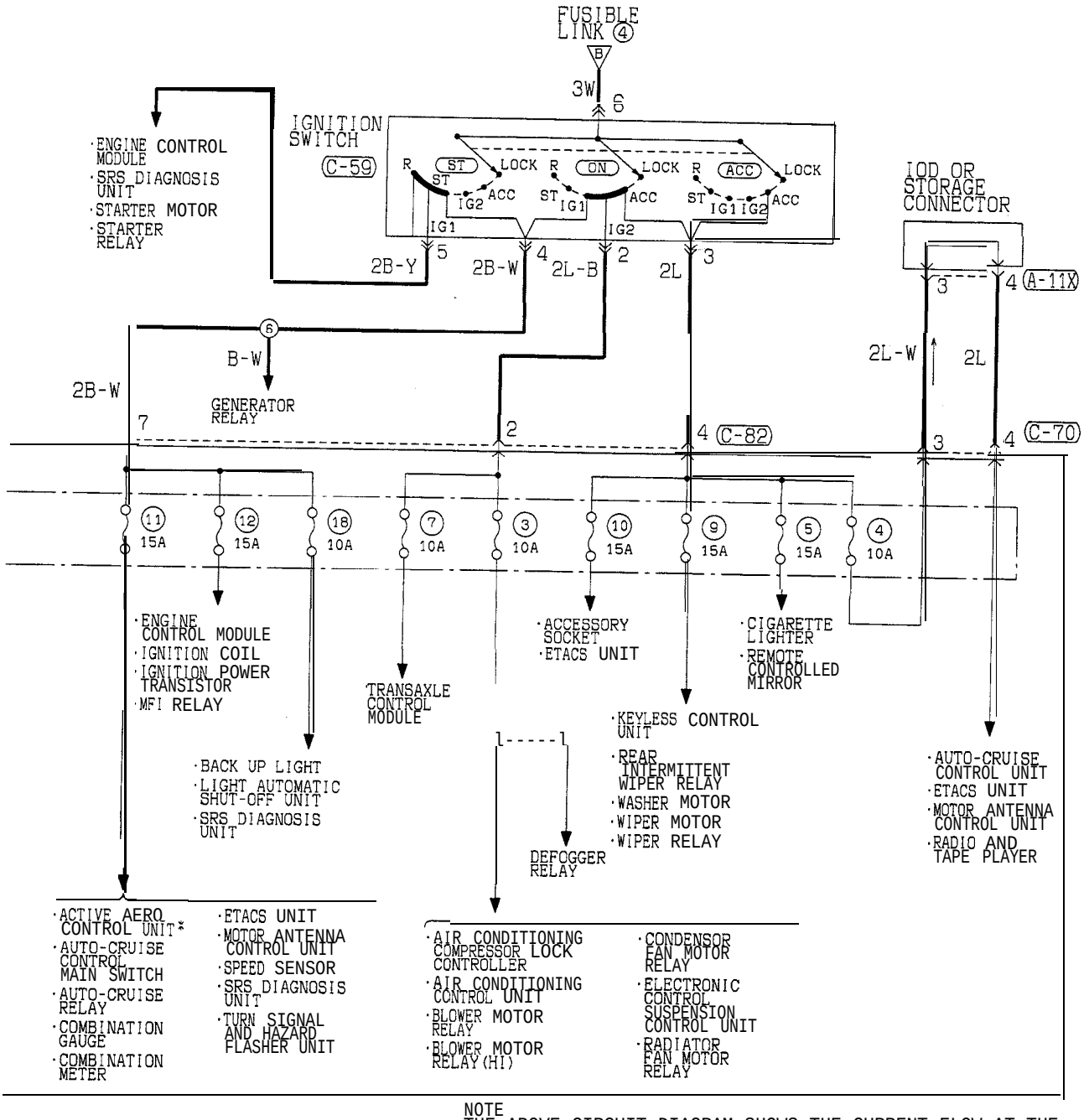

NOTE
THE ABOVE CIRCUIT DIAGRAM SHOWS THE CURRENT FLOW AT THE IGNITION KEY POSITION "ACC", "ON" AND "ST" COMBINED. BE SURE TRACE THE APPROPRIATE CIRCUIT DEPENDING ON THE IGNITION KEY POSITION.

*:HATCHBACK

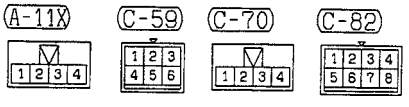

HR01M02BB

POWER DISTRIBUTION CIRCUIT (FROM 1996 MODELS)

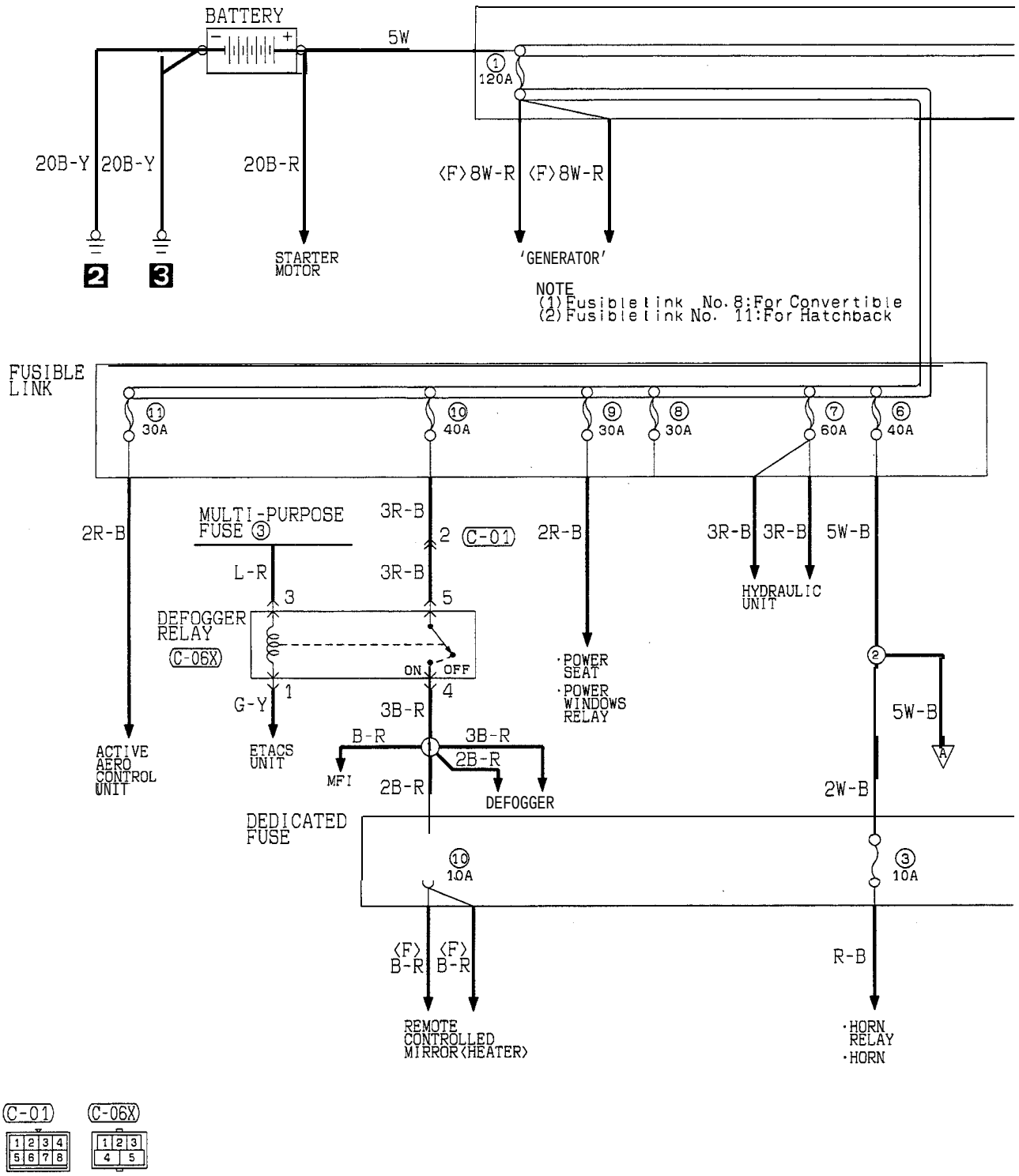

HR01M03AA

TSB Revision

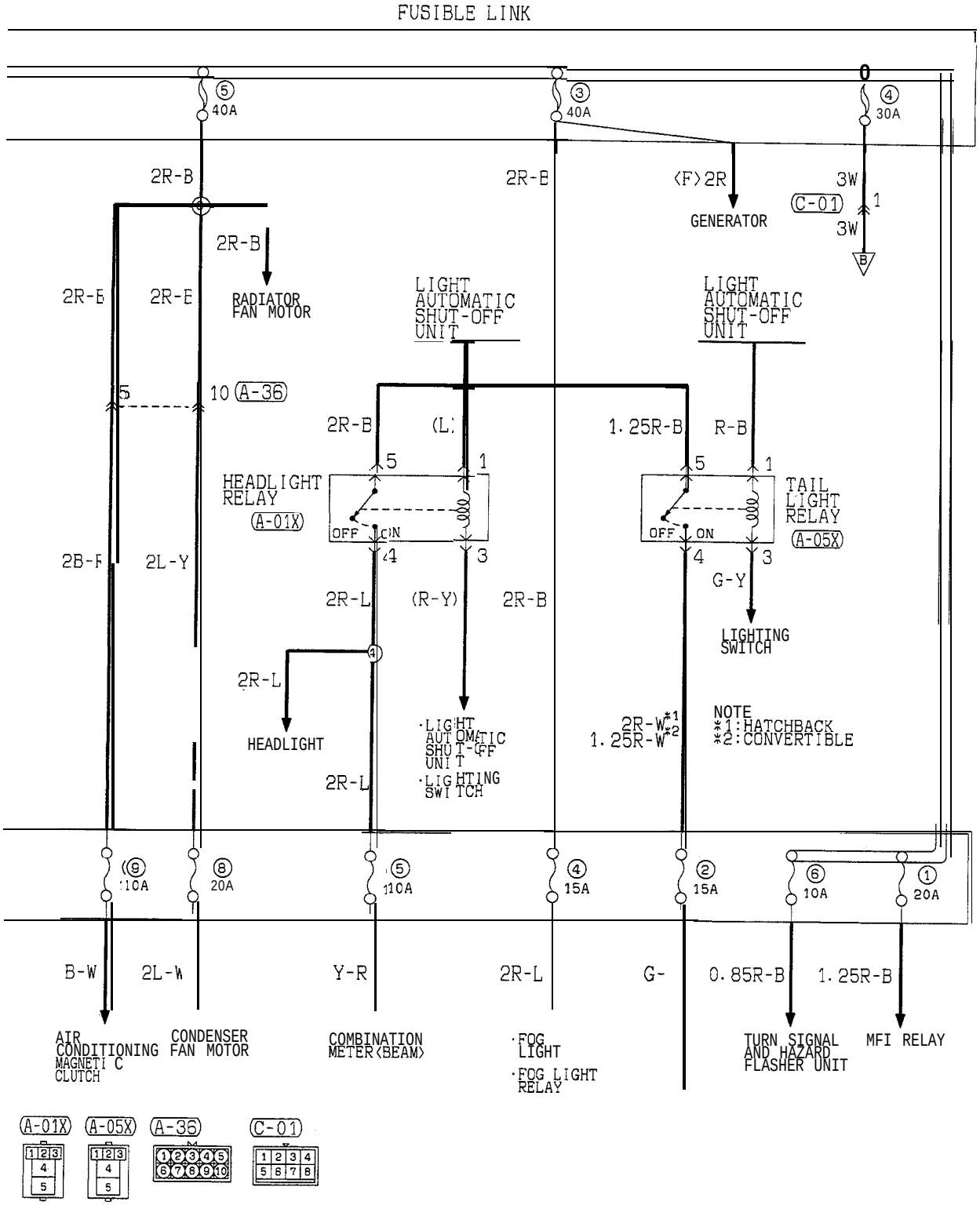
FUSIBLE LINK
⑤ 40A
③ 40A
④ 30A
2R-B
2R-B
(F)2R
GENERATOR
3W
(C-01)
1
3W
B
2R-B
RADIATOR FAN MOTOR
2R-B
2R-B
LIGHT AUTOMATIC SHUT-OFF UNIT
LIGHT AUTOMATIC SHUT-OFF UNIT
5
10 (A-36)
2R-B
(L)
1.25R-B
R-B
5
1
5
1
HEADLIGHT RELAY
(A-01X)
OFF
ON
TAIL LIGHT RELAY
(A-05X)
OFF
ON
2B-F
2L-Y
4
3
4
3
G-Y
2R-L
(R-Y)
2R-B
LIGHTING SWITCH
2R-L
HEADLIGHT
·LIGHT AUTOMATIC SHUT-OFF UNIT
·LIGHTING SWITCH
2R-L
2R-W*1
1.25R-W*2
NOTE
*1:HATCHBACK
*2:CONVERTIBLE
⑨ 10A
⑧ 20A
⑤ 10A
④ 15A
② 15A
⑥ 10A
① 20A
B-W
2L-W
Y-R
2R-L
G-
0.85R-B
1.25R-B
AIR CONDITIONING MAGNETIC CLUTCH
CONDENSER FAN MOTOR
COMBINATION METER(BEAM)
·FOG LIGHT
·FOG LIGHT RELAY
TURN SIGNAL AND HAZARD FLASHER UNIT
MFI RELAY
(A-01X)
(A-05X)
(A-36)
(C-01)

HRO1M03AB

POWER DISTRIBUTION CIRCUIT (FROM 1996 MODELS) (CONTINUED)

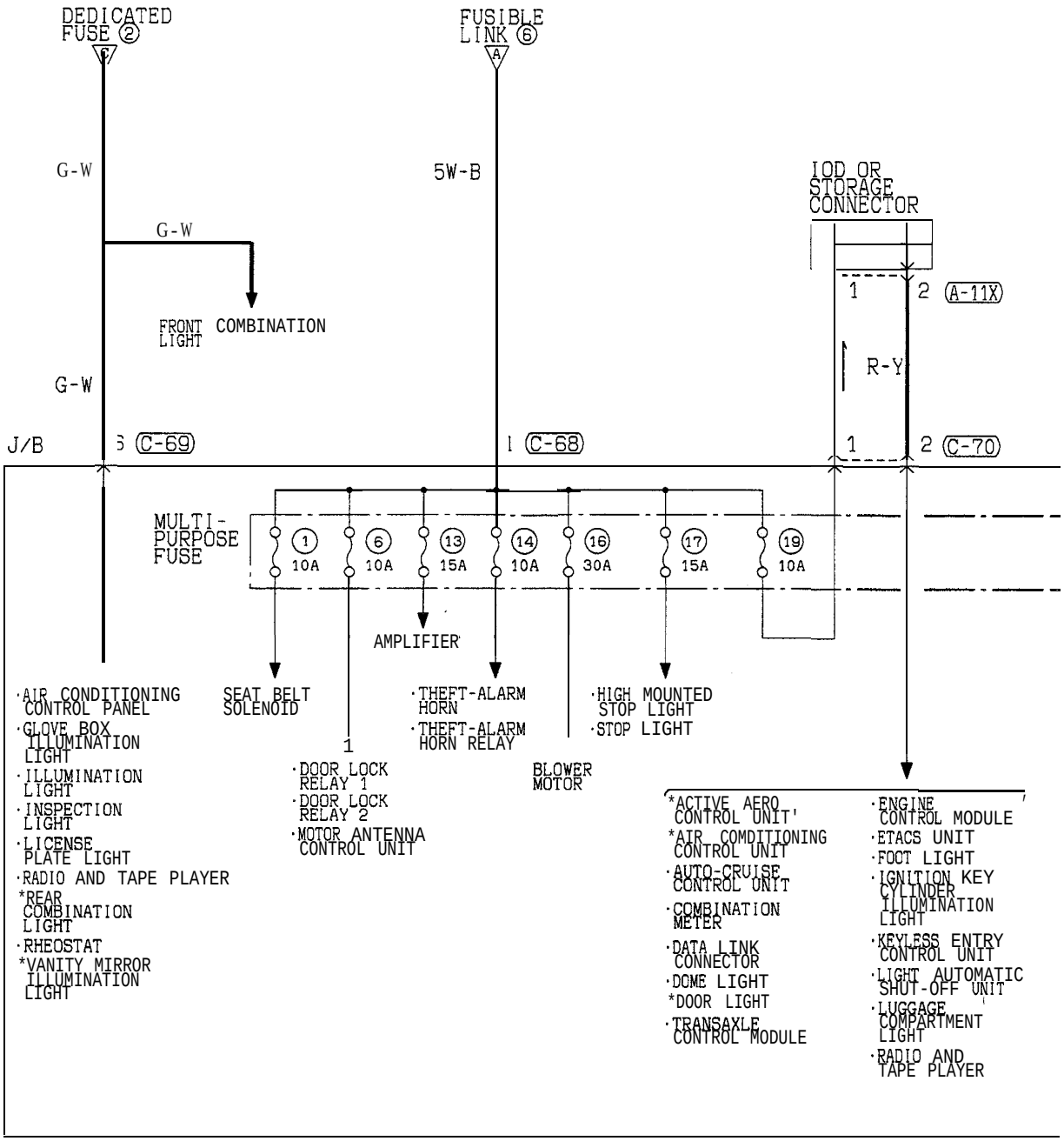

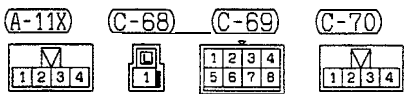

HR01M03BA

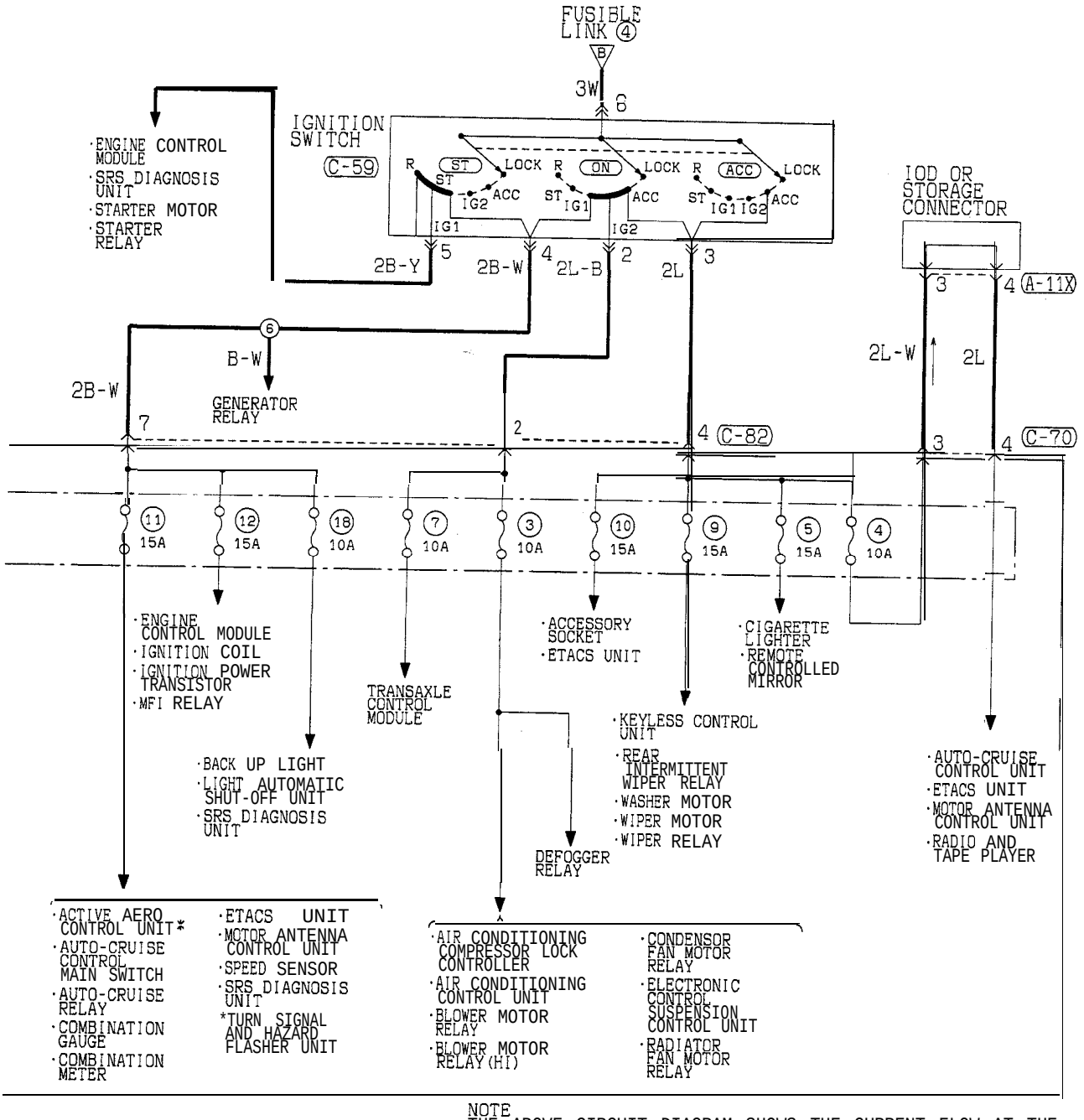

NOTE
THE ABOVE CIRCUIT DIAGRAM SHOWS THE CURRENT FLOW AT THE IGNITION KEY POSITION "ACC", "ON" AND "ST" COMBINED. BE SURE TRACE THE APPROPRIATE CIRCUIT DEPENDING ON THE IGNITION KEY POSITION.

*:HATCHBACK

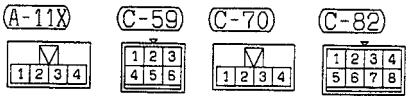

HR01M03BB

MFI CIRCUIT (1992 MODEL)

<NON TURBO>

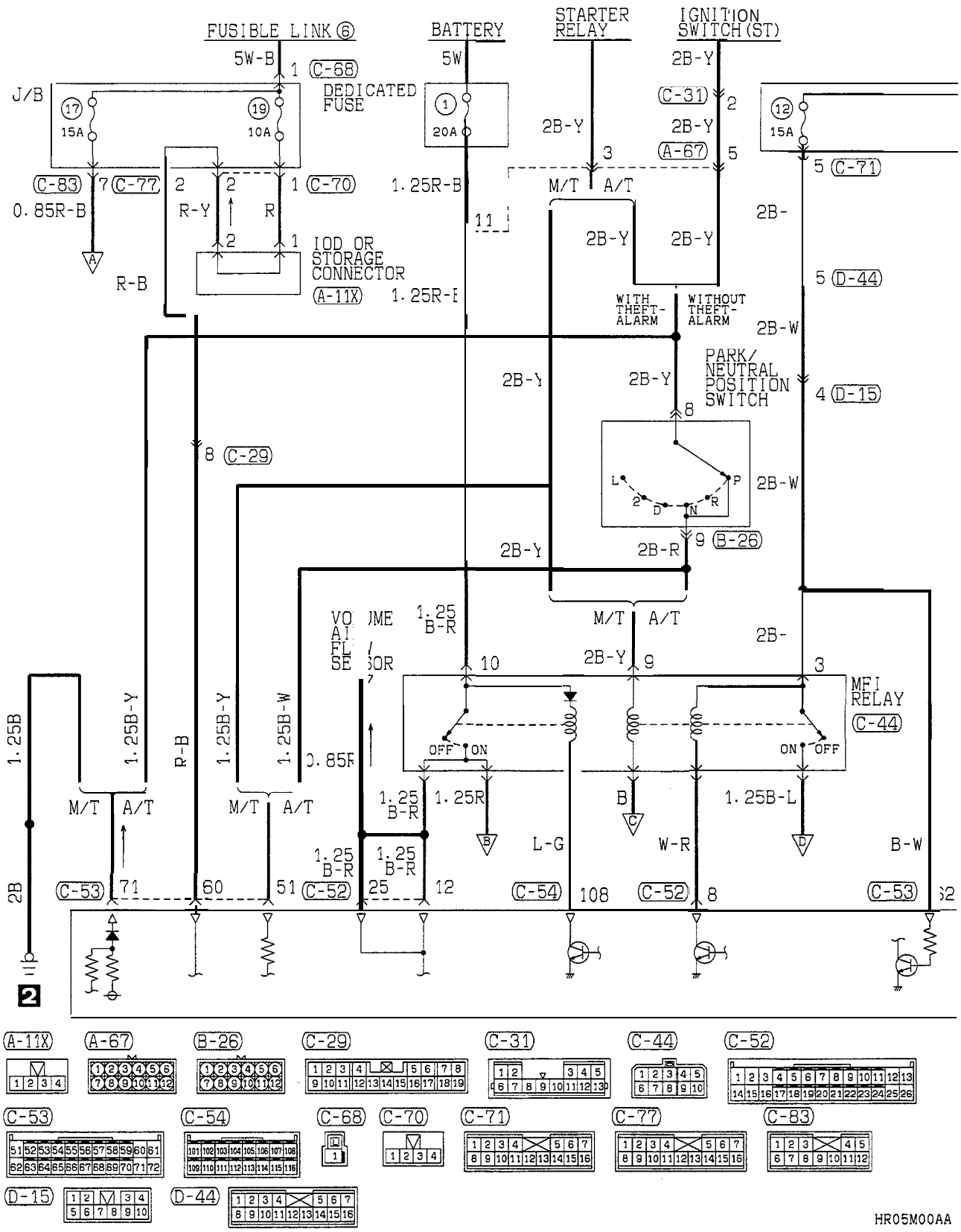

TSB Revision

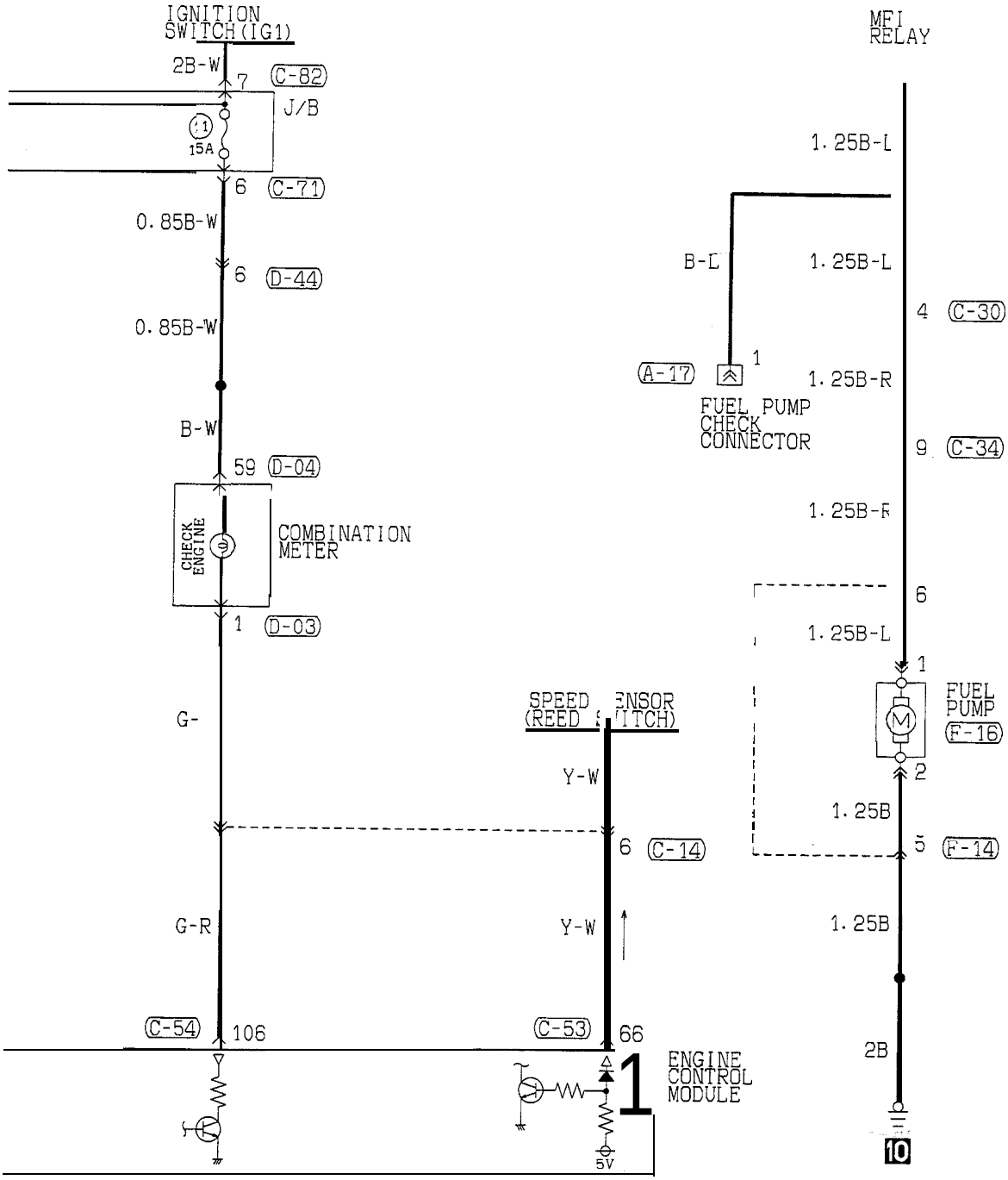

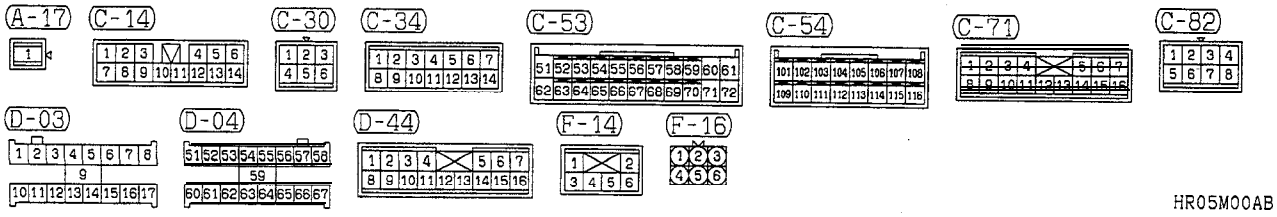

HR05M00AB

TSB Revision

MFI CIRCUIT (1992 MODEL) <NON TURBO> (CONTINUED)

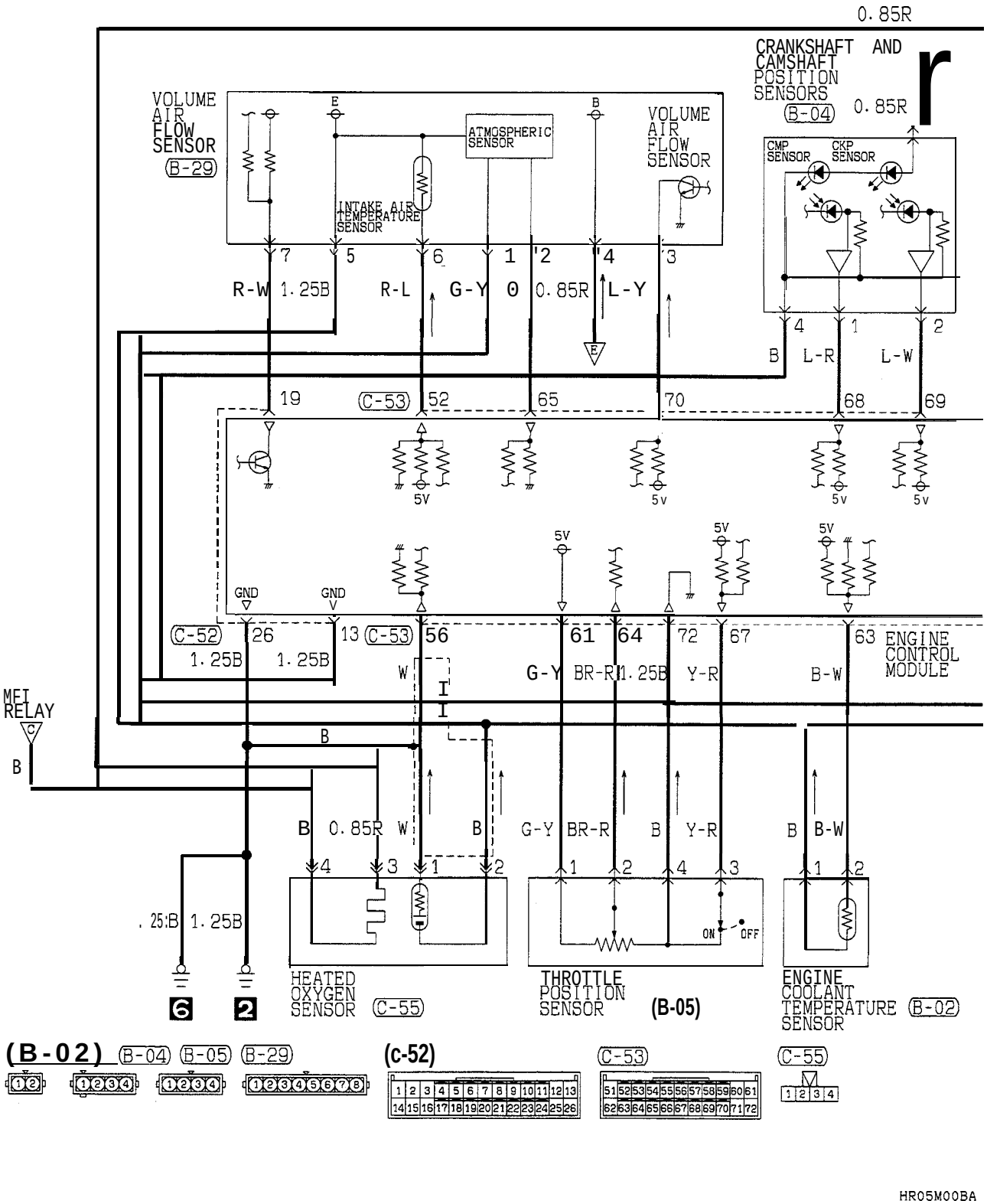

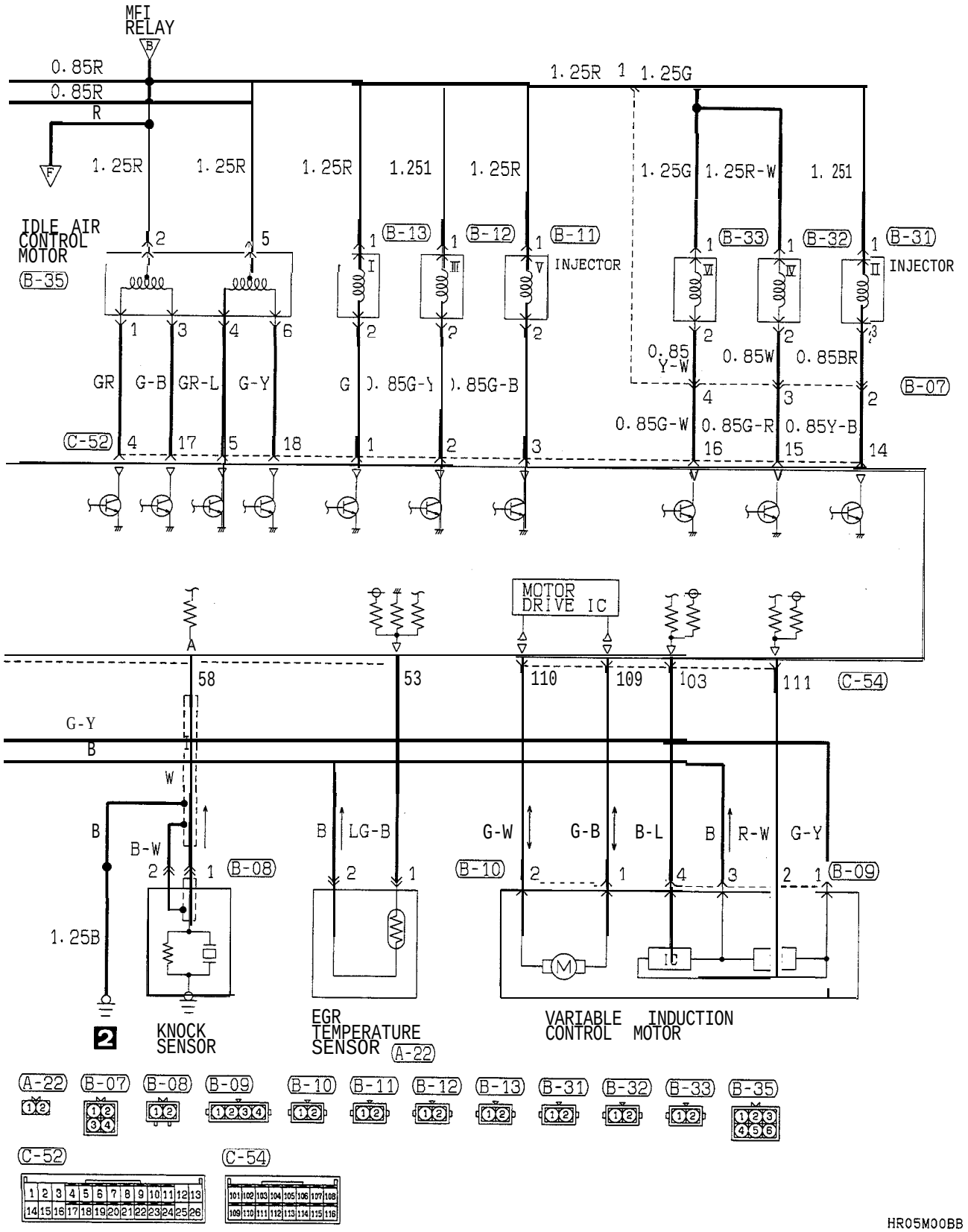

HR05M00BB

TSB Revision

MFI CIRCUIT (1992 MODEL) <NON TURBO> (CONTINUED)

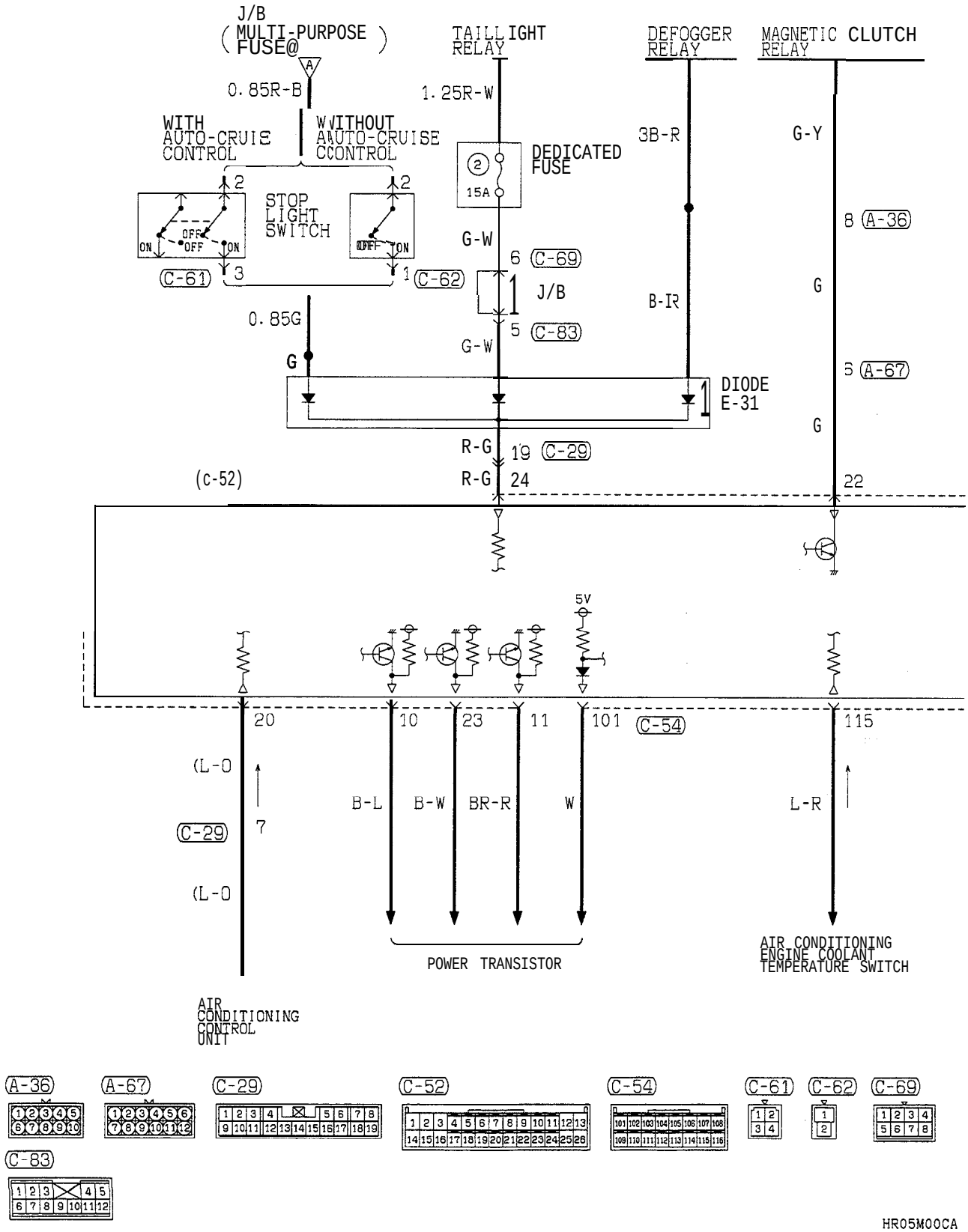

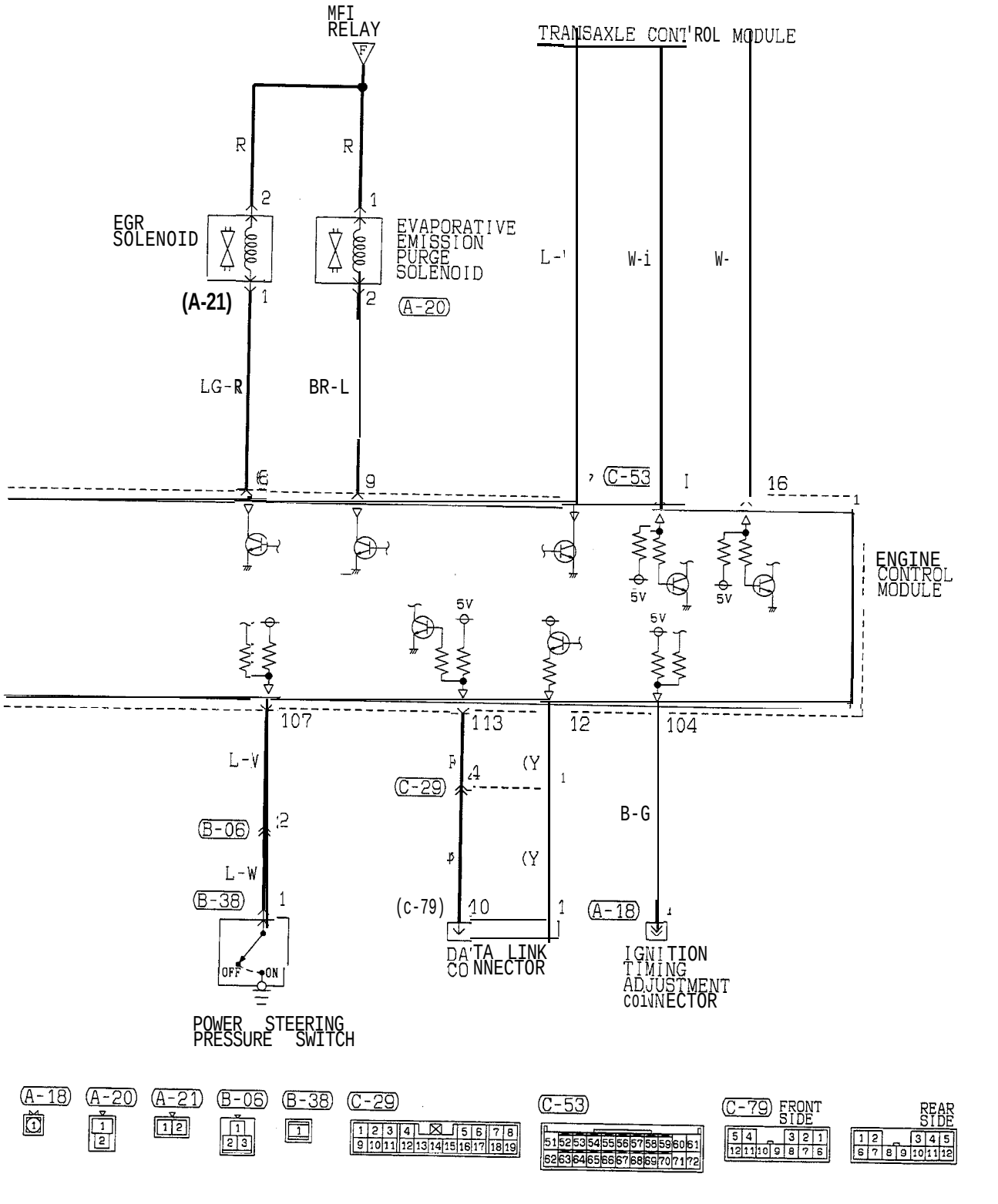
MFI RELAY
TRANSAXLE CONTROL MODULE
R
R
EGR SOLENOID
EVAPORATIVE EMISSION PURGE SOLENOID
(A-21)
(A-20)
LG-R
BR-L
L-
W-i
W-
C-53
ENGINE CONTROL MODULE
5V
107
113
12
104
L-V
C-29
B-06
L-W
B-38
B-G
(c-79)
A-18
OFF
ON
DATA LINK CONNECTOR
IGNITION TIMING ADJUSTMENT CONNECTOR
POWER STEERING PRESSURE SWITCH
A-18
A-20
A-21
B-06
B-38
C-29
C-53
C-79
FRONT SIDE
REAR SIDE
HR05M00CB

MFI CIRCUIT (1992 MODEL)

<TURBO>

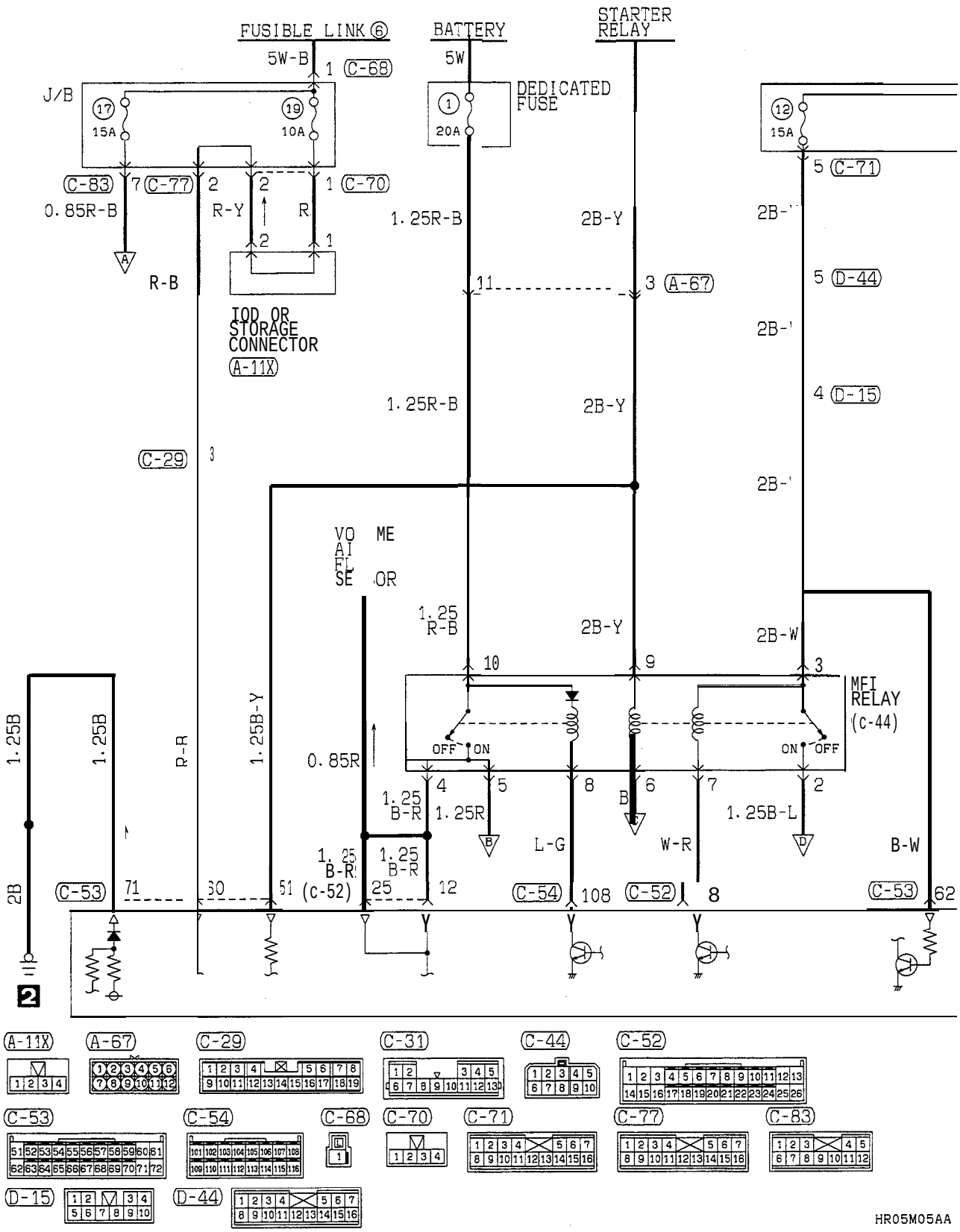

TSB Revision

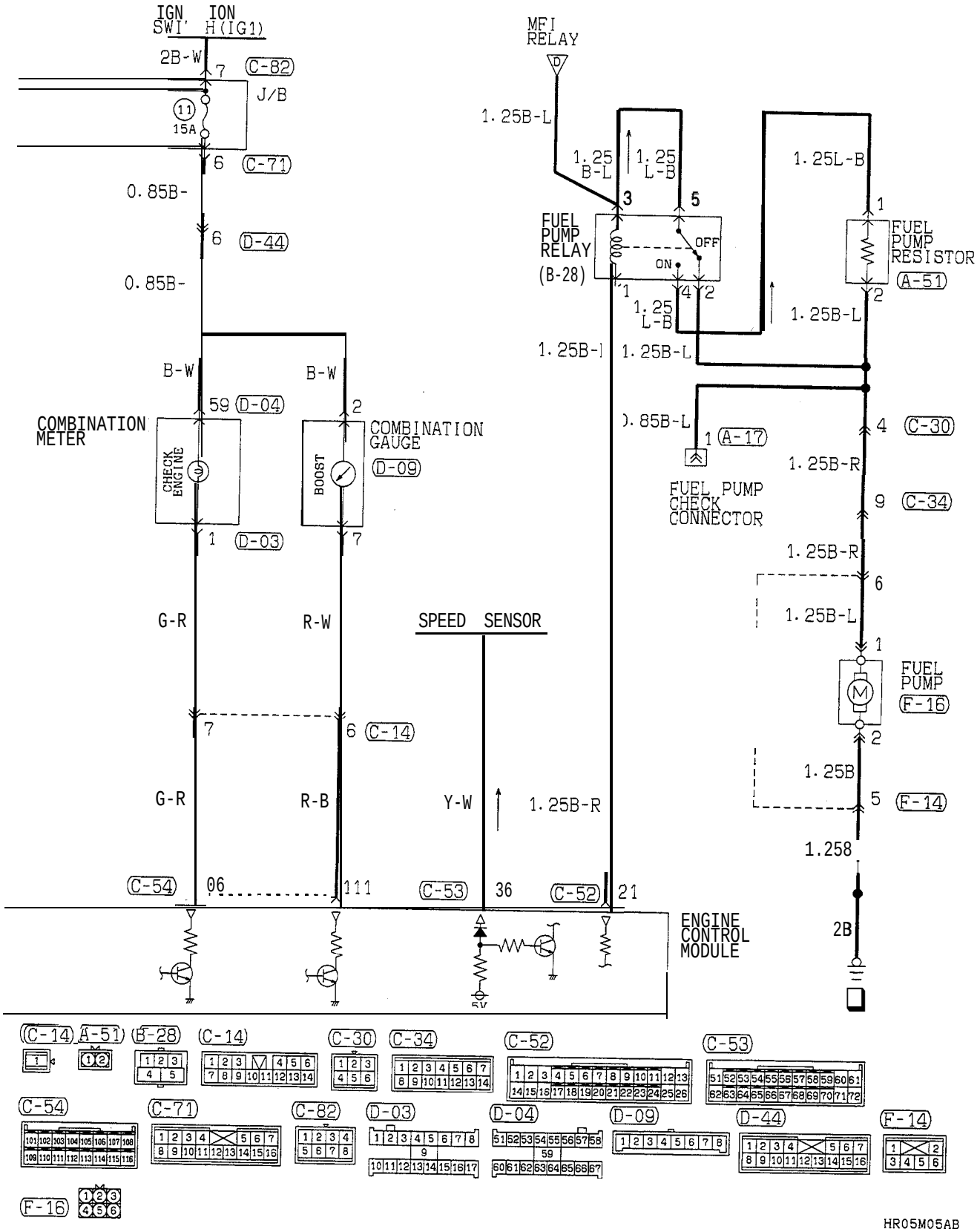
IGN SWITCH (IG1)
2B-W
7
C-82
J/B
11
15A
6
C-71
0.85B-
6
D-44
0.85B-
B-W
59
D-04
COMBINATION METER
CHECK ENGINE
1
D-03
B-W
2
COMBINATION GAUGE
BOOST
D-09
7
G-R
R-W
7
6
C-14
G-R
R-B
C-54
06
111
SPEED SENSOR
Y-W
C-53
36
1.25B-R
C-52
21
MFI RELAY
D
1.25B-L
1.25 B-L
1.25 L-B
3
5
FUEL PUMP RELAY (B-28)
OFF
ON
1
4
2
1.25 L-B
1.25B-L
1.25B-L
1.25B-L
1.25L-B
1
FUEL PUMP RESISTOR
A-51
2
1.25B-L
0.85B-L
1
A-17
FUEL PUMP CHECK CONNECTOR
4
C-30
1.25B-R
9
C-34
1.25B-R
6
1.25B-L
1
FUEL PUMP
F-16
2
1.25B
5
F-14
1.25B
2B
ENGINE CONTROL MODULE
5V
C-14
A-51
B-28
C-14
C-30
C-34
C-52
C-53
C-54
C-71
C-82
D-03
D-04
D-09
D-44
F-14
F-16
HR05M05AB

MFI CIRCUIT (1992 MODEL) <TURBO> (CONTINUED)

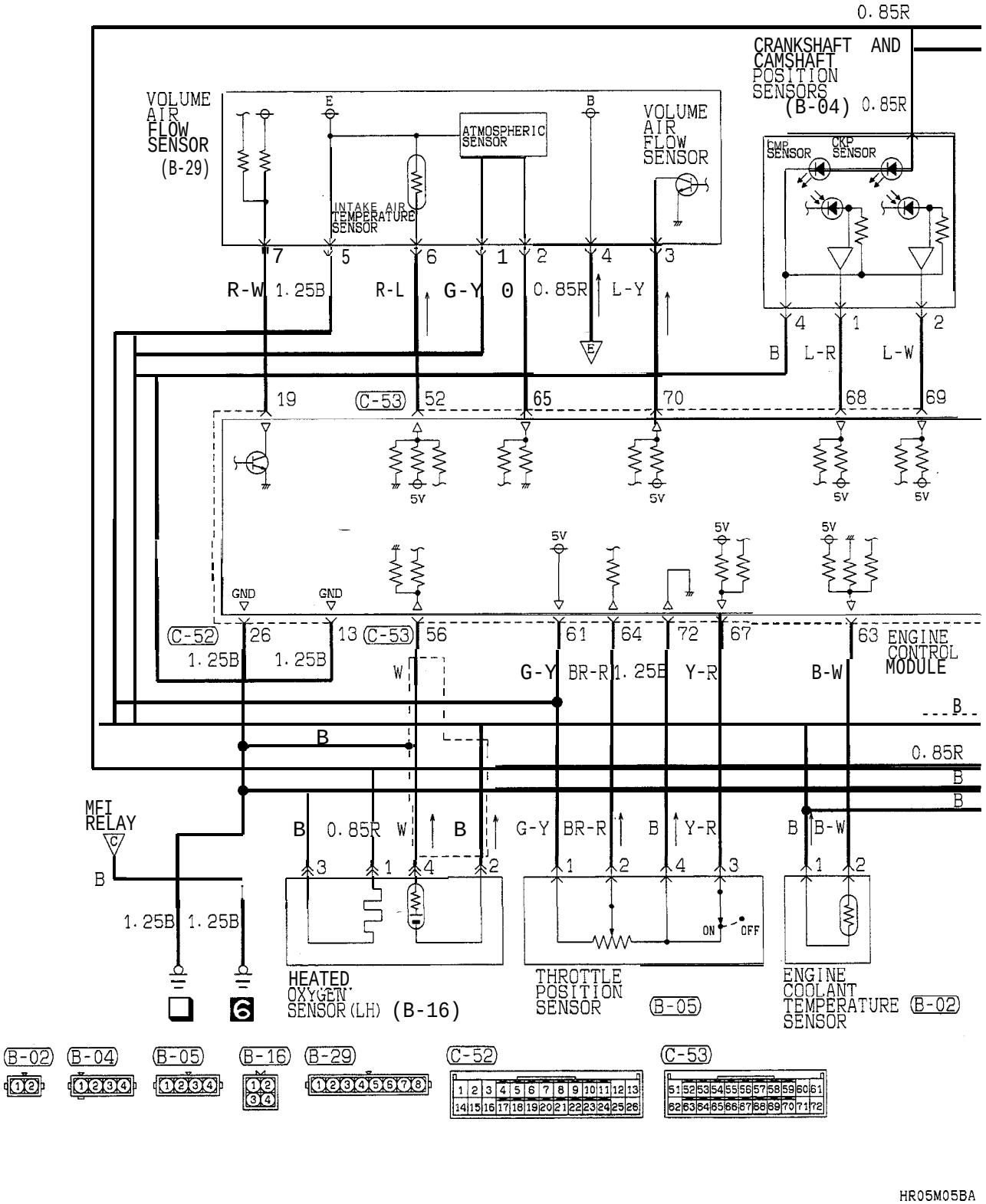

TSB Revision

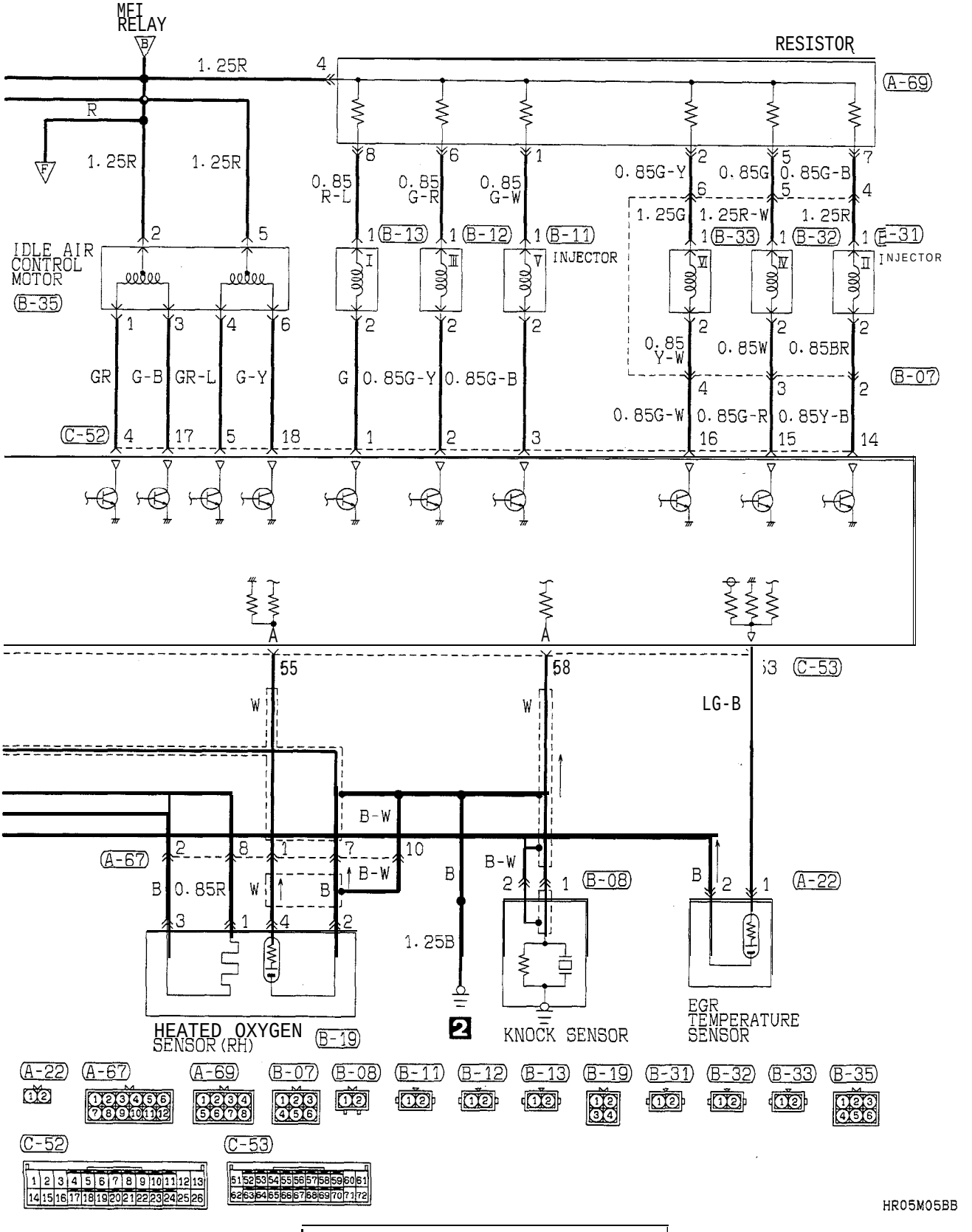
MFI RELAY
RESISTOR
A-69
1.25R
R
1.25R
1.25R
0.85 R-L
0.85 G-R
0.85 G-W
0.85G-Y
0.85G
0.85G-B
1.25G
1.25R-W
1.25R
B-13
B-12
B-11
B-33
B-32
E-31
INJECTOR
INJECTOR
IDLE AIR CONTROL MOTOR
B-35
GR
G-B
GR-L
G-Y
G
0.85G-Y
0.85G-B
0.85 Y-W
0.85W
0.85BR
B-07
0.85G-W
0.85G-R
0.85Y-B
C-52
C-53
LG-B
B-W
A-67
0.85R
B-W
B
1.25B
B-08
A-22
HEATED OXYGEN SENSOR (RH)
B-19
KNOCK SENSOR
EGR TEMPERATURE SENSOR
A-22
A-67
A-69
B-07
B-08
B-11
B-12
B-13
B-19
B-31
B-32
B-33
B-35
C-52
C-53
HR05M05BB

MFI CIRCUIT (1992 MODEL) <TURBO> (CONTINUED)

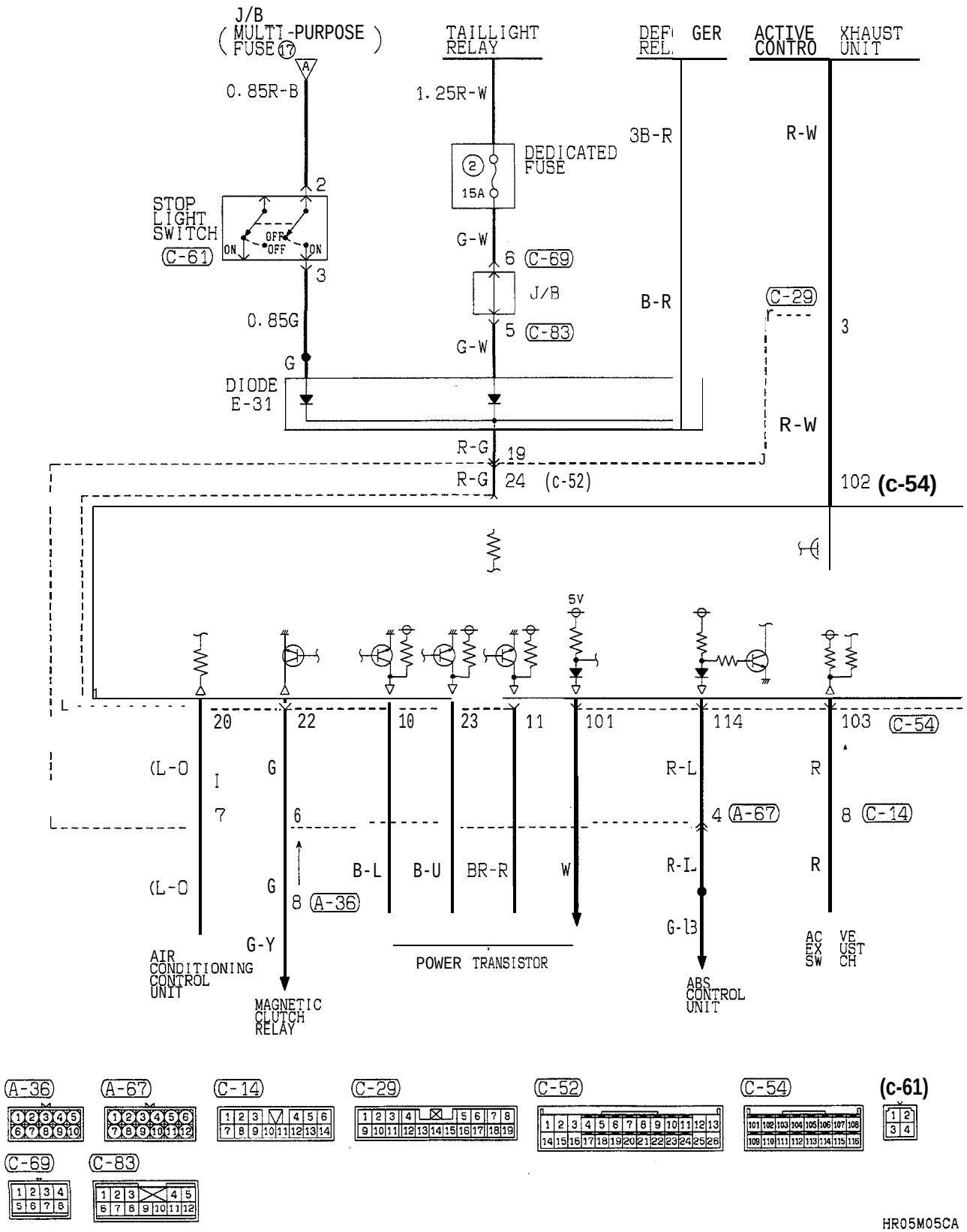

TSB Revision

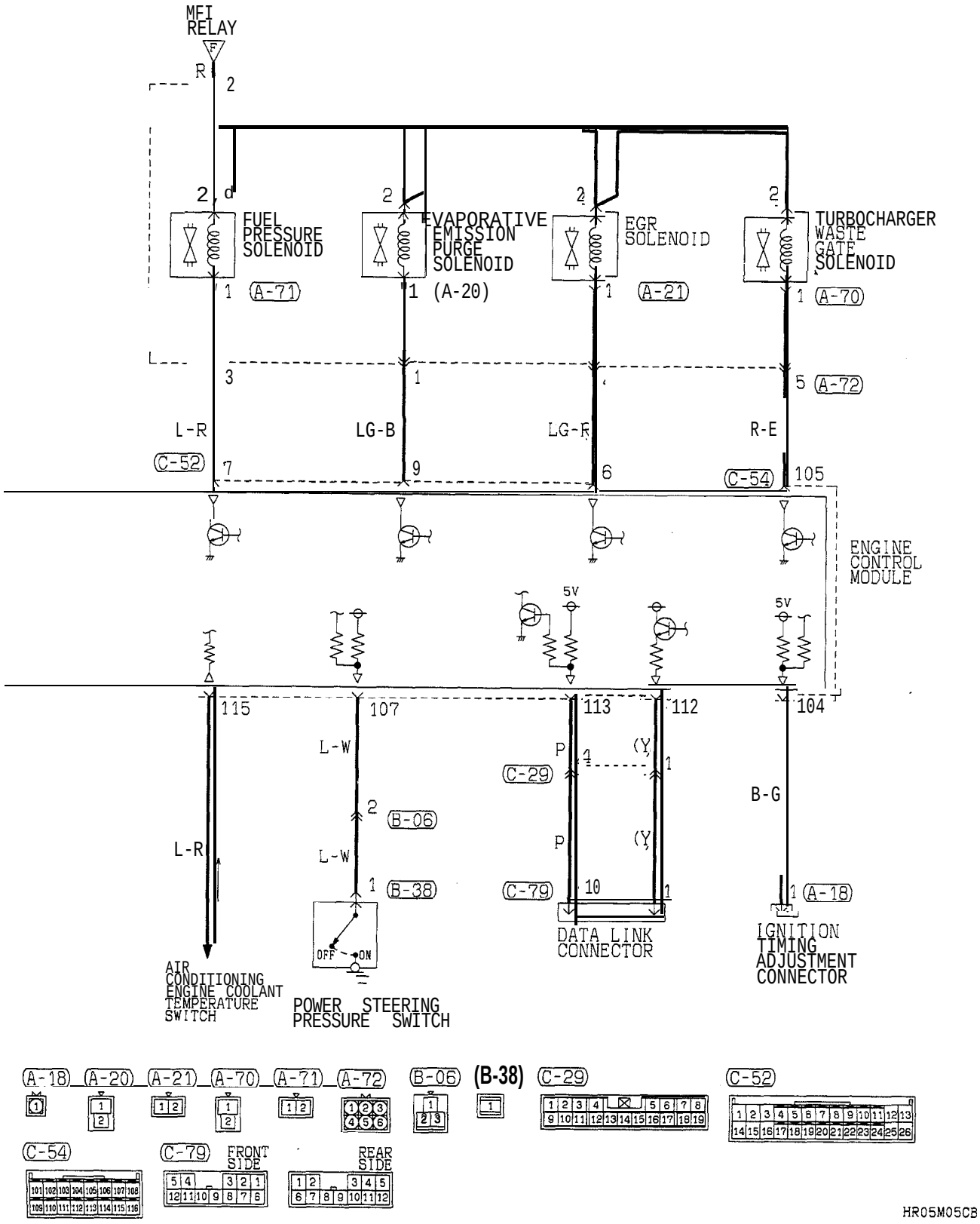

TSB Revision

MFI CIRCUIT (1993 MODELS)

<NON TURBO>

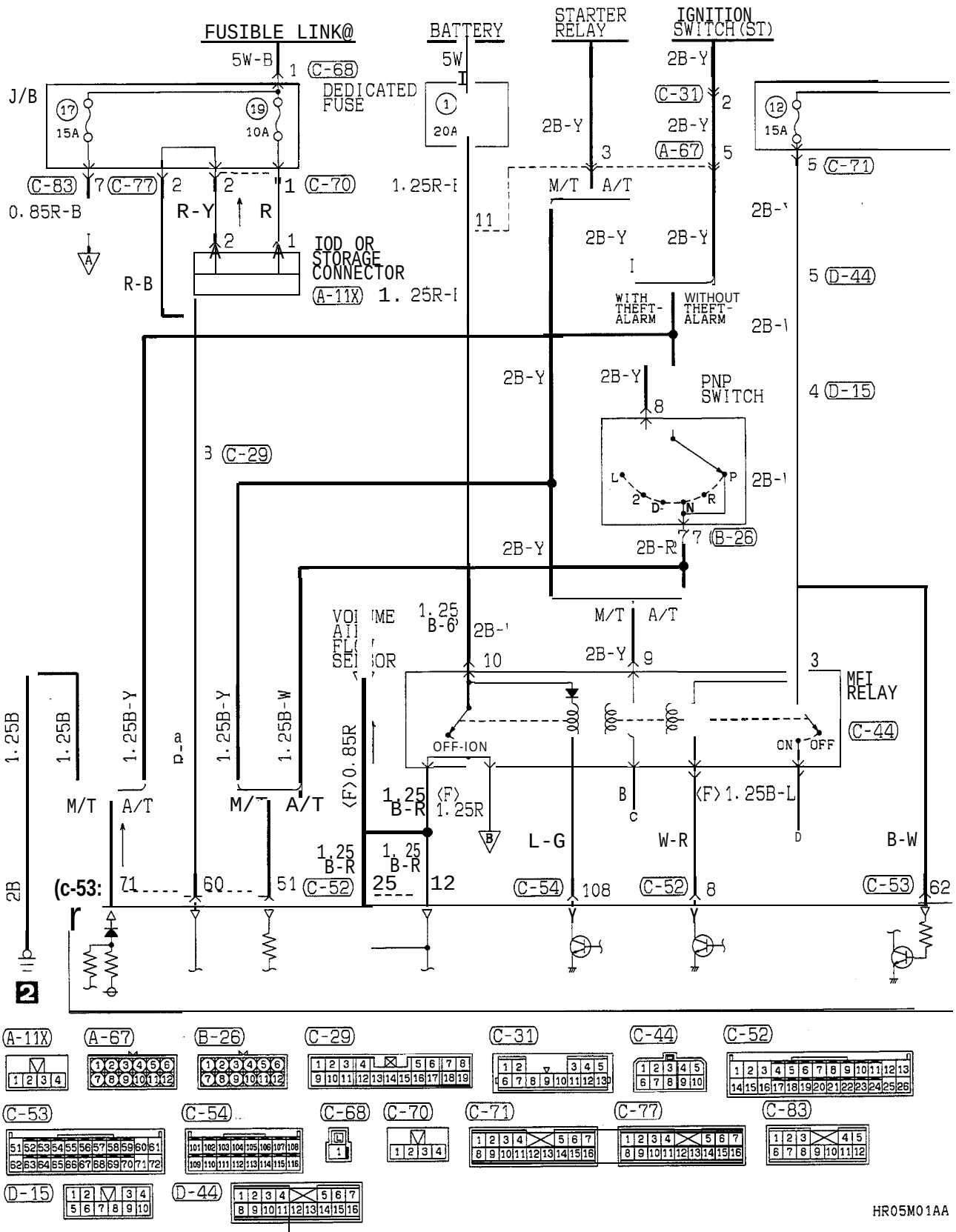

TSB Revision

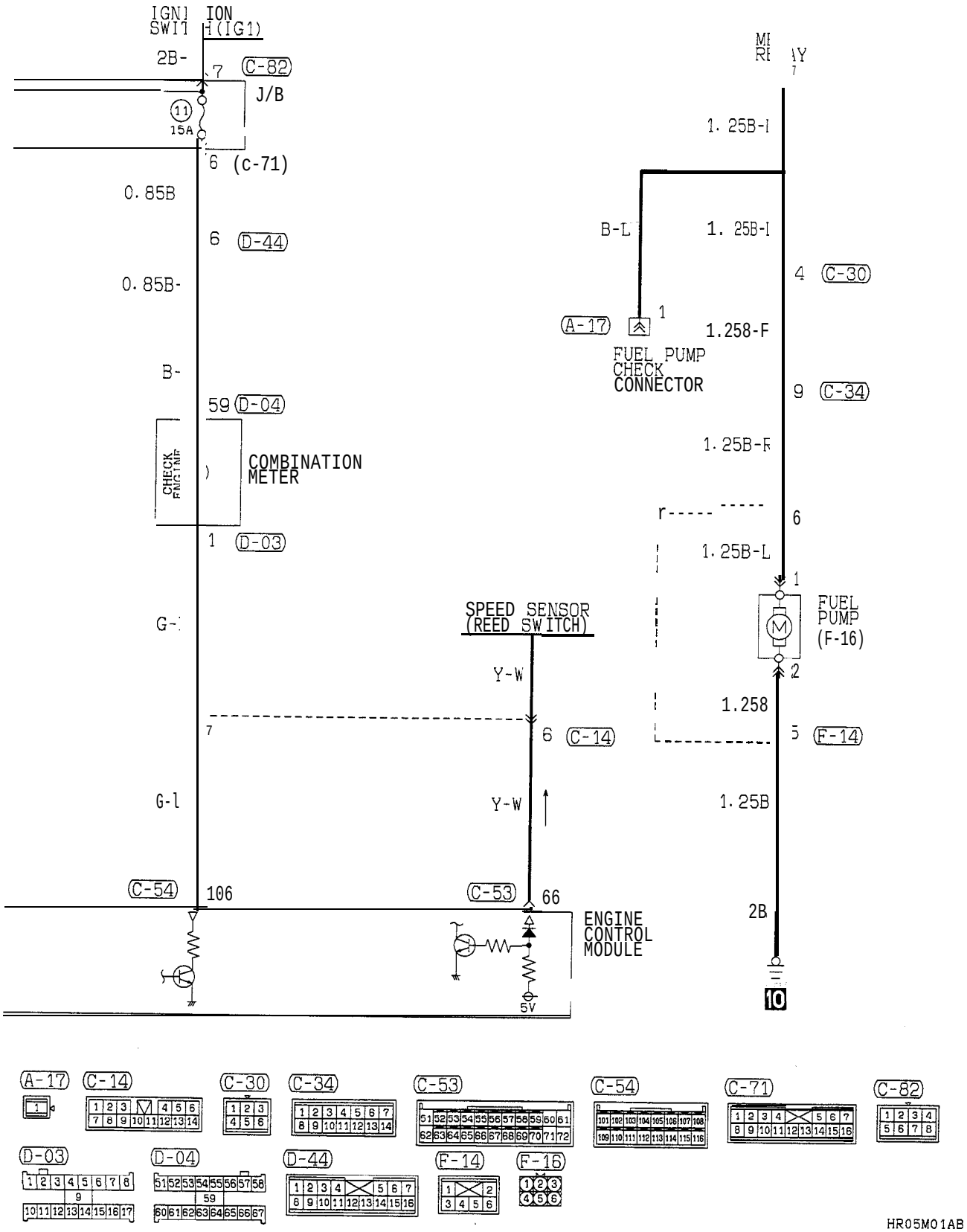

HR05M01AB

TSB Revision

MFI CIRCUIT (1993 MODELS) <NON TURBO> (CONTINUED)

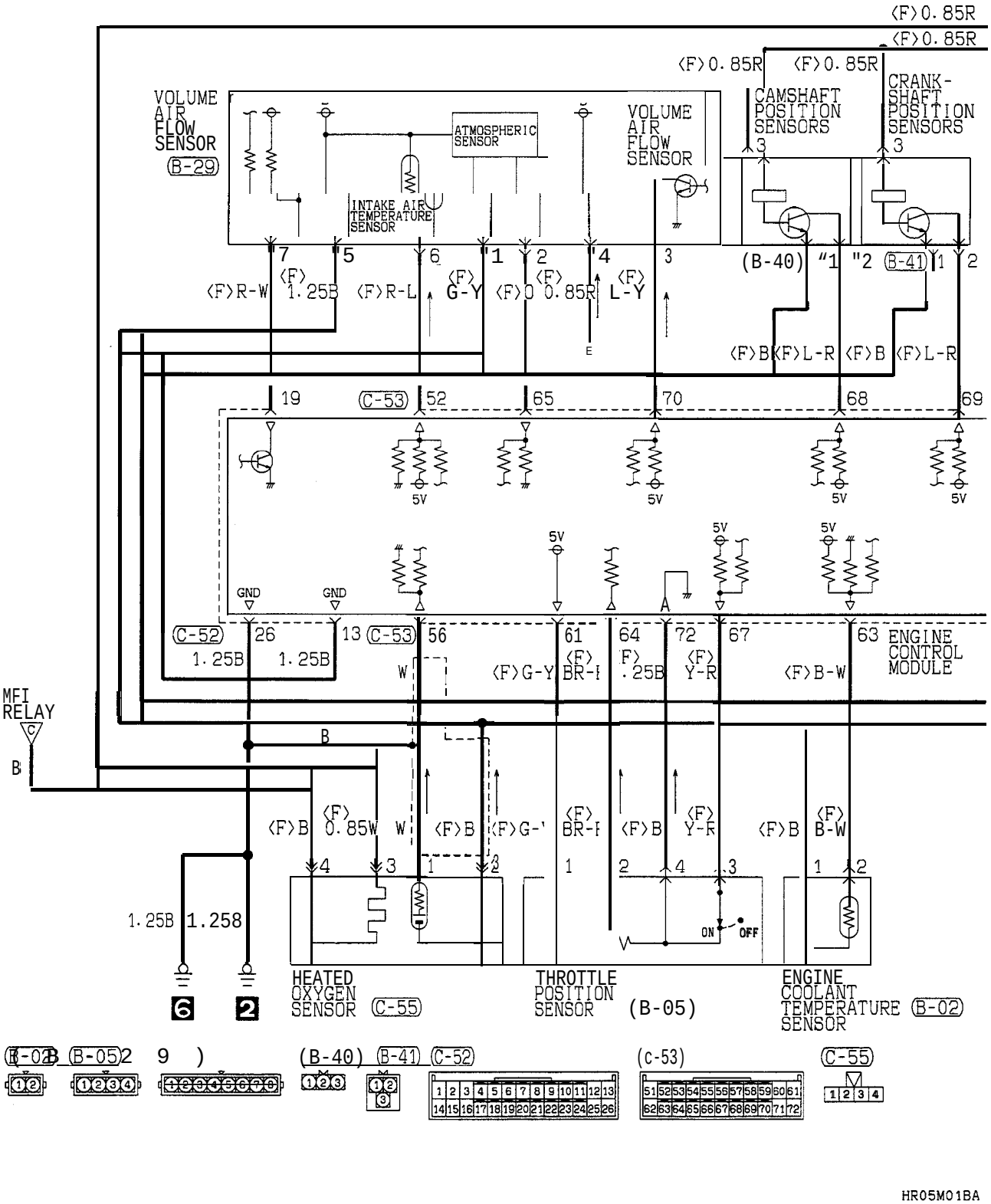

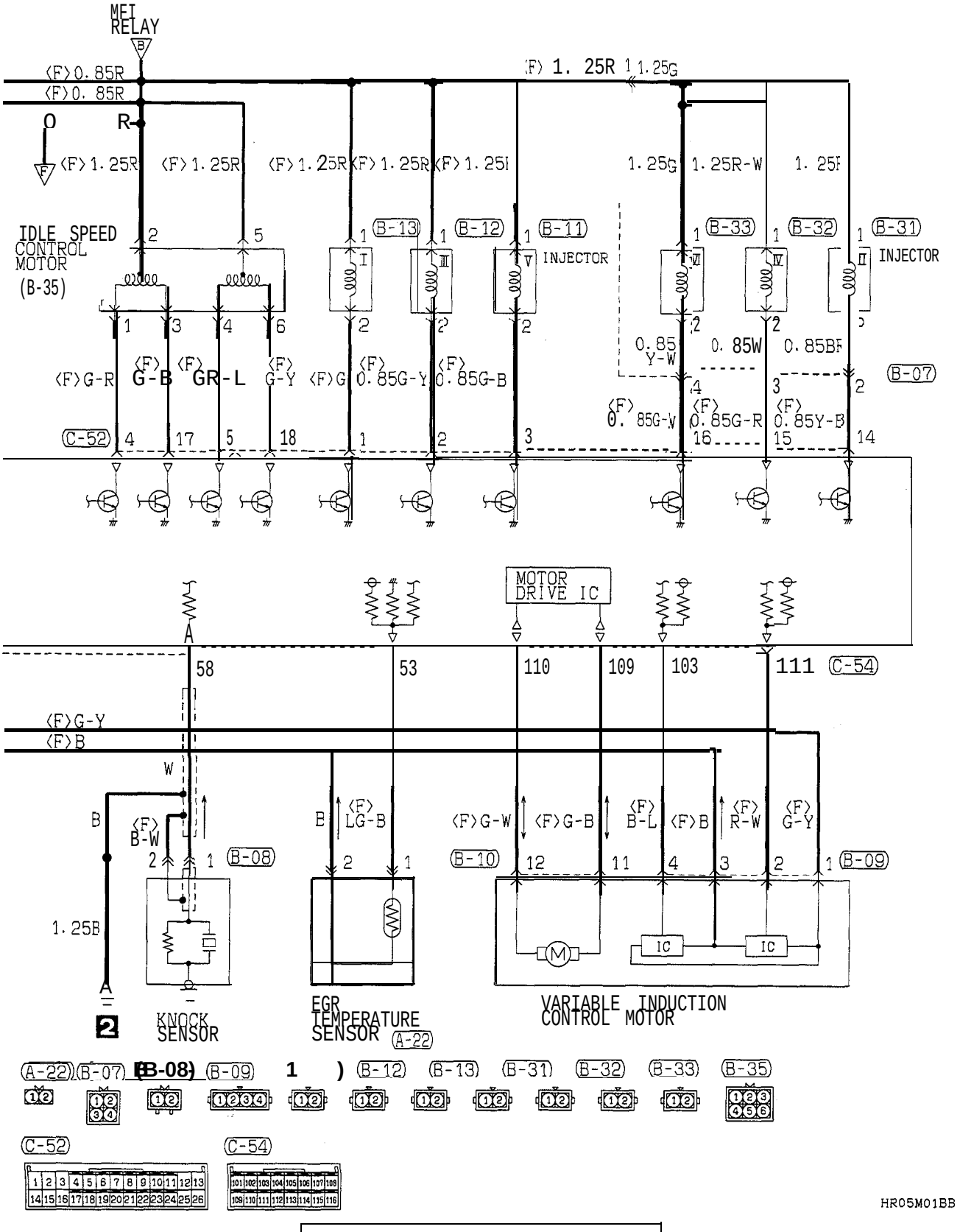
MFI RELAY
IDLE SPEED CONTROL MOTOR (B-35)
INJECTOR
INJECTOR
MOTOR DRIVE IC
KNOCK SENSOR
EGR TEMPERATURE SENSOR (A-22)
VARIABLE INDUCTION CONTROL MOTOR
(A-22) (B-07) (B-08) (B-09) (B-10) (B-12) (B-13) (B-31) (B-32) (B-33) (B-35)
(C-52)
(C-54)
HR05M01BB

MFI CIRCUIT (1993 MODELS) <NON TURBO> (CONTINUED)

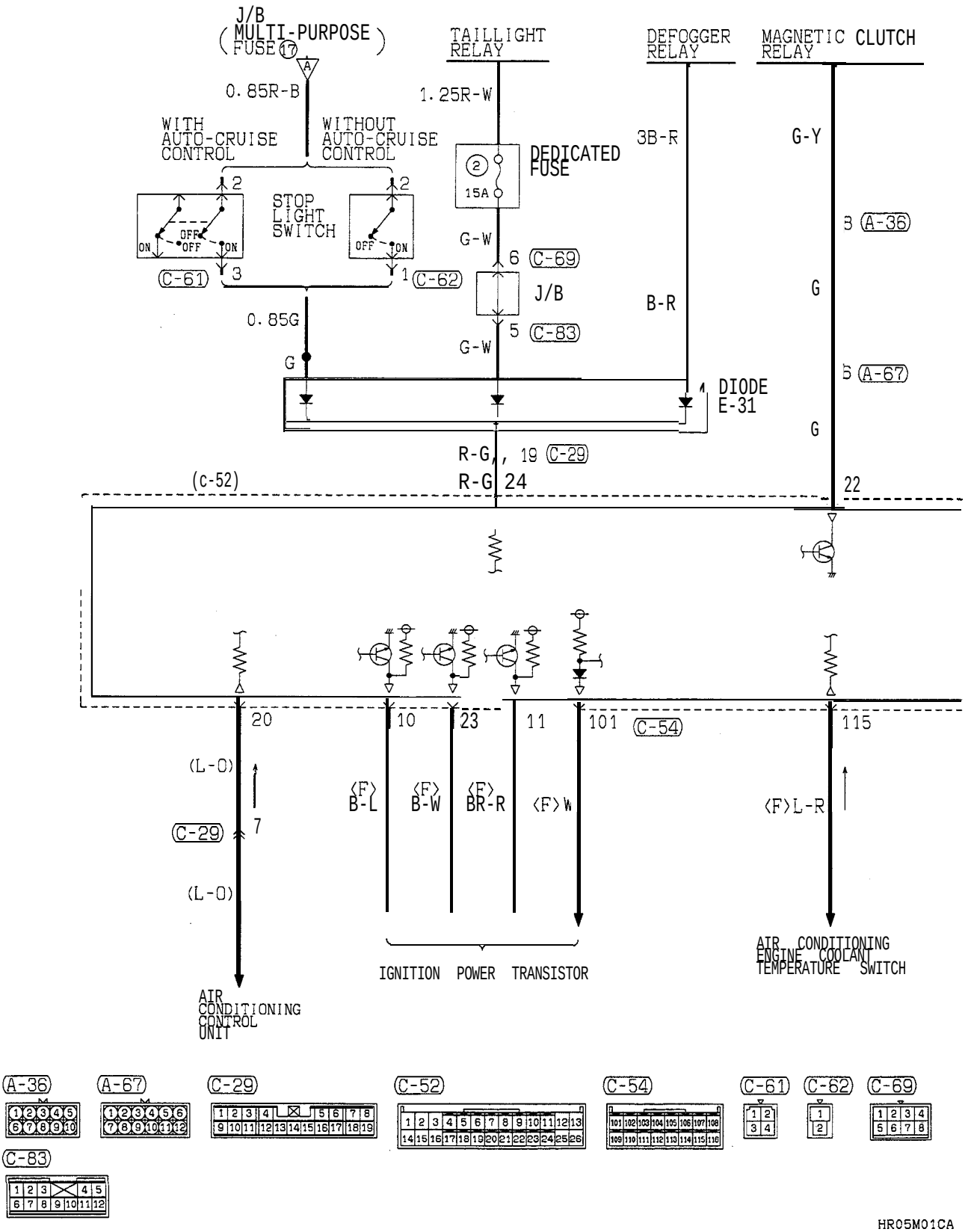

TSB Revision

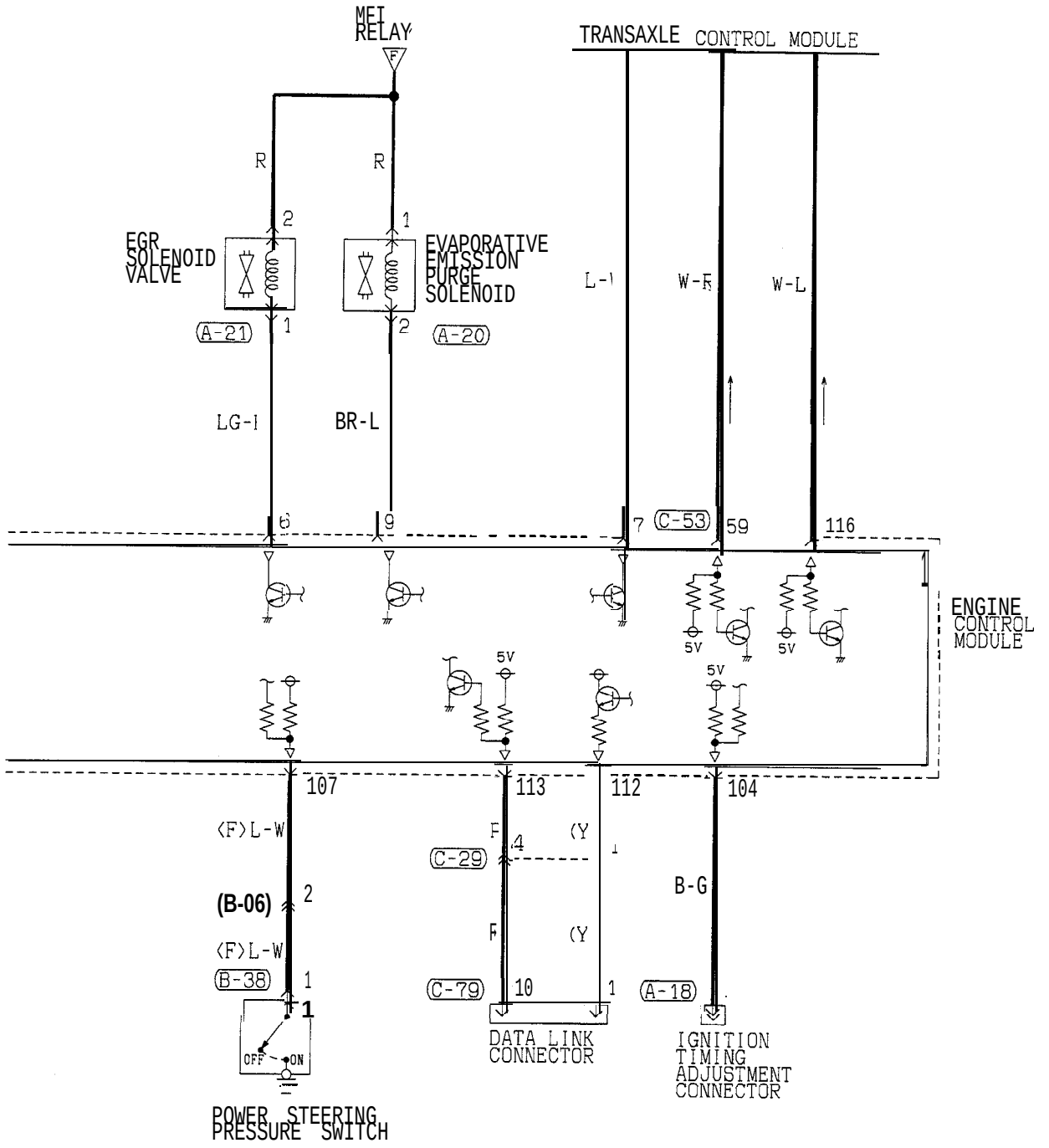

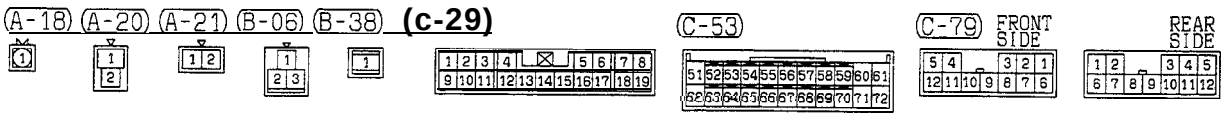

HR05M01CB

TSB Revision

MFI CIRCUIT (1993 MODELS)

<TURBO>

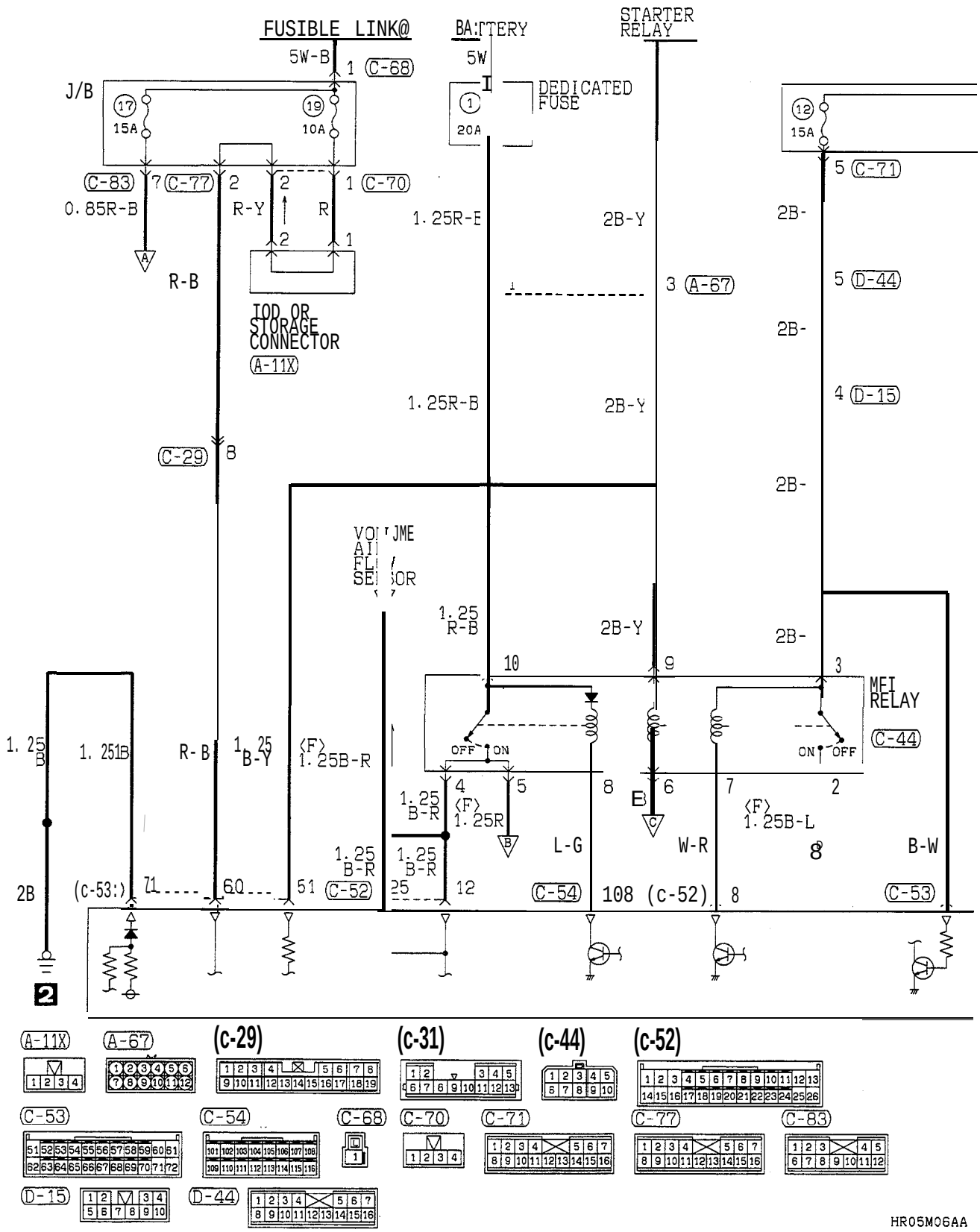

TSB Revision

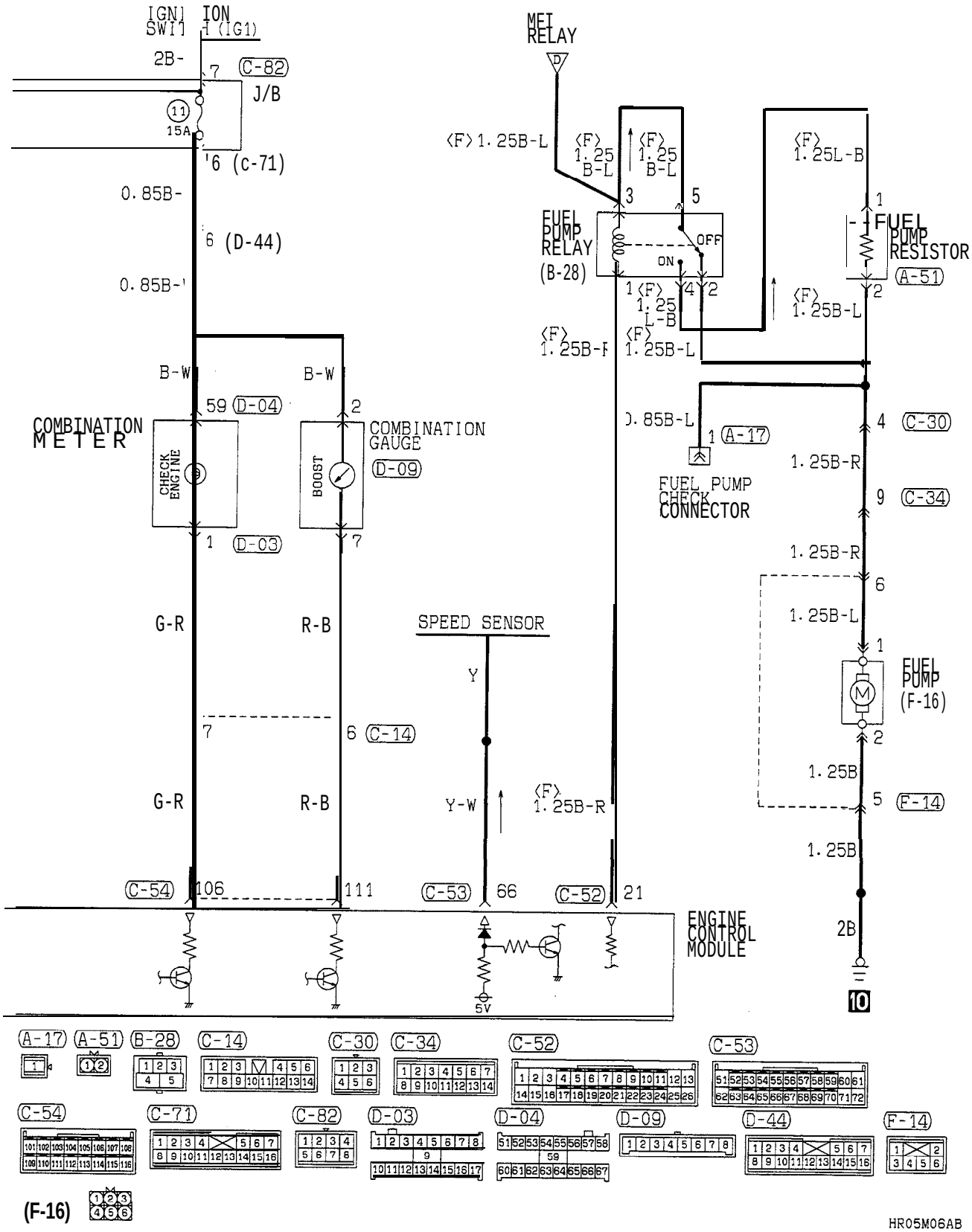

TSB Revision

MFI CIRCUIT (1993 MODELS) <TURBO> (CONTINUED)

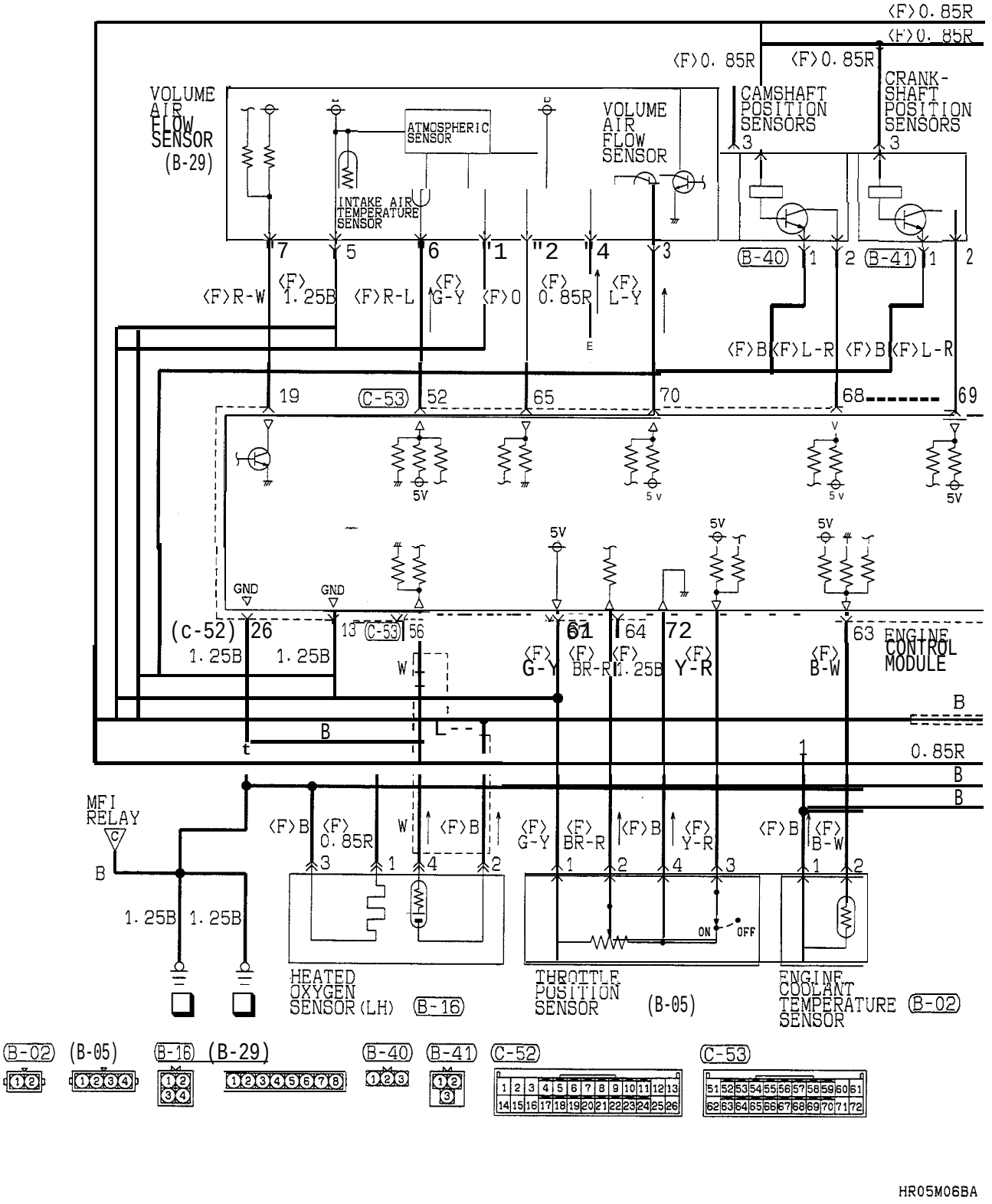

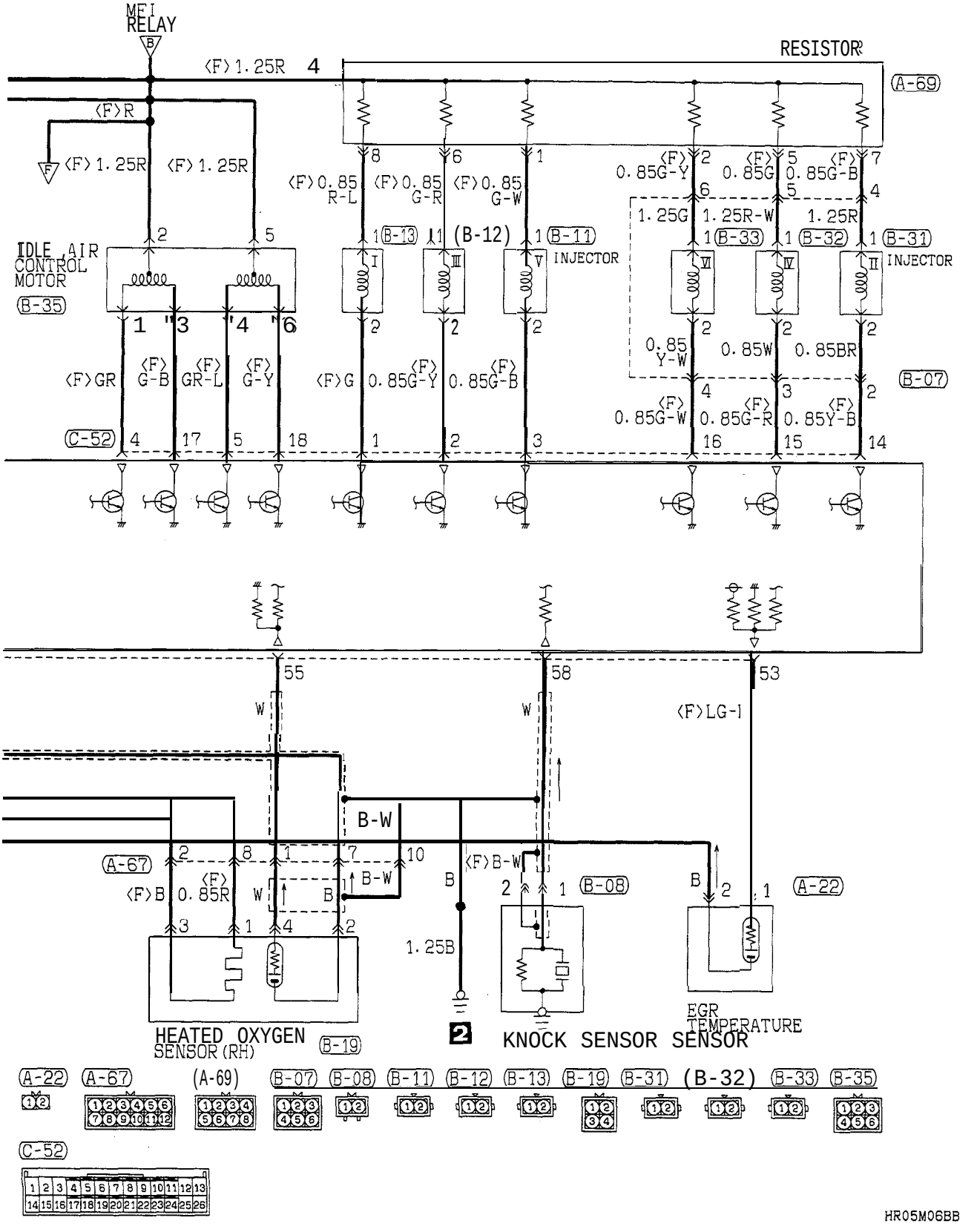
MFI RELAY
RESISTOR
(A-69)
IDLE AIR CONTROL MOTOR
(B-35)
INJECTOR
INJECTOR
(B-07)
(C-52)
(A-67)
HEATED OXYGEN SENSOR (RH)
(B-19)
KNOCK SENSOR
(B-08)
EGR TEMPERATURE SENSOR
(A-22)
(A-22) (A-67) (A-69) (B-07) (B-08) (B-11) (B-12) (B-13) (B-19) (B-31) (B-32) (B-33) (B-35)
(C-52)
HR05M06BB

MFI CIRCUIT (1993 MODELS) <TURBO> (CONTINUED)

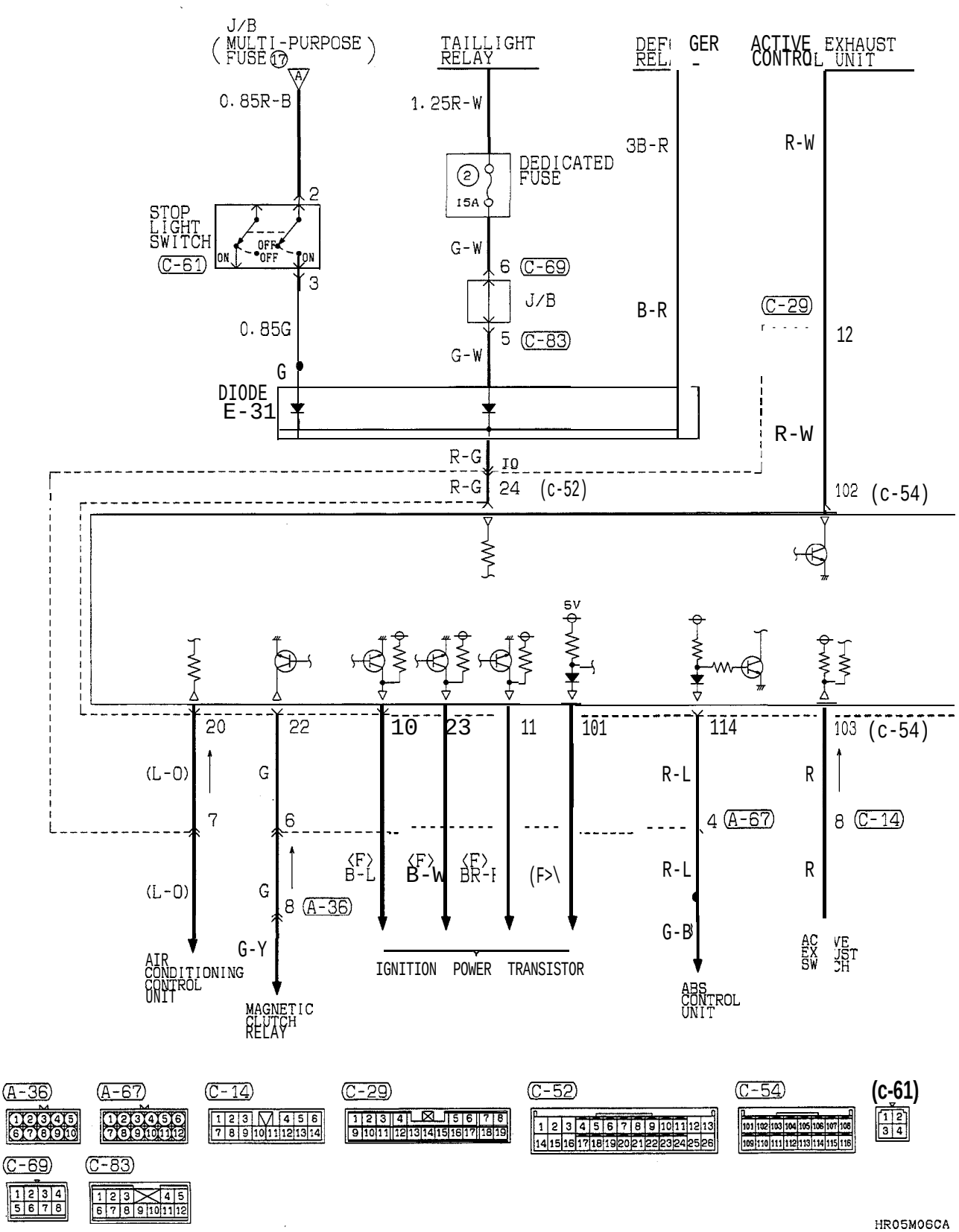

TSB Revision

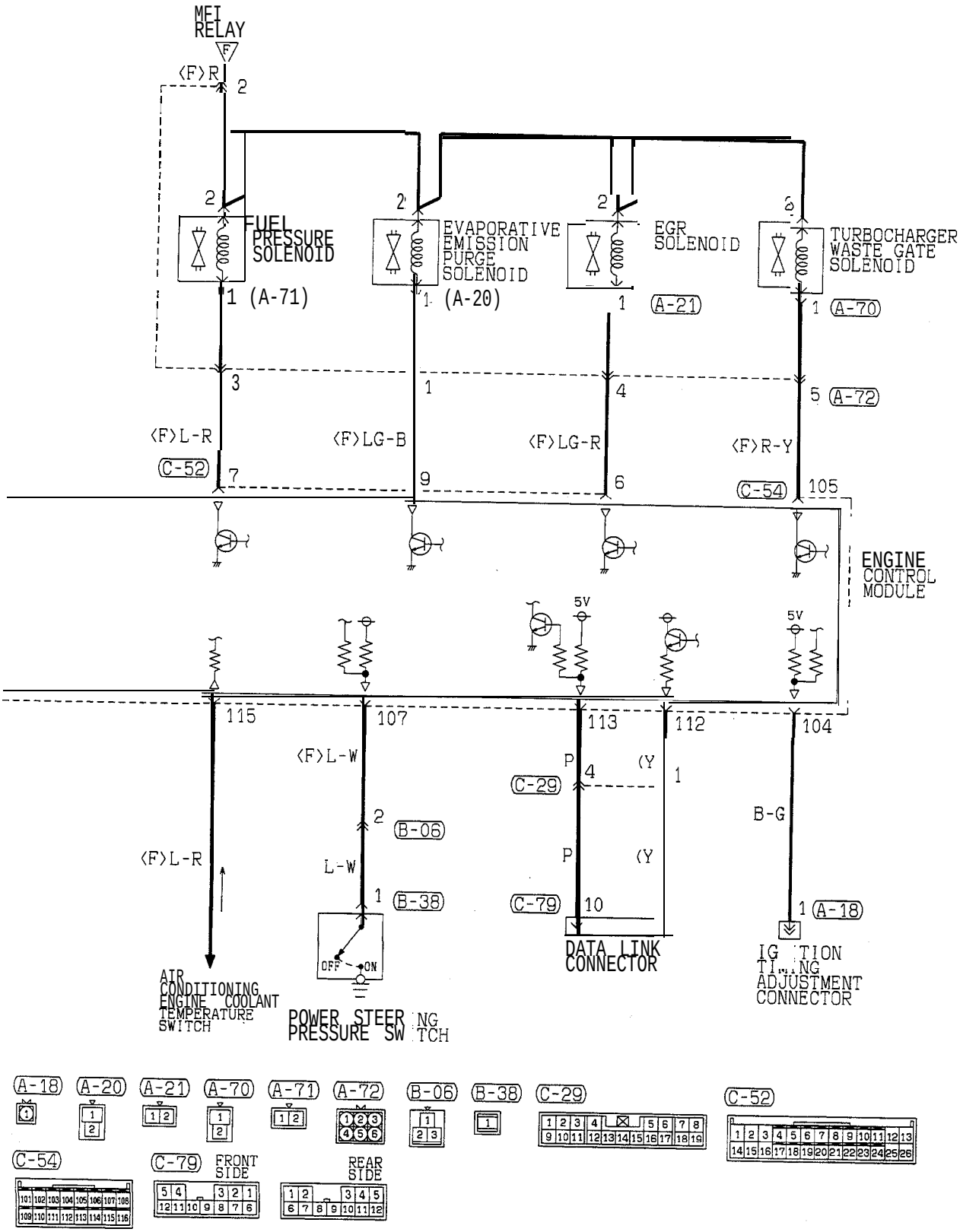
MFI RELAY
F
<F>R
2
FUEL PRESSURE SOLENOID
1 (A-71)
EVAPORATIVE EMISSION PURGE SOLENOID
1 (A-20)
EGR SOLENOID
1 A-21
TURBOCHARGER WASTE GATE SOLENOID
1 A-70
3
1
4
5 A-72
<F>L-R
C-52
7
<F>LG-B
9
<F>LG-R
6
<F>R-Y
C-54
105
ENGINE CONTROL MODULE
5V
5V
115
107
113
112
104
<F>L-W
P
4
(Y
1
C-29
2
B-06
B-G
<F>L-R
L-W
P
(Y
1
B-38
C-79
10
1 A-18
OFF
ON
DATA LINK CONNECTOR
AIR CONDITIONING ENGINE COOLANT TEMPERATURE SWITCH
POWER STEERING PRESSURE SWITCH
IGNITION TIMING ADJUSTMENT CONNECTOR
A-18
A-20
A-21
A-70
A-71
A-72
B-06
B-38
C-29
C-52
C-54
C-79
FRONT SIDE
REAR SIDE
HR05M06CB

MFI CIRCUIT (1994 MODELS)

<NON TURBO>

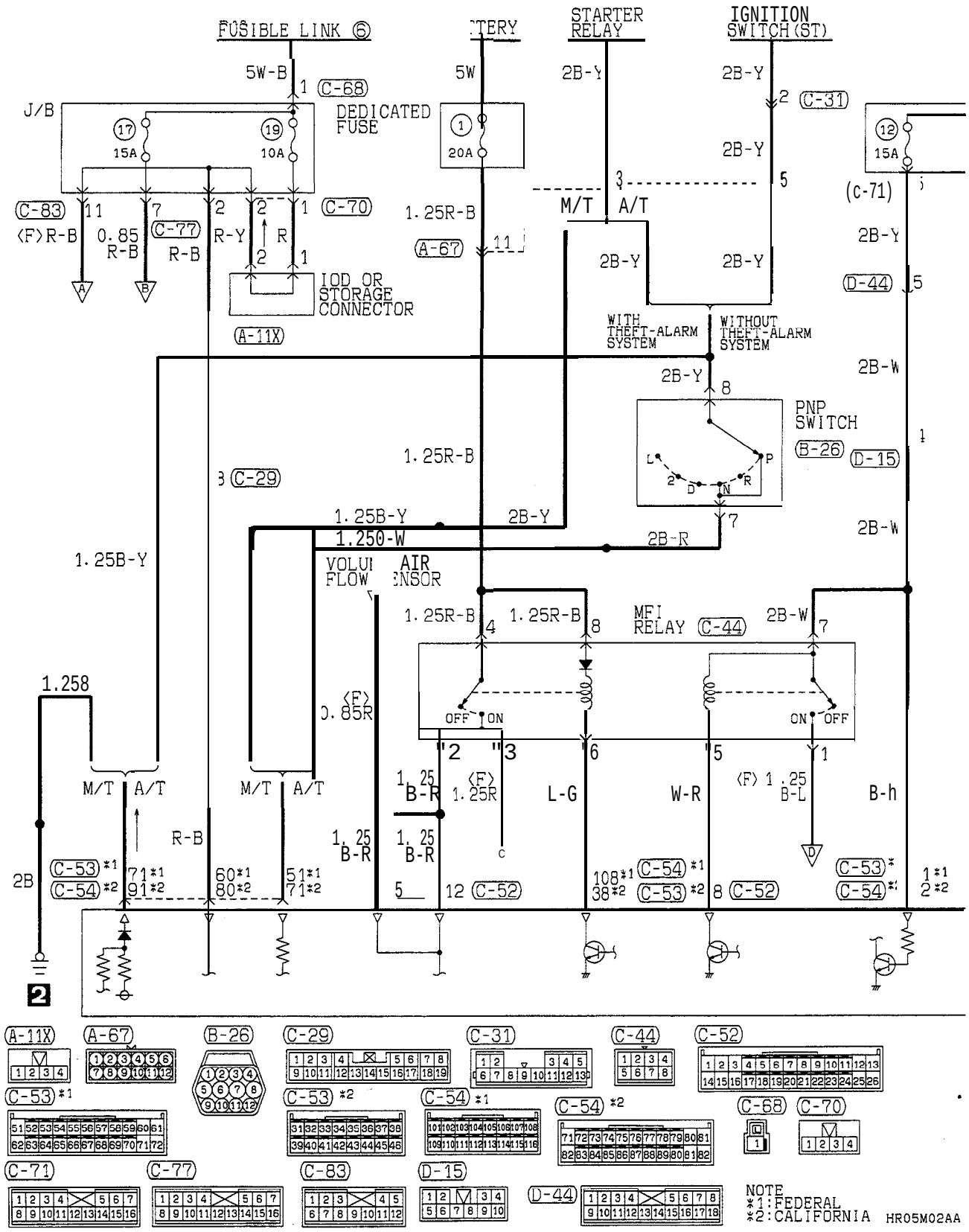

TSB Revision

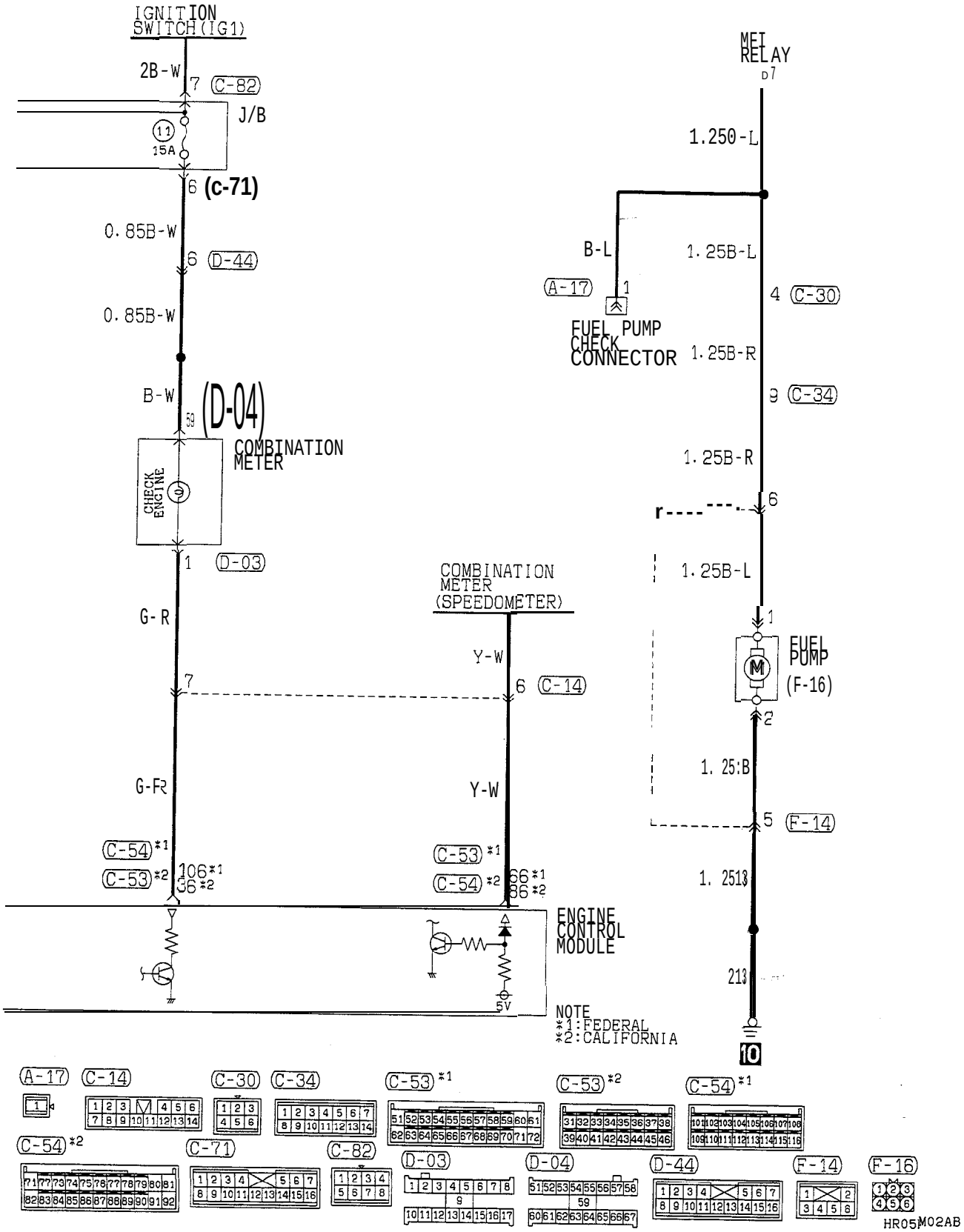

TSB Revision

MFI CIRCUIT (1994 MODELS) <NON TURBO> (CONTINUED)

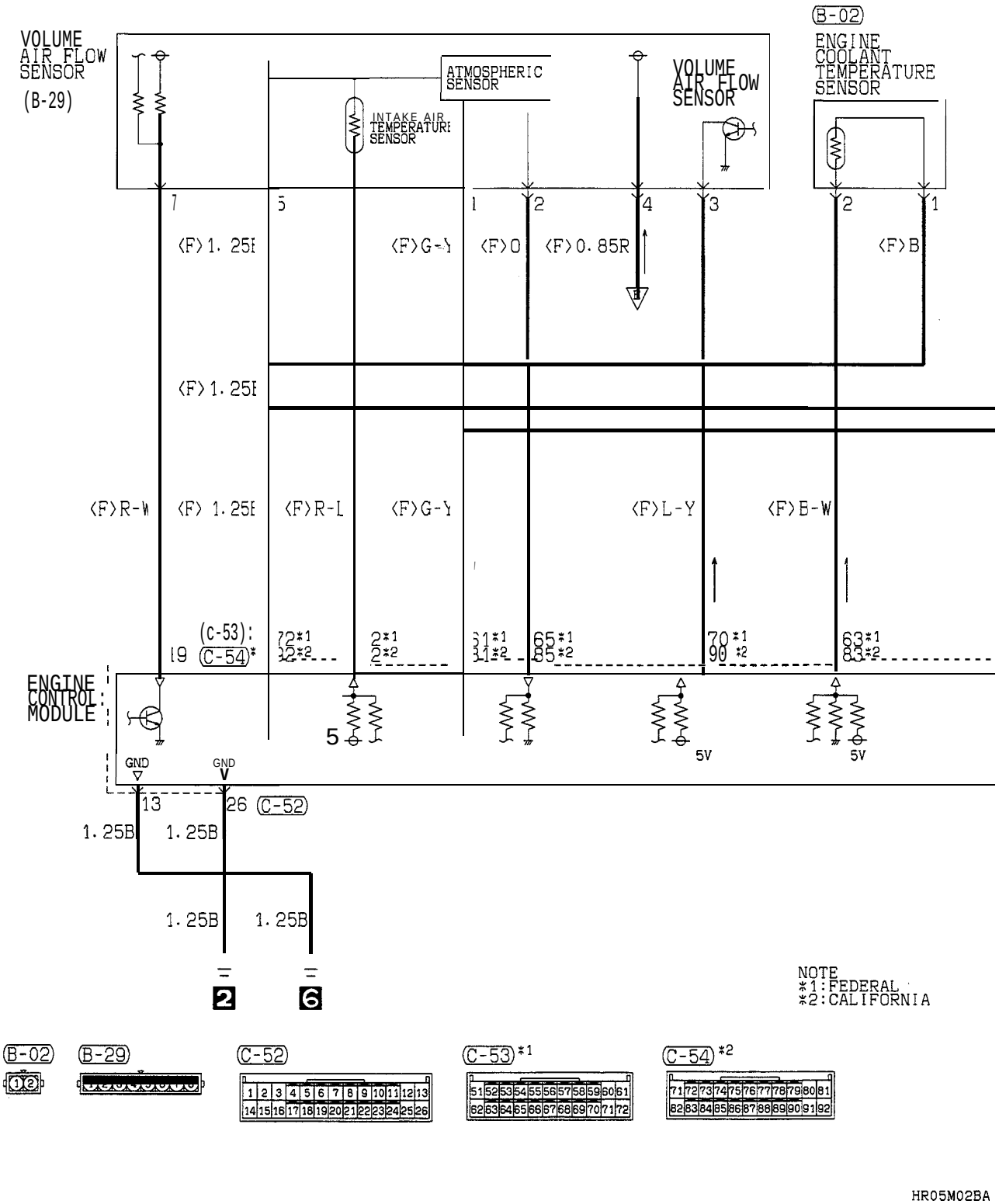

HR05M02BA

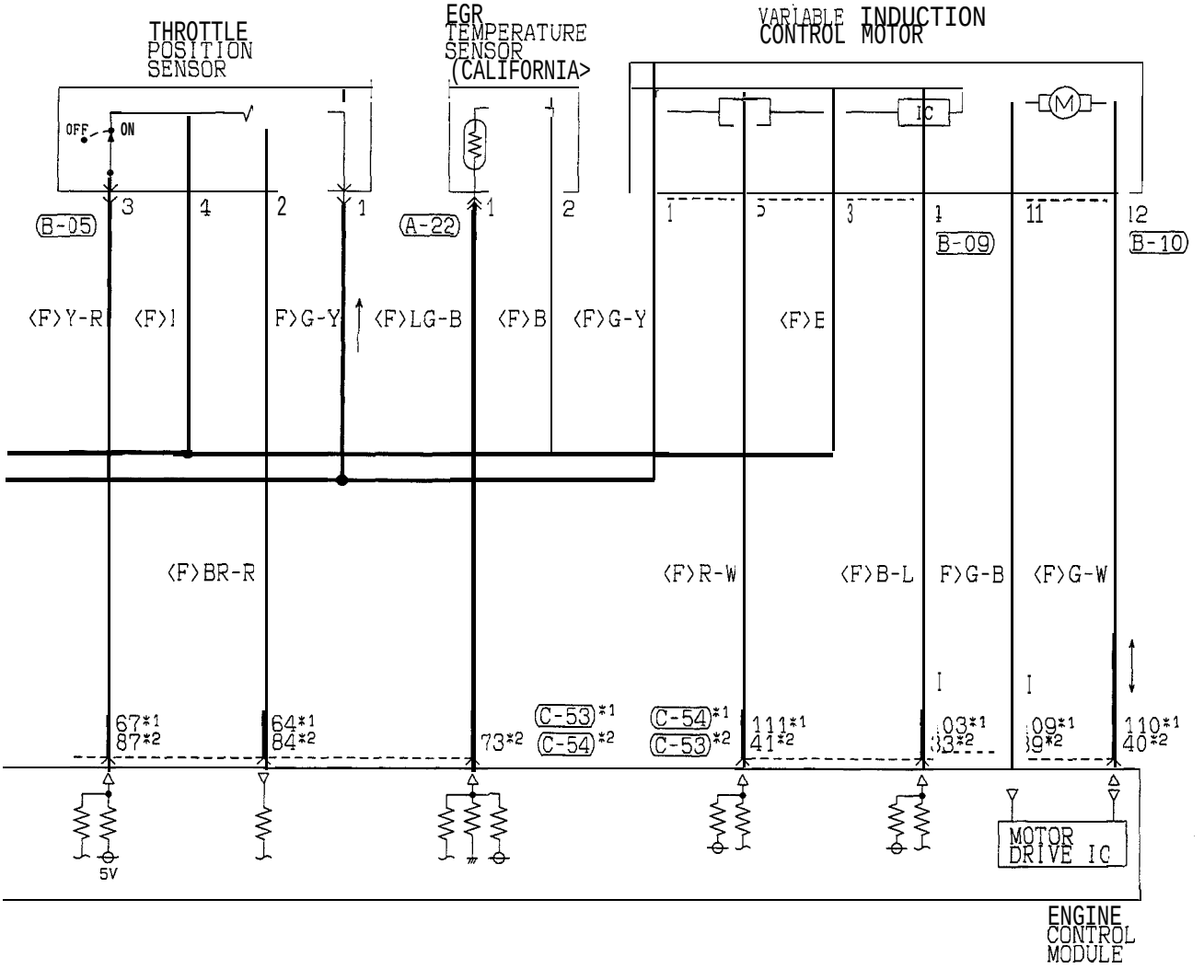

NOTE
*1: FEDERAL
*2: CALIFORNIA

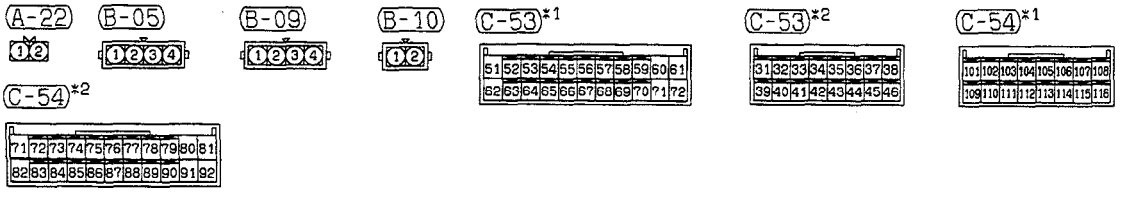

HR05M02BB

TSB Revision

MFI CIRCUIT (1994 MODELS) <NON TURBO> (CONTINUED)

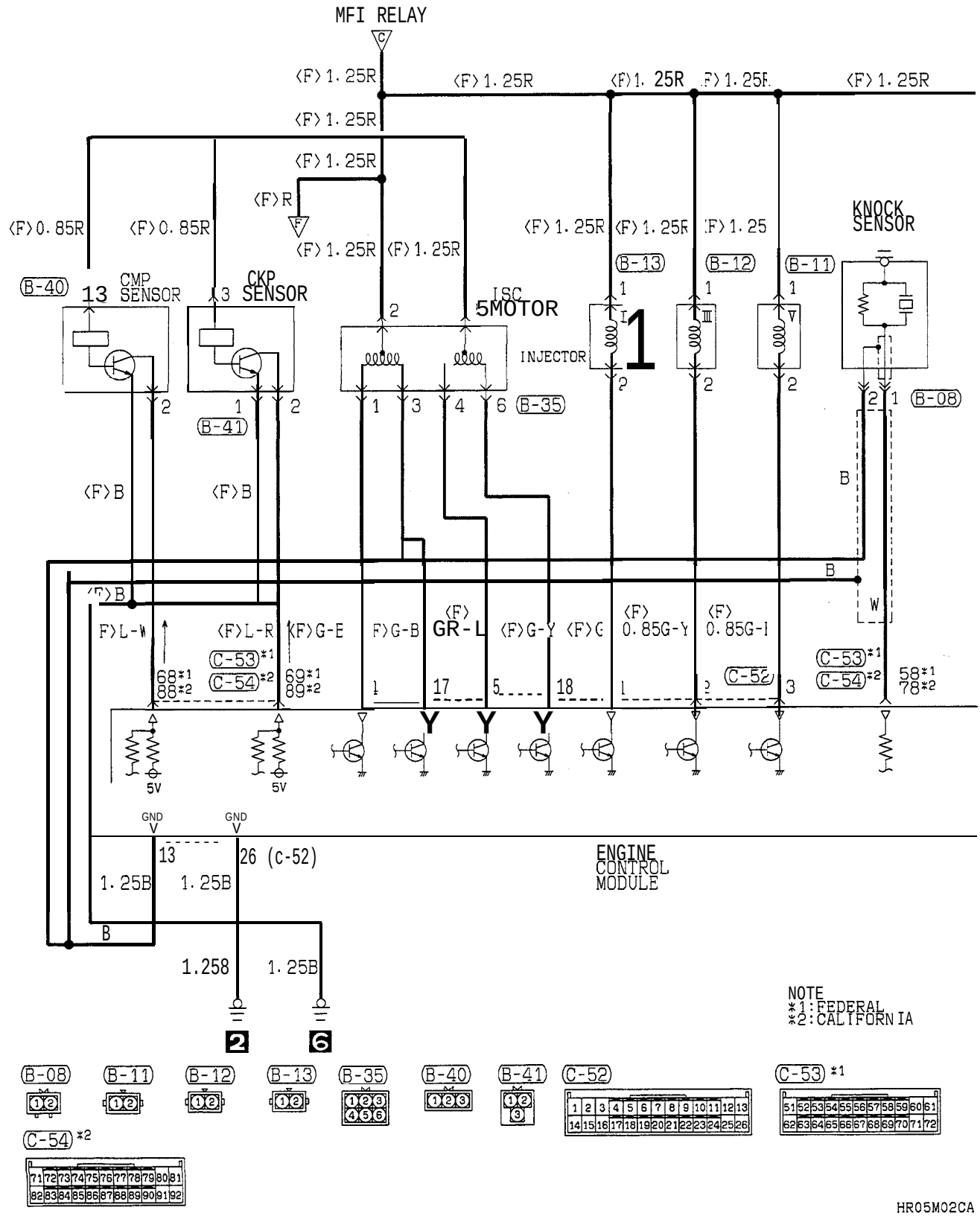

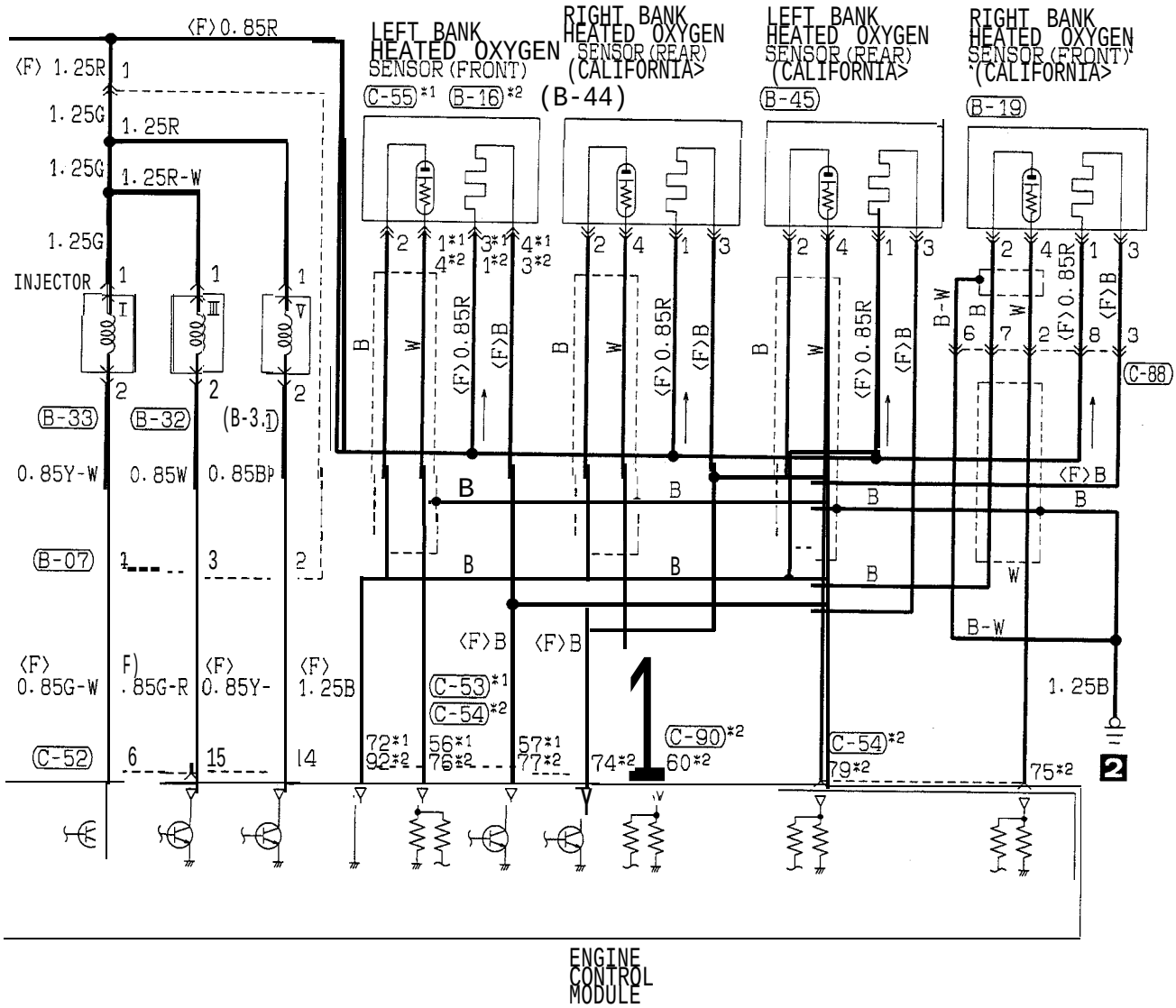

NOTE
*1: FEDERAL
*2: CALIFORNIA

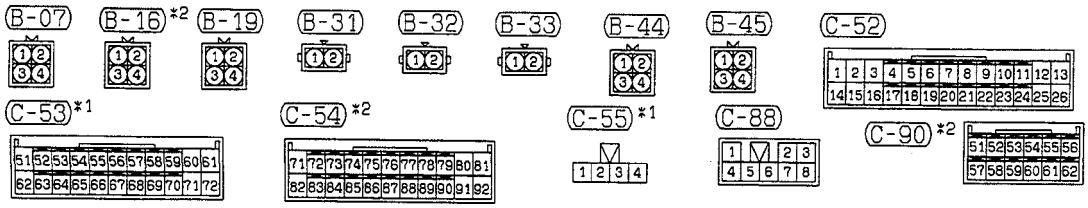

HR05M02CB

TSB Revision

MFI CIRCUIT (1994 MODELS) <NON TURBO> (CONTINUED)

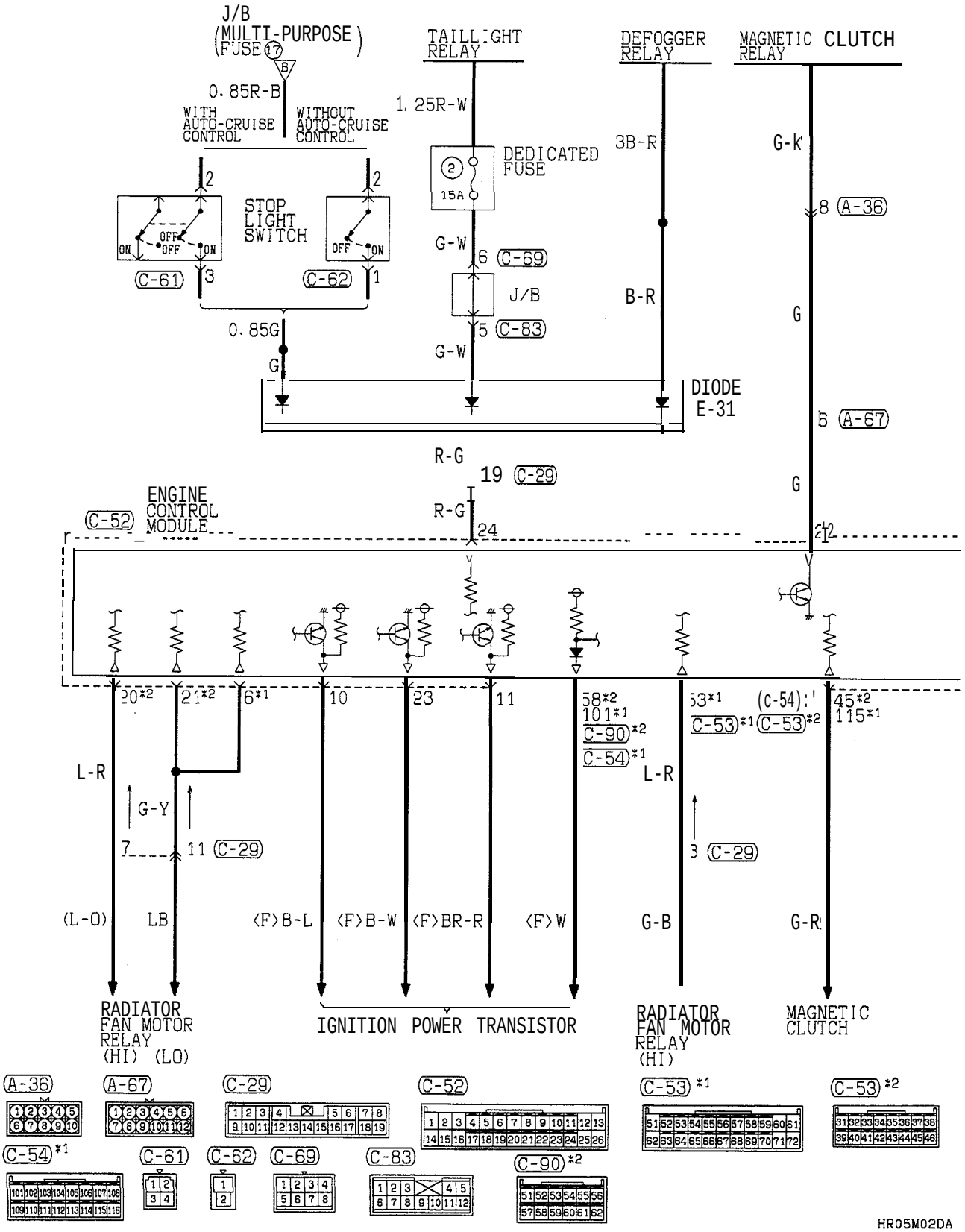

TSB Revision

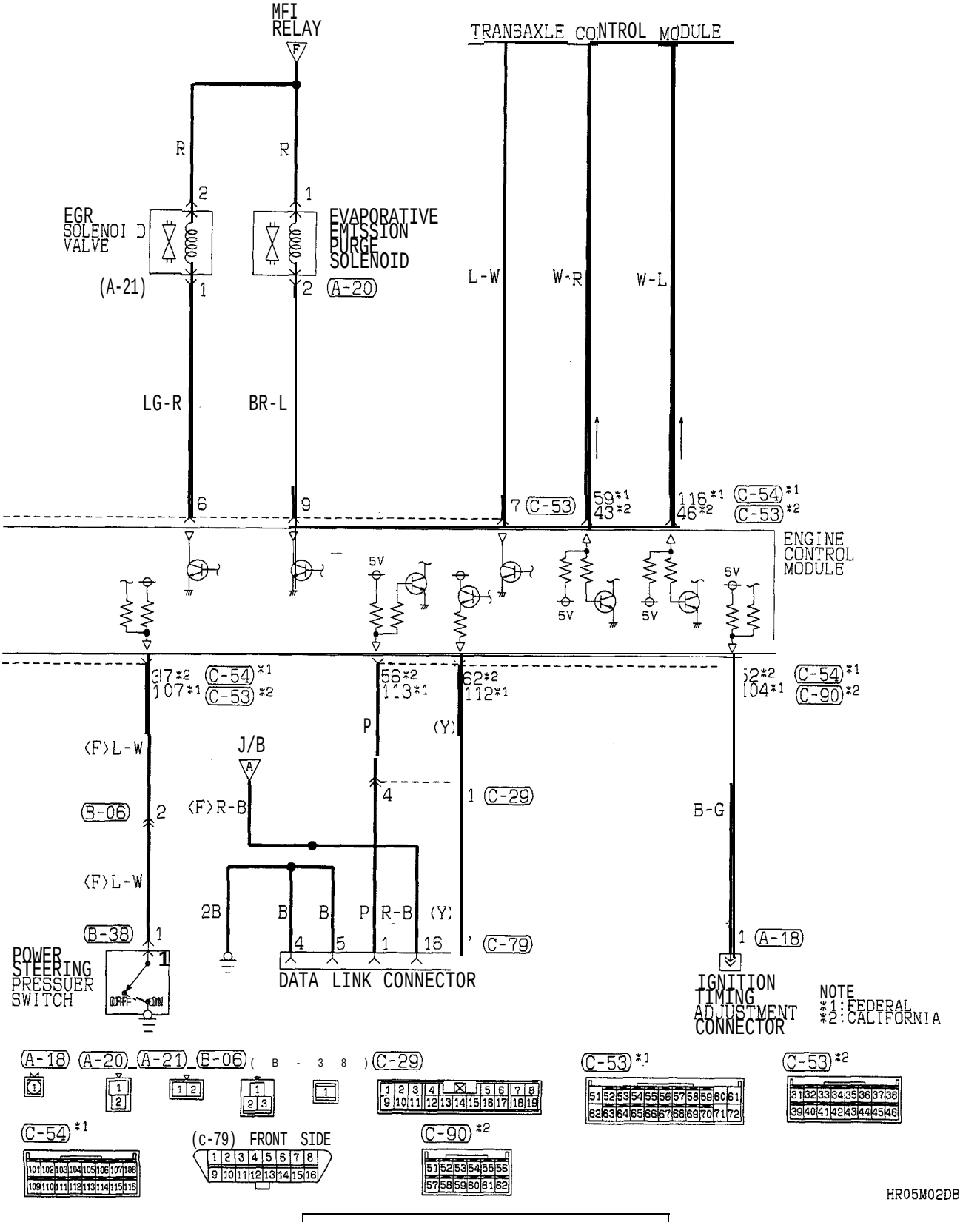

TSB Revision

MFI CIRCUIT (1994 MODELS)

<TURBO>

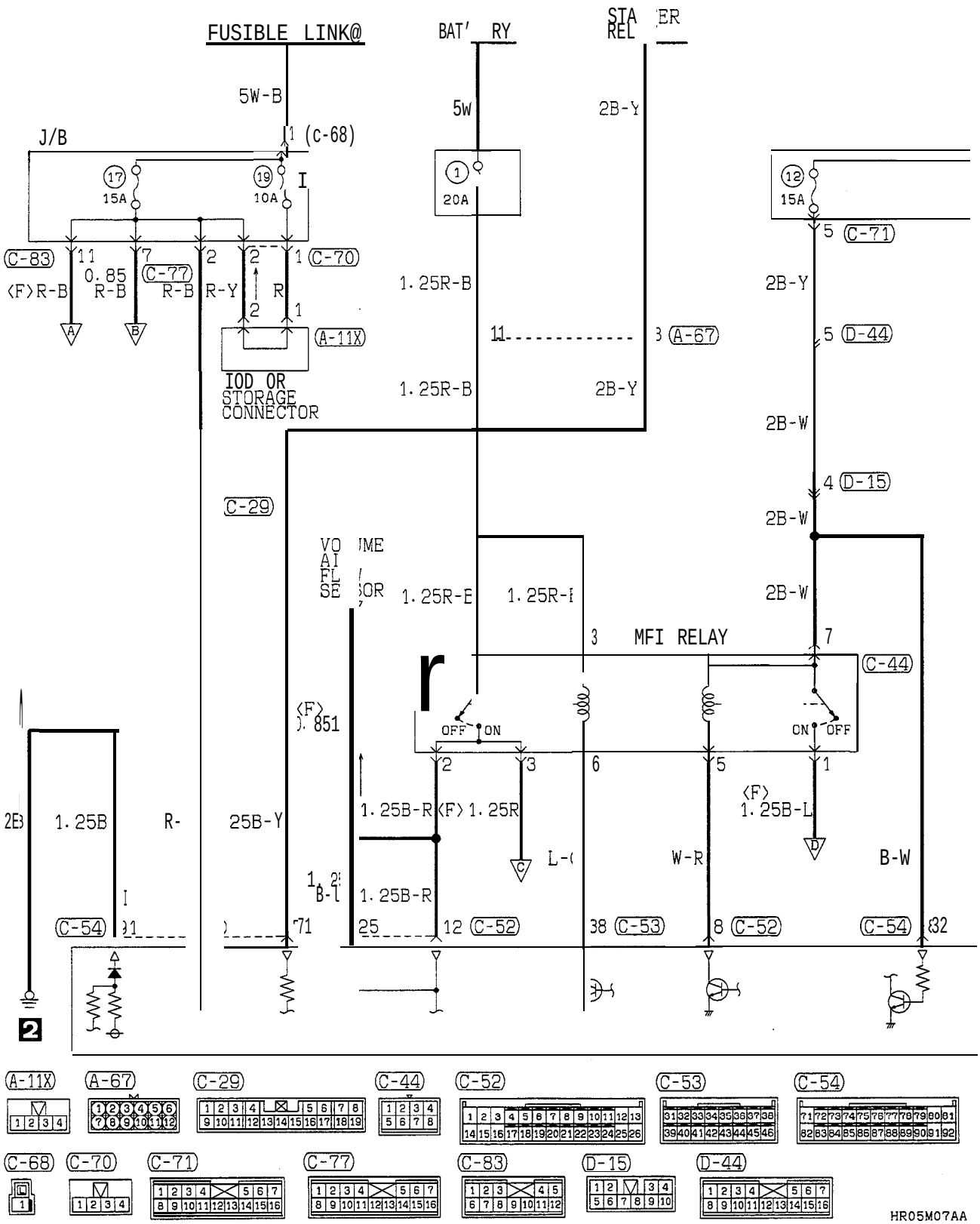

TSB Revision

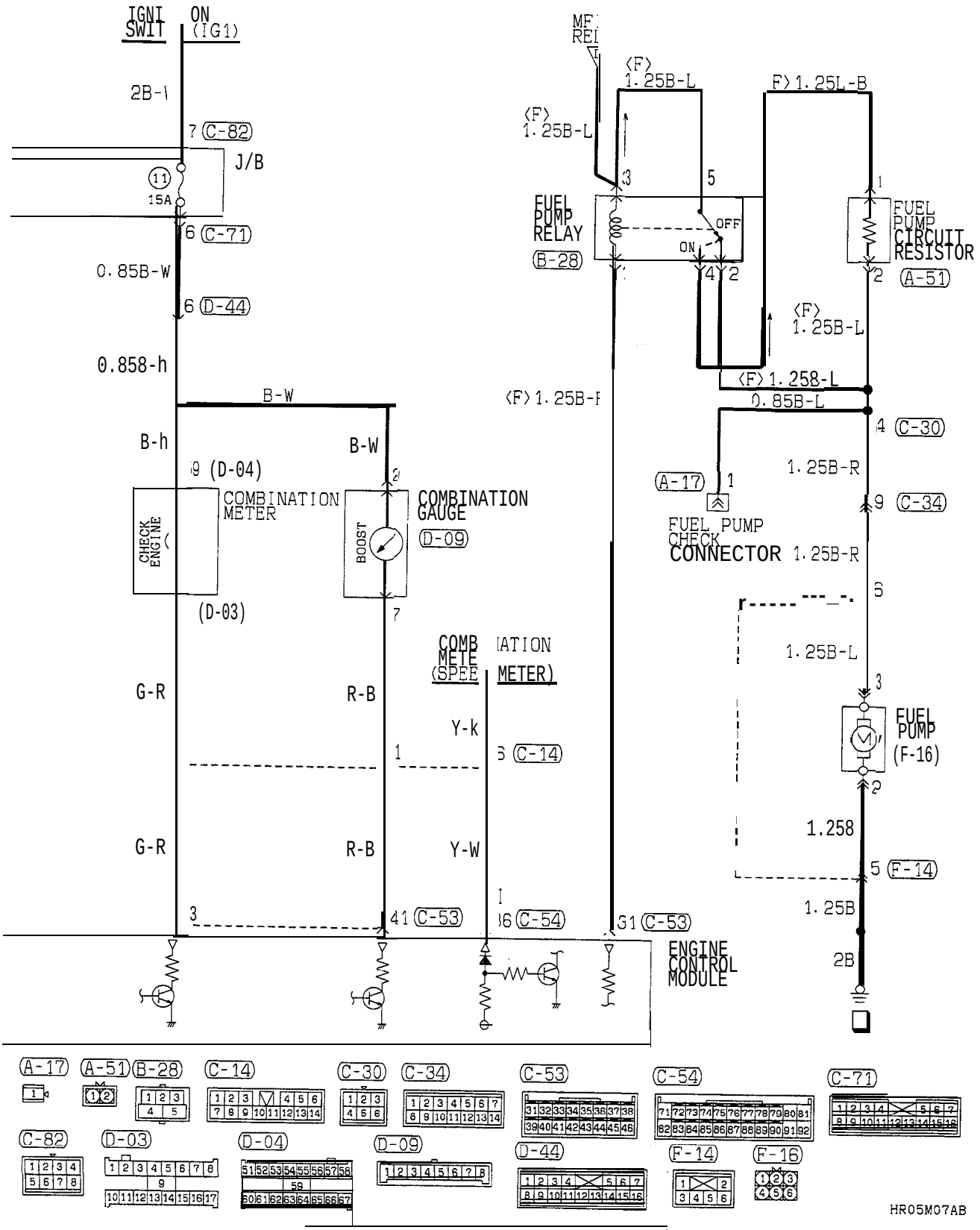

TSB Revision

MFI CIRCUIT (1994 MODELS) <TURBO> (CONTINUED)

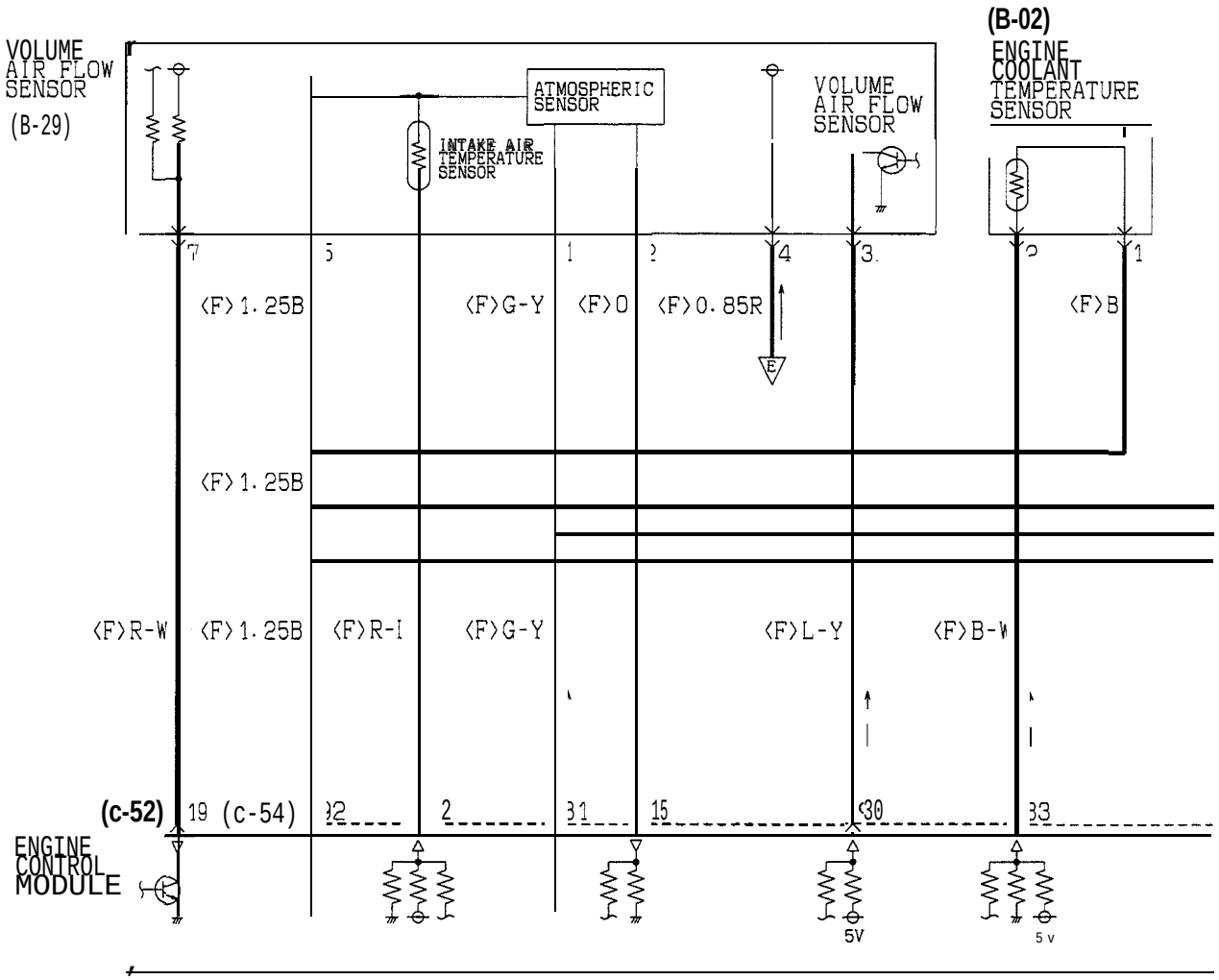

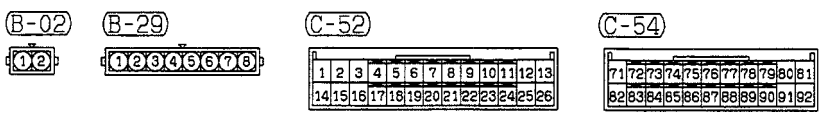

HR05M07BA

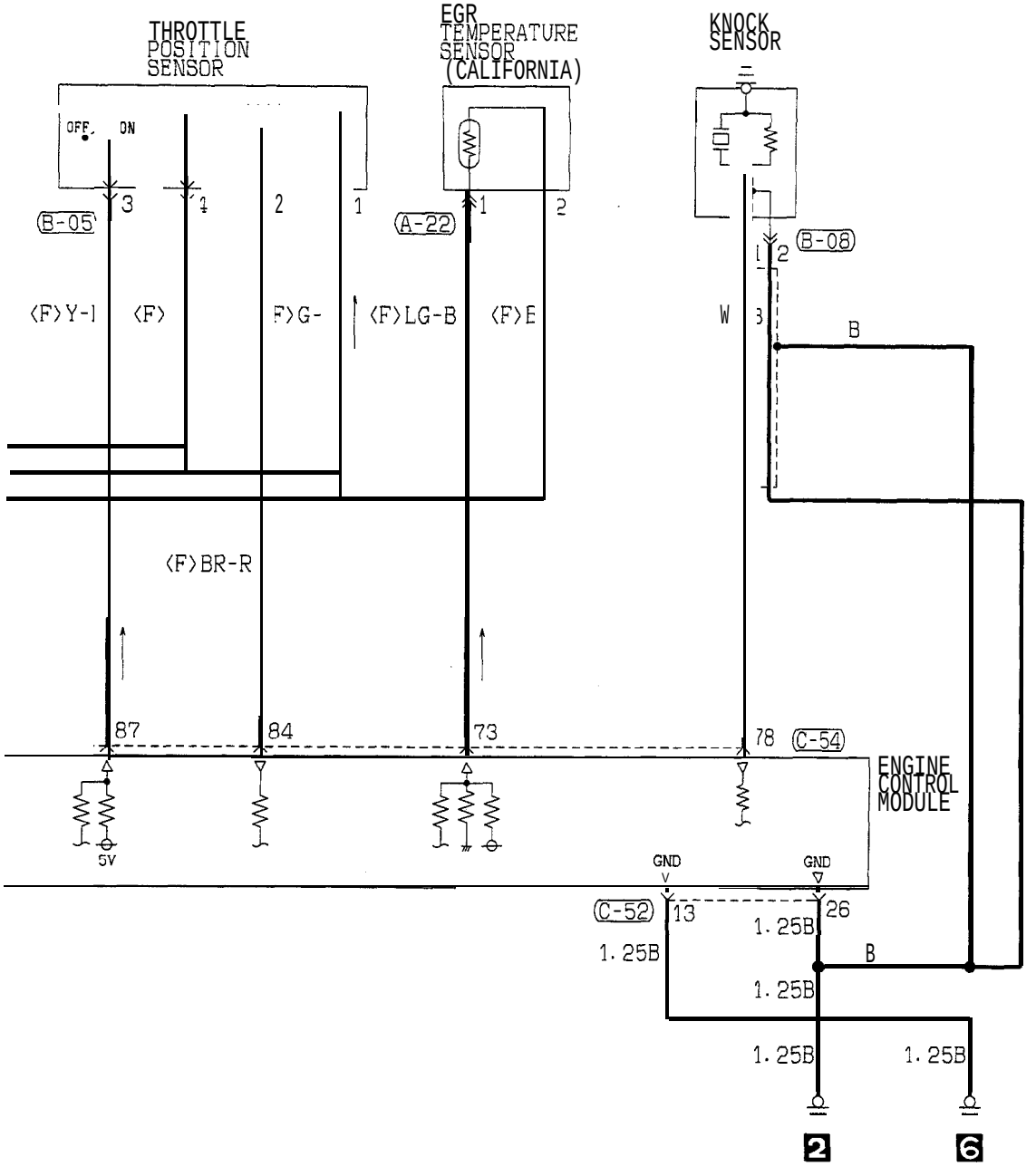

(A-22) (B-05) (B-08) (c-52) (C-54)

HR05M07BB

TSB Revision

MFI CIRCUIT (1994 MODELS) <TURBO> (CONTINUED)

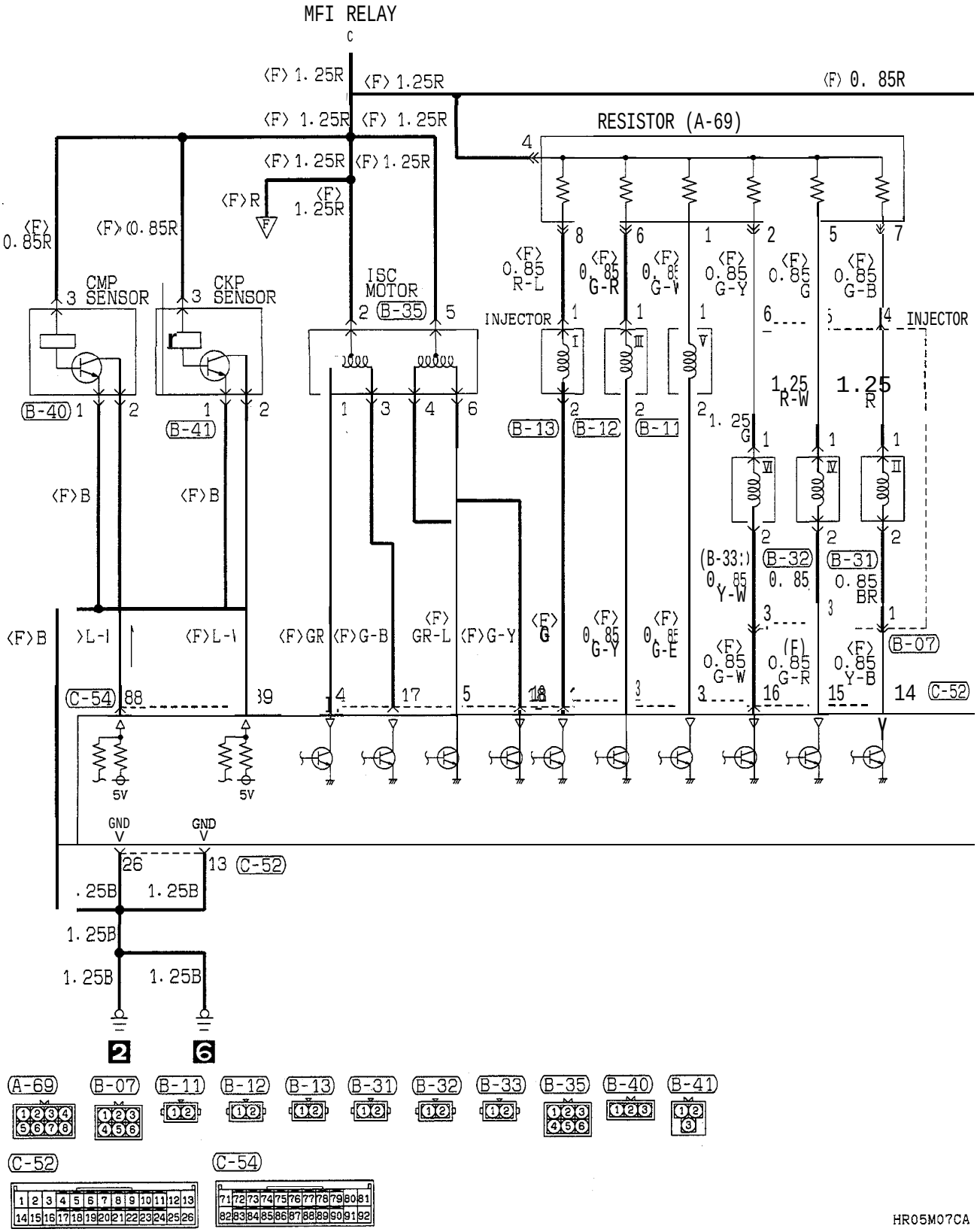

TSB Revision

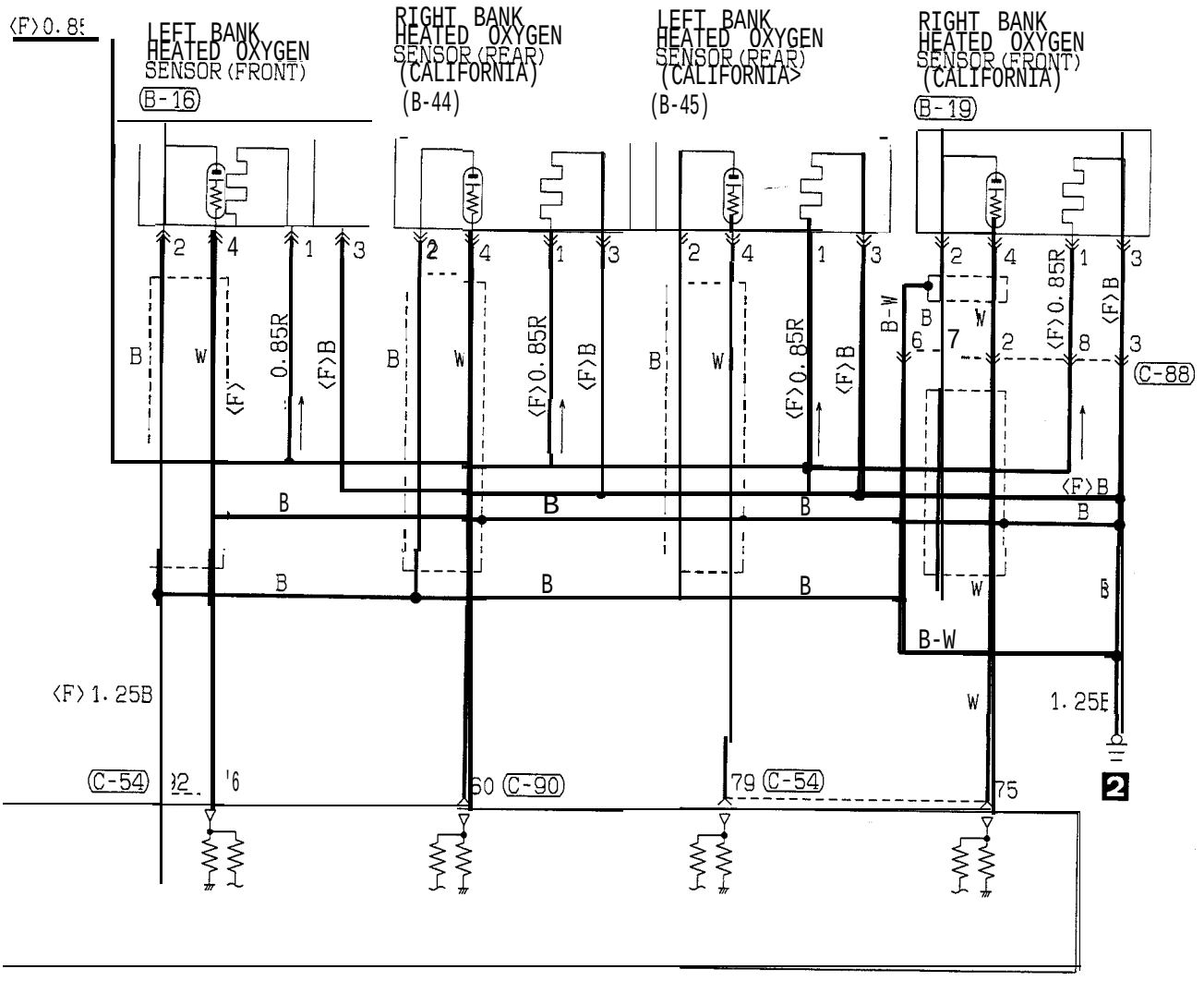
LEFT BANK HEATED OXYGEN SENSOR (FRONT)
B-16
RIGHT BANK HEATED OXYGEN SENSOR (REAR) (CALIFORNIA)
B-44
LEFT BANK HEATED OXYGEN SENSOR (REAR) (CALIFORNIA)
B-45
RIGHT BANK HEATED OXYGEN SENSOR (FRONT) (CALIFORNIA)
B-19
C-88
C-54
C-90
<F>1.25B
1.25B
B-W

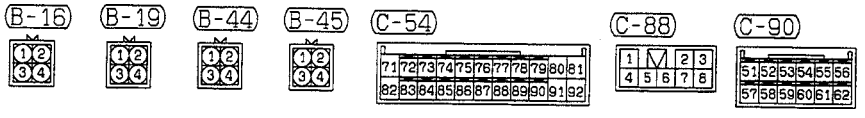
B-16
B-19
B-44
B-45
C-54
C-88
C-90

HR05M07CB

MFI CIRCUIT (1994 MODELS) <TURBO> (CONTINUED)

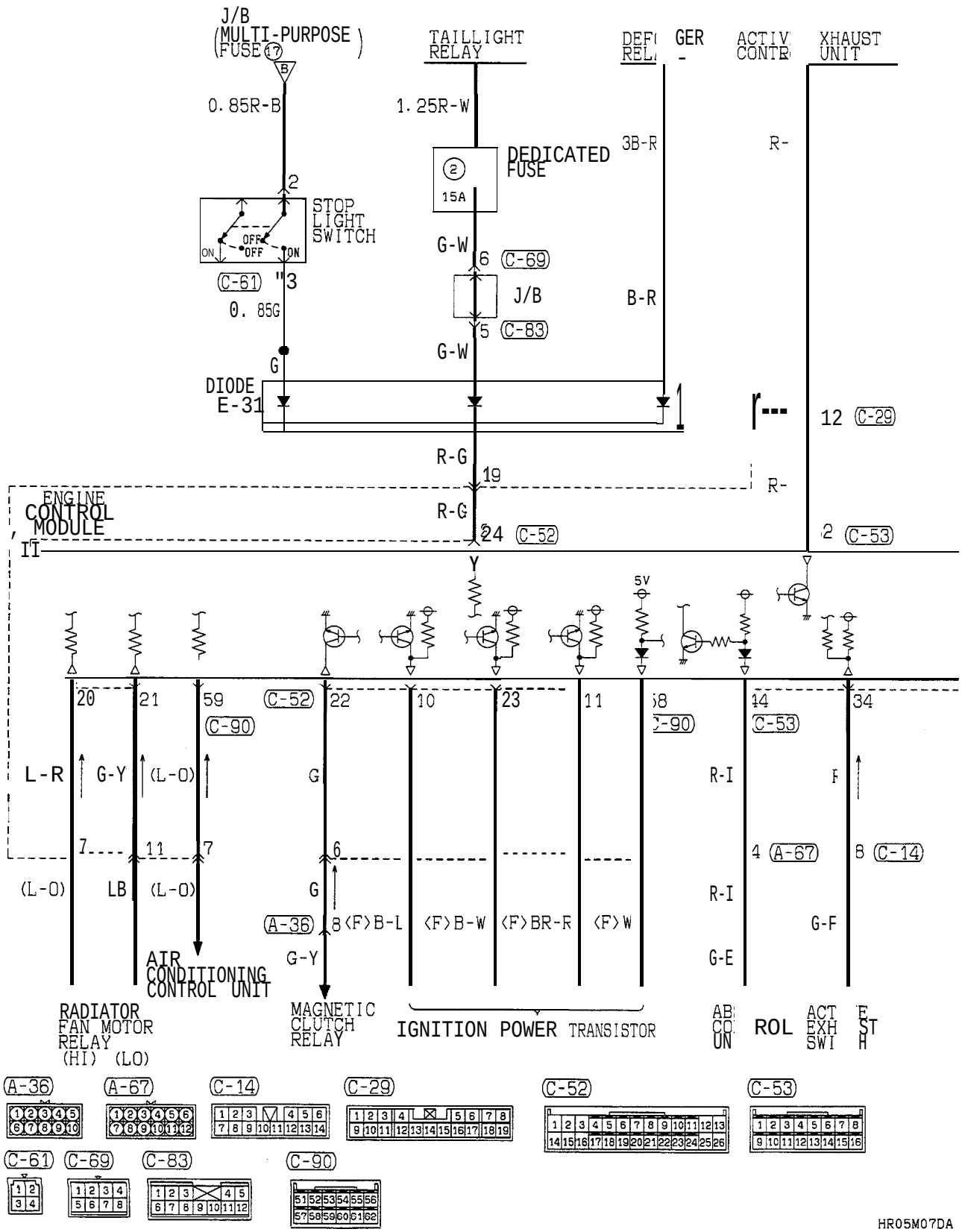

TSB Revision

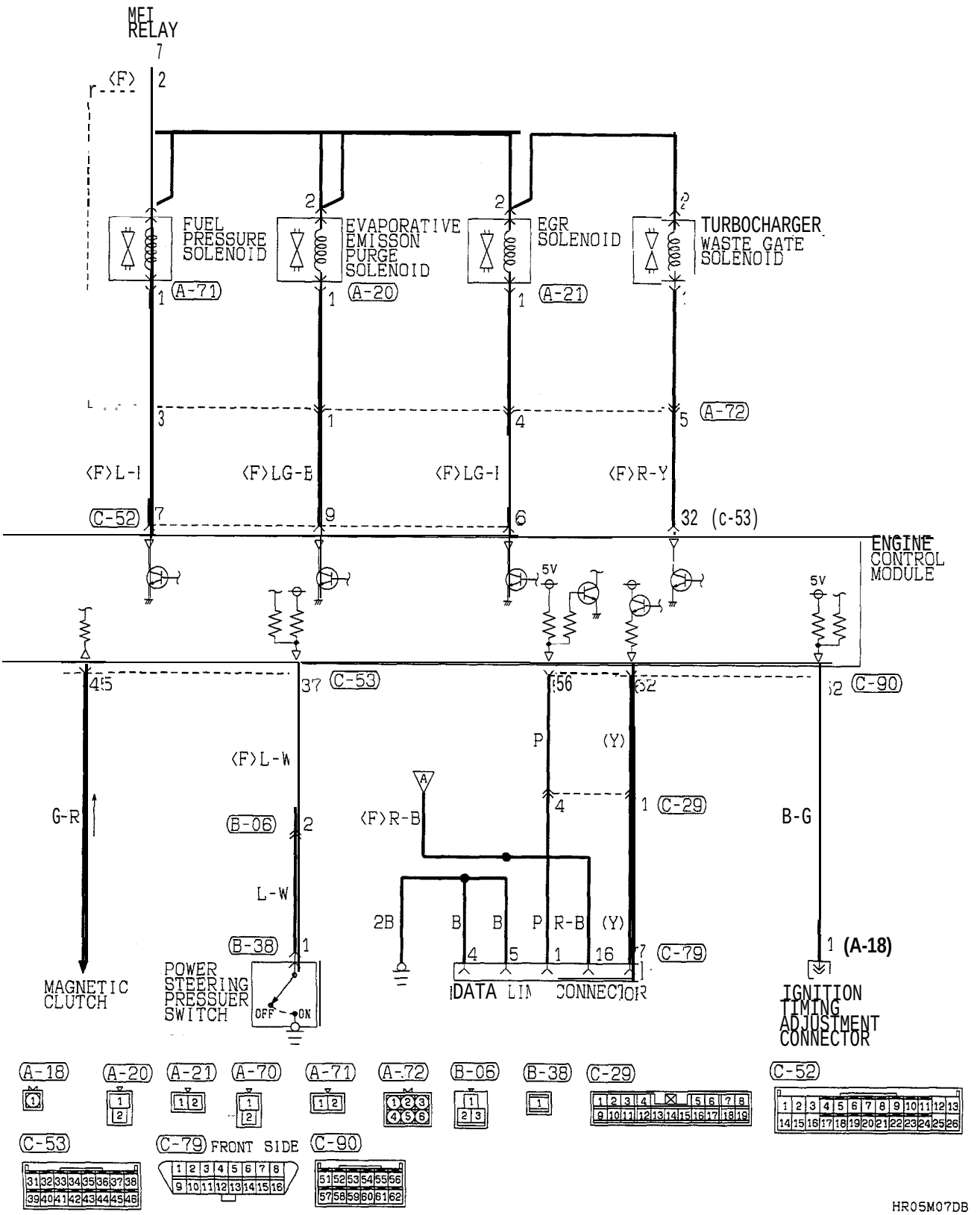

TSB Revision

MFI CIRCUIT (1995 MODELS)

<NON TURBO> (FEDERAL)

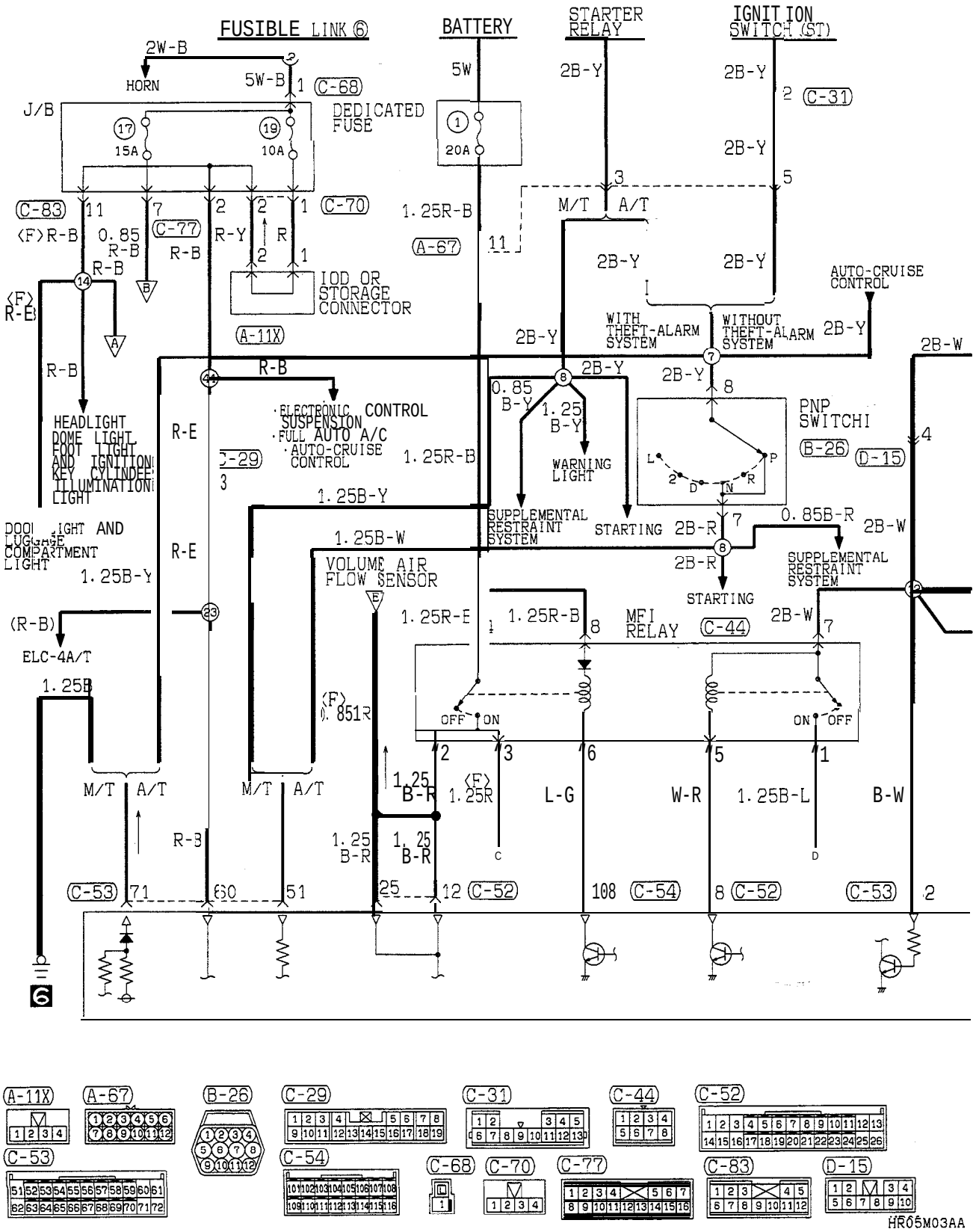

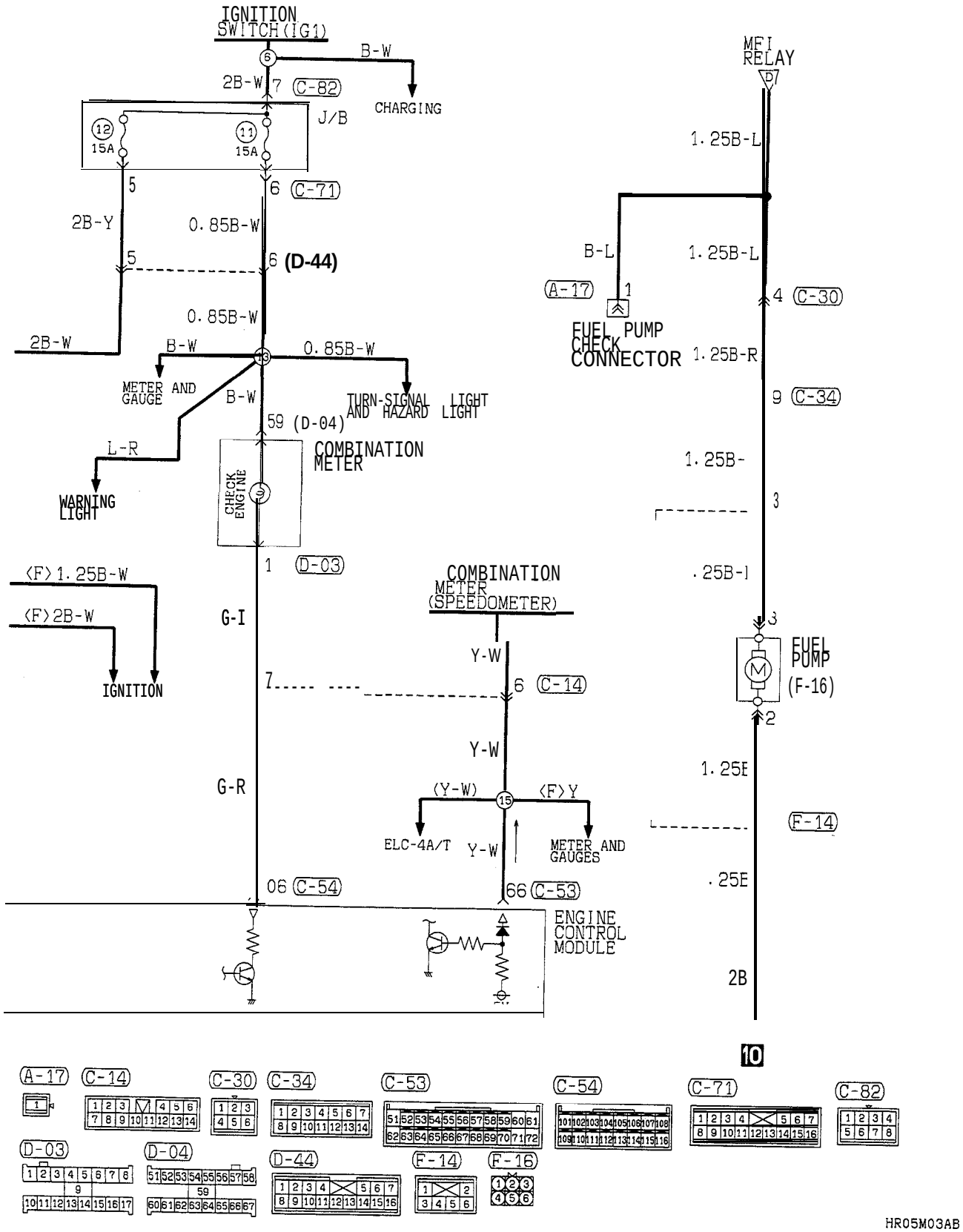

TSB Revision

MFI CIRCUIT (1995 MODELS) <NON TURBO> (FEDERAL) (CONTINUED)

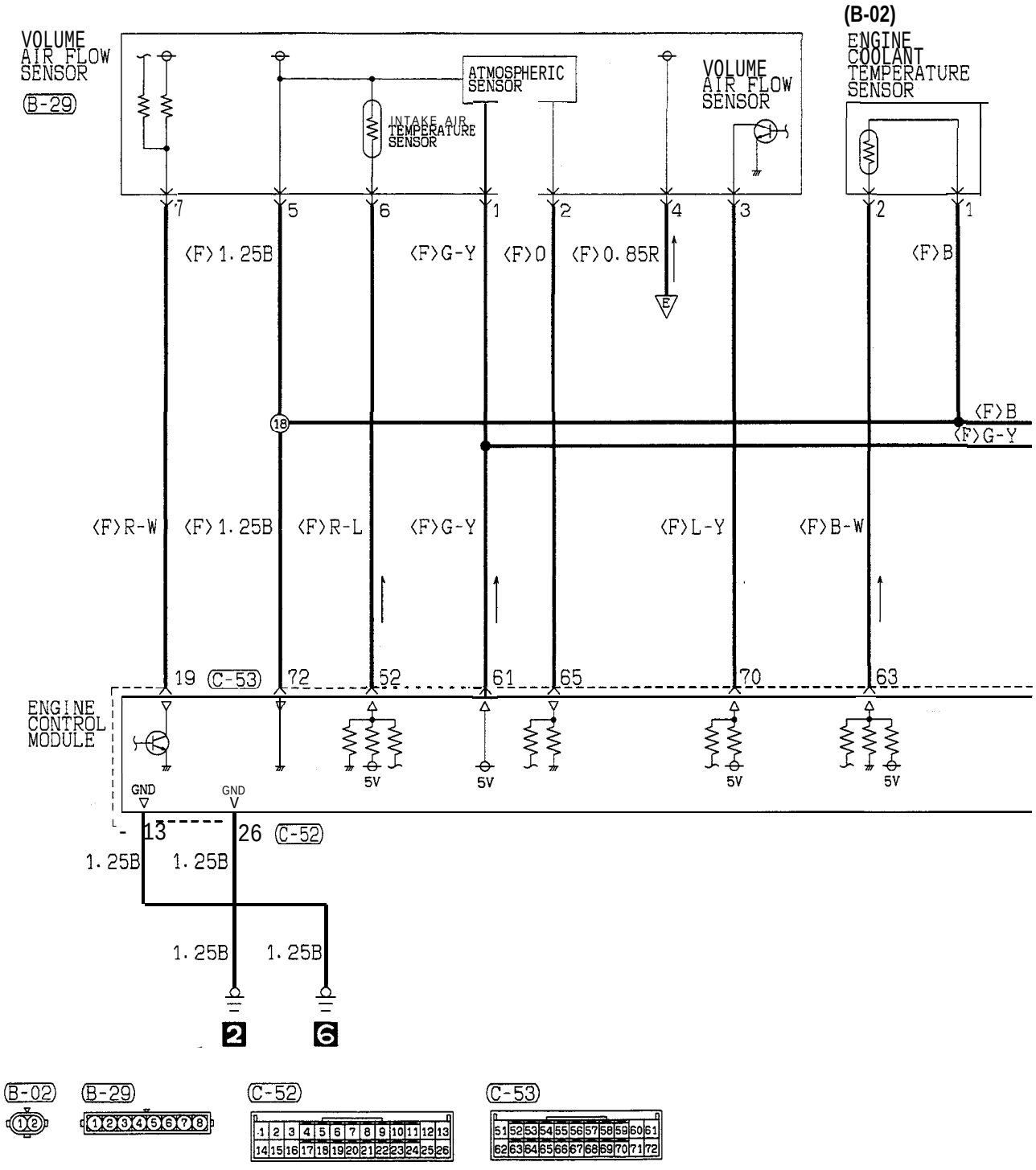

HR05M03BA

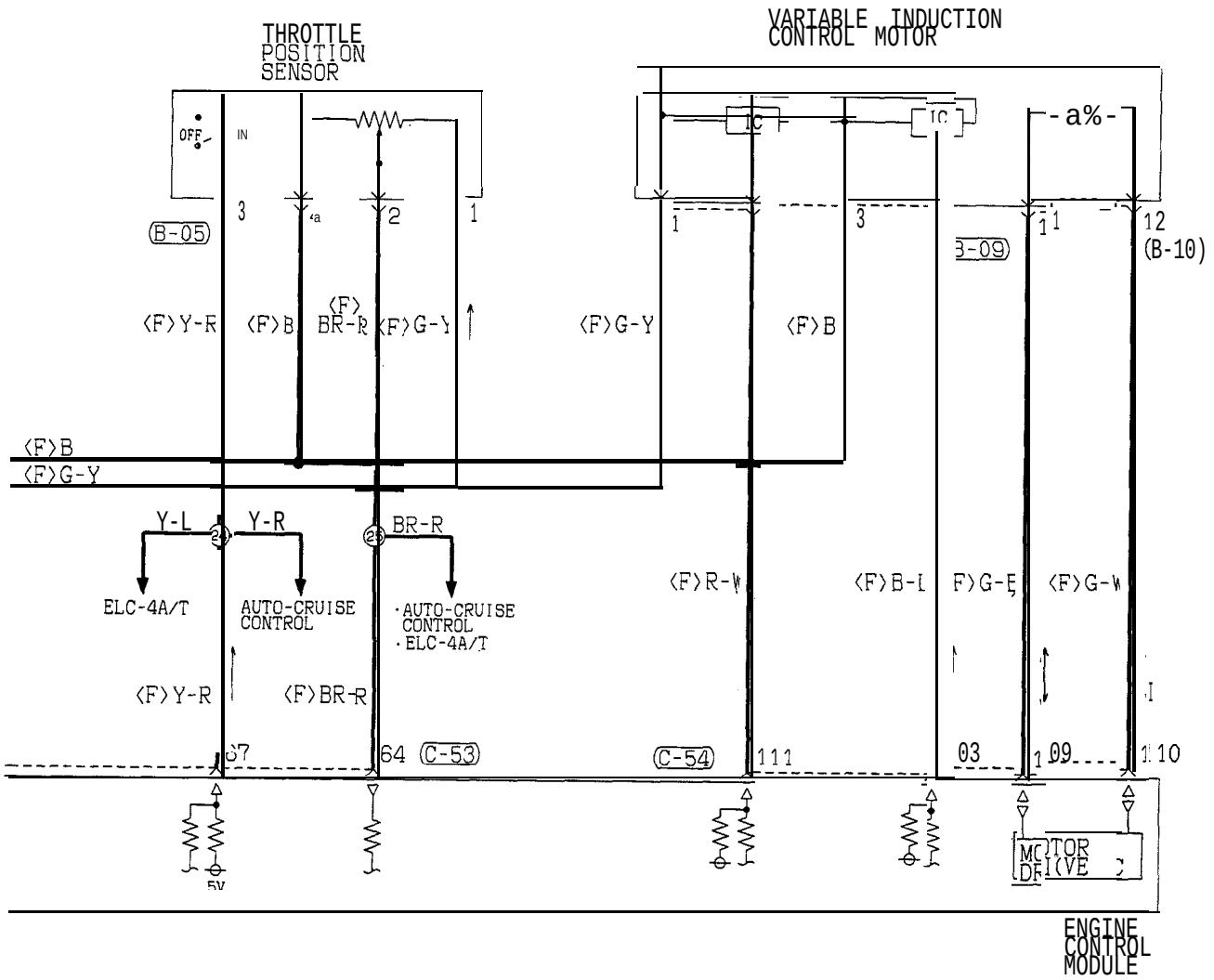
THROTTLE POSITION SENSOR
VARIABLE INDUCTION CONTROL MOTOR
OFF
IN
B-05
B-09
B-10
(B-10)
(F)Y-R
(F)B
(F)BR-R
(F)G-Y
(F)G-Y
(F)B
(F)B
(F)G-Y
Y-L
Y-R
BR-R
ELC-4A/T
AUTO-CRUISE CONTROL
·AUTO-CRUISE CONTROL
·ELC-4A/T
(F)R-W
(F)B-L
(F)G-B
(F)G-W
(F)Y-R
(F)BR-R
C-53
C-54
5V
ENGINE CONTROL MODULE

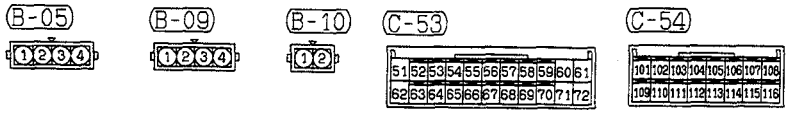
B-05
B-09
B-10
C-53
C-54

HR05M03BB

MFI CIRCUIT (1995 MODELS) <NON TURBO> (FEDERAL) (CONTINUED)

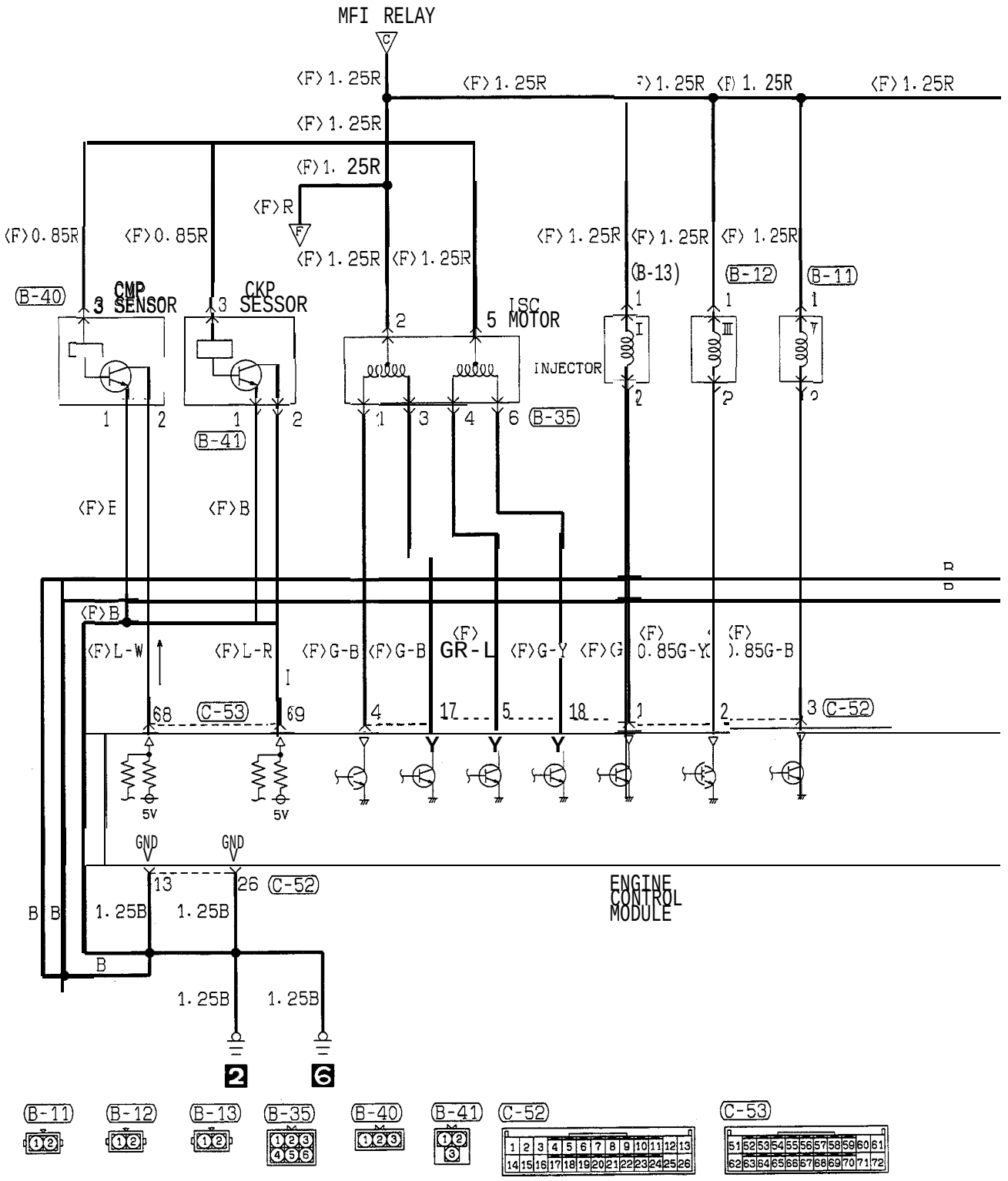

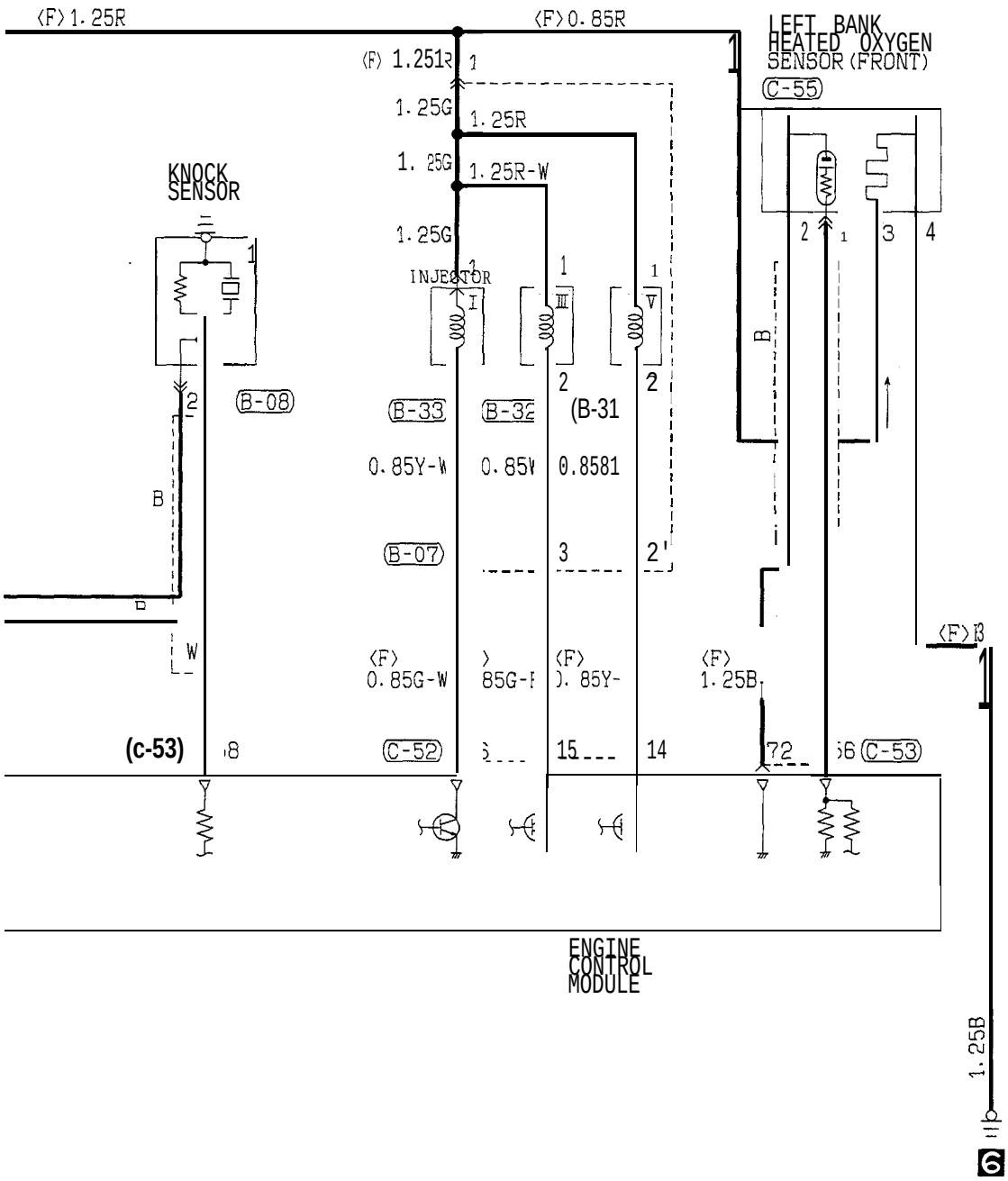
(F) 1.25R
(F) 0.85R
LEFT BANK HEATED OXYGEN SENSOR (FRONT)
C-55
(F) 1.25R
1.25G
1.25R
1.25G
1.25R-W
1.25G
KNOCK SENSOR
INJECTOR
B-08
B-33
B-32
(B-31
0.85Y-W
0.85W
0.8581
B-07
(F) 0.85G-W
(F) 1.25B
(c-53)
C-52
C-53
ENGINE CONTROL MODULE
1.25B

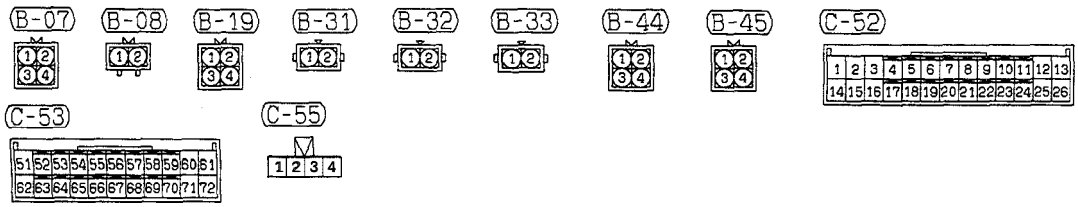
B-07
B-08
B-19
B-31
B-32
B-33
B-44
B-45
C-52
C-53
C-55

HR05M03CB

MFI CIRCUIT (1995 MODELS) <NON TURBO> (FEDERAL) (CONTINUED)

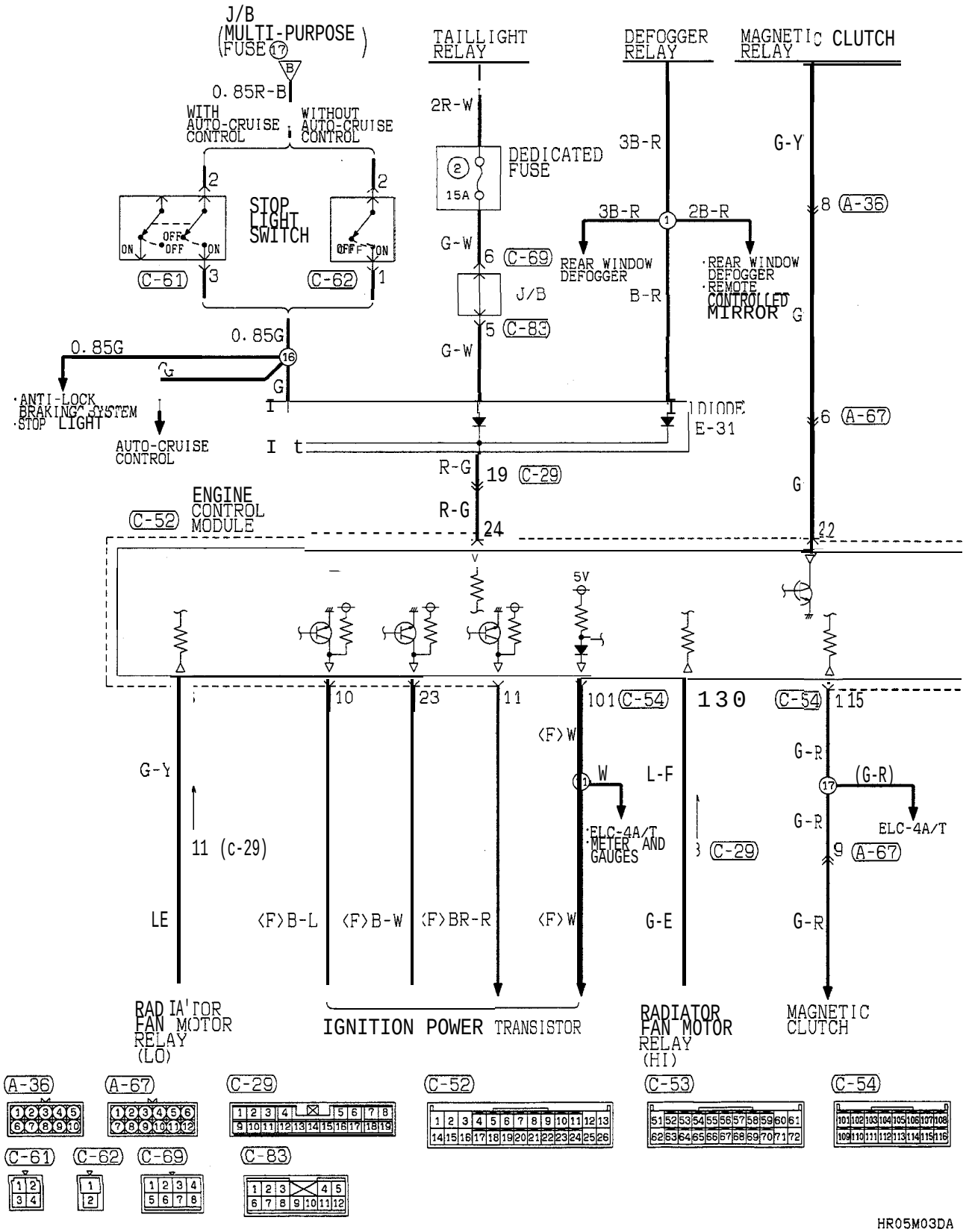

TSB Revision

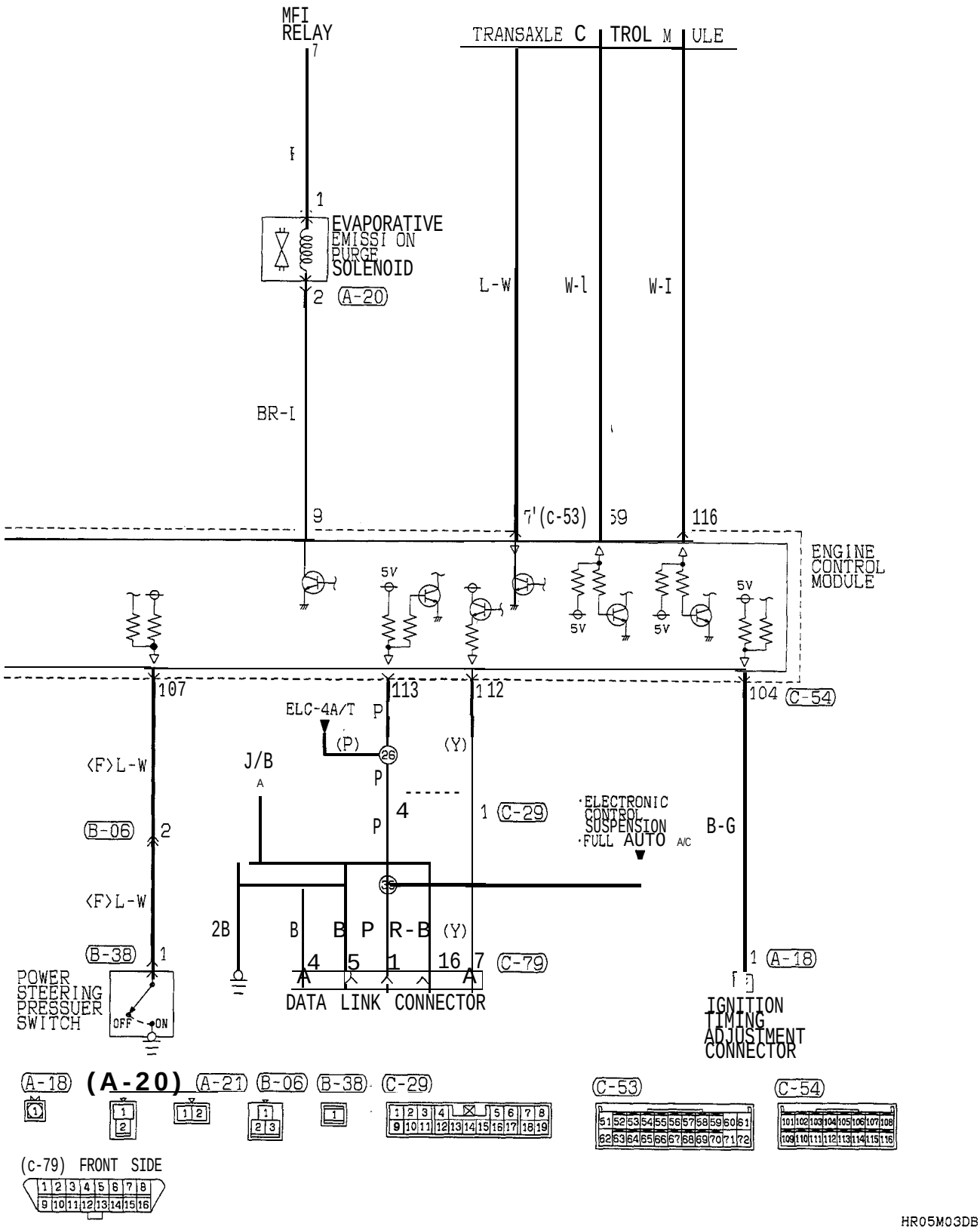

TSB Revision

MFI CIRCUIT (1995 MODELS)

<NON TURBO> (CALIFORNIA)

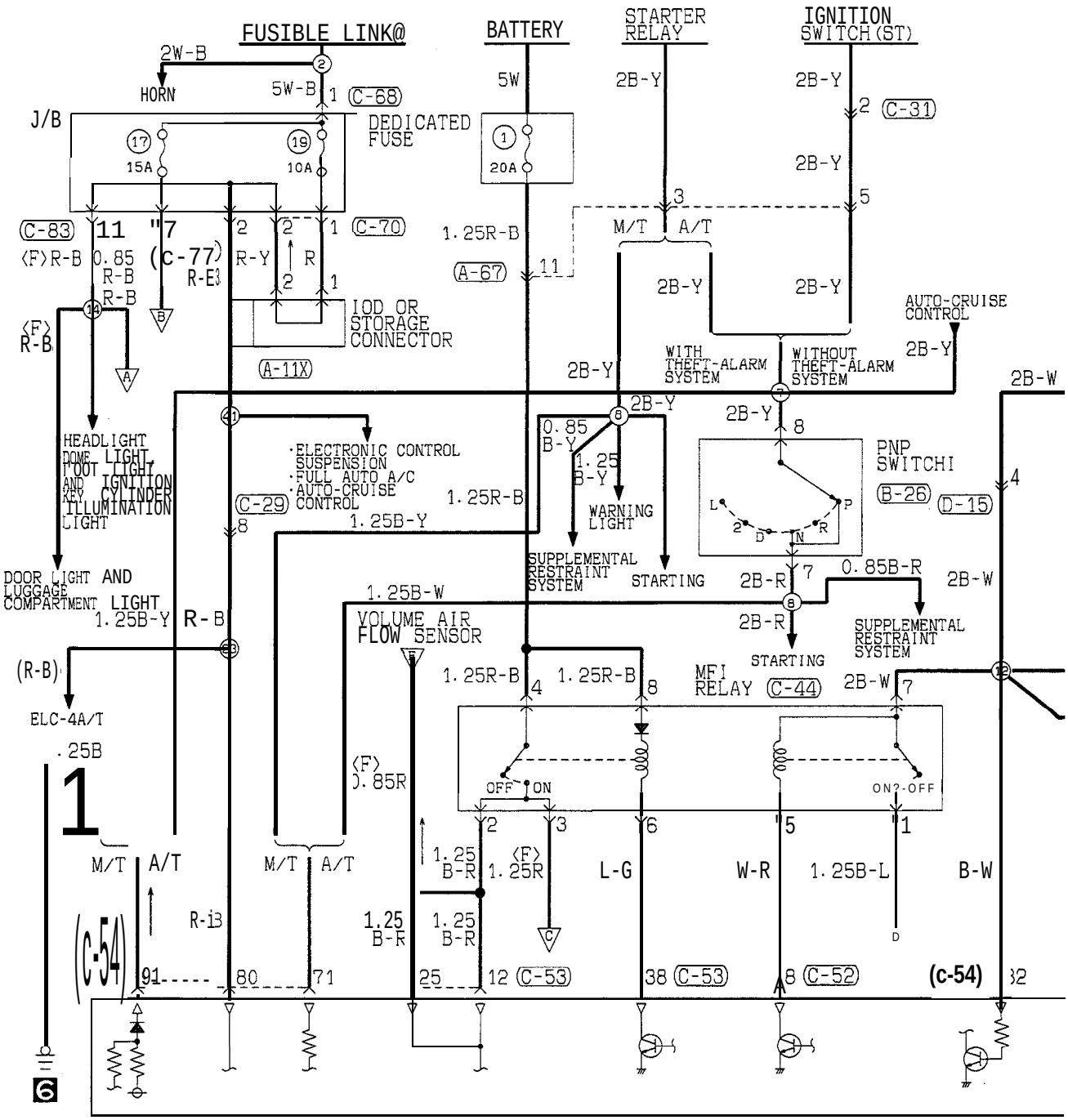

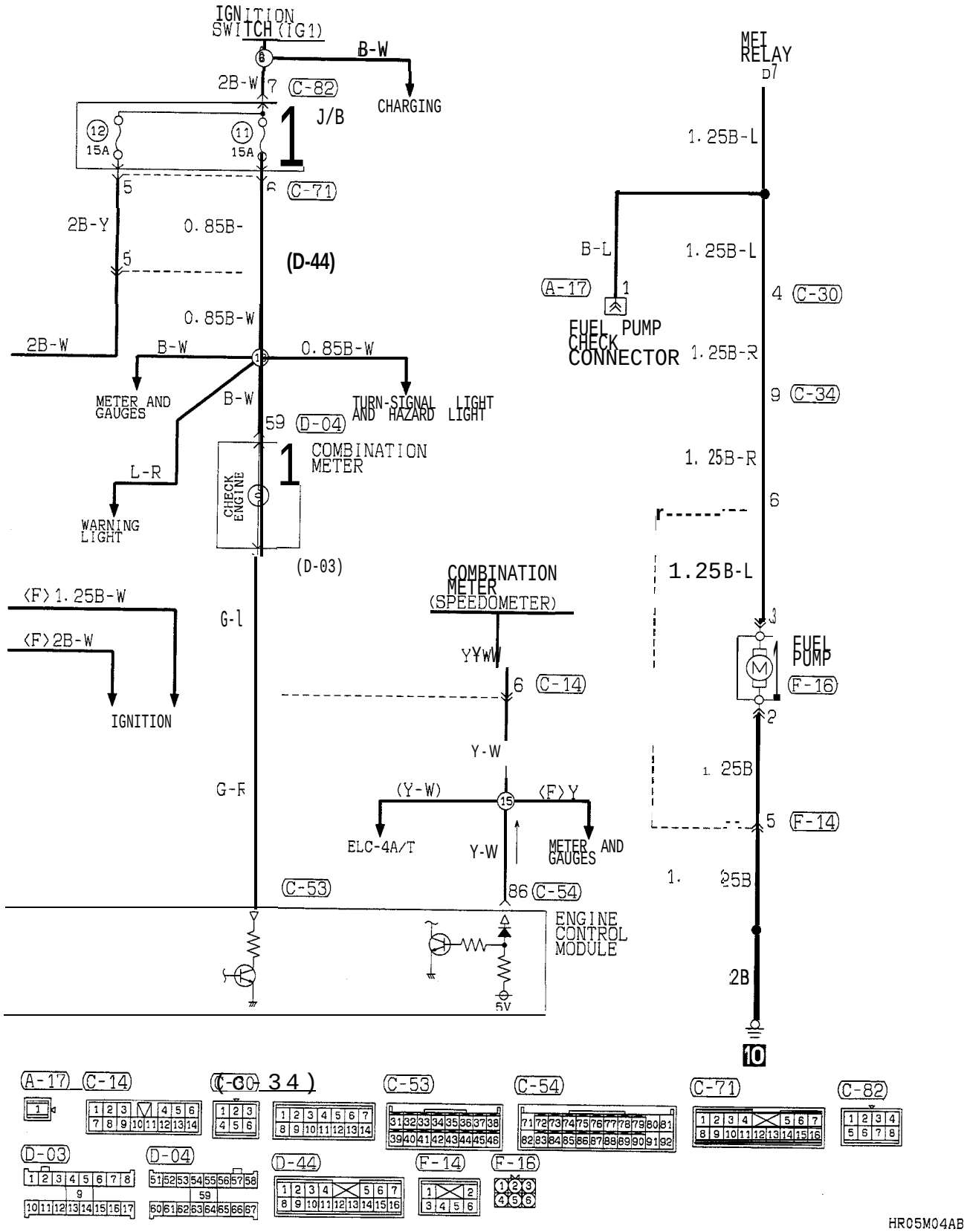
IGNITION SWITCH (IG1)
B-W
CHARGING
2B-W
(C-82)
J/B
15A
15A
(C-71)
2B-Y
0.85B-
(D-44)
0.85B-W
2B-W
B-W
0.85B-W
METER AND GAUGES
B-W
TURN-SIGNAL LIGHT AND HAZARD LIGHT
59 (D-04)
COMBINATION METER
L-R
CHECK ENGINE
WARNING LIGHT
(D-03)
(F) 1.25B-W
(F) 2B-W
IGNITION
G-l
COMBINATION METER (SPEEDOMETER)
YYW
6 (C-14)
Y-W
G-R
(Y-W)
(F) Y
ELC-4A/T
Y-W
METER AND GAUGES
(C-53)
86 (C-54)
ENGINE CONTROL MODULE
5V
MFI RELAY
D7
1.25B-L
B-L
1.25B-L
(A-17)
4 (C-30)
FUEL PUMP CHECK CONNECTOR
1.25B-R
9 (C-34)
1.25B-R
6
1.25B-L
FUEL PUMP
(F-16)
1.25B
5 (F-14)
1.25B
2B
10
(A-17) (C-14) (C-30) (C-34) (C-53) (C-54) (C-71) (C-82)
(D-03) (D-04) (D-44) (F-14) (F-16)
HR05M04AB

MFI CIRCUIT (1995 MODELS) <NON TURBO> (CALIFORNIA) (CONTINUED)

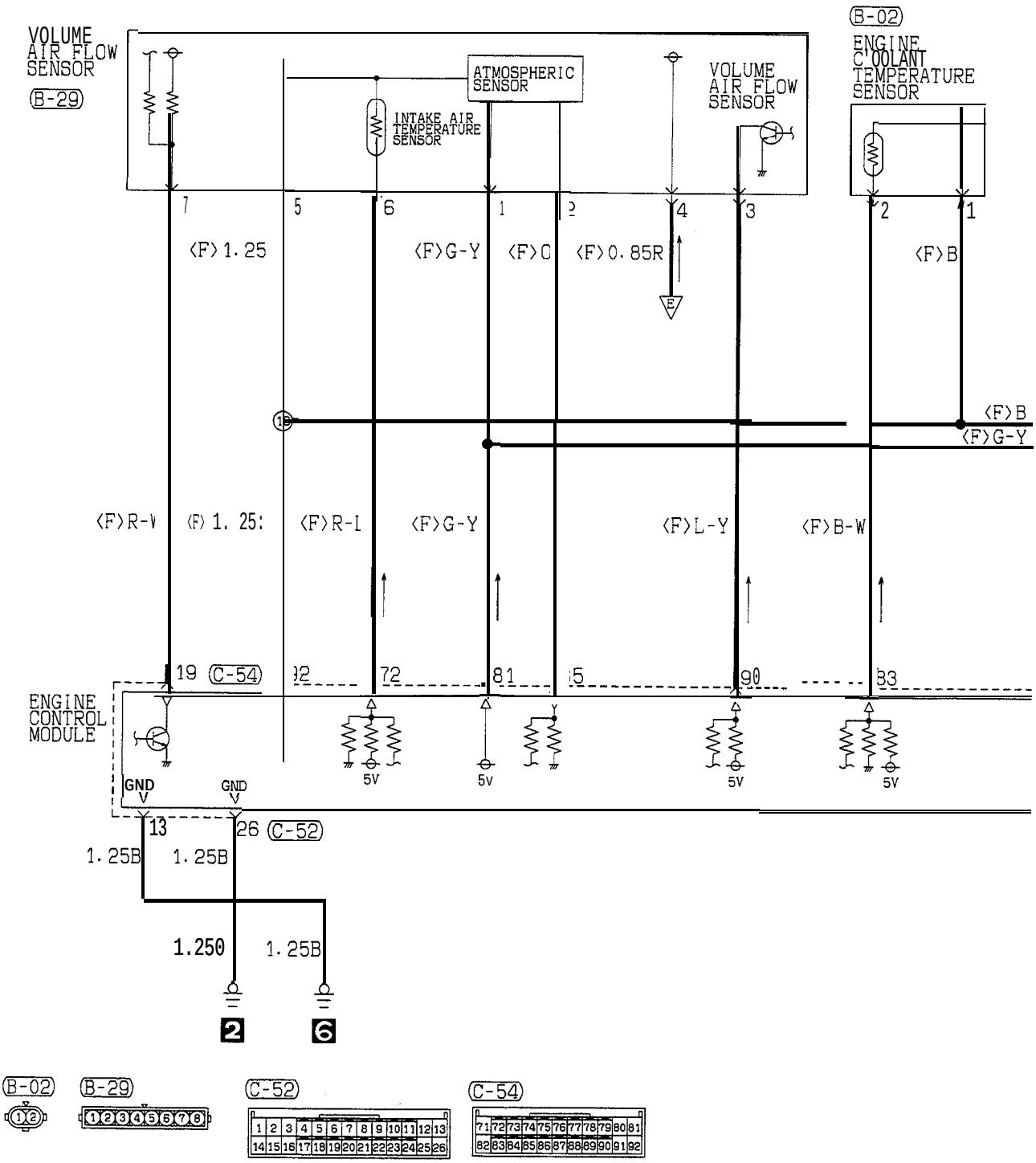

HR05M04BA

TSB Revision

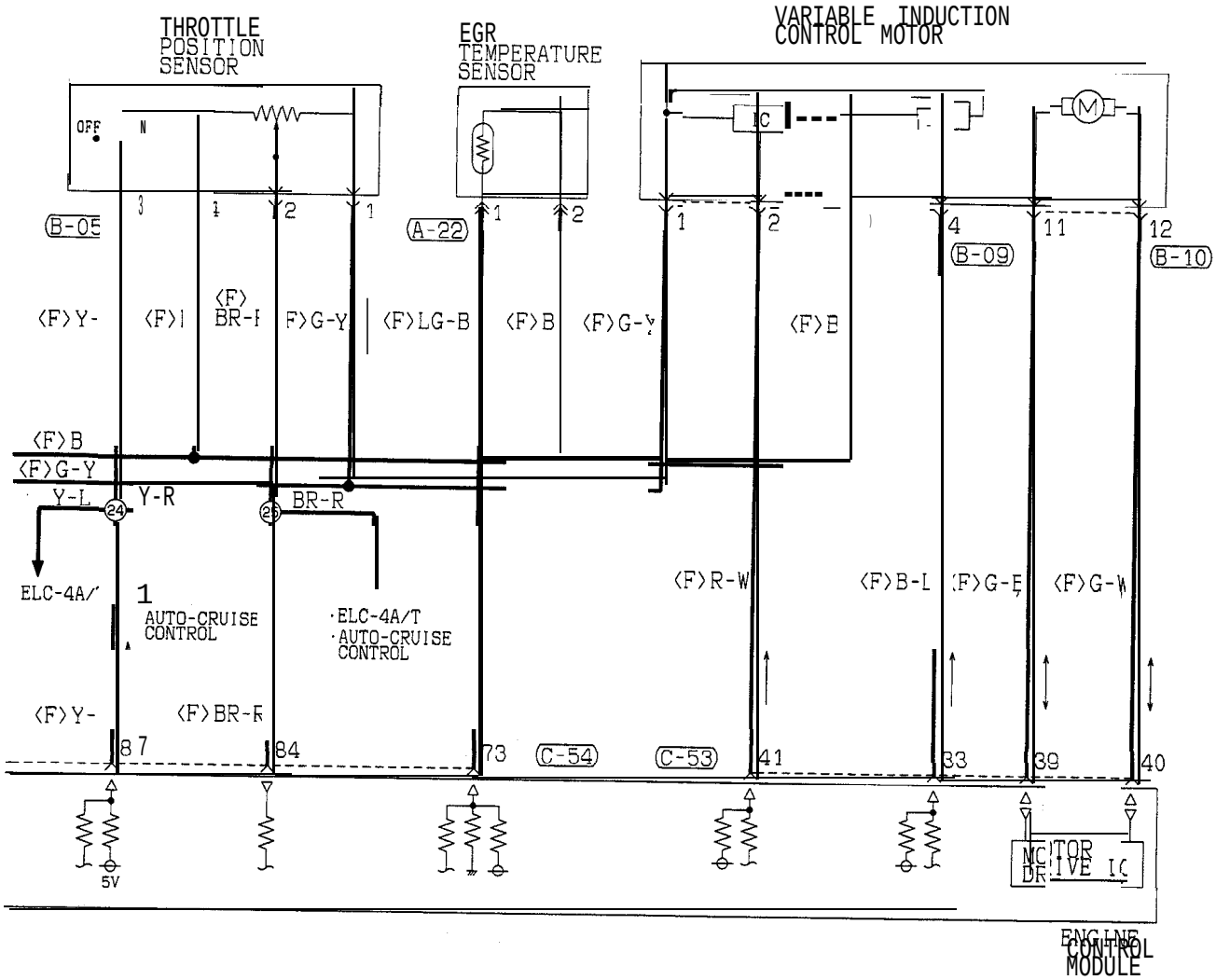

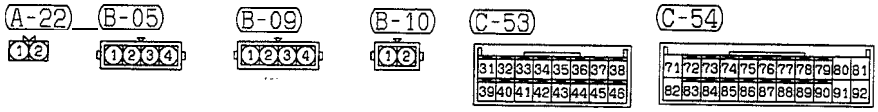

HR05M04BB

TSB Revision

MFI CIRCUIT (1995 MODELS) <NON TURBO> (CALIFORNIA) (CONTINUED)

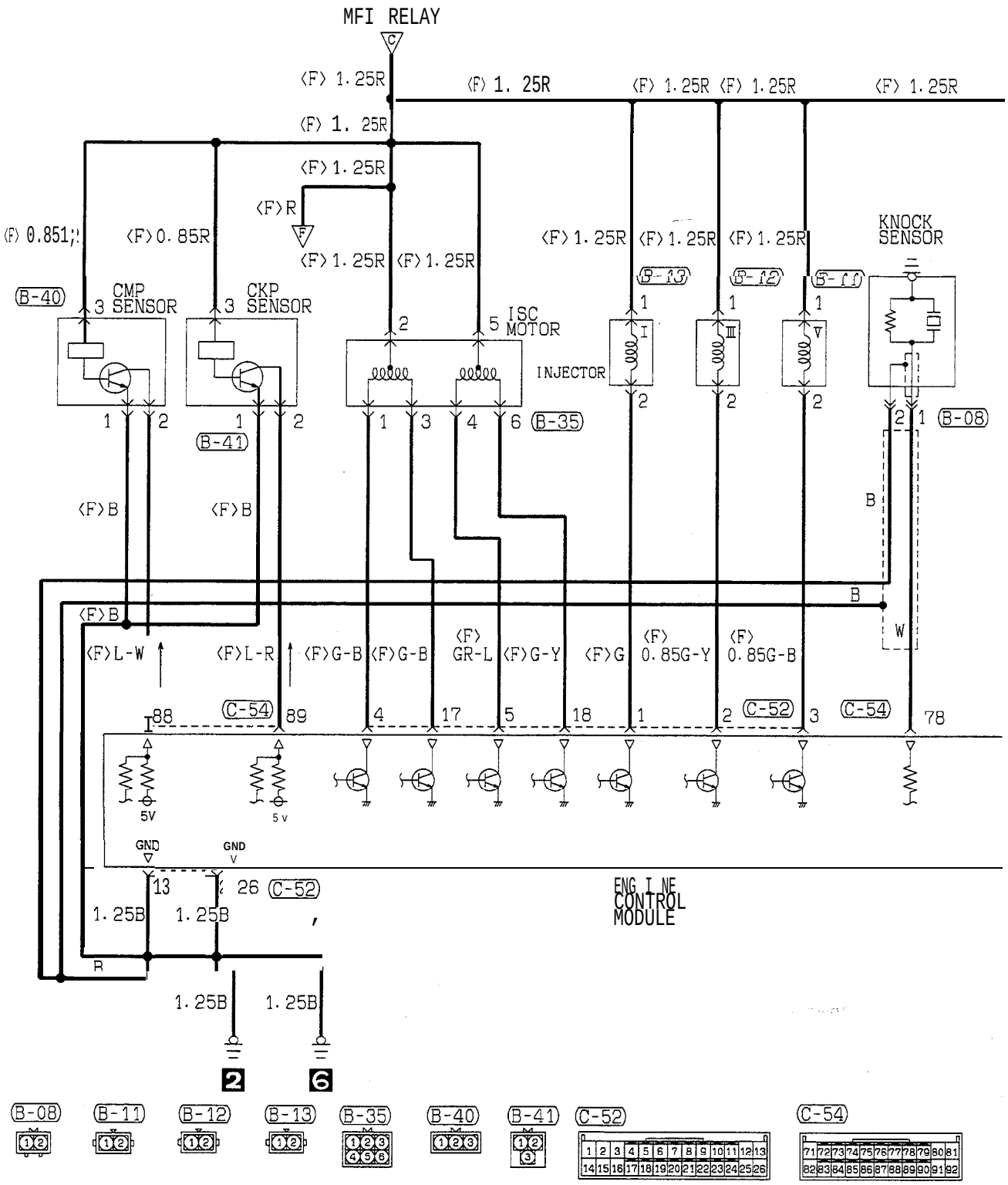

HR05M04CA

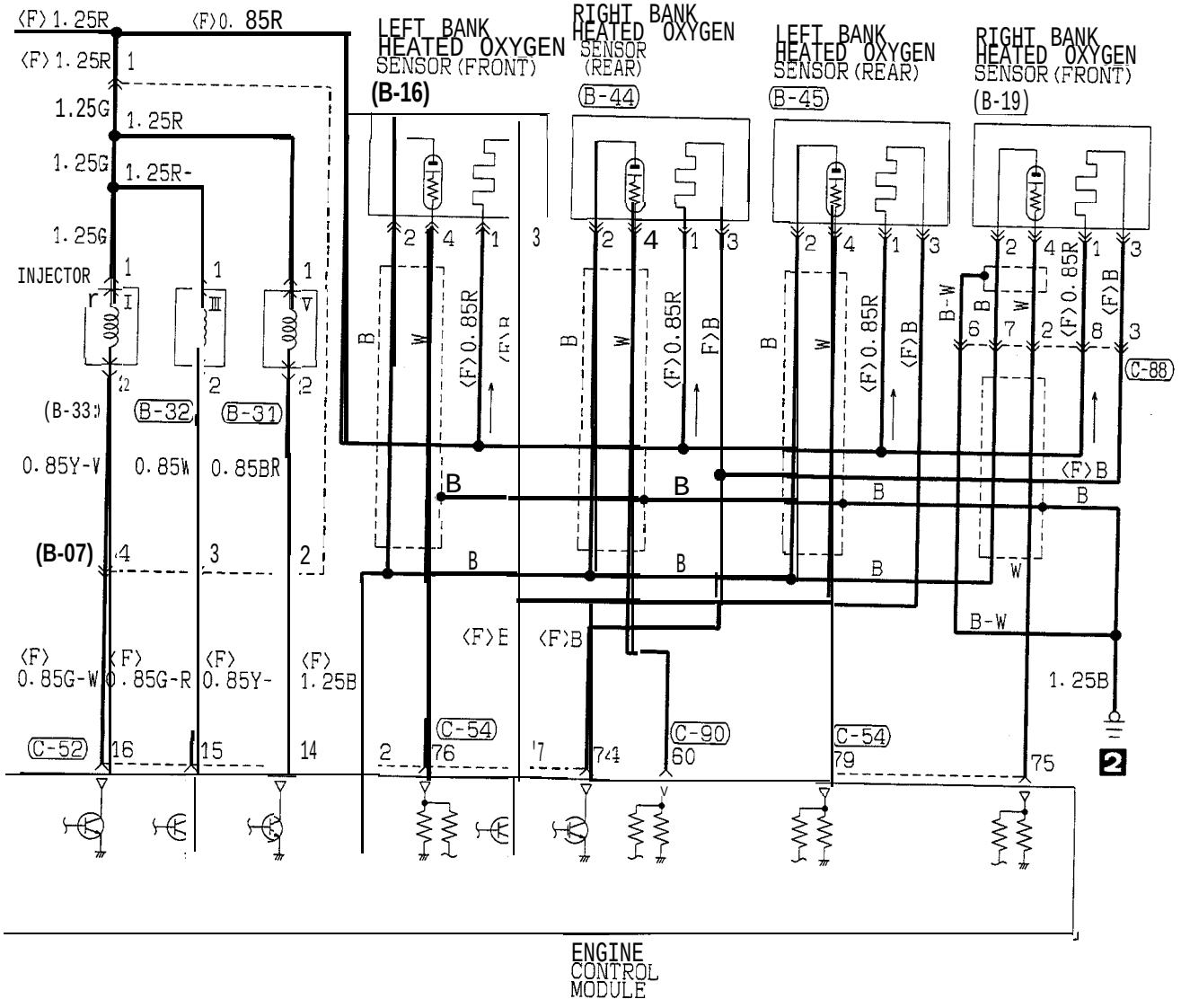

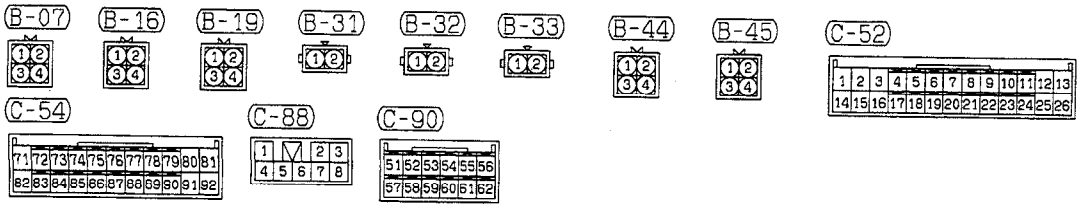

HR05M04CB

TSB Revision.

MFI CIRCUIT (1995 MODELS) <NON TURBO> (CALIFORNIA) (CONTINUED)

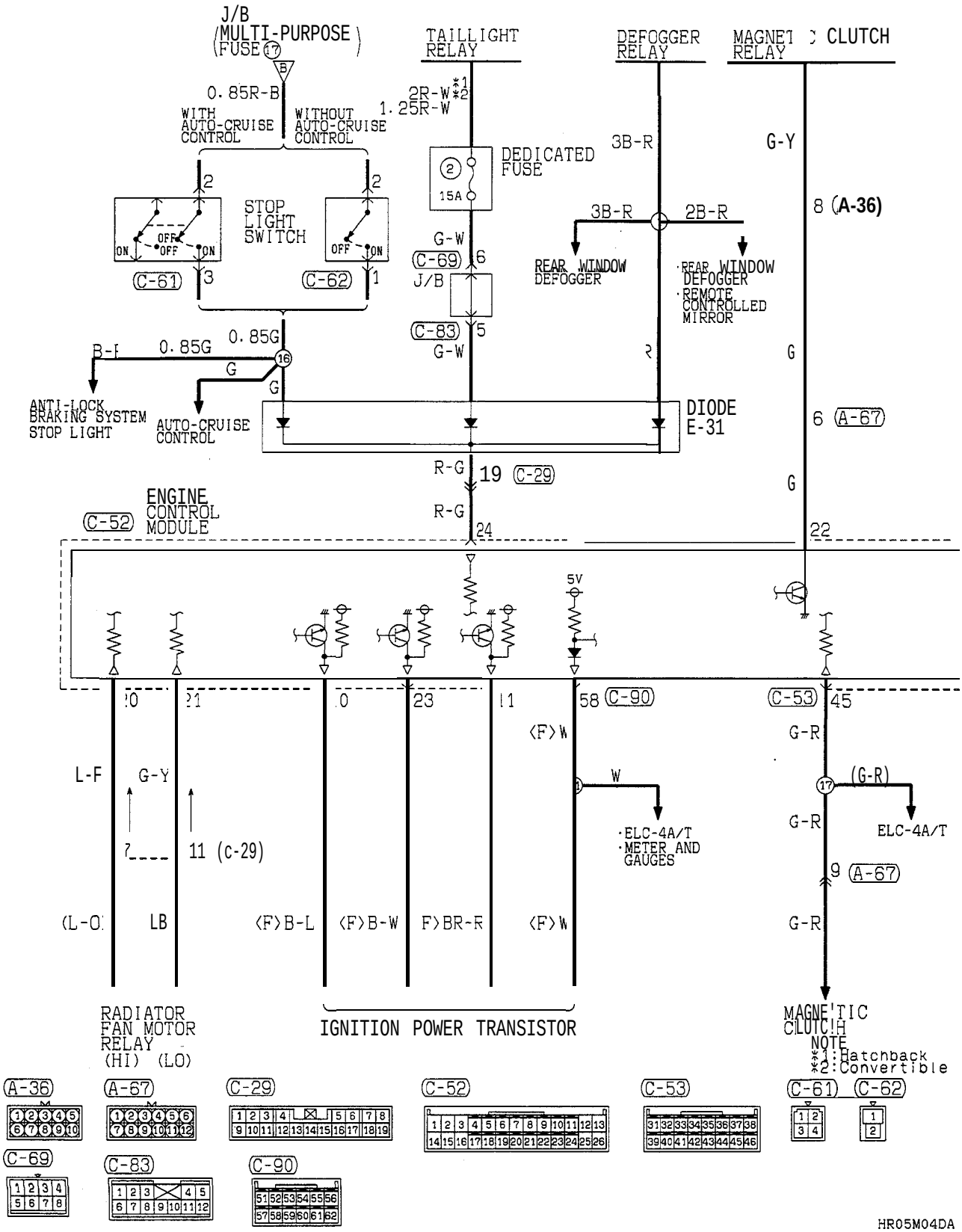

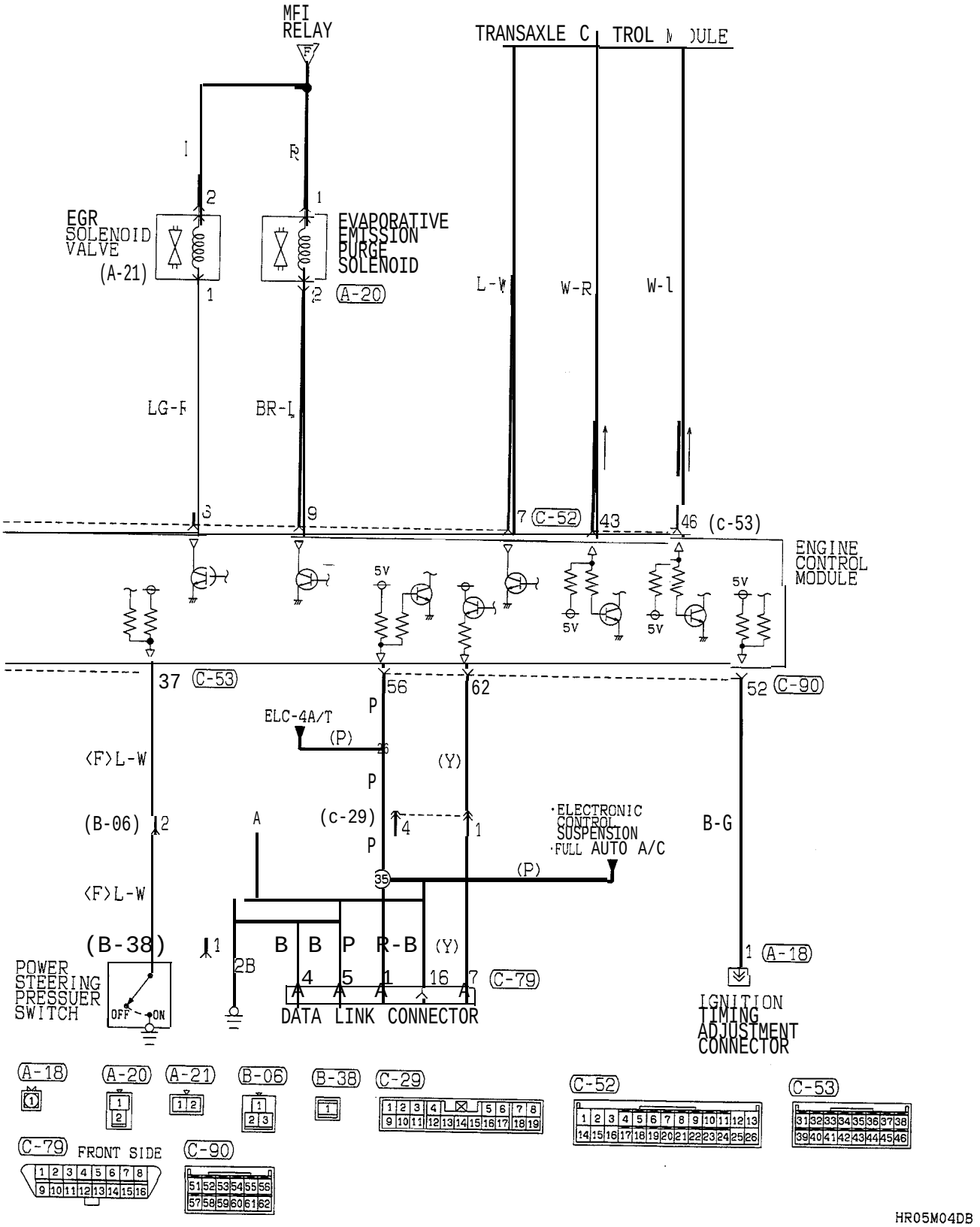

TSB Revision

MFI CIRCUIT (1995 MODELS)

<TURBO>

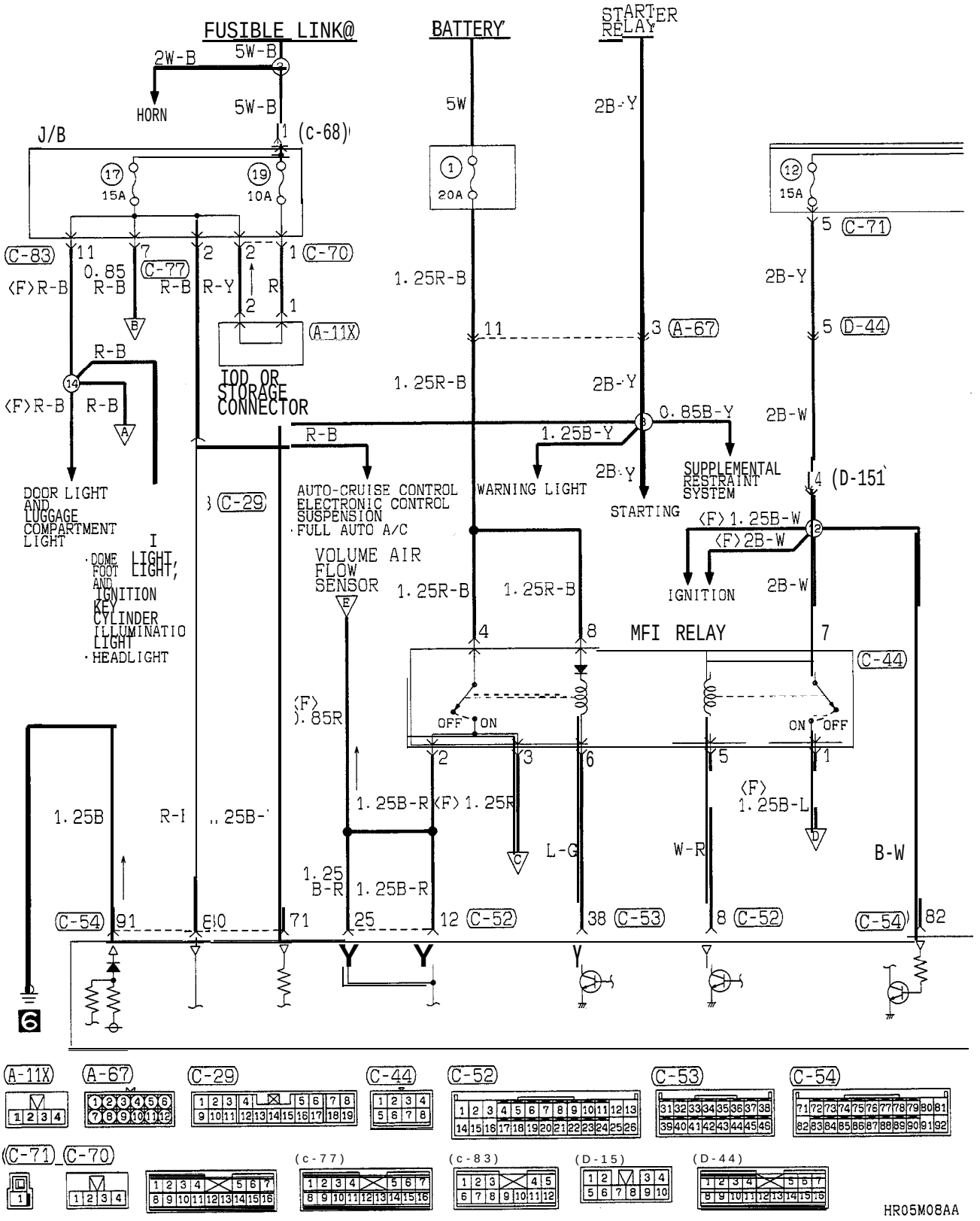

TSB Revision

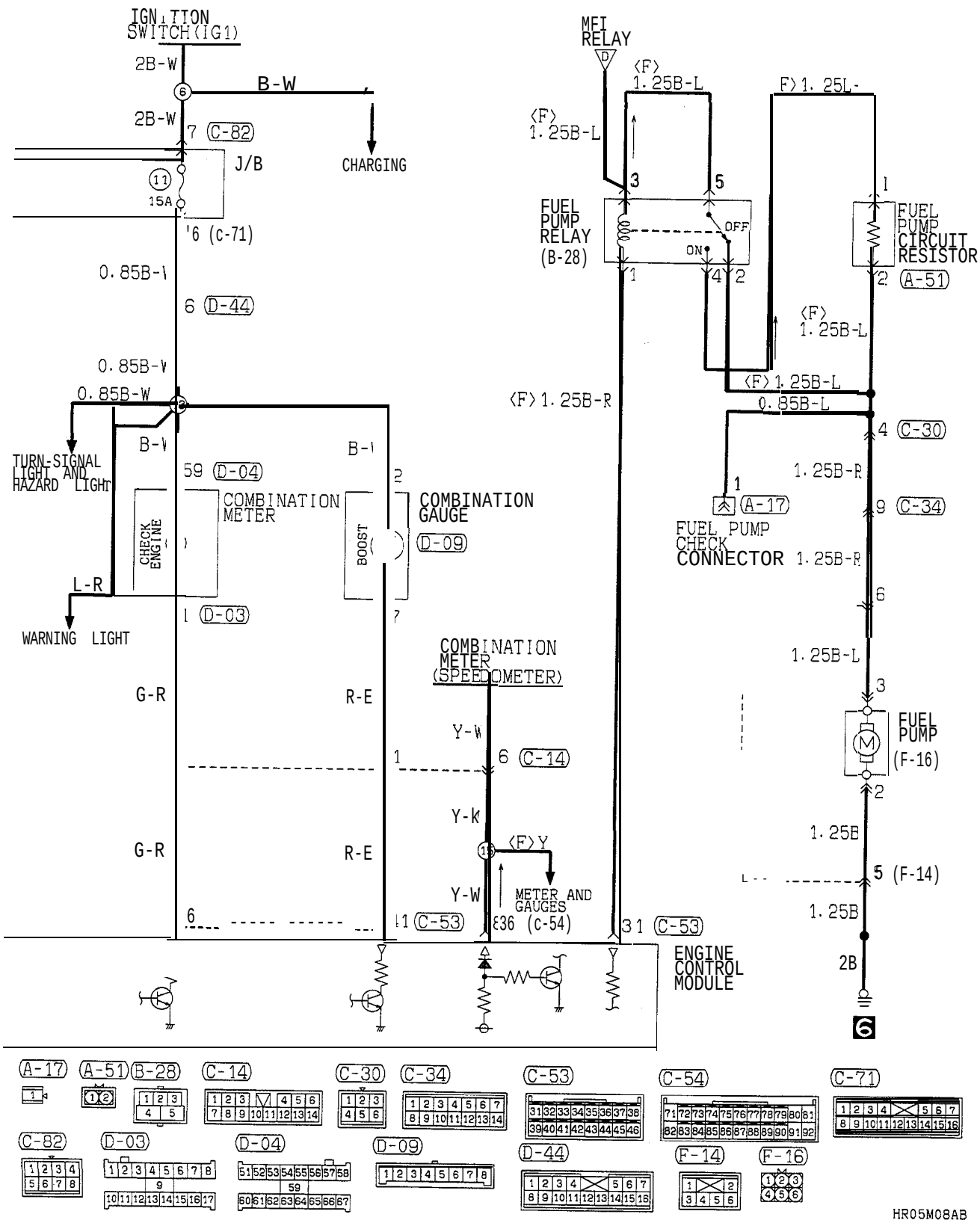

TSB Revision

MFI CIRCUIT (1995 MODELS) <TURBO> (CONTINUED)

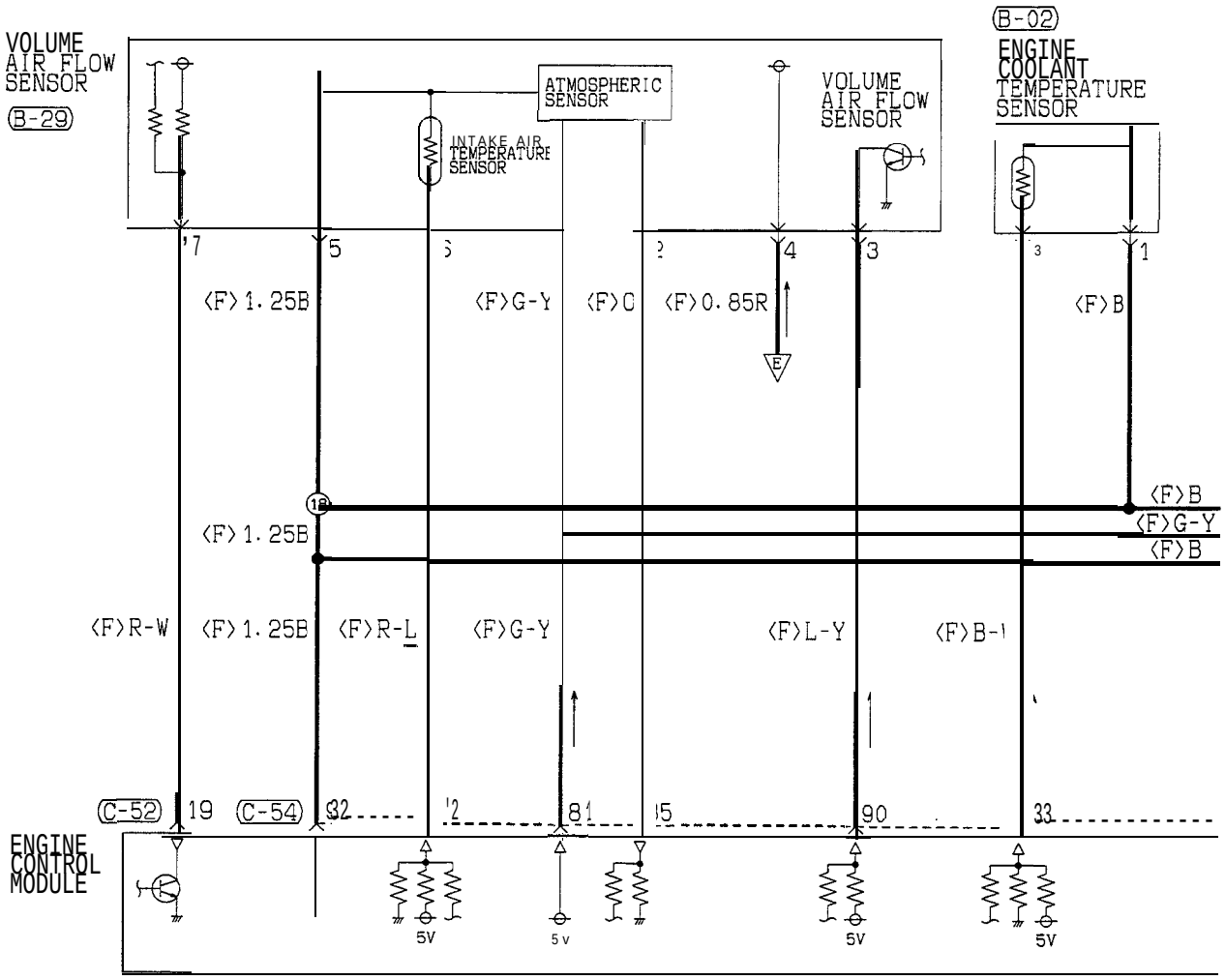

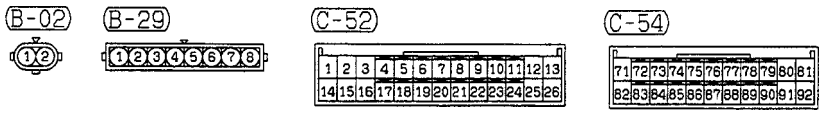

HR05M08BA

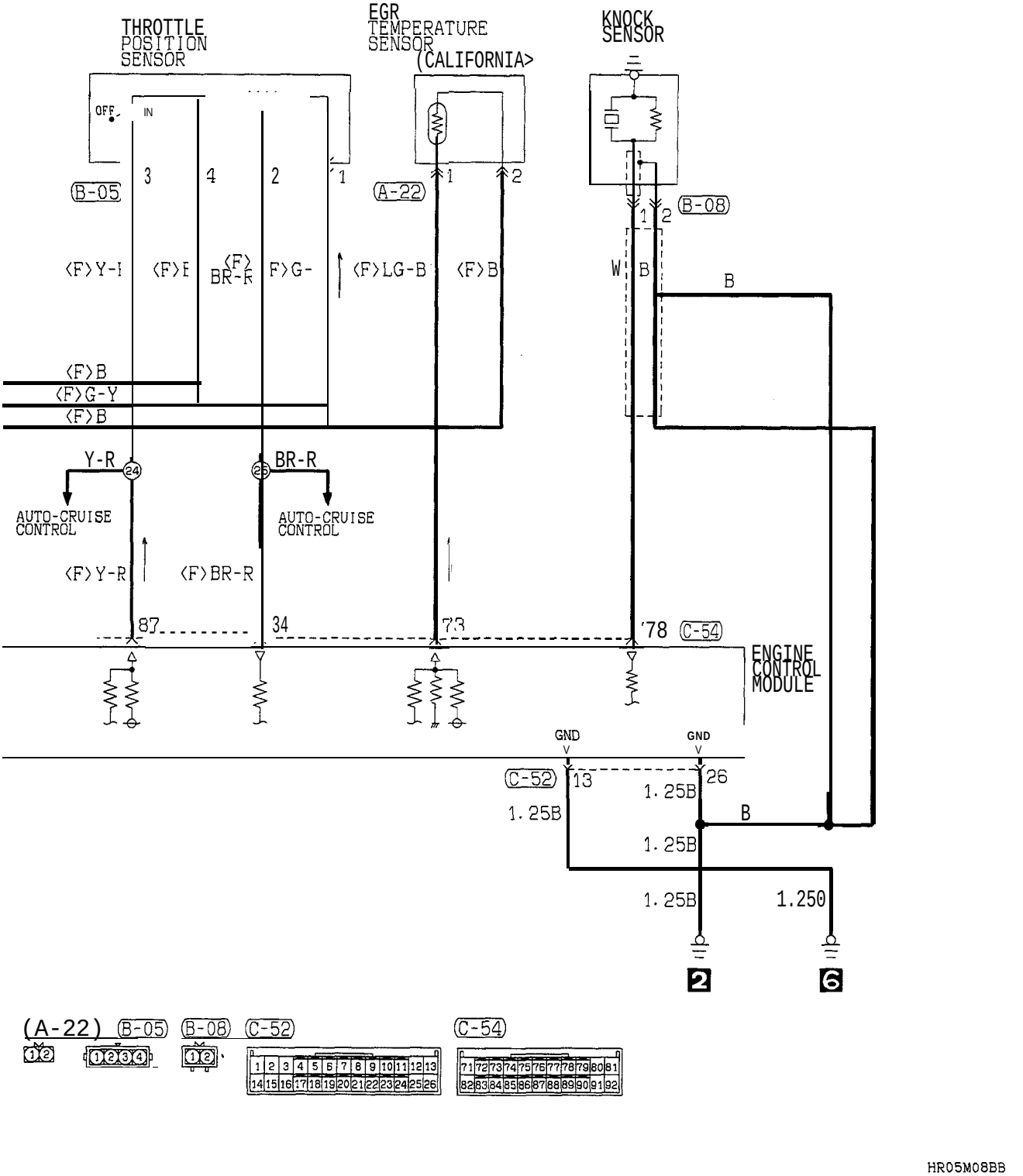
THROTTLE POSITION SENSOR
EGR TEMPERATURE SENSOR (CALIFORNIA>
KNOCK SENSOR
OFF
IN
B-05
A-22
B-08
C-54
C-52
ENGINE CONTROL MODULE
AUTO-CRUISE CONTROL
AUTO-CRUISE CONTROL
Y-R
BR-R
GND
GND
1.25B
1.250
(A-22)
(B-05)
(B-08)
(C-52)
(C-54)

HR05M08BB

MFI CIRCUIT (1995 MODELS) <TURBO> (CONTINUED)

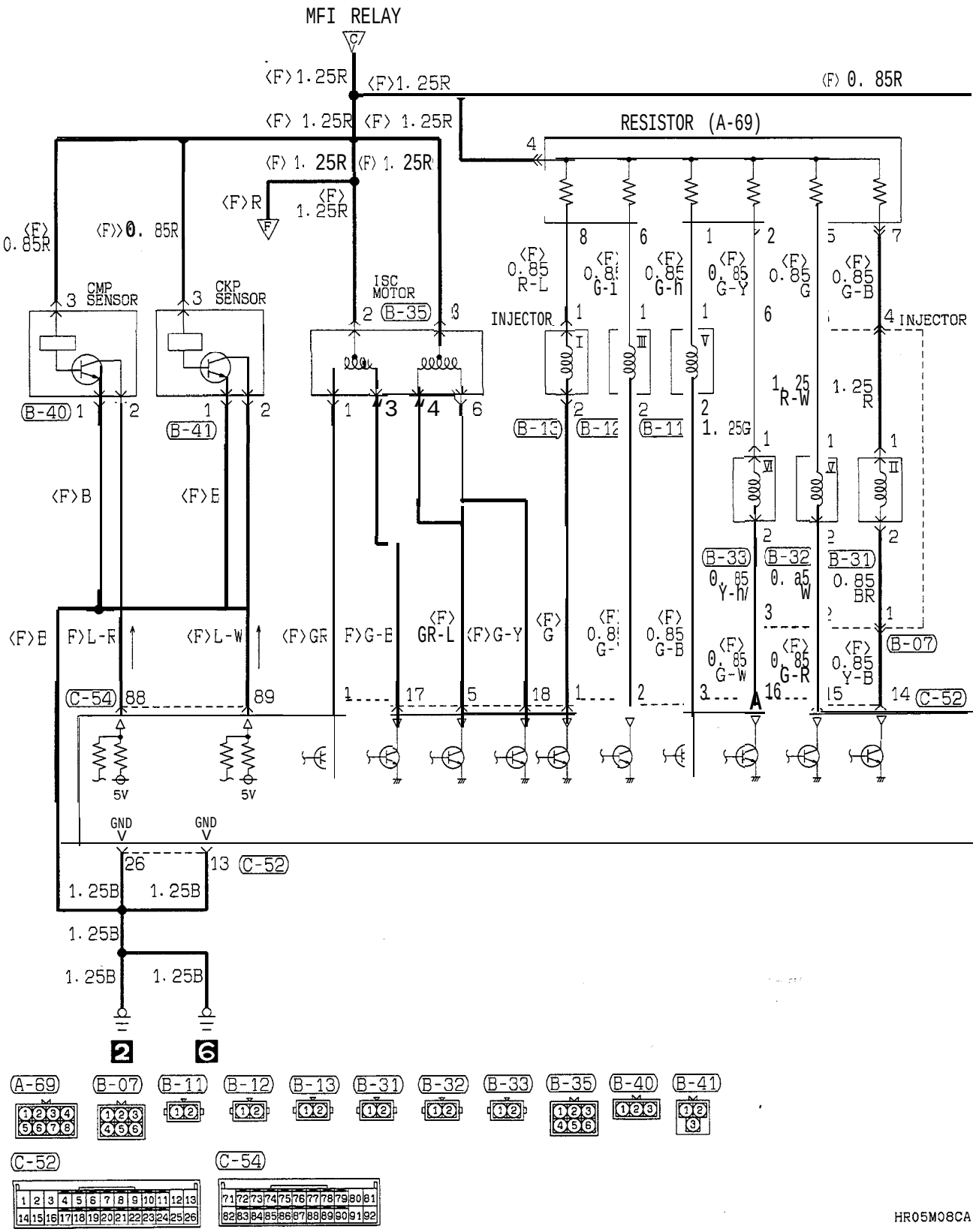

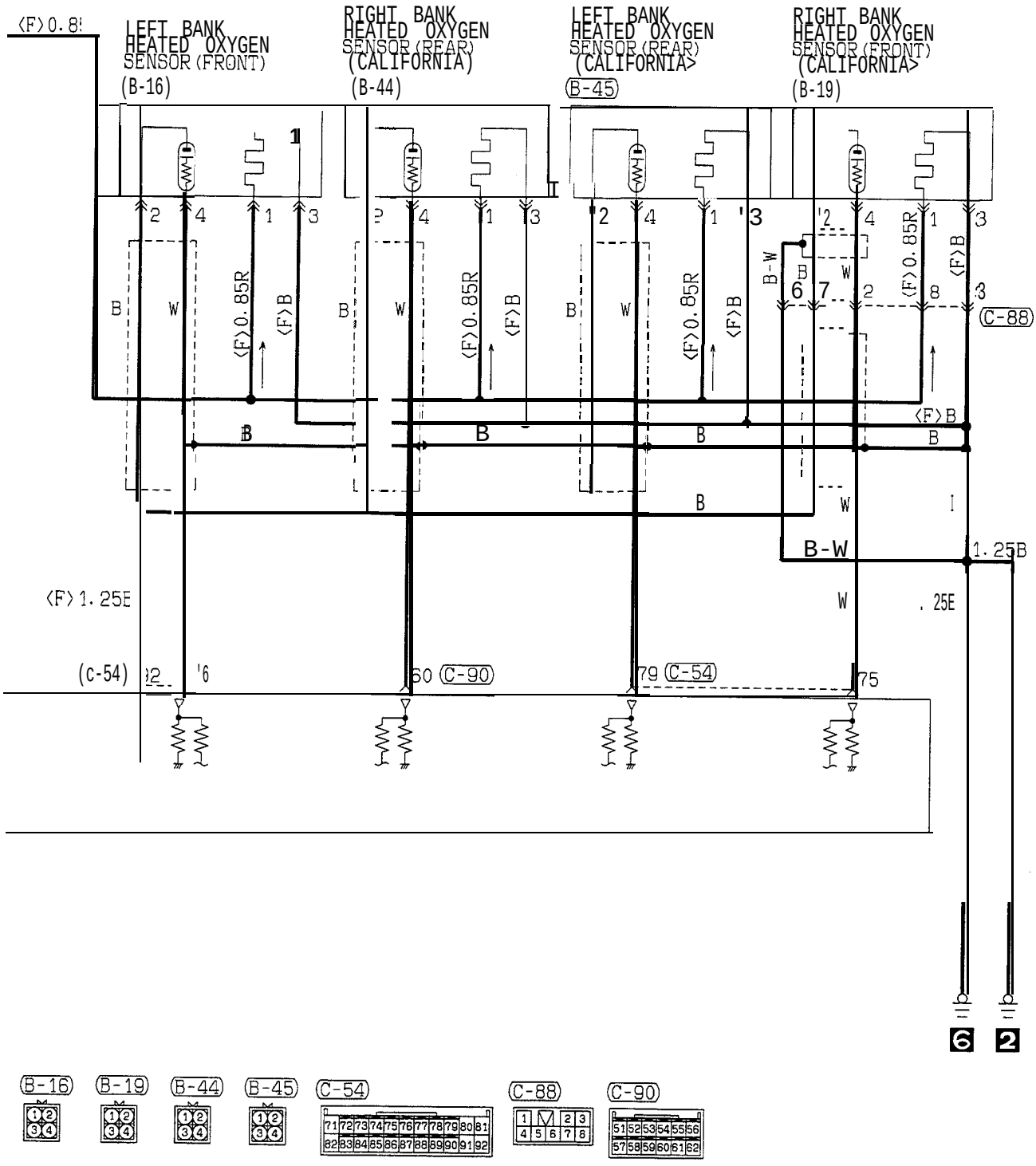
LEFT BANK HEATED OXYGEN SENSOR (FRONT) (B-16)
RIGHT BANK HEATED OXYGEN SENSOR (REAR) (CALIFORNIA) (B-44)
LEFT BANK HEATED OXYGEN SENSOR (REAR) (CALIFORNIA) (B-45)
RIGHT BANK HEATED OXYGEN SENSOR (FRONT) (CALIFORNIA) (B-19)
(C-88)
(C-54)
(C-90)
B-W
1.25B
6
2

B-16
B-19
B-44
B-45
C-54
C-88
C-90

HR05M08CB

MFI CIRCUIT (1995 MODELS) <TURBO> (CONTINUED)

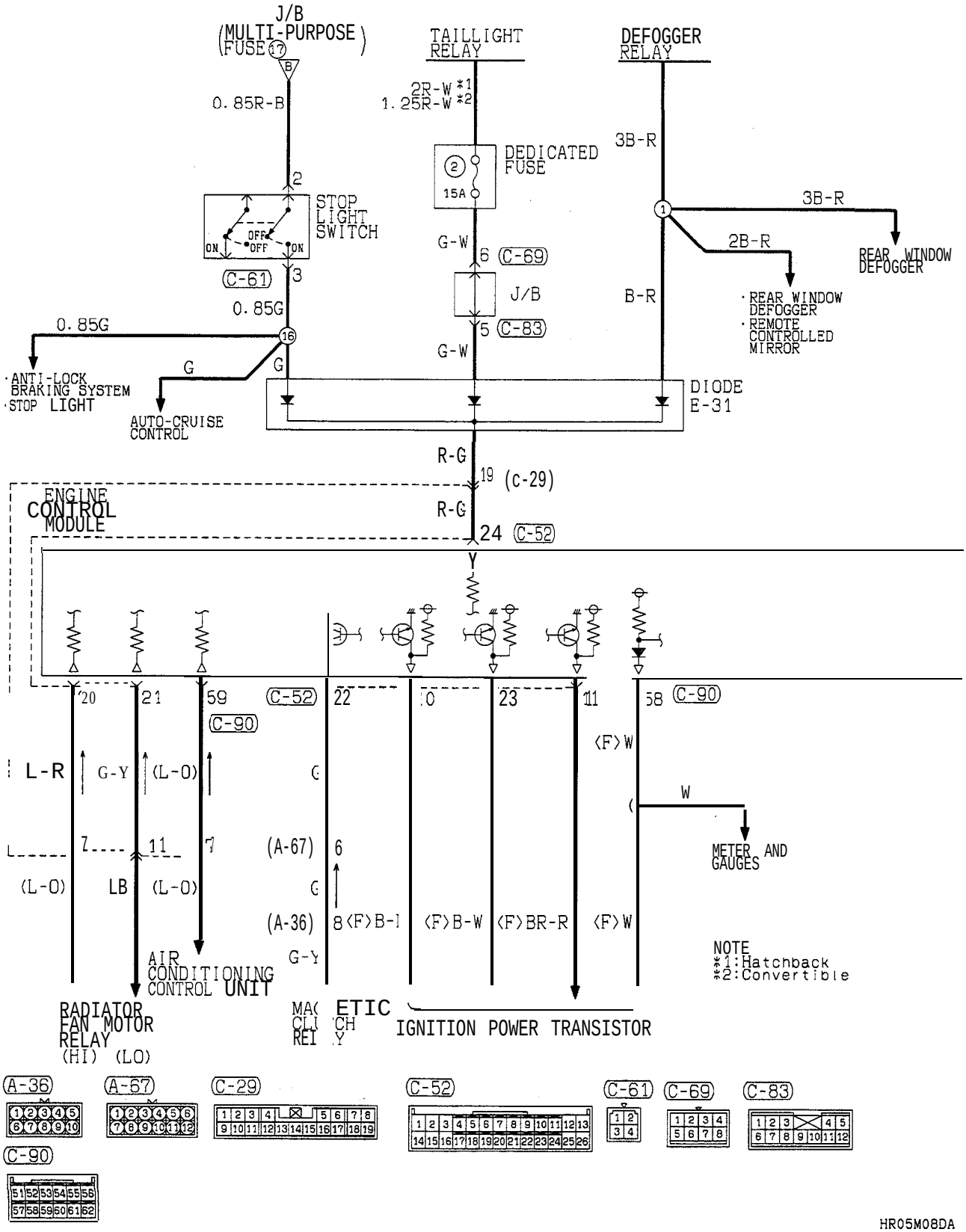

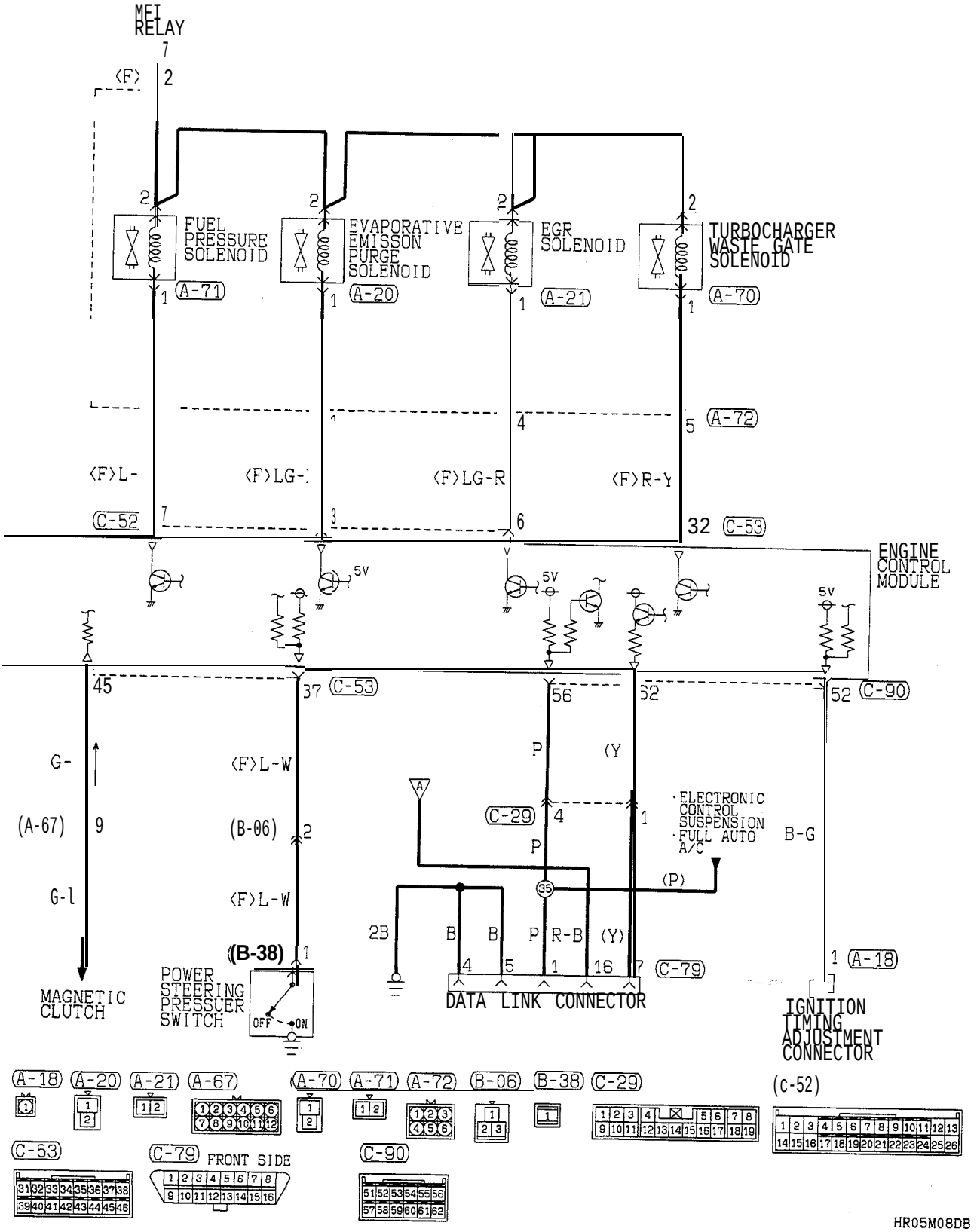
MFI RELAY
FUEL PRESSURE SOLENOID
EVAPORATIVE EMISSON PURGE SOLENOID
EGR SOLENOID
TURBOCHARGER WASTE GATE SOLENOID
A-71
A-20
A-21
A-70
A-72
C-52
C-53
ENGINE CONTROL MODULE
5V
C-90
C-29
C-79
ELECTRONIC CONTROL SUSPENSION
FULL AUTO A/C
MAGNETIC CLUTCH
POWER STEERING PRESSUER SWITCH
OFF
ON
B-38
DATA LINK CONNECTOR
A-18
IGNITION TIMING ADJOSIMENT CONNECTOR
A-67
B-06
FRONT SIDE
HR05M08DB

MFI CIRCUIT (FROM 1996 MODELS)

<NON TURBO>

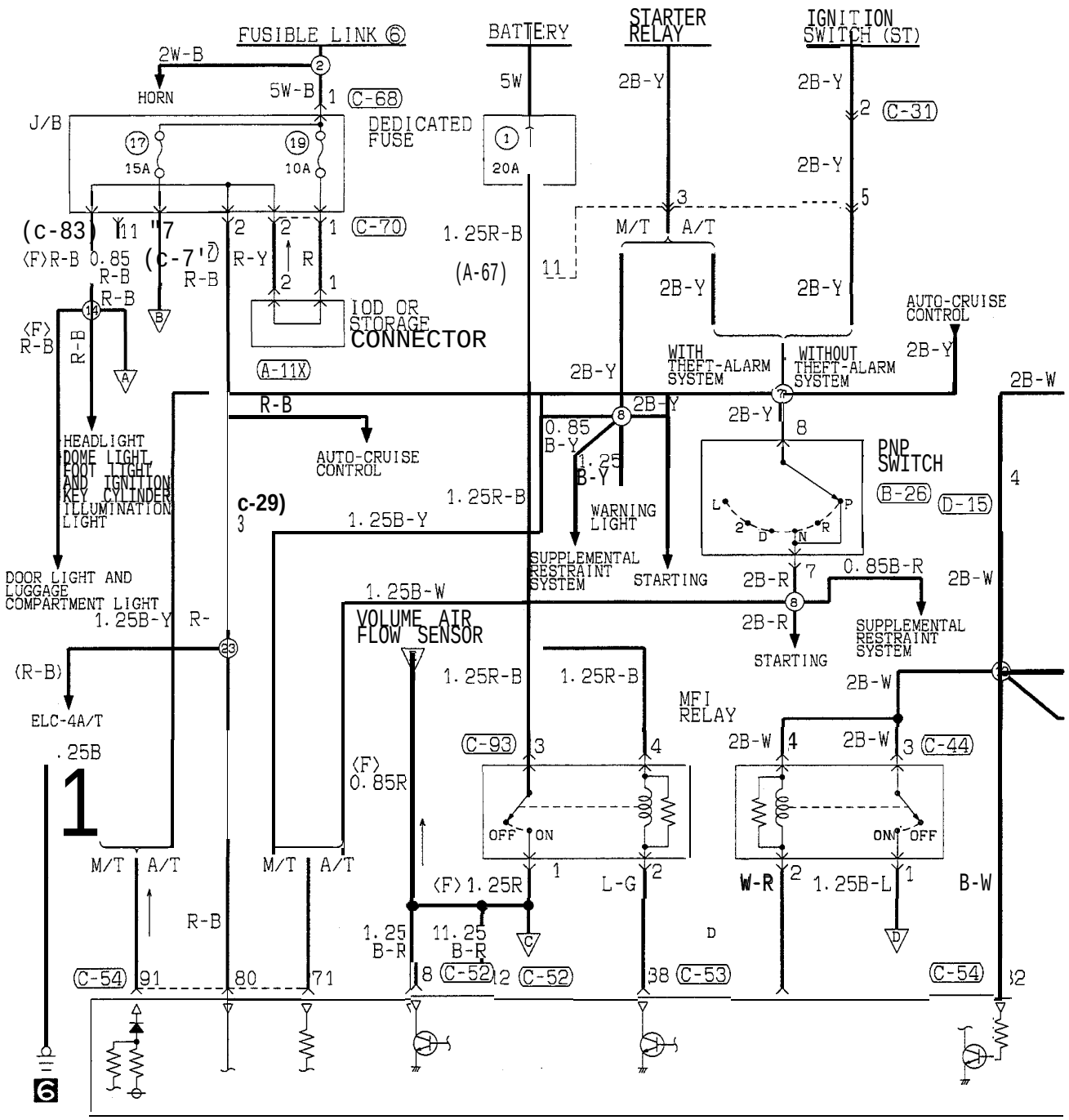

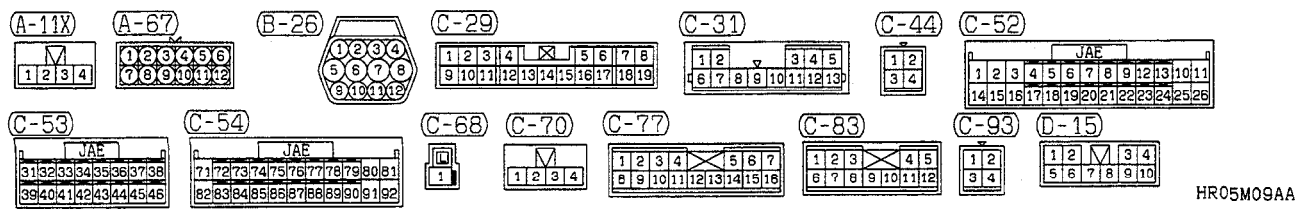

TSB Revision

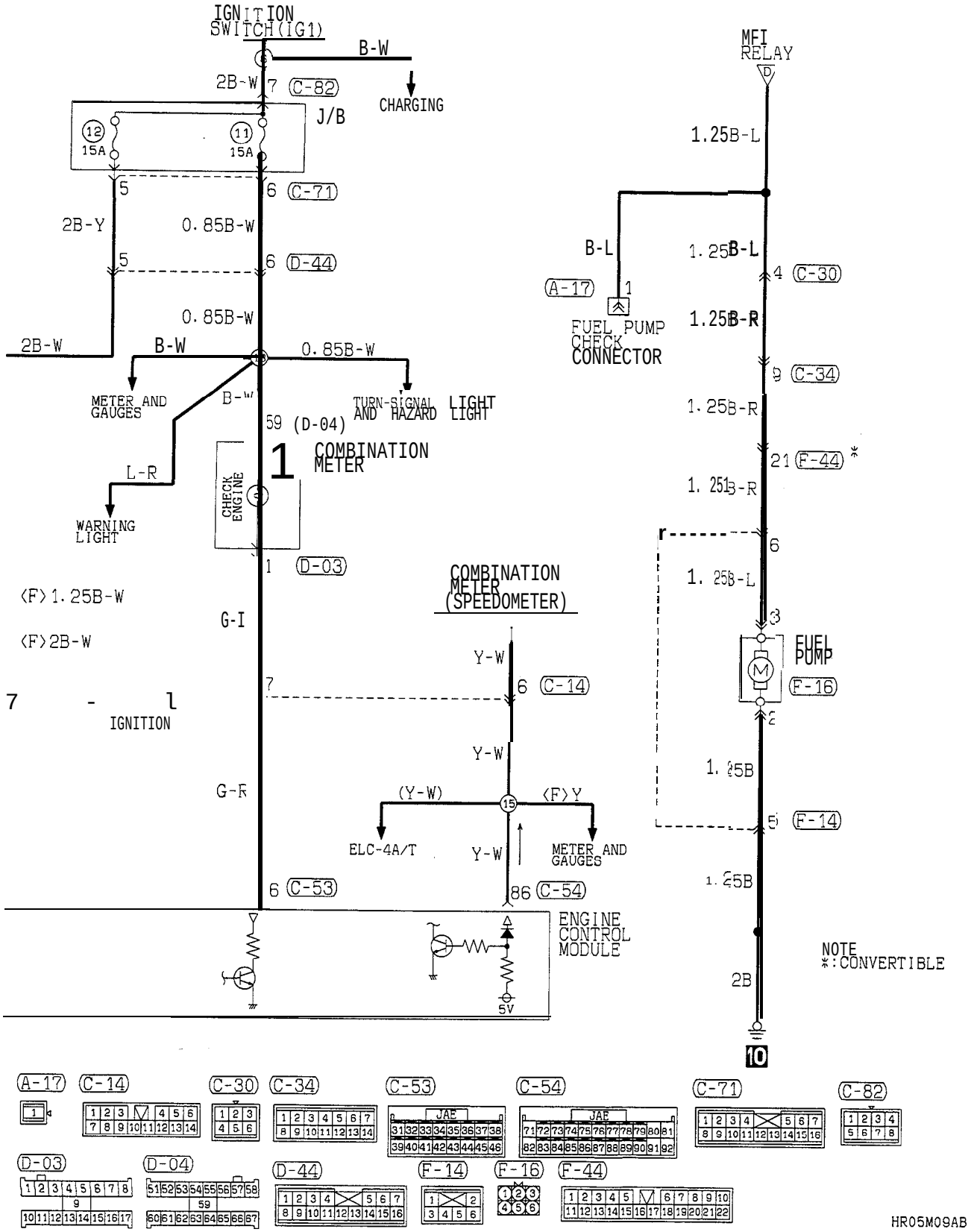
IGNITION SWITCH (IG1)
B-W
2B-W
7 (C-82)
CHARGING
J/B
12 15A
11 15A
5
6 (C-71)
2B-Y
0.85B-W
5
6 (D-44)
0.85B-W
2B-W
B-W
0.85B-W
METER AND GAUGES
B-W
TURN-SIGNAL LIGHT AND HAZARD LIGHT
59 (D-04)
1 COMBINATION METER
L-R
CHECK ENGINE
WARNING LIGHT
1 (D-03)
(F) 1.25B-W
(F) 2B-W
G-I
7 - l
IGNITION
G-R
COMBINATION METER (SPEEDOMETER)
Y-W
7
6 (C-14)
Y-W
(Y-W)
15
(F) Y
ELC-4A/T
Y-W
METER AND GAUGES
6 (C-53)
86 (C-54)
ENGINE CONTROL MODULE
5V
MFI RELAY
D
1.25B-L
B-L
1.25B-L
4 (C-30)
(A-17)
1
FUEL PUMP CHECK CONNECTOR
1.25B-R
9 (C-34)
1.25B-R
21 (F-44) *
1.25B-R
6
1.25B-L
3
FUEL PUMP
M
(F-16)
2
1.25B
5 (F-14)
1.25B
2B
10
NOTE
*: CONVERTIBLE
(A-17)
(C-14)
(C-30)
(C-34)
(C-53)
JAE
(C-54)
JAE
(C-71)
(C-82)
(D-03)
(D-04)
(D-44)
(F-14)
(F-16)
(F-44)
HR05M09AB

MFI CIRCUIT (FROM 1996 MODELS) <NON TURBO> (CONTINUED)

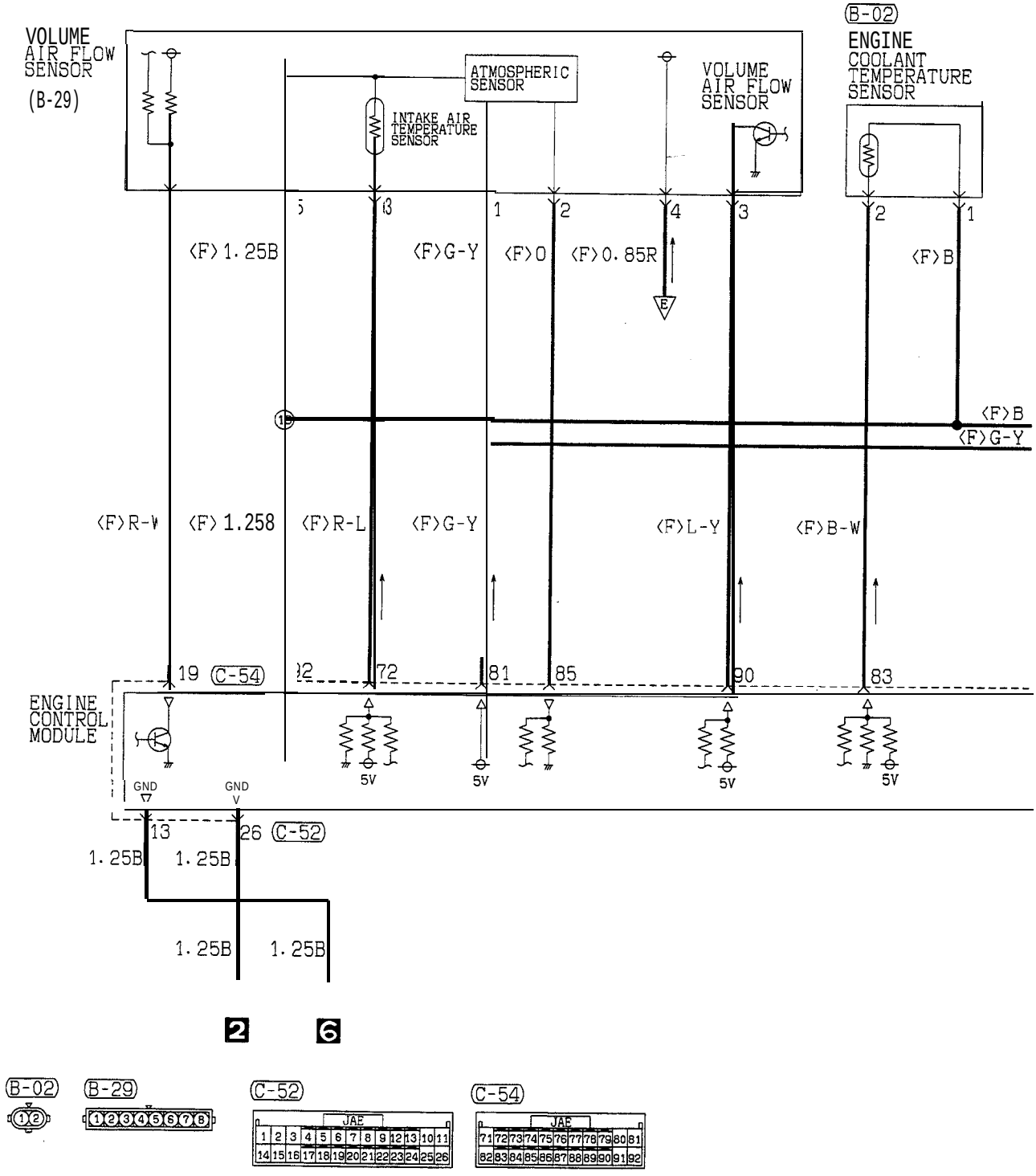

HR05M09BA

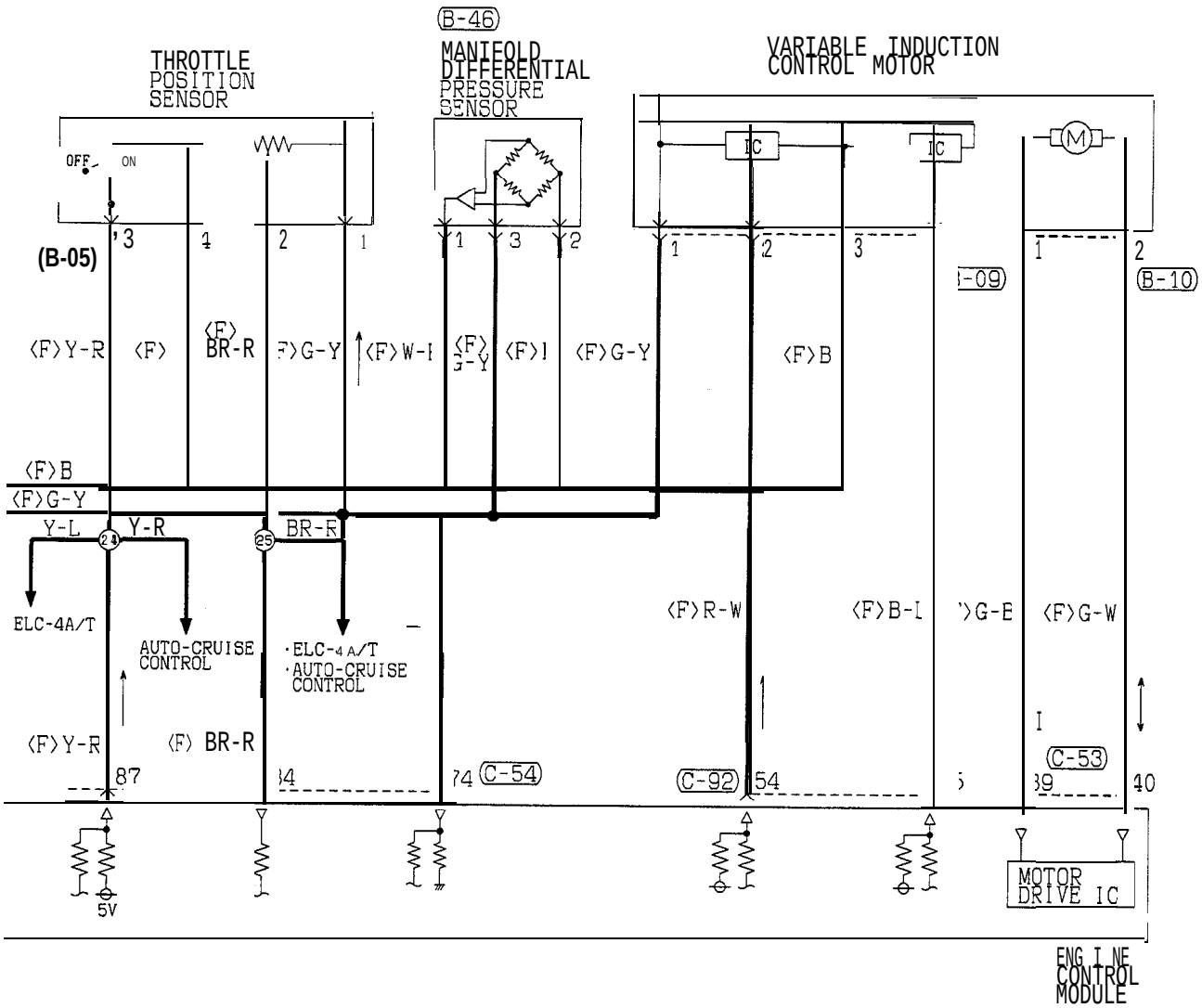
B-46
THROTTLE POSITION SENSOR
MANIFOLD DIFFERENTIAL PRESSURE SENSOR
VARIABLE INDUCTION CONTROL MOTOR
OFF
ON
(B-05)
B-09
B-10
(F)Y-R
(F)
(F) BR-R
(F)G-Y
(F)W-I
(F)I
(F)G-Y
(F)B
(F)B
(F)G-Y
Y-L
Y-R
BR-R
ELC-4A/T
AUTO-CRUISE CONTROL
·ELC-4A/T
·AUTO-CRUISE CONTROL
(F)R-W
(F)B-L
(F)G-W
(F)Y-R
(F) BR-R
C-54
C-92
C-53
5V
MOTOR DRIVE IC
ENGINE CONTROL MODULE

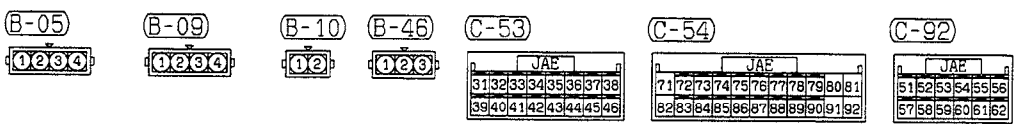
B-05
B-09
B-10
B-46
C-53
C-54
C-92
JAE

HR05M09BB

MFI CIRCUIT (FROM 1996 MODELS) <NON TURBO> (CONTINUED)

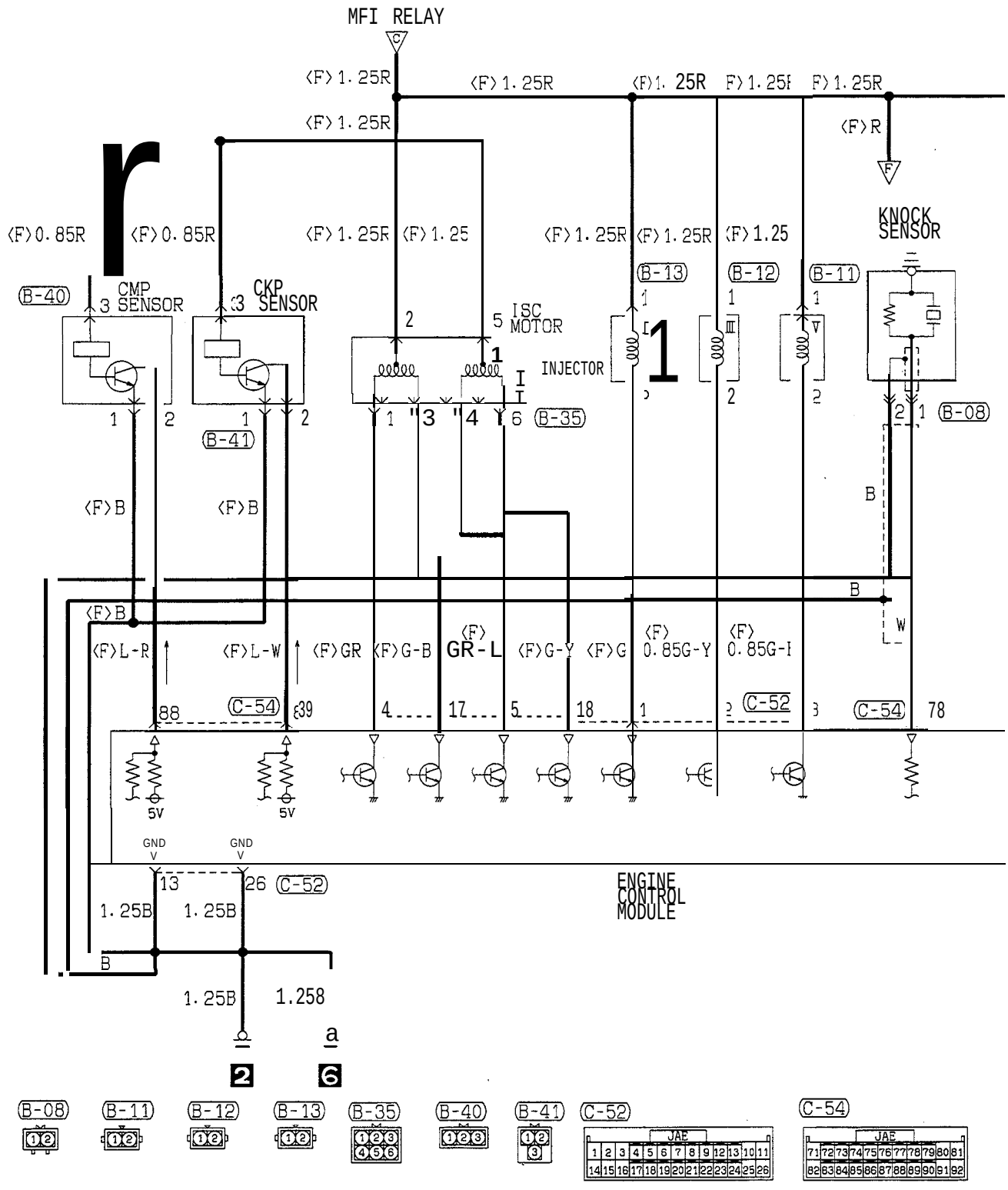

HR05M09CA

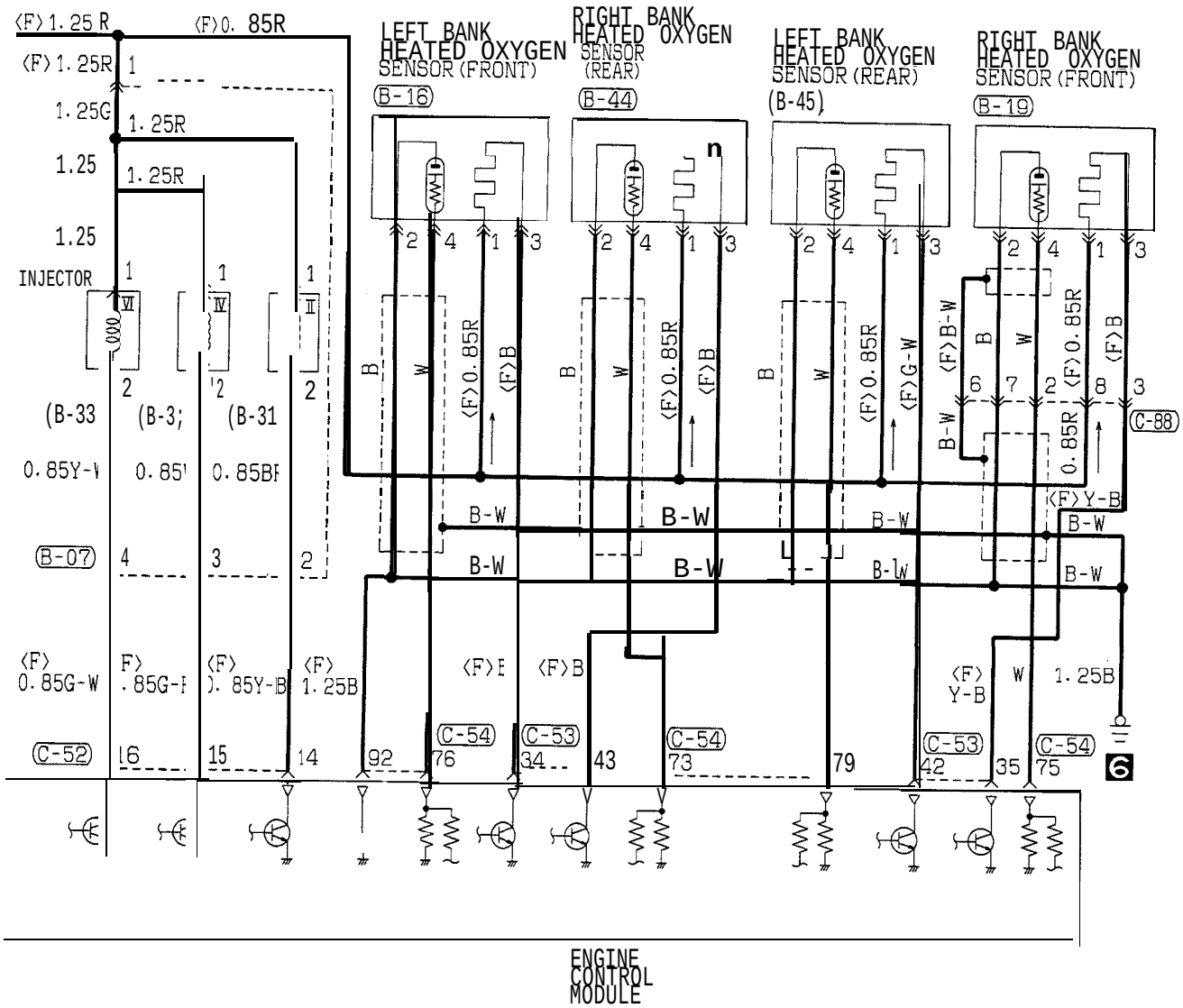
LEFT BANK HEATED OXYGEN SENSOR (FRONT)
RIGHT BANK HEATED OXYGEN SENSOR (REAR)
LEFT BANK HEATED OXYGEN SENSOR (REAR)
RIGHT BANK HEATED OXYGEN SENSOR (FRONT)
B-16
B-44
(B-45)
B-19
INJECTOR
(B-33
(B-31
B-07
C-52
C-54
C-53
C-88
B-W
ENGINE CONTROL MODULE

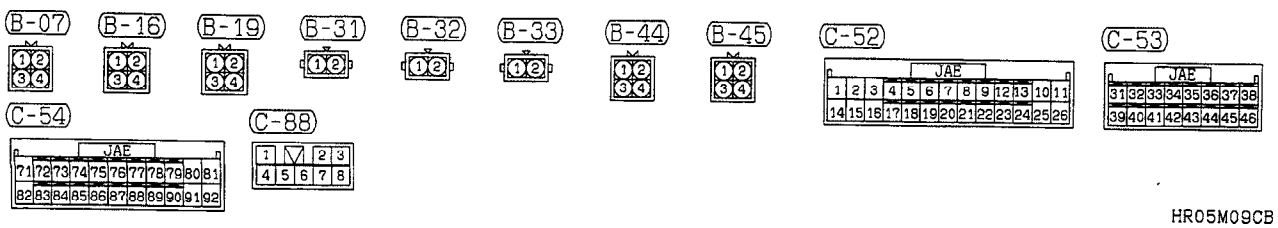
B-07
B-16
B-19
B-31
B-32
B-33
B-44
B-45
C-52
C-53
C-54
C-88
JAE

HR05M09CB

MFI CIRCUIT (FROM 1996 MODELS) <NON TURBO> (CONTINUED)

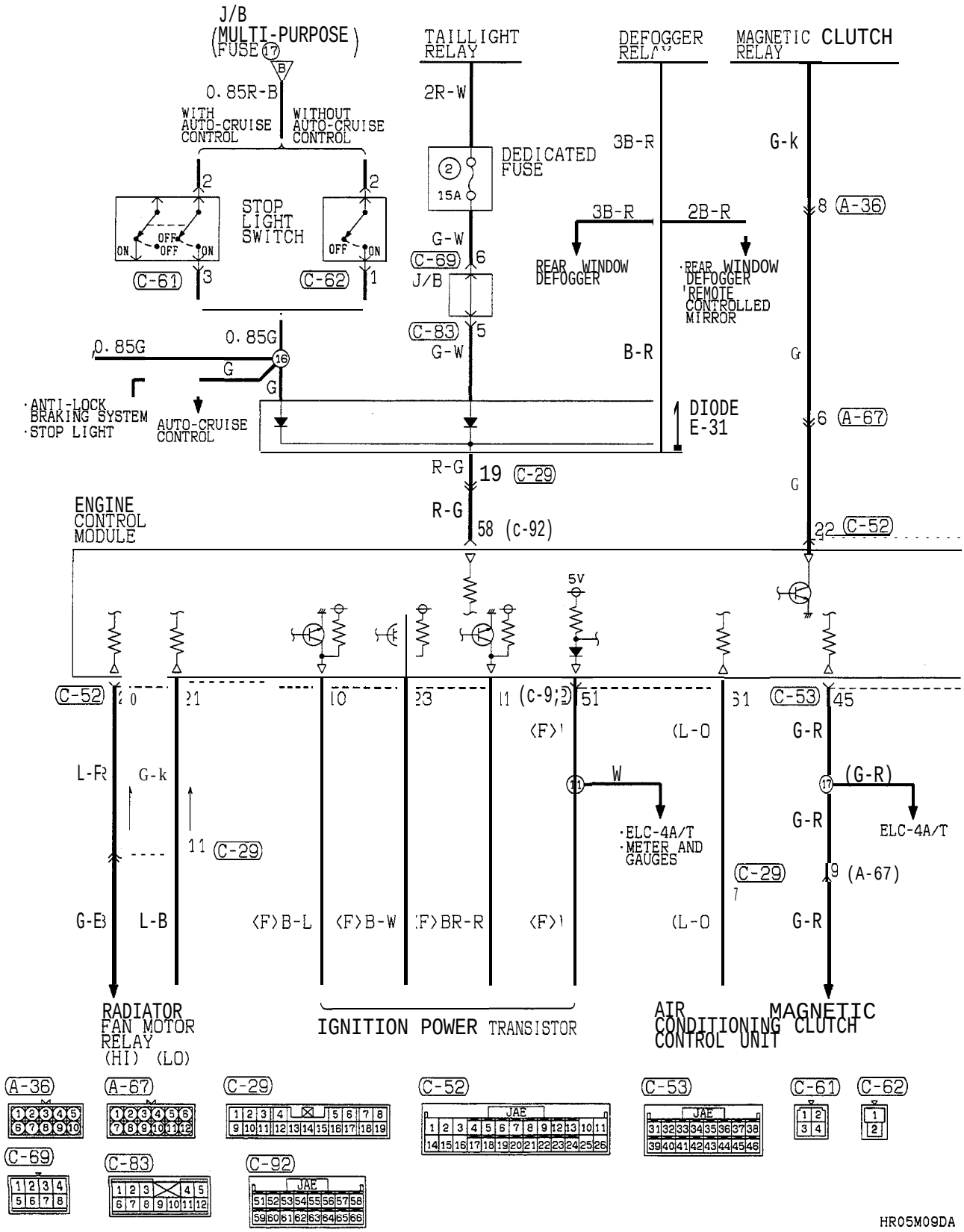

TSB Revision

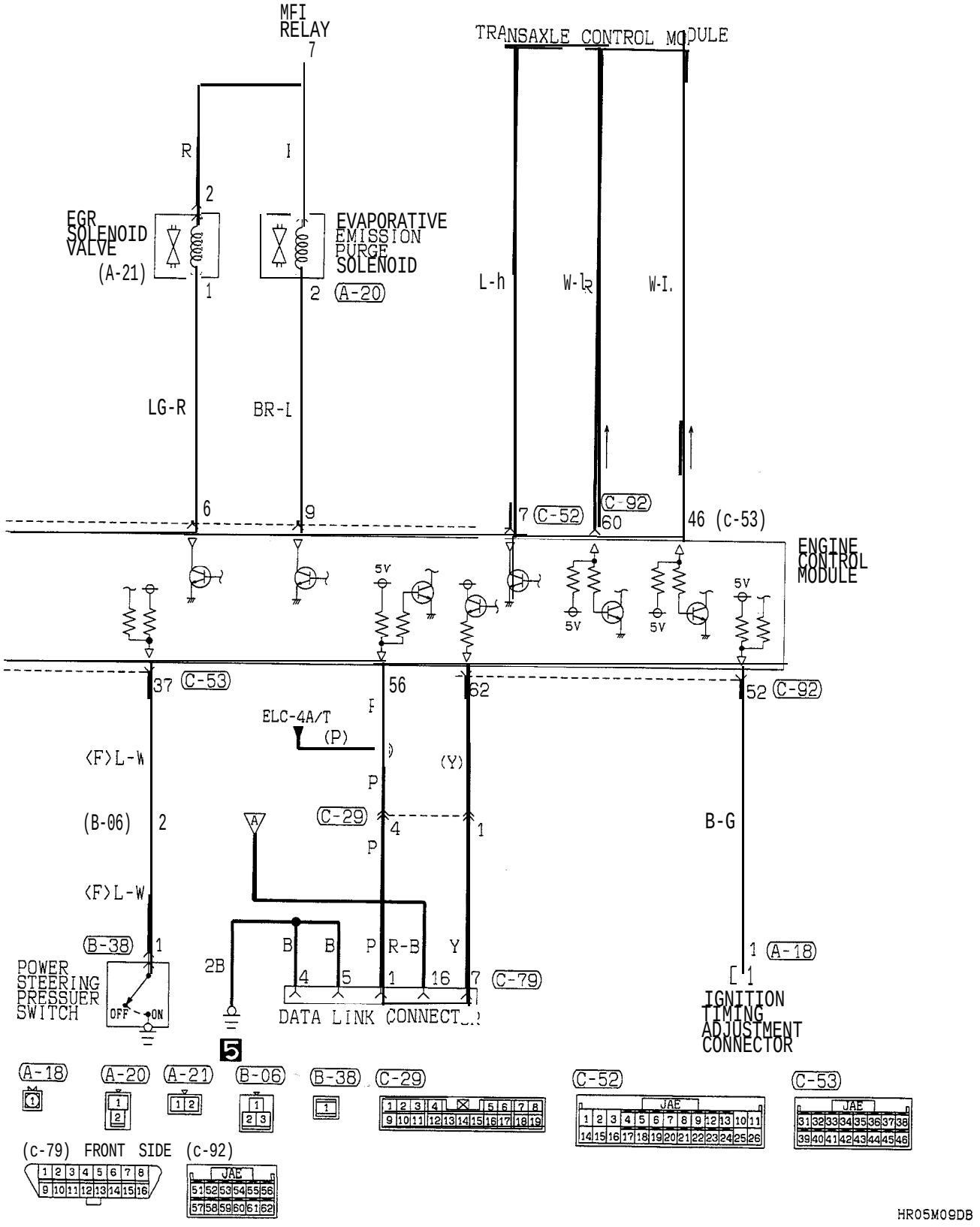

TSB Revision

MFI CIRCUIT (FROM 1996 MODELS)

<TURBO>

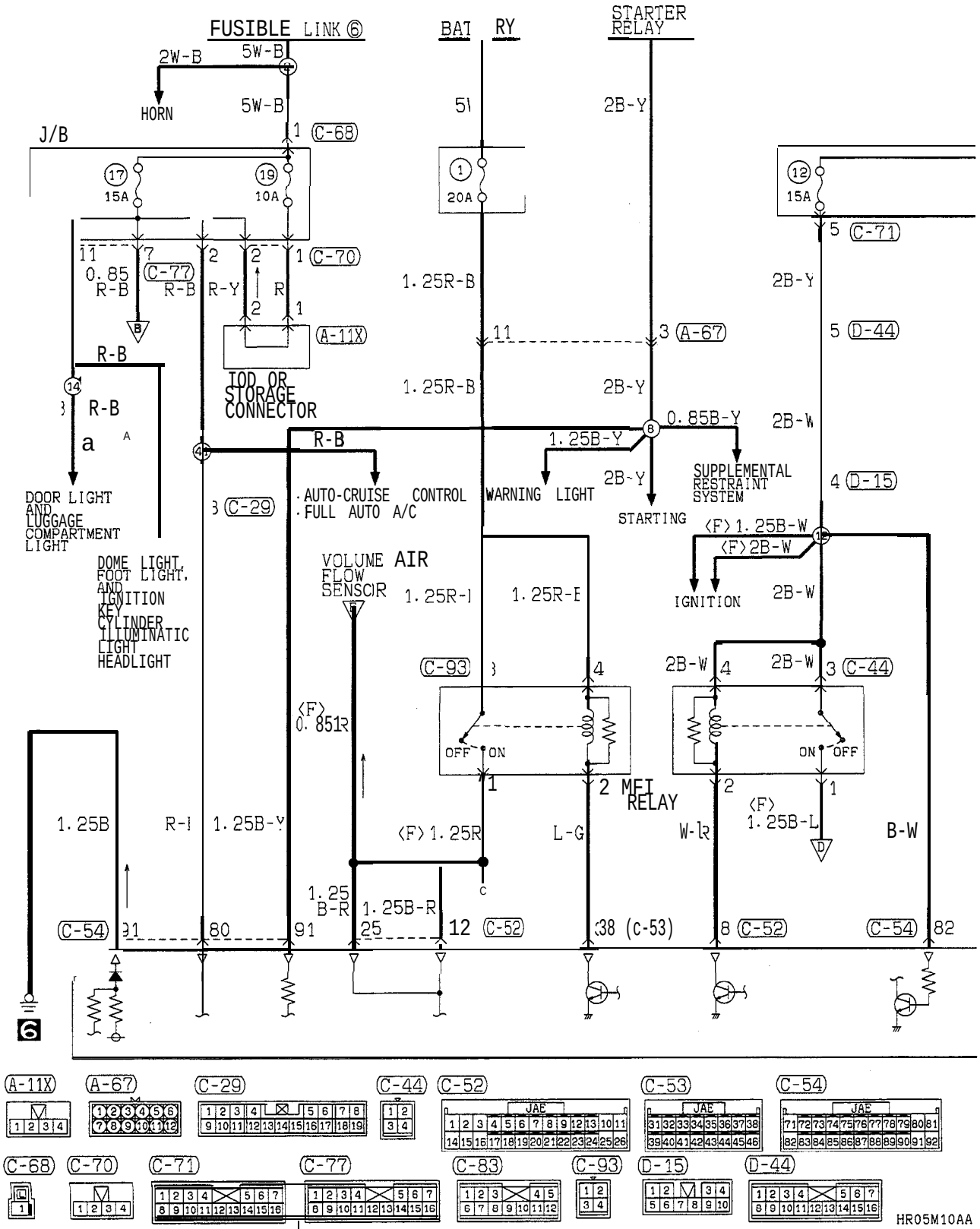

TSB Revision

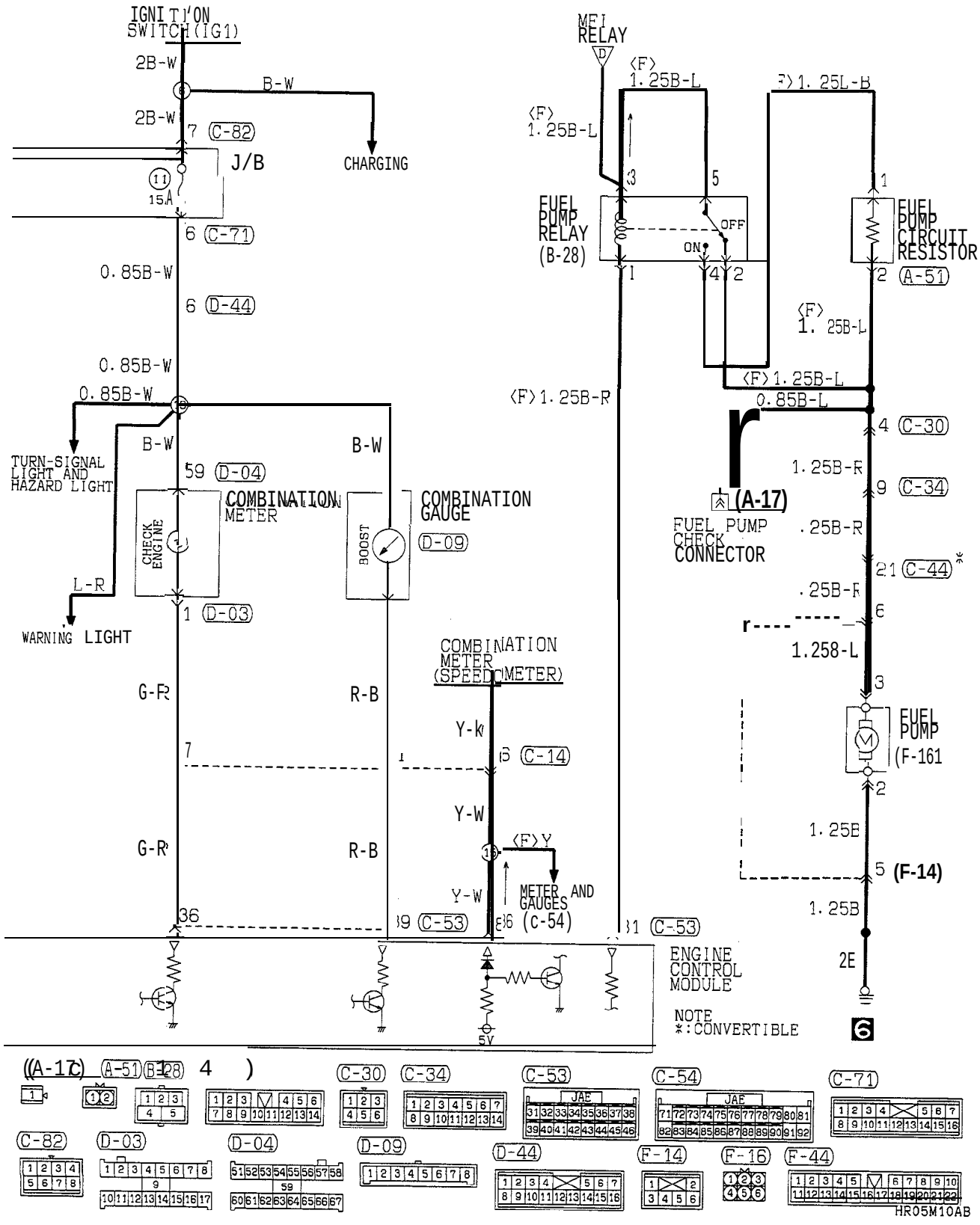

TSB Revision

MFI CIRCUIT (FROM 1996 MODELS) <TURBO> (CONTINUED)

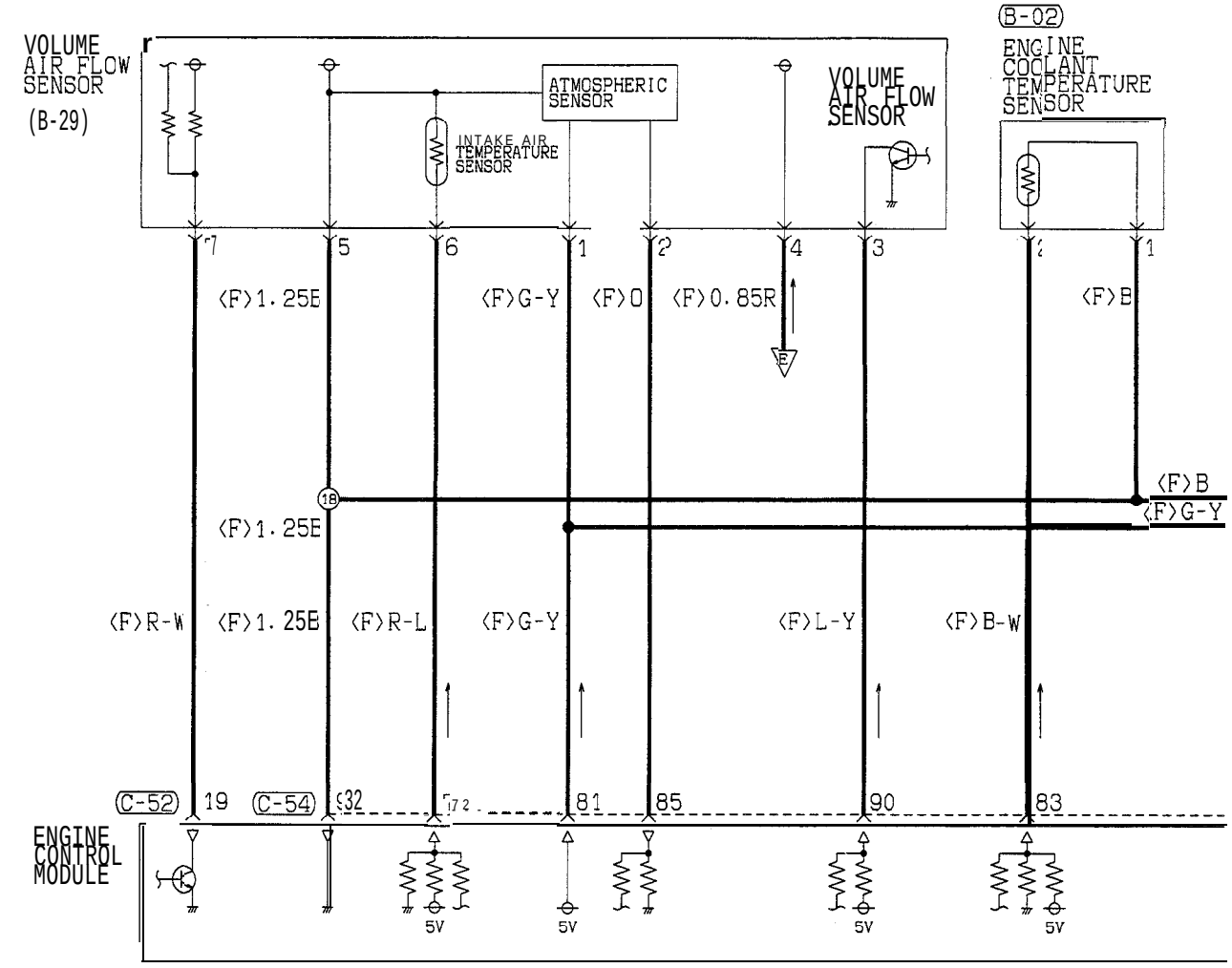

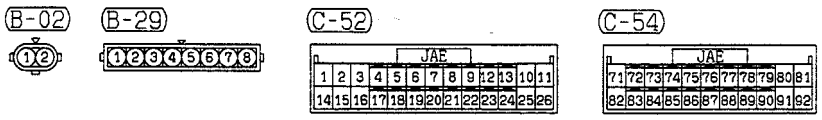

HR05M10BA

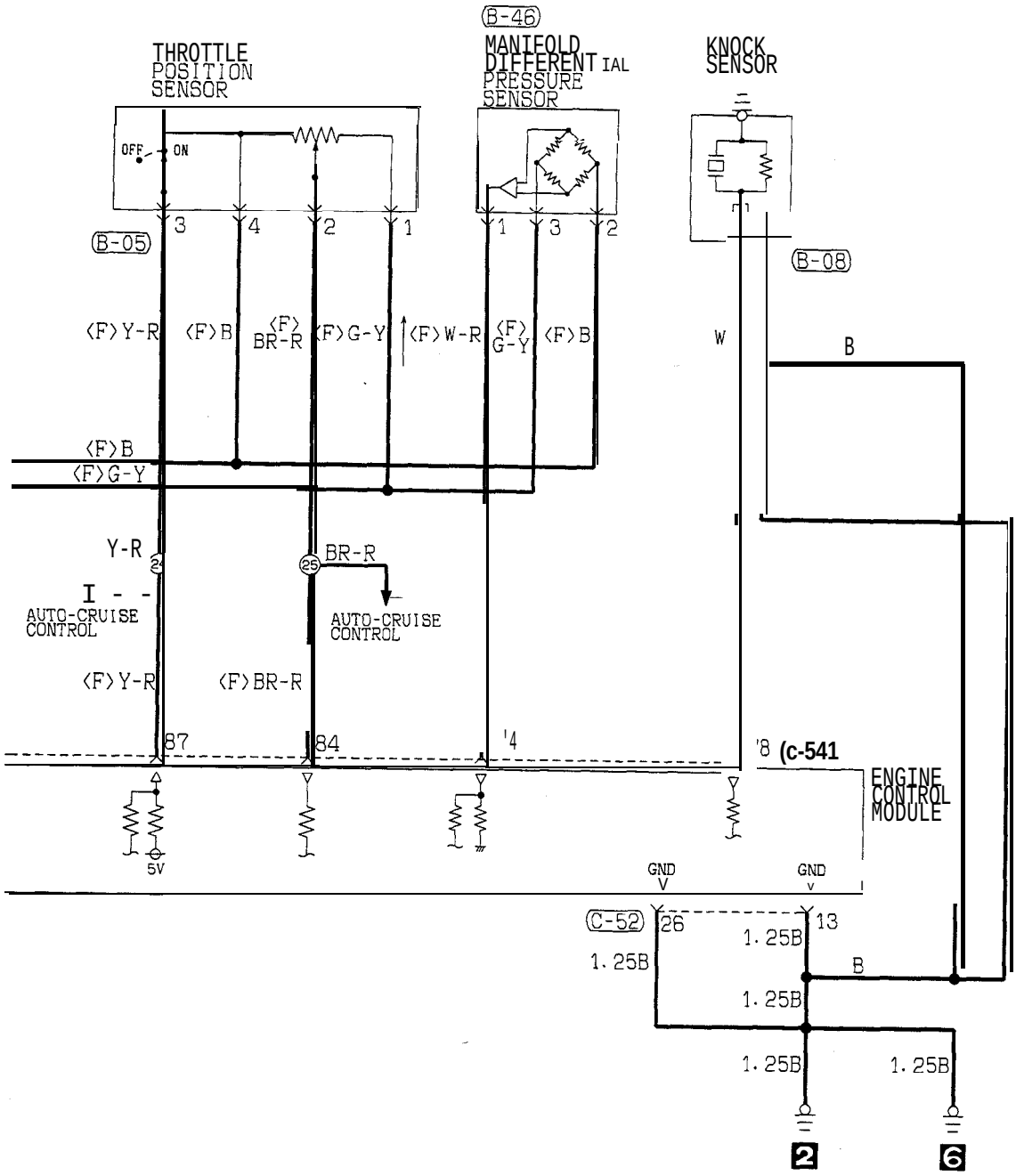

(A-22) (B-05) (B-08) (B-46) (c-52) (C-54)

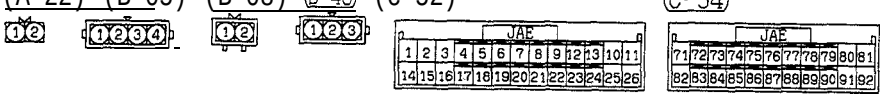

HR05M10BB

MFI CIRCUIT (FROM 1996 MODELS) <TURBO> (CONTINUED)

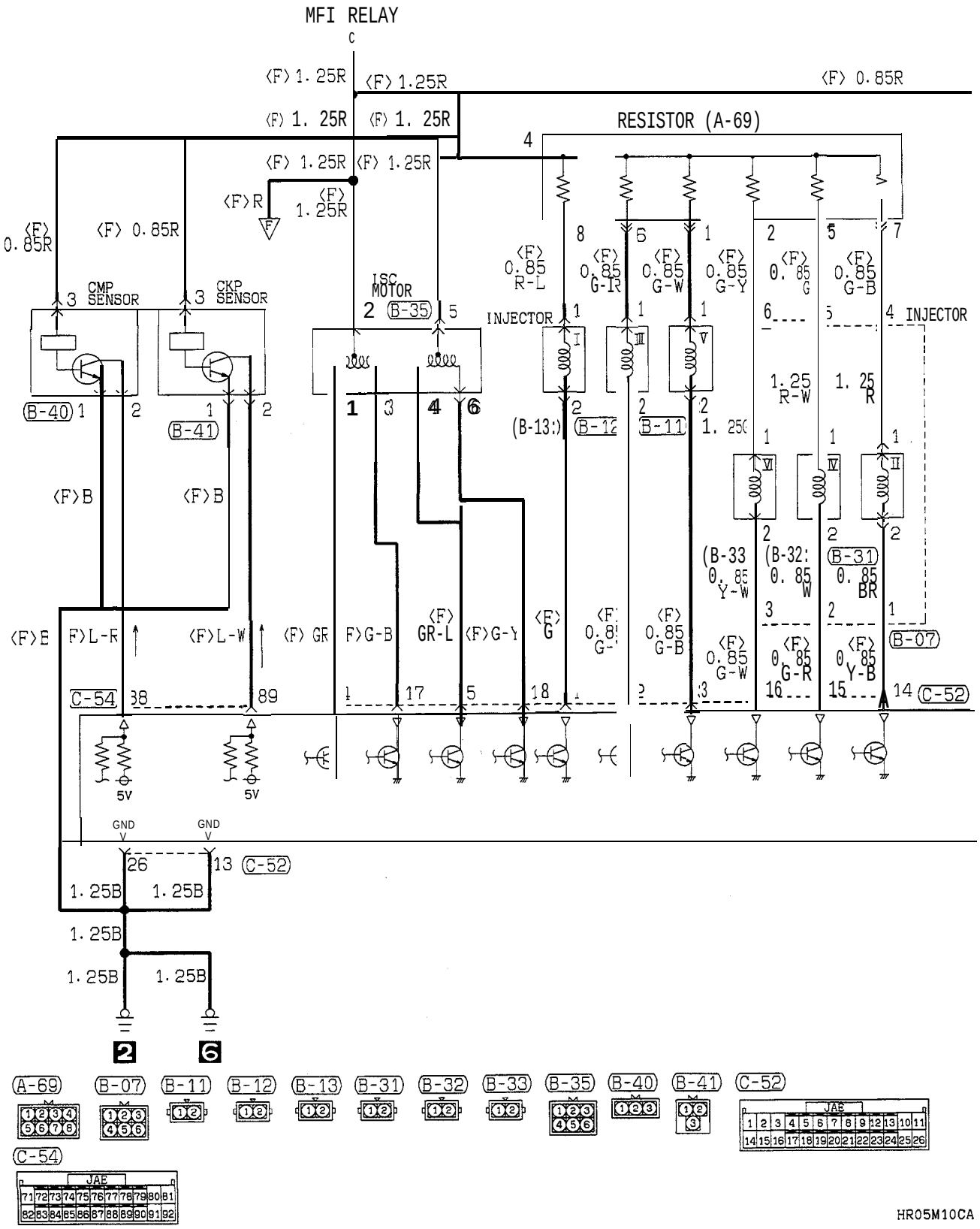

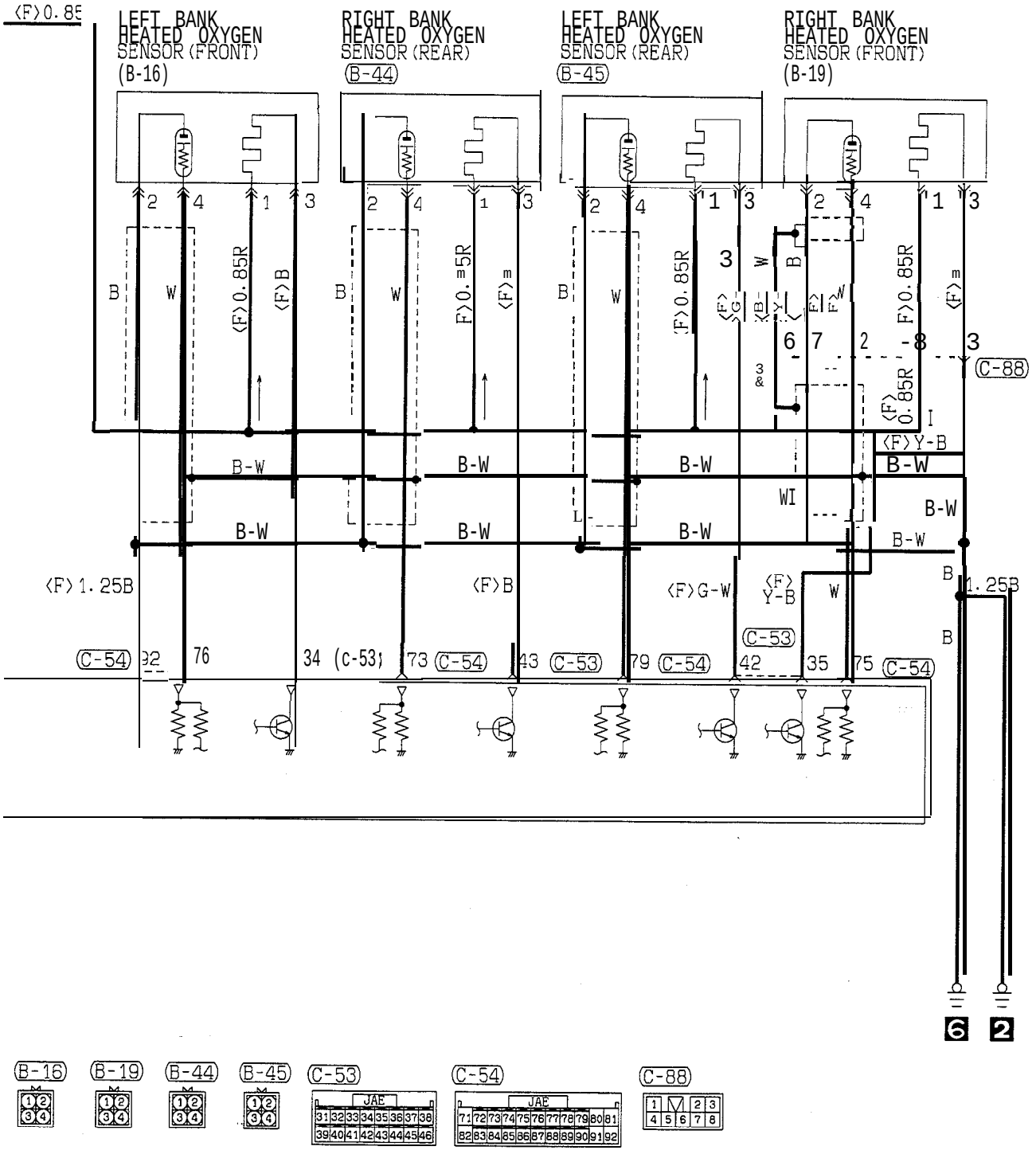
LEFT BANK HEATED OXYGEN SENSOR (FRONT) (B-16)
RIGHT BANK HEATED OXYGEN SENSOR (REAR) (B-44)
LEFT BANK HEATED OXYGEN SENSOR (REAR) (B-45)
RIGHT BANK HEATED OXYGEN SENSOR (FRONT) (B-19)
B-W
<F>1.25B
<F>B
<F>G-W
<F>Y-B
<F>0.85R
C-54
C-53
C-88
76
34
73
43
79
42
35
75
6
2

B-16
B-19
B-44
B-45
C-53
C-54
C-88
JAE

HR05M10CB

MFI CIRCUIT (FROM 1996 MODELS) <TURBO> (CONTINUED)

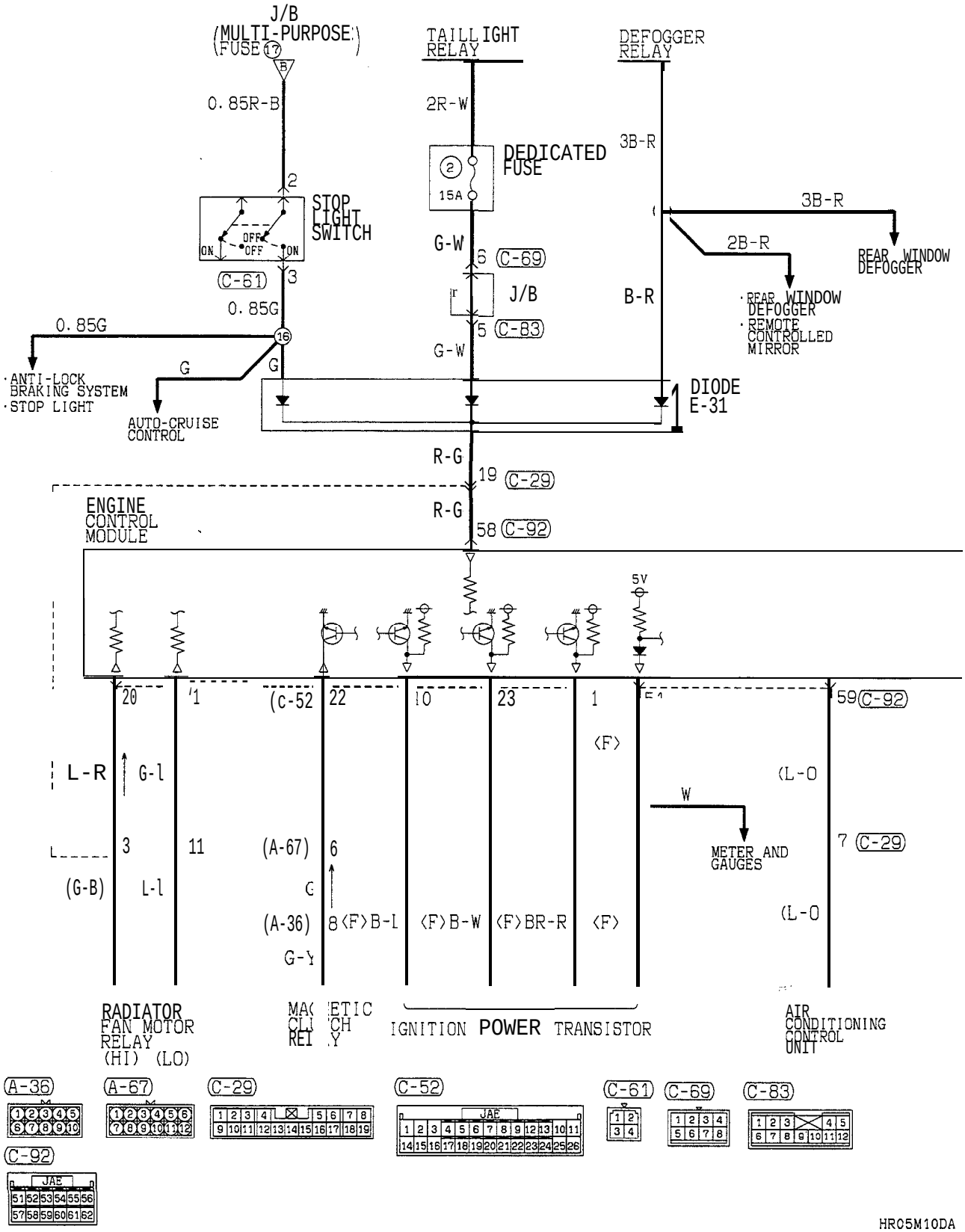

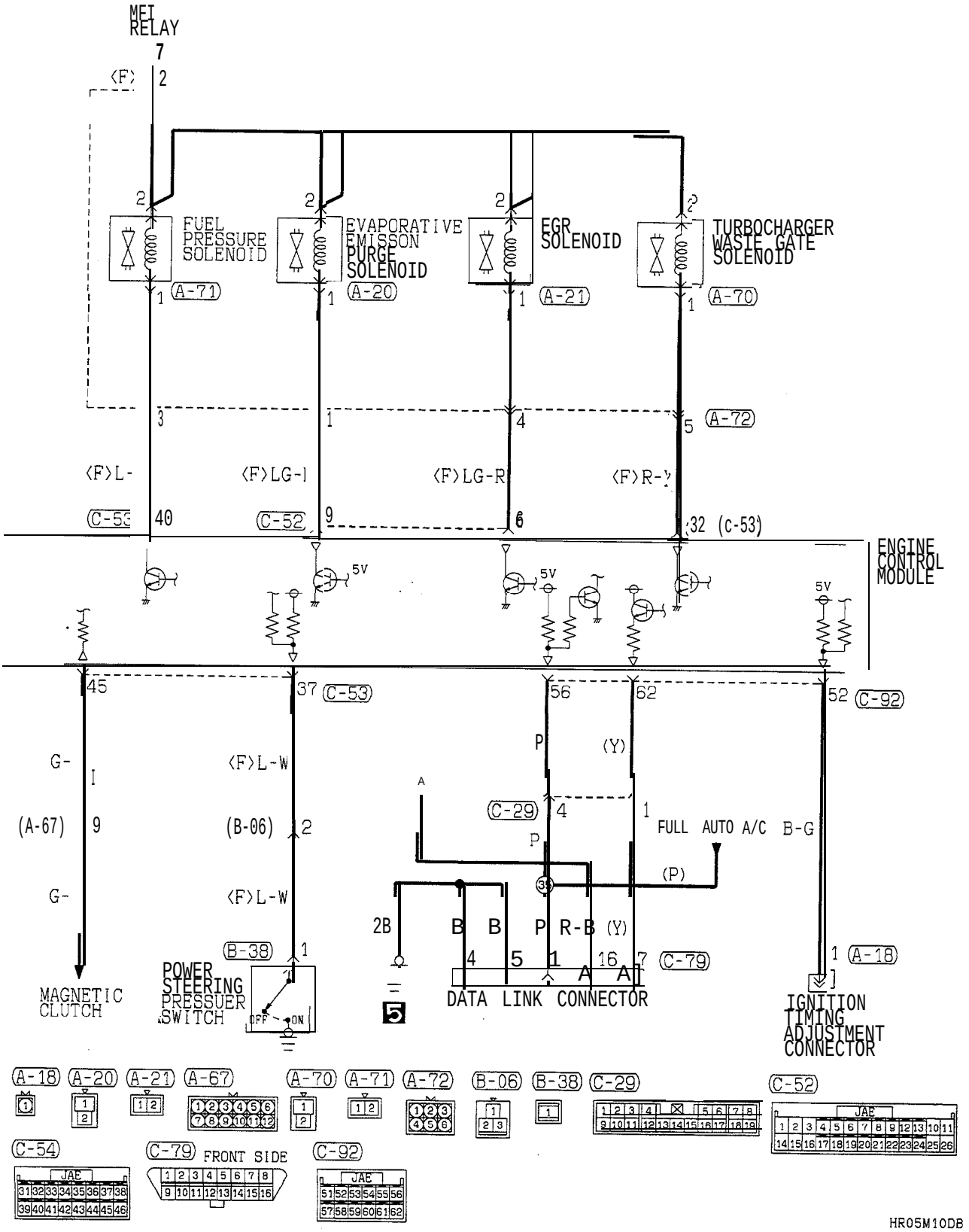

TSB Revision

COMPONENT LOCATION

Up to 1993 models and 1994, 1995 models Non Turbo (Federal)

Name	Symboll	Name	Symbol
Air conditioning relay	0	Ignition coil (ignition power transistor)	M
Air conditioning switch	G	Ignition timing adjusting terminal	Q
Camshaft position sensor	a	Injector	K
Check engine/malfunction indicator lamp	P	Knock sensor	T
Crankshaft position sensor	D	Multiport fuel injection (MFI) relay	N
Data link connector	R	Data link connector	R
EGR solenoid <California – Non Turbo, Turbo>	Z	Park/Neutral position switch <A/T>	I
EGR temperature sensor <California – Non Turbo, Turbo>	Y	Power steering pressure switch	H
Engine control module	S	Resistor <Turbo>	W
Engine coolant temperature sensor	B	Throttle position sensor (With built-in closed throttle position switch)	C
Evaporative emission purge solenoid	X	Turbocharger waste gate solenoid <Turbo>	U
Fuel pressure solenoid <Turbo>	V	Variable induction control motor (DC motor) (with built-in induction control valve position sensor) <Non Turbo>	J
Heated oxygen sensor	E	Vehicle speed sensor	F
Idle air control motor (stepper motor)	L	Volume air flow sensor (with built-in intake air temperature sensor and barometric pressure sensor)	A

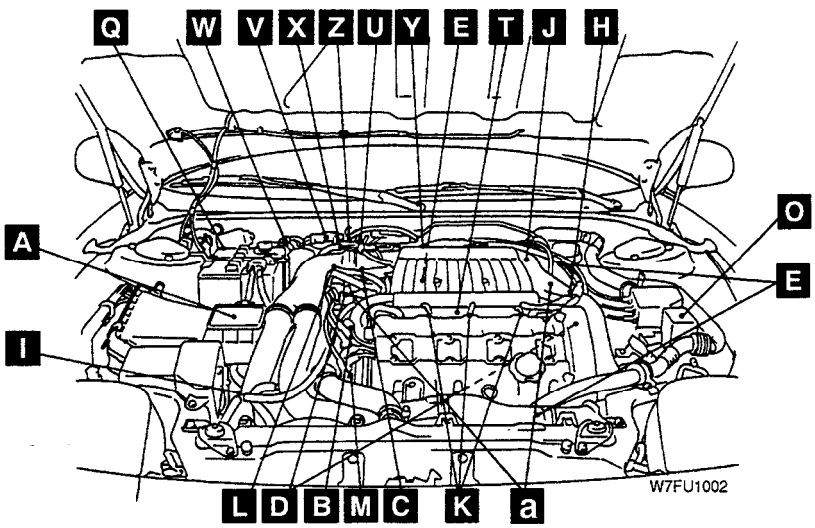

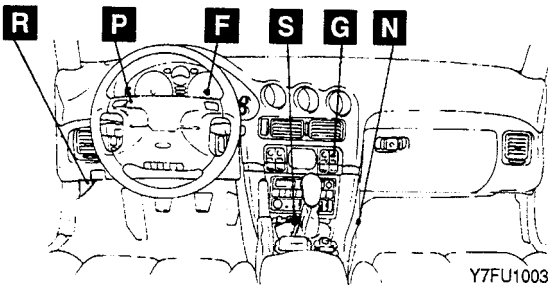

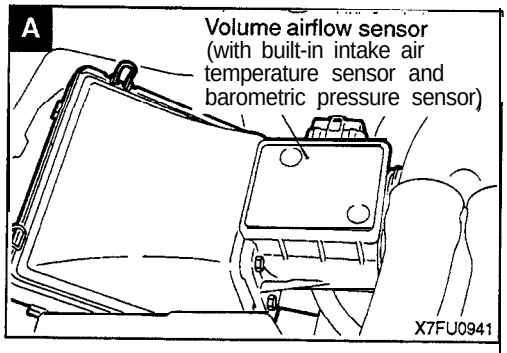

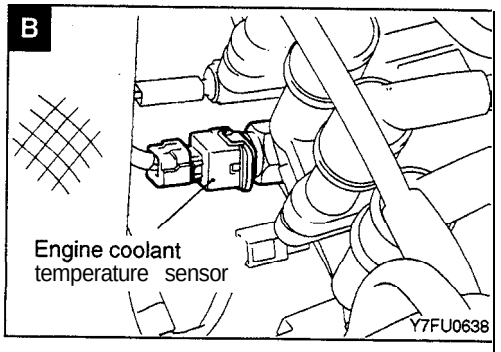

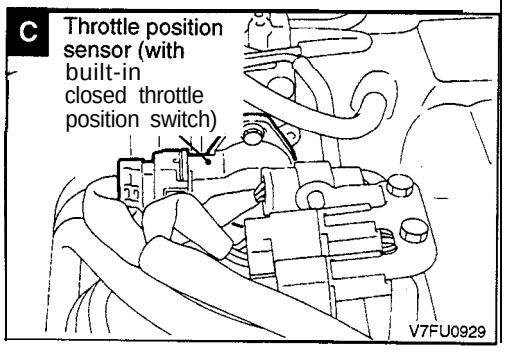

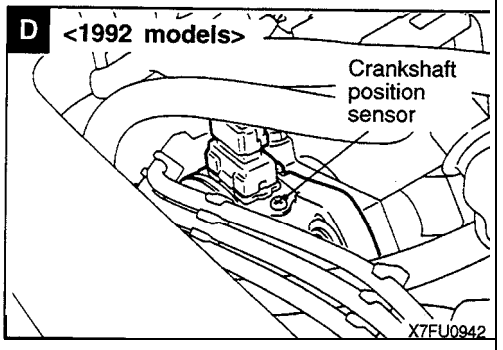

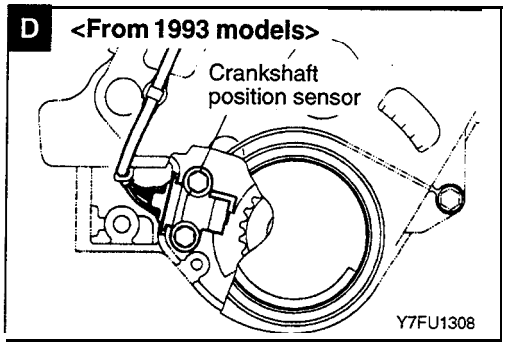

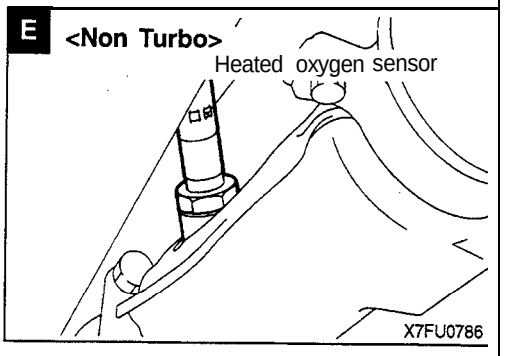

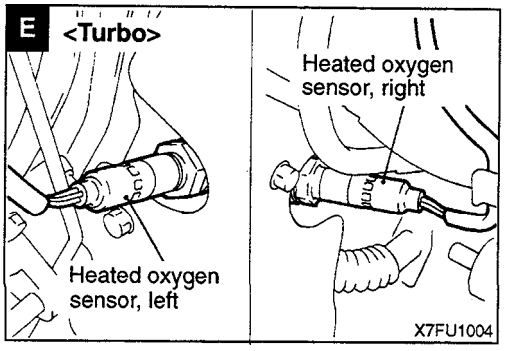

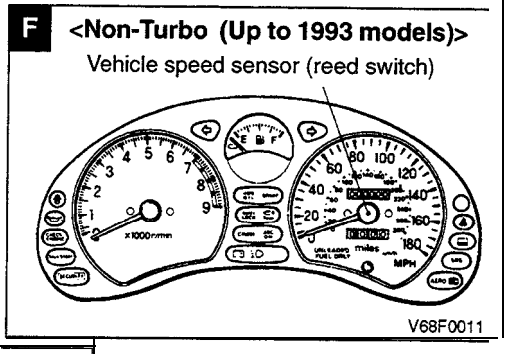

TSB Revision

F

<Turbo>, <Non–Turbo
(From 1994 models)>

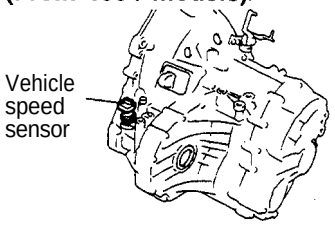

W12F0050

G

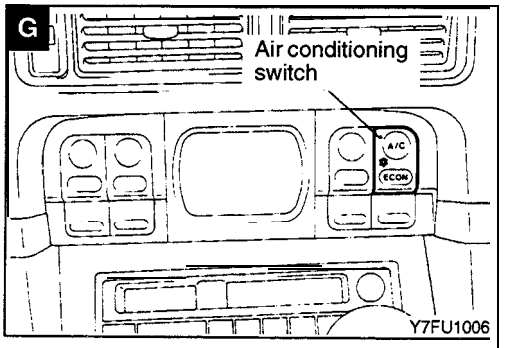

Y7FU1006

H

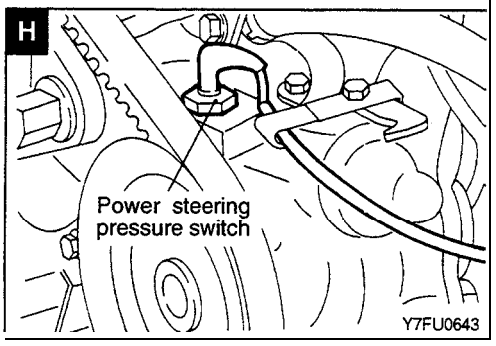

Y7FU0643

I

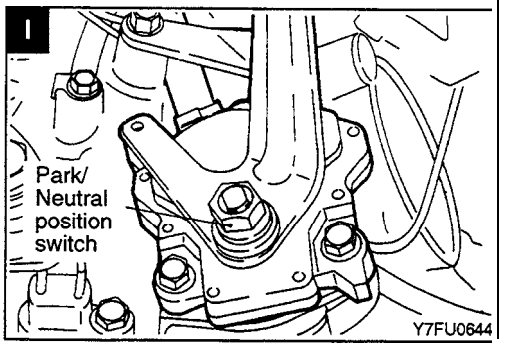

Y7FU0644

J <Non Turbo>

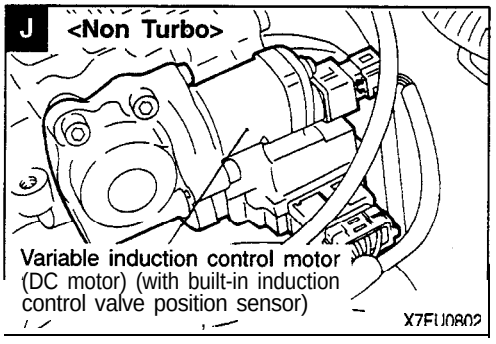

X7FU0802

K

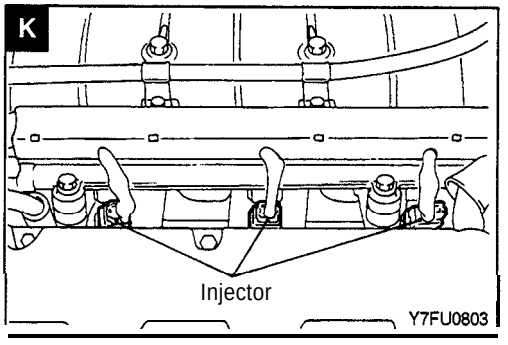

Y7FU0803

L

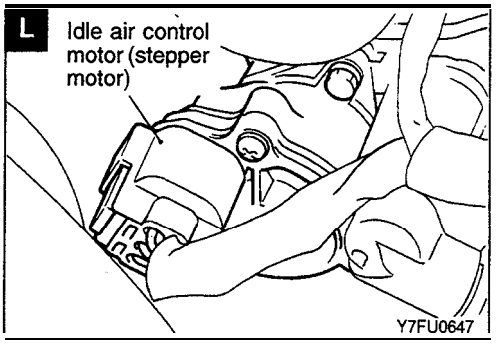

Y7FU0647

M

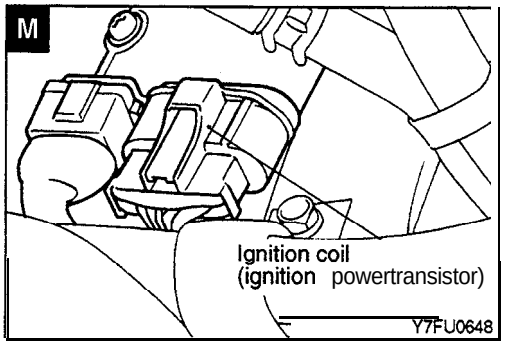

Y7FU0648

N

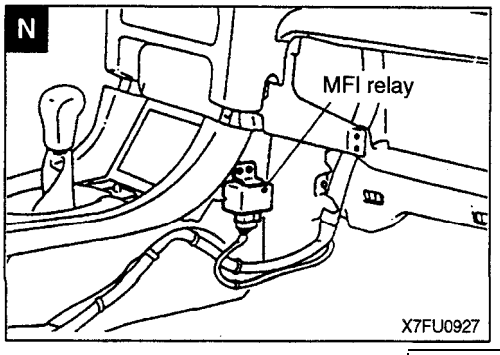

X7FU0927

O

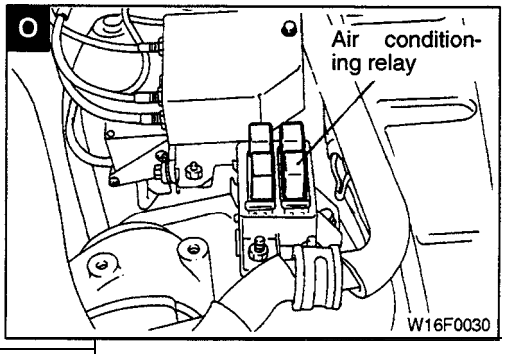

W16F0030

P

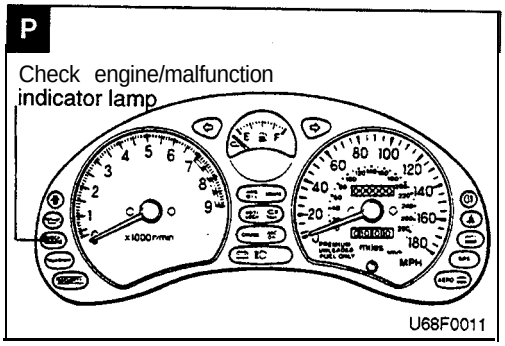

Q

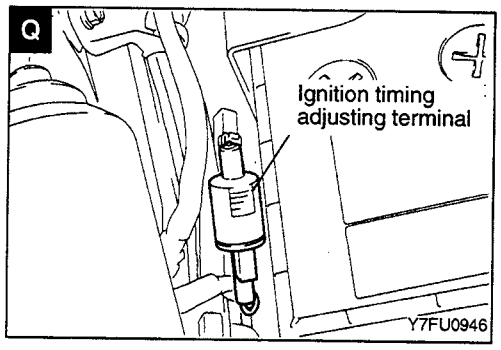

R <Up to 1993 models>

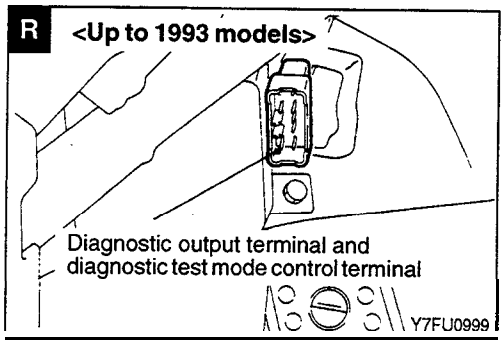

R <From 1994 models>

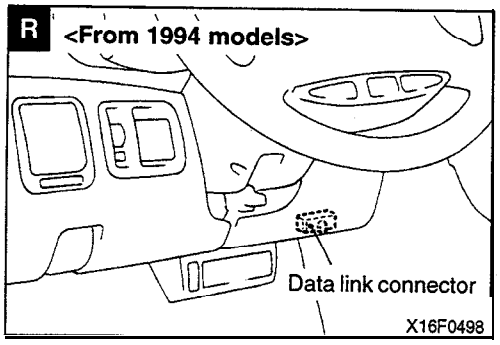

S

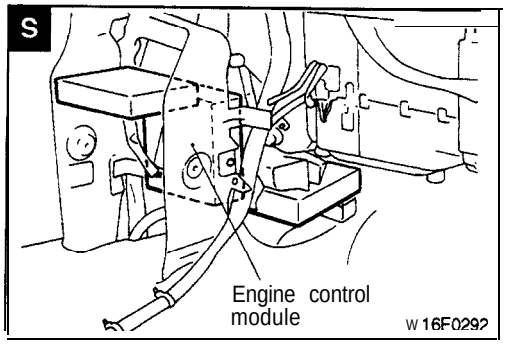

T

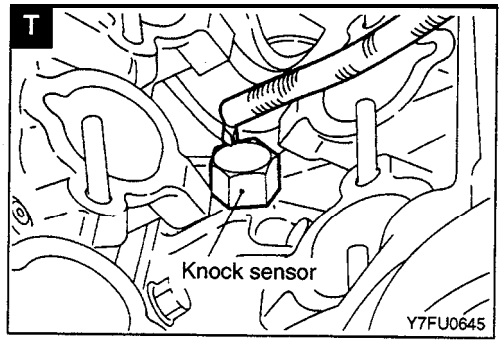

U <Turbo>

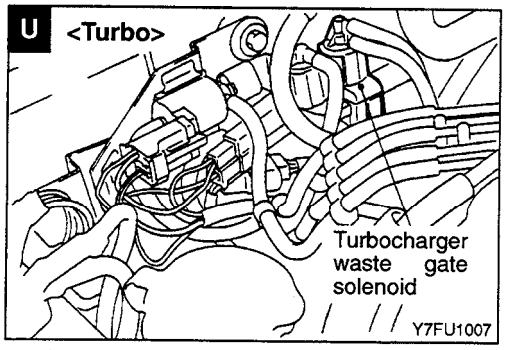

V <Turbo>

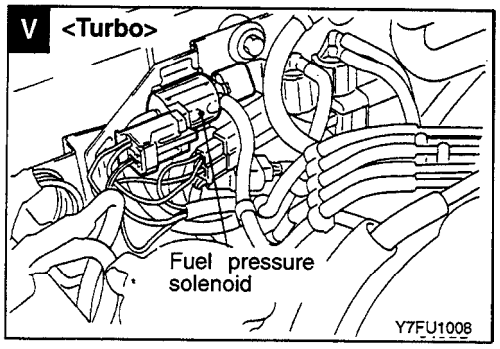

W <Turbo>

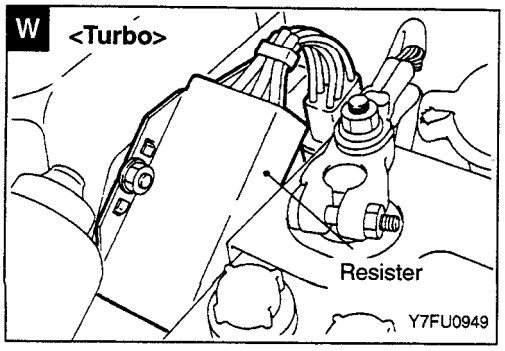

X

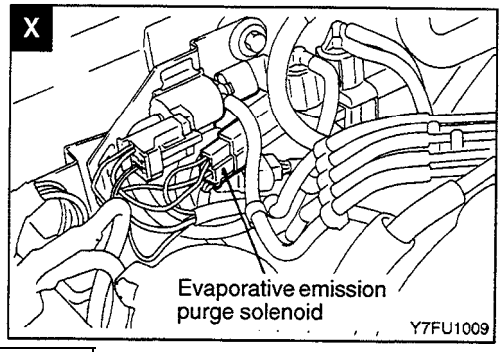

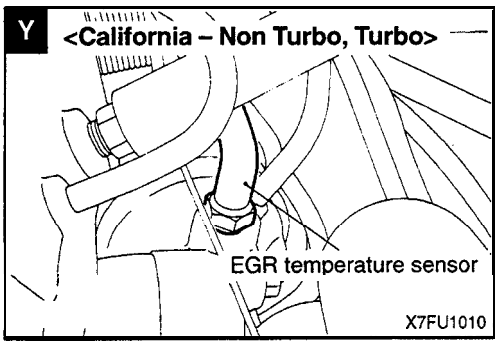
Y
<California – Non Turbo, Turbo>
EGR temperature sensor
X7FU1010

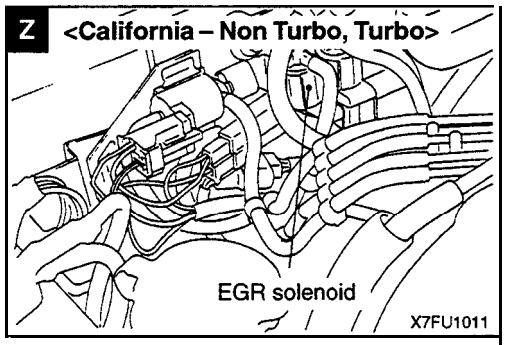
Z
<California – Non Turbo, Turbo>
EGR solenoid
X7FU1011

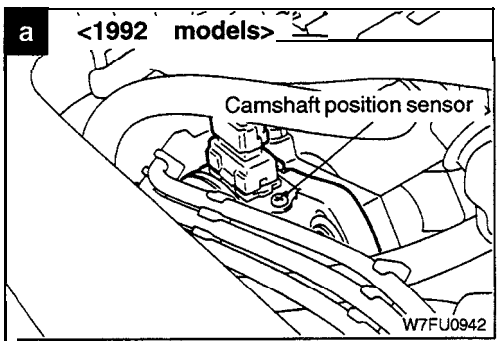
a
<1992 models>
Camshaft position sensor
W7FU0942

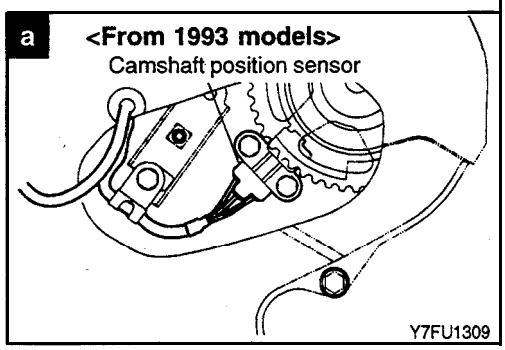
a
<From 1993 models>
Camshaft position sensor
Y7FU1309

1994, 1995 models except Non Turbo (Federal) and from 1996 models

Name	Symbol	Name	Symbol
Air conditioning relay	O	Ignition timing adjusting terminal	Q
Air conditioning switch	G	Injector	K
Camshaft position sensor	a	Knock sensor	T
Check engine/malfunction indicator lamp	P	Left bank heated oxygen sensor	E
Crankshaft position sensor	D	Manifold differential pressure sensor (From 1996 models)	Y
Data link connector	R	Multiport fuel injection (MFI) relay	N
EGR solenoid <Up to 1995 models for California – Non Turbo, Turbo, 1996 models>	Z	Park/Neutral position switch <A/T>	I
EGR temperature sensor <Up to 1995 models for California, Up to 1995 models for Federal -Turbo>	Y	Power steering pressure switch	H
		Resistor <Turbo>	W
Engine control module	S	Right bank heated oxygen sensor	E
Engine coolant temperature seonsor	B	Throttle position sensor (with built-in closed throttle position switch)	C
Evaporative emission purge solenoid	X	Turbocharger waste gate solenoid <Turbo>	U
Fuel pressure solenoid <Turbo>	V	Variable induction control motor (DC motor) (with built-in induction control valve position sensor) <Non Turbo>	J
Heated oxygen sensor	E		
Idle air control motor (stepper motor)	L	Vehicle speed sensor	F
Ignition coil (ignition power transistor)	M	Volume air flow sensor (with built-in intake air temperature sensor and barometric pressure sensor)	A

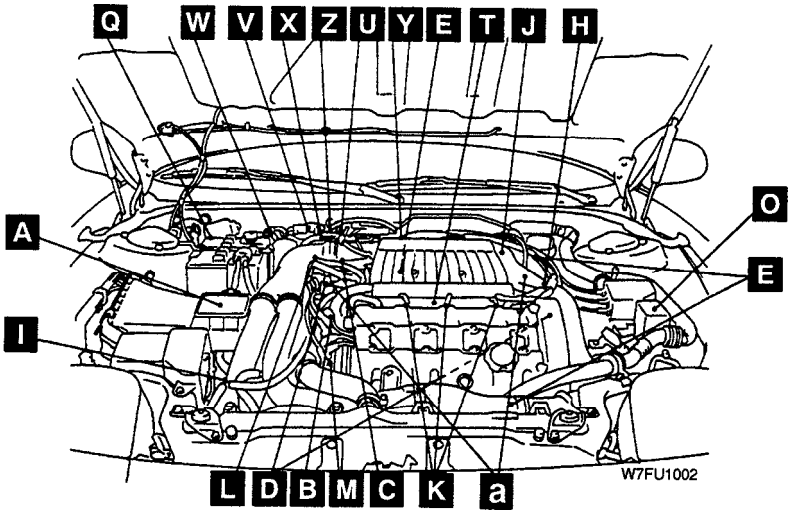

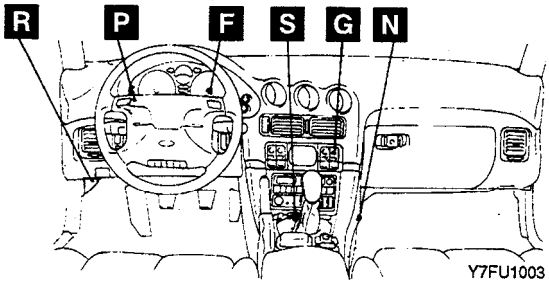

TSB Revision

A

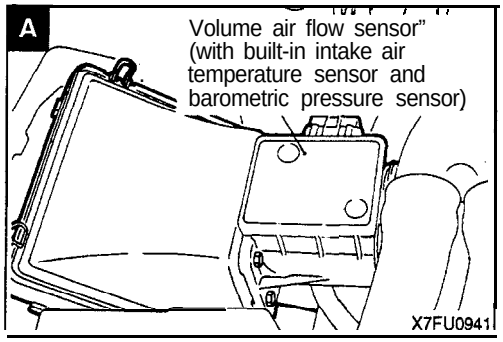

B

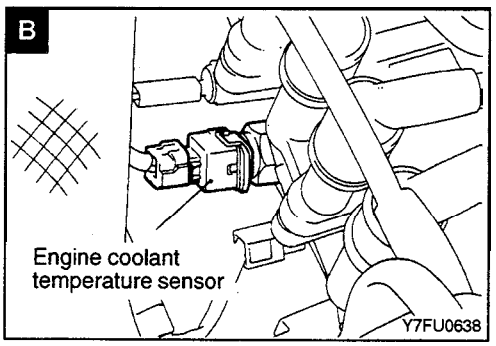

C

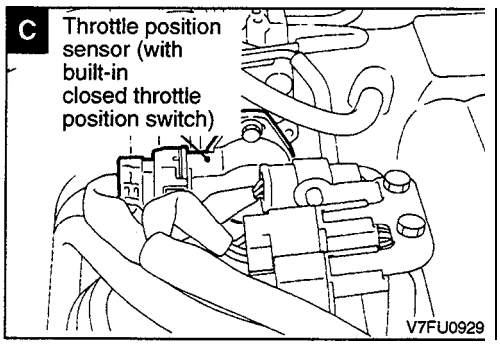

D

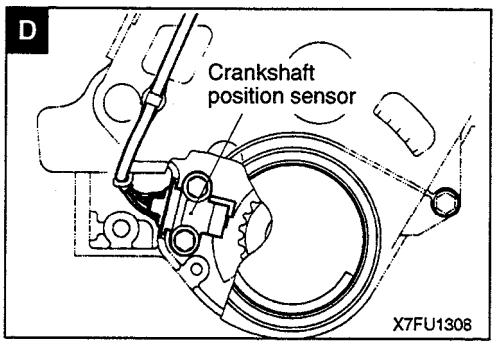

E <California – Non Turbo and From 1996 models>

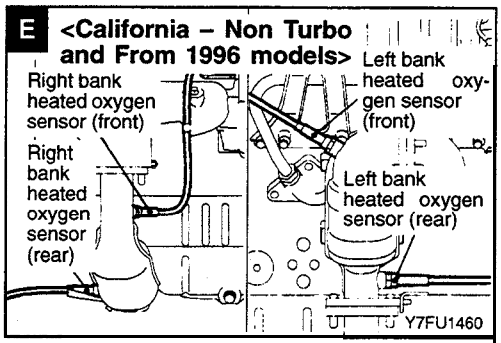

E <Up to 1995 models for Federal – Turbo>

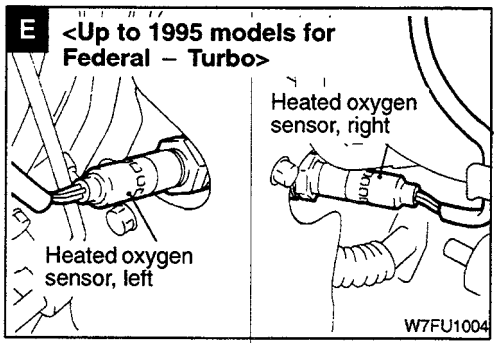

E <California–Turbo and From 1996 models>

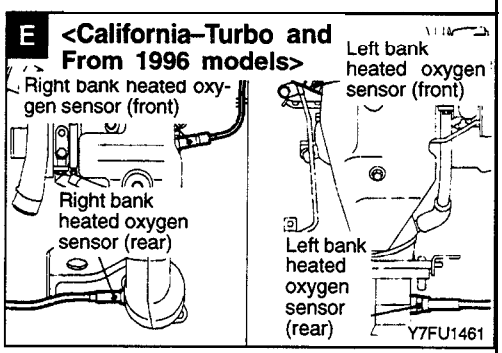

F <Non–Turbo (Up to 1993 models)>

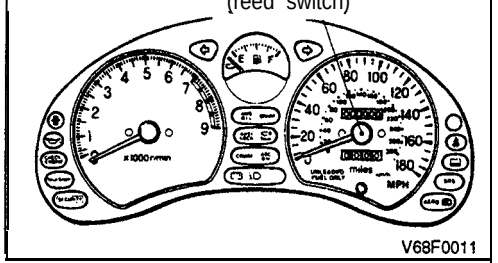

F <Turbo>, <Non–Turbo (From 1994 models)>

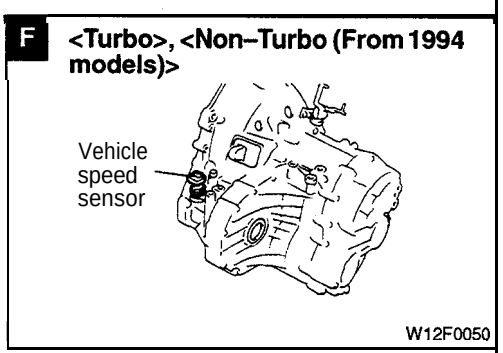

G

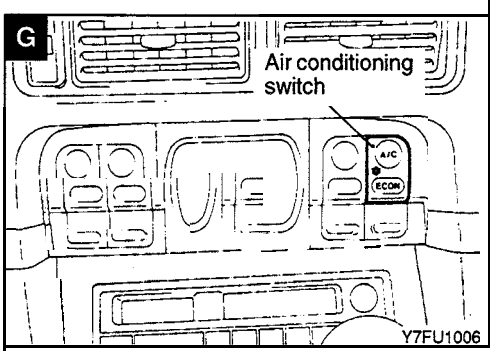

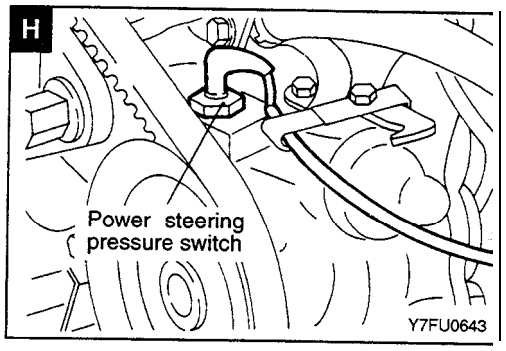

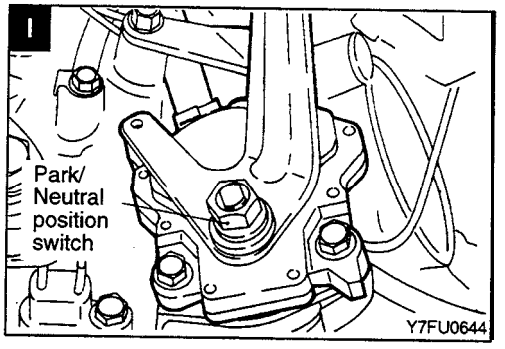

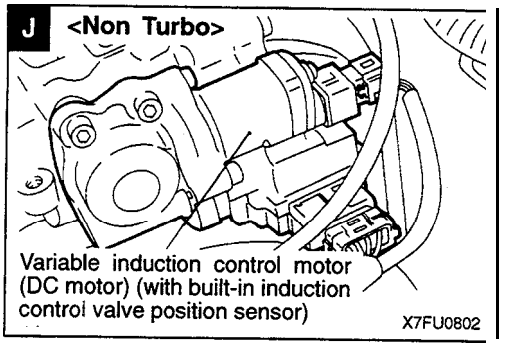

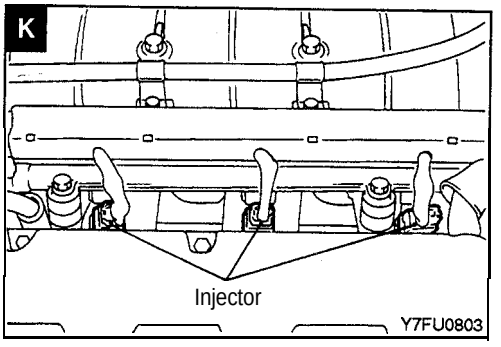

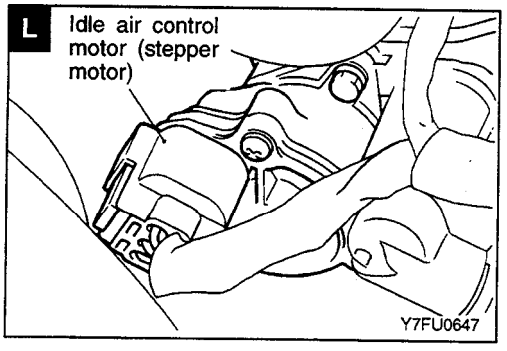

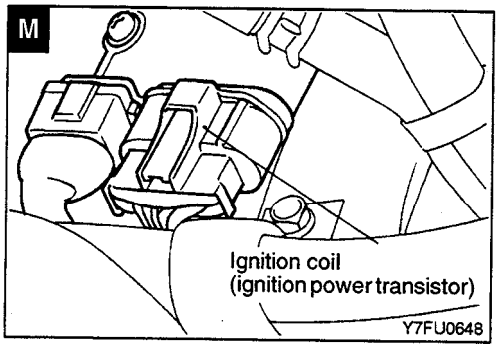

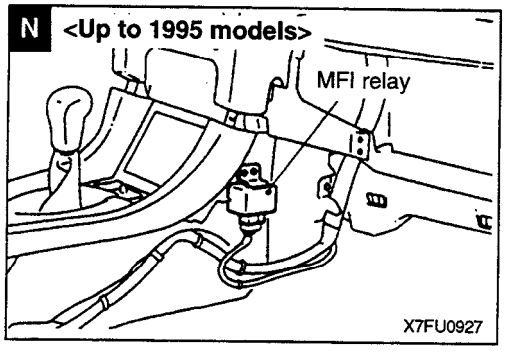

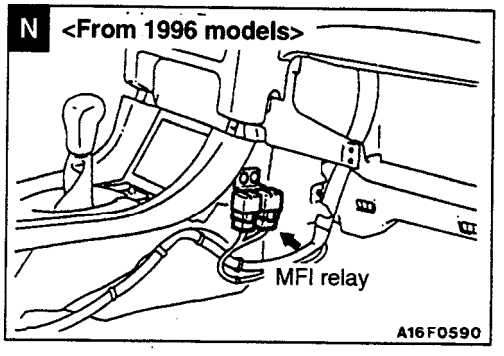

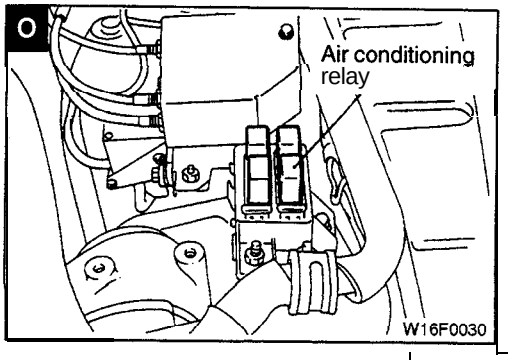

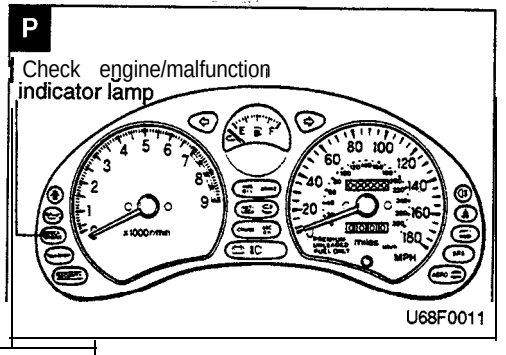

TSB Revision

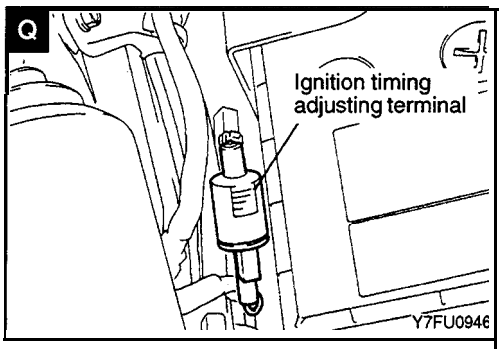
Q
Ignition timing adjusting terminal
Y7FU0946

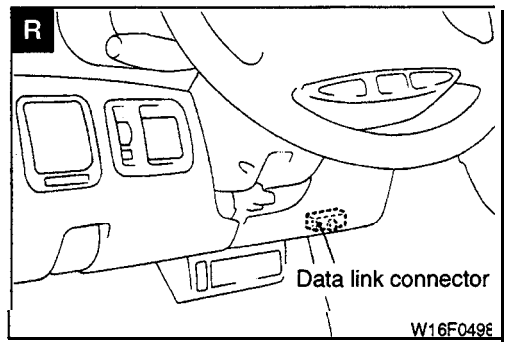
R
Data link connector
W16F0498

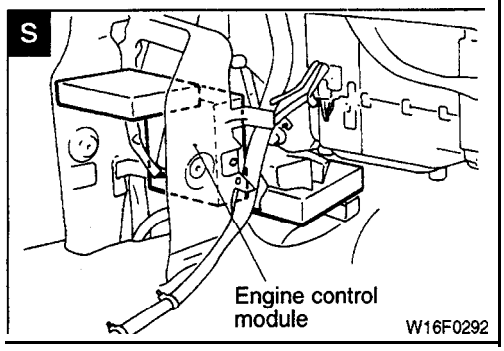
S
Engine control module
W16F0292

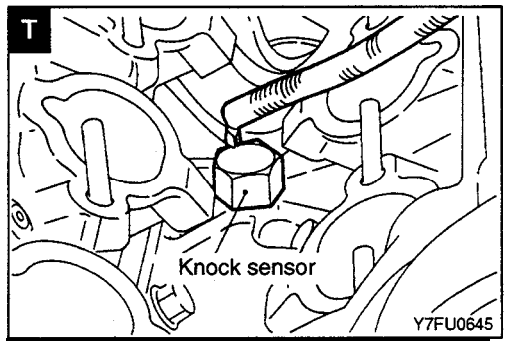
T
Knock sensor
Y7FU0645

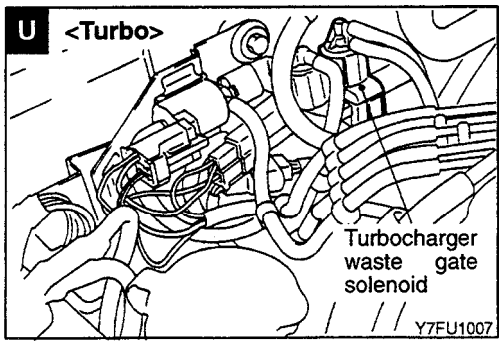
U
<Turbo>
Turbocharger waste gate solenoid
Y7FU1007

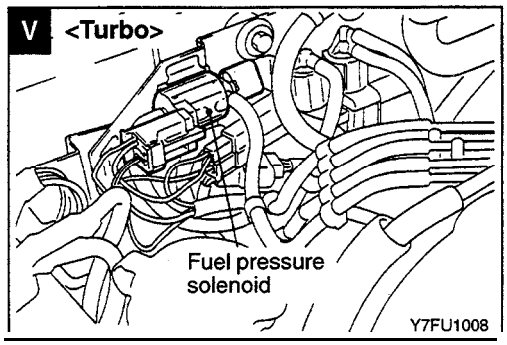
V
<Turbo>
Fuel pressure solenoid
Y7FU1008

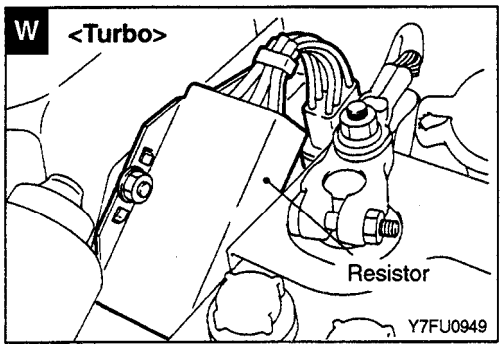
W
<Turbo>
Resistor
Y7FU0949

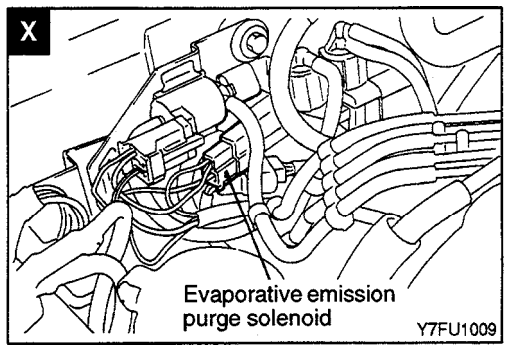
X
Evaporative emission purge solenoid
Y7FU1009

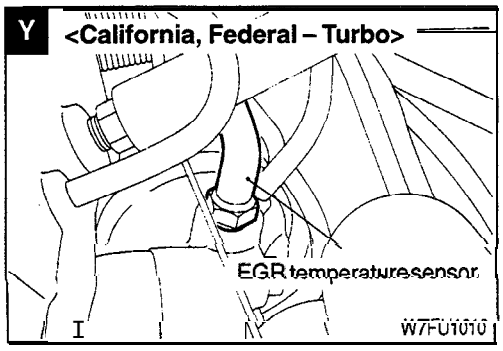
Y
<California, Federal – Turbo>
EGR temperature sensor
W7FU1010

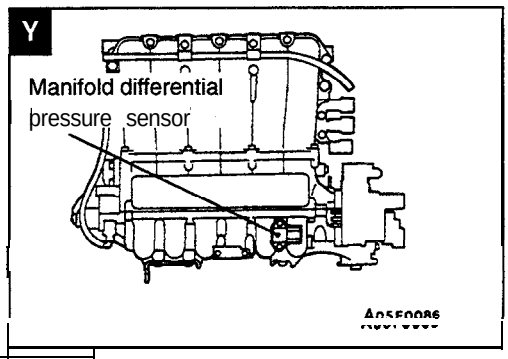
Y
Manifold differential pressure sensor

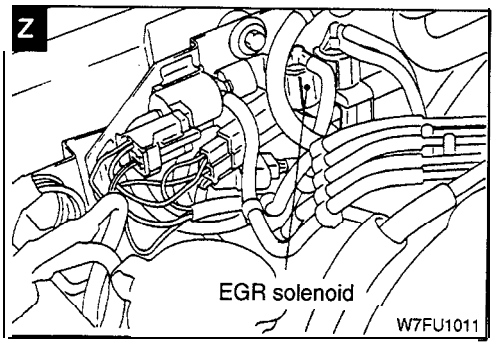
z
EGR solenoid
W7FU1011

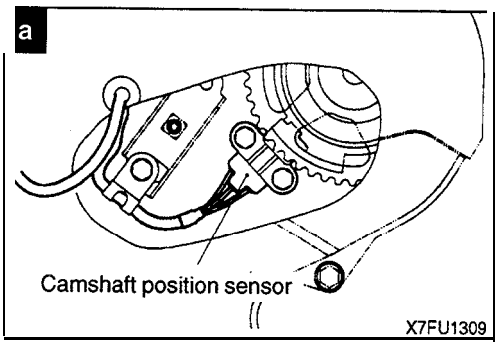
a
Camshaft position sensor
X7FU1309

NOTES

COOLING

COMPONENT LOCATION

Name	Symbol	Name	Symbol
Air conditioning compressor lock controller	E	Radiator fan motor control relay (up to 1993 models)	B
Air conditioning control unit	D	Radiator fan motor relay (HI)	A
Condenser fan motor relay (Hi)	B	Radiator fan motor relay (LO)	A
Condenser fan motor relay (LO)	B	Thermo sensor	C

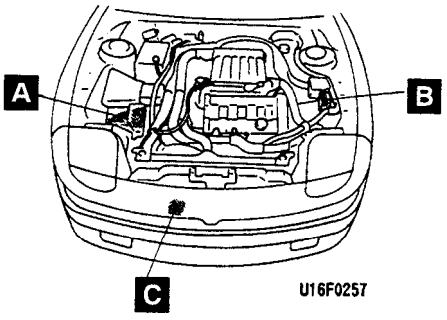

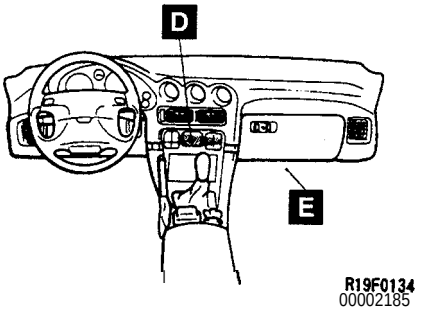

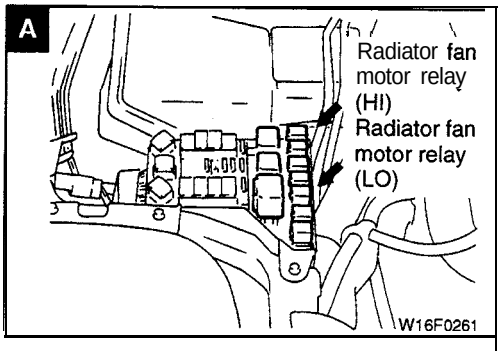

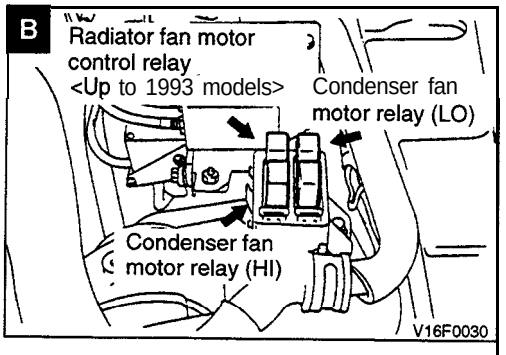

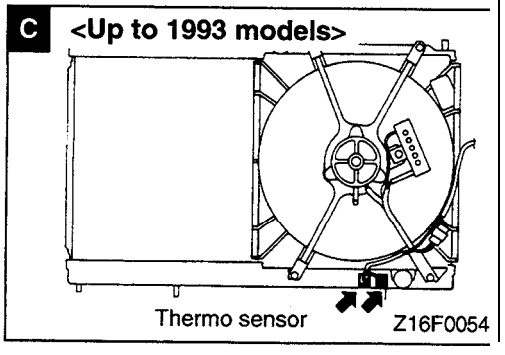

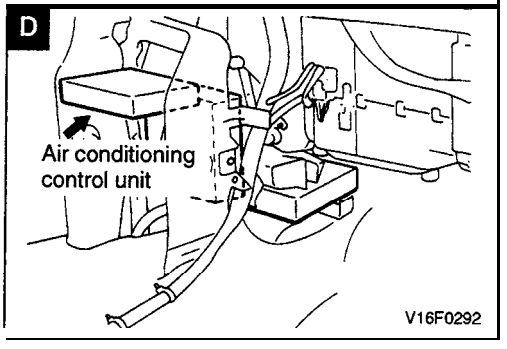

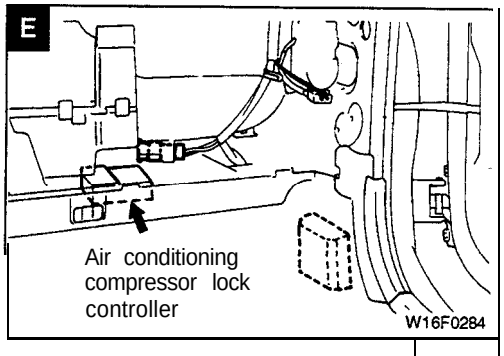

COOLING CIRCUIT (UP TO 1993 MODELS)

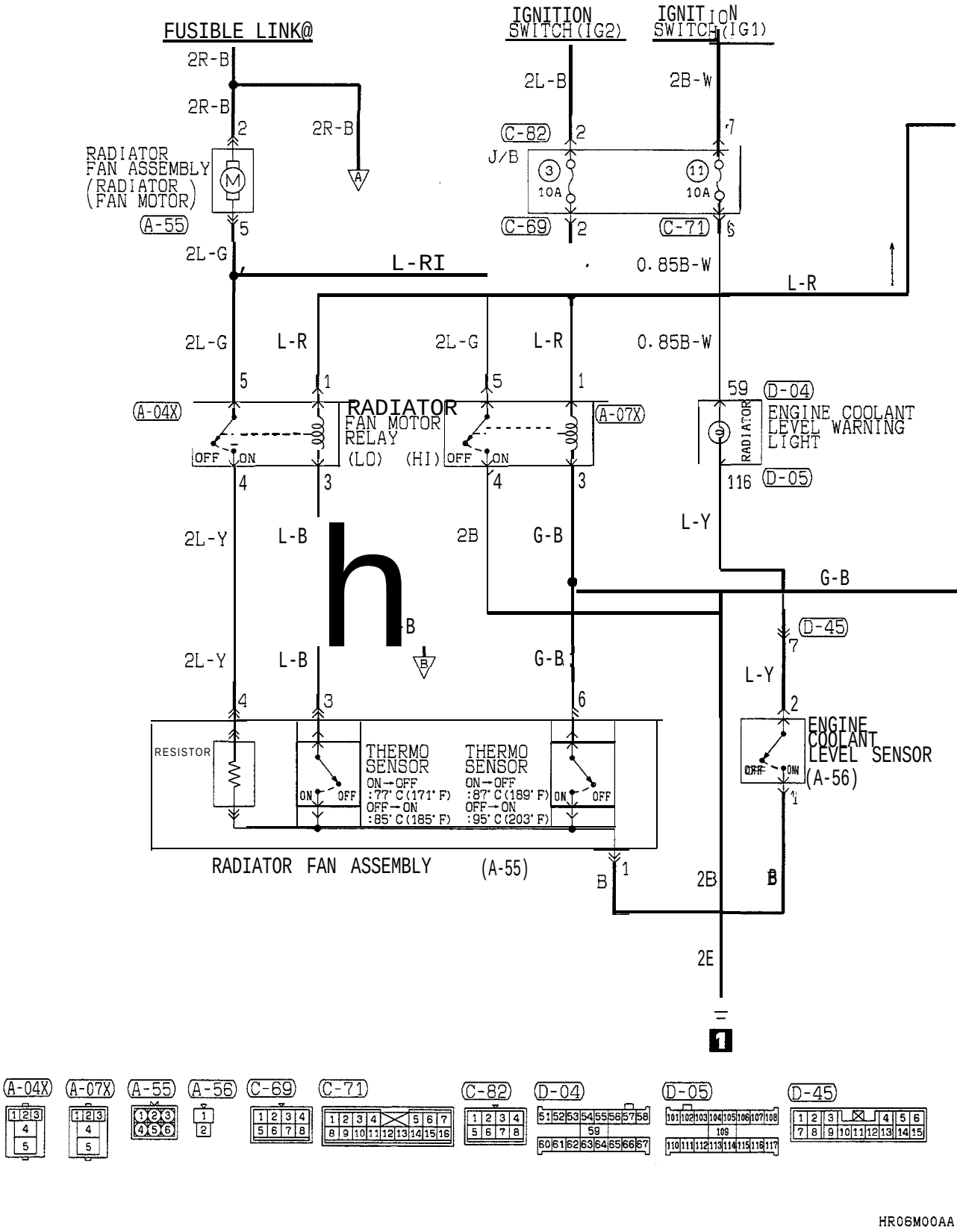

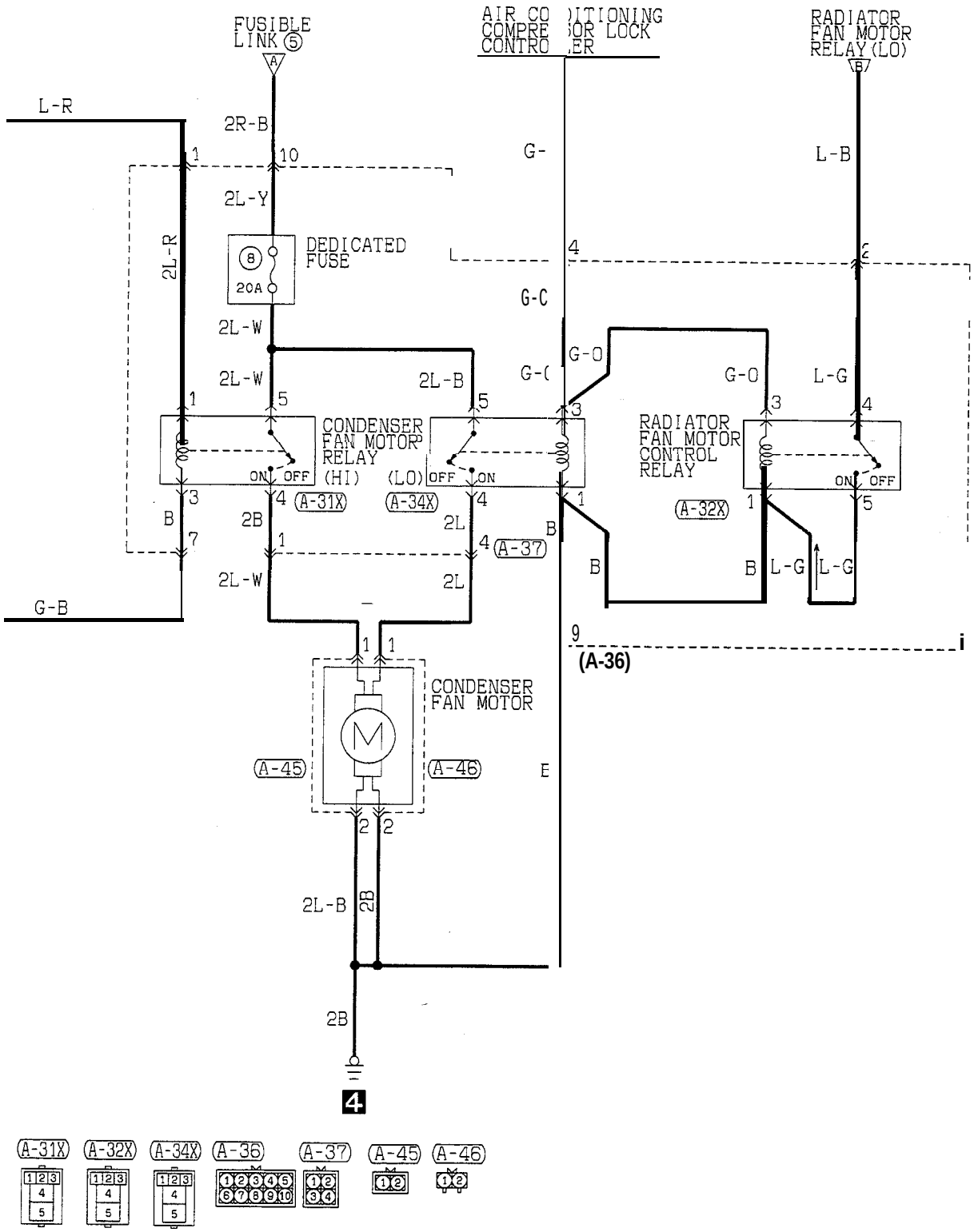
FUSIBLE LINK 5
AIR CONDITIONING COMPRESSOR LOCK CONTROL
RADIATOR FAN MOTOR RELAY (LO)
L-R
2R-B
2L-Y
2L-R
DEDICATED FUSE
20A
2L-W
2L-B
G-
G-C
G-O
L-B
L-G
CONDENSER FAN MOTOR RELAY
(HI)
(LO)
ON
OFF
RADIATOR FAN MOTOR CONTROL RELAY
(A-31X)
(A-34X)
(A-32X)
(A-37)
(A-36)
B
2B
2L
G-B
CONDENSER FAN MOTOR
(A-45)
(A-46)
E
4

(A-31X)
(A-32X)
(A-34X)
(A-36)
(A-37)
(A-45)
(A-46)

HR06M00AB

COOLING CIRCUIT (1994, 1995 MODELS)

<NON TURBO> (FEDERAL)

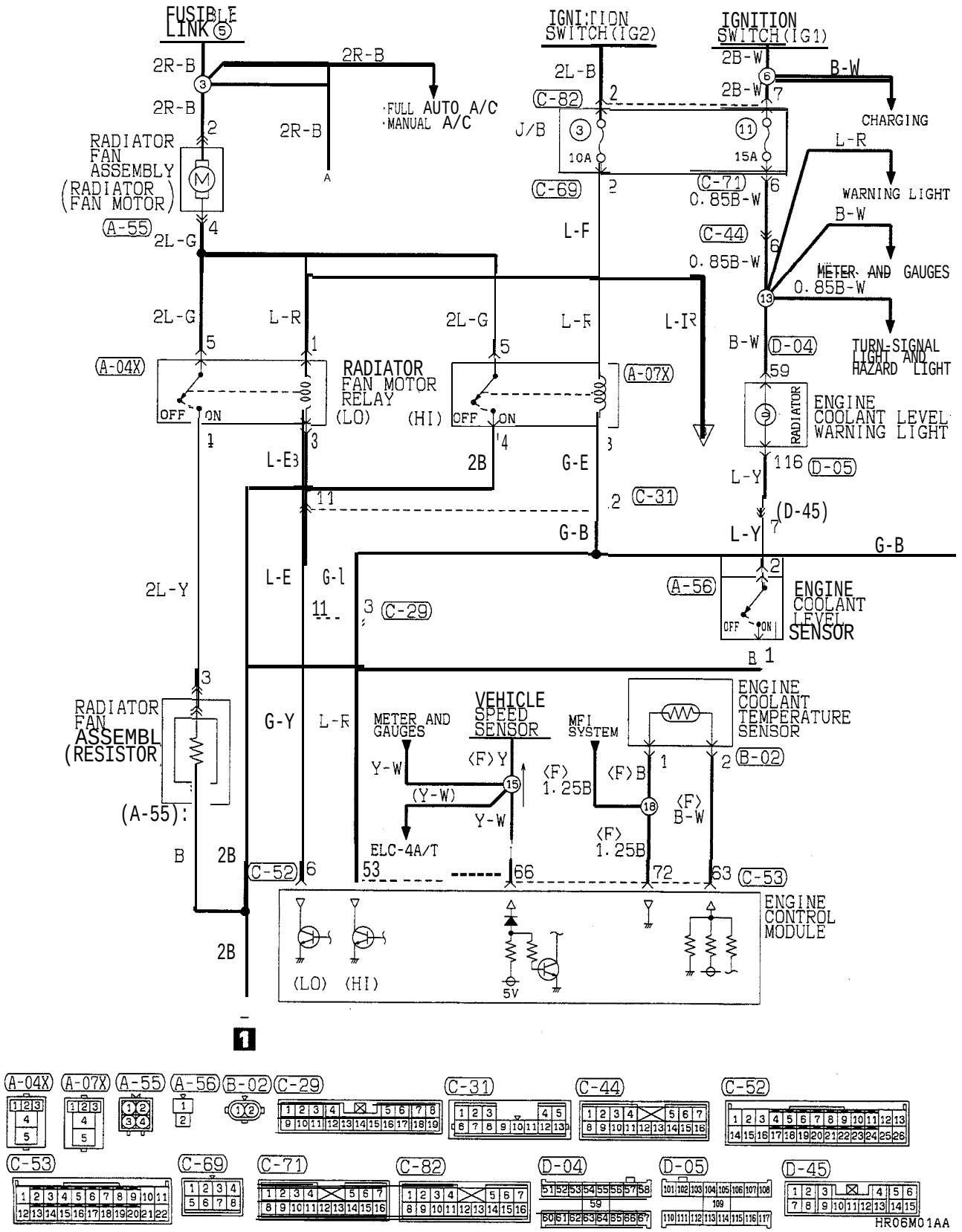

TSB Revision

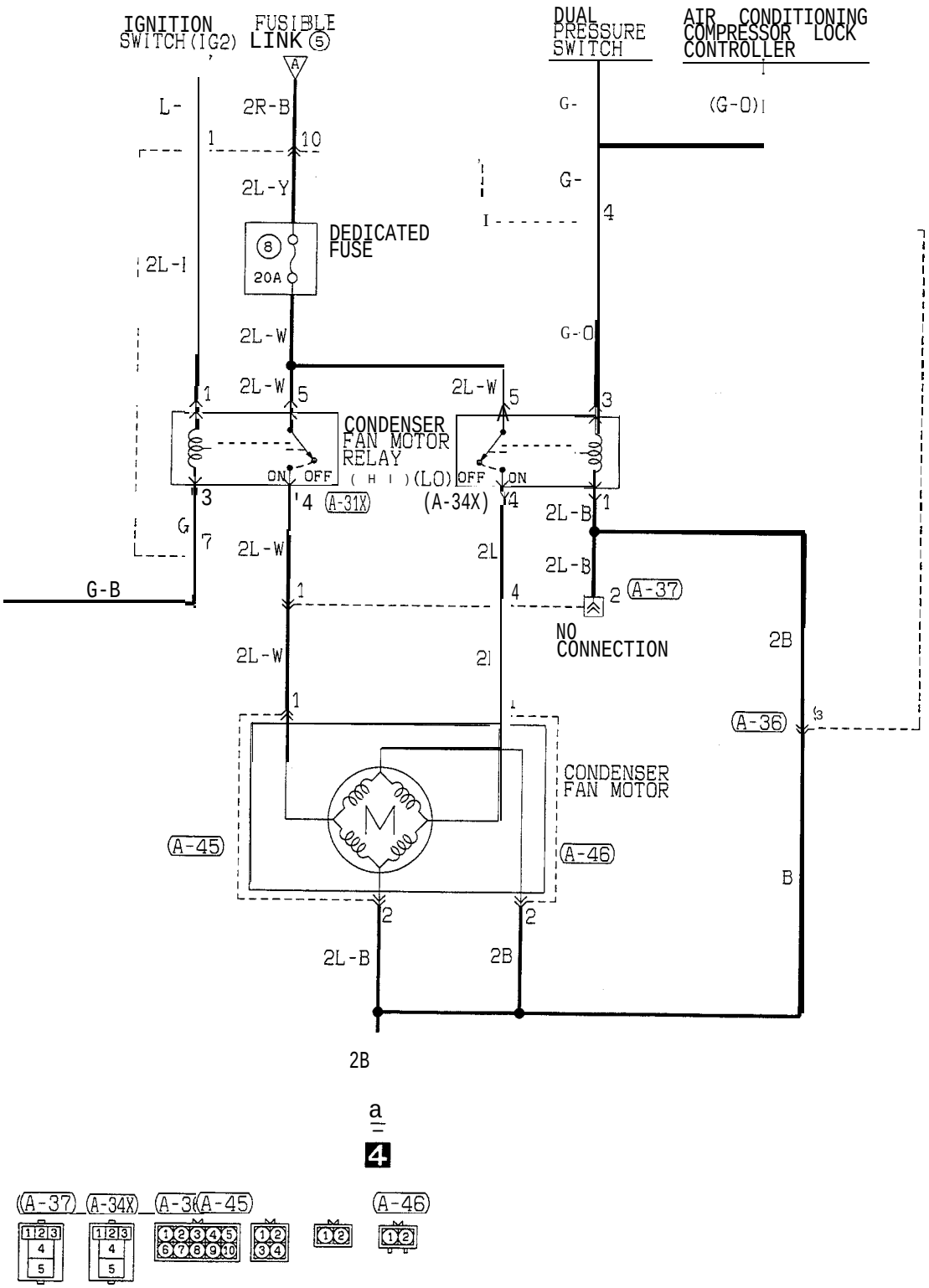
IGNITION SWITCH (IG2)
FUSIBLE LINK ⑤
DUAL PRESSURE SWITCH
AIR CONDITIONING COMPRESSOR LOCK CONTROLLER
L-
2R-B
G-
(G-O)
2L-Y
DEDICATED FUSE
20A
2L-I
2L-W
G-O
CONDENSER FAN MOTOR RELAY
ON OFF
(HI)
(LO)
(A-31X)
(A-34X)
2L-B
G
G-B
2L
NO CONNECTION
2B
(A-37)
(A-36)
CONDENSER FAN MOTOR
(A-45)
(A-46)
B
2B
a
4
(A-37)
(A-34X)
(A-36)
(A-45)
(A-46)

HR06M01AB

COOLING CIRCUIT (1994, 1995 MODELS)

<TURBO, NON TURBO (CALIFORNIA)>

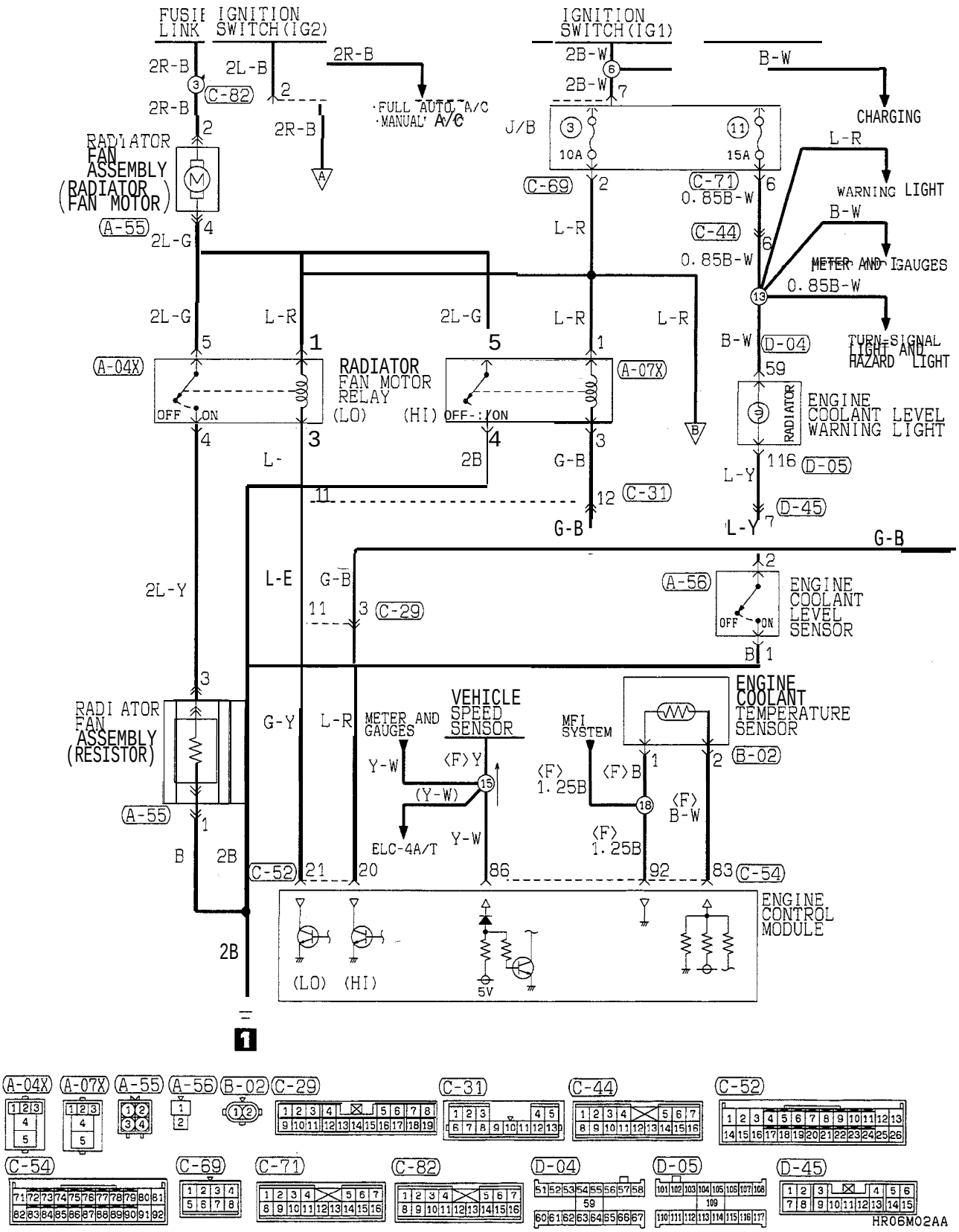

TSB Revision

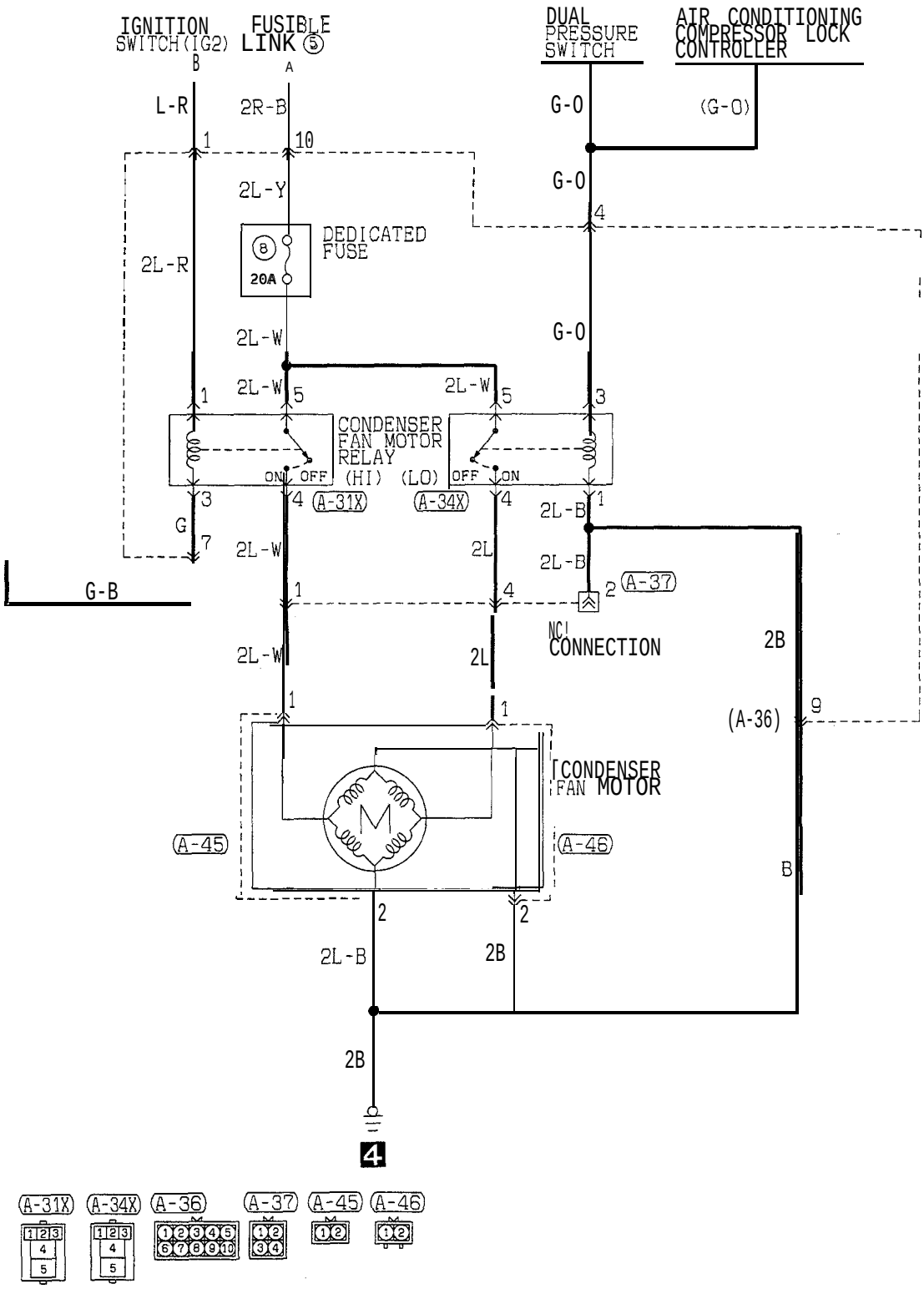
IGNITION SWITCH(IG2)
FUSIBLE LINK ⑤
DUAL PRESSURE SWITCH
AIR CONDITIONING COMPRESSOR LOCK CONTROLLER
L-R
2R-B
G-O
(G-O)
2L-Y
DEDICATED FUSE
⑧
20A
2L-R
2L-W
CONDENSER FAN MOTOR RELAY
ON OFF (HI)
(LO) OFF ON
(A-31X)
(A-34X)
2L-B
G
G-B
2L
(A-37)
NC CONNECTION
2B
(A-36)
CONDENSER FAN MOTOR
(A-45)
(A-46)
B
4

(A-31X)
(A-34X)
(A-36)
(A-37)
(A-45)
(A-46)

HR06M02AB

COOLING CIRCUIT (FROM 1996 MODELS)

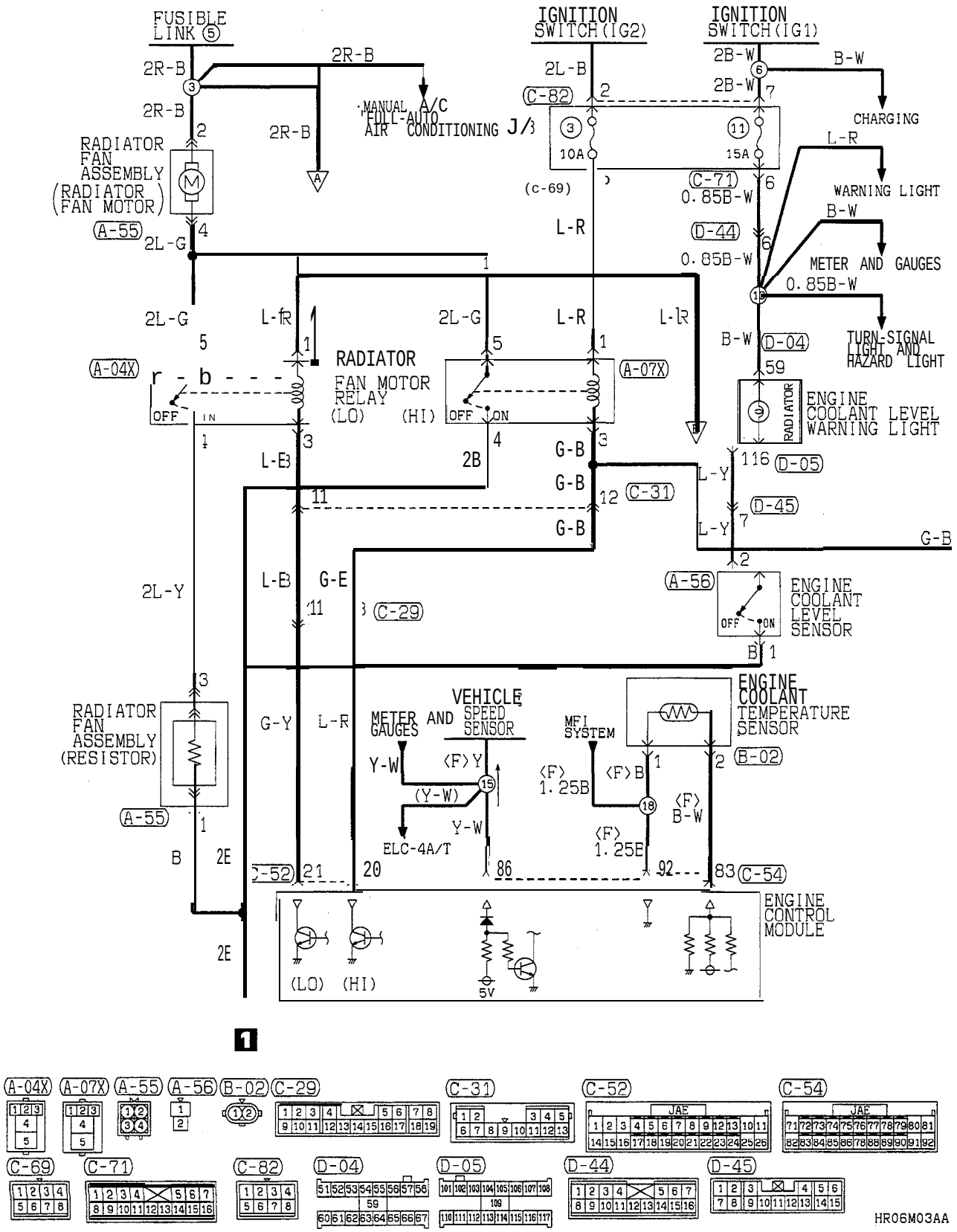

TSB Revision

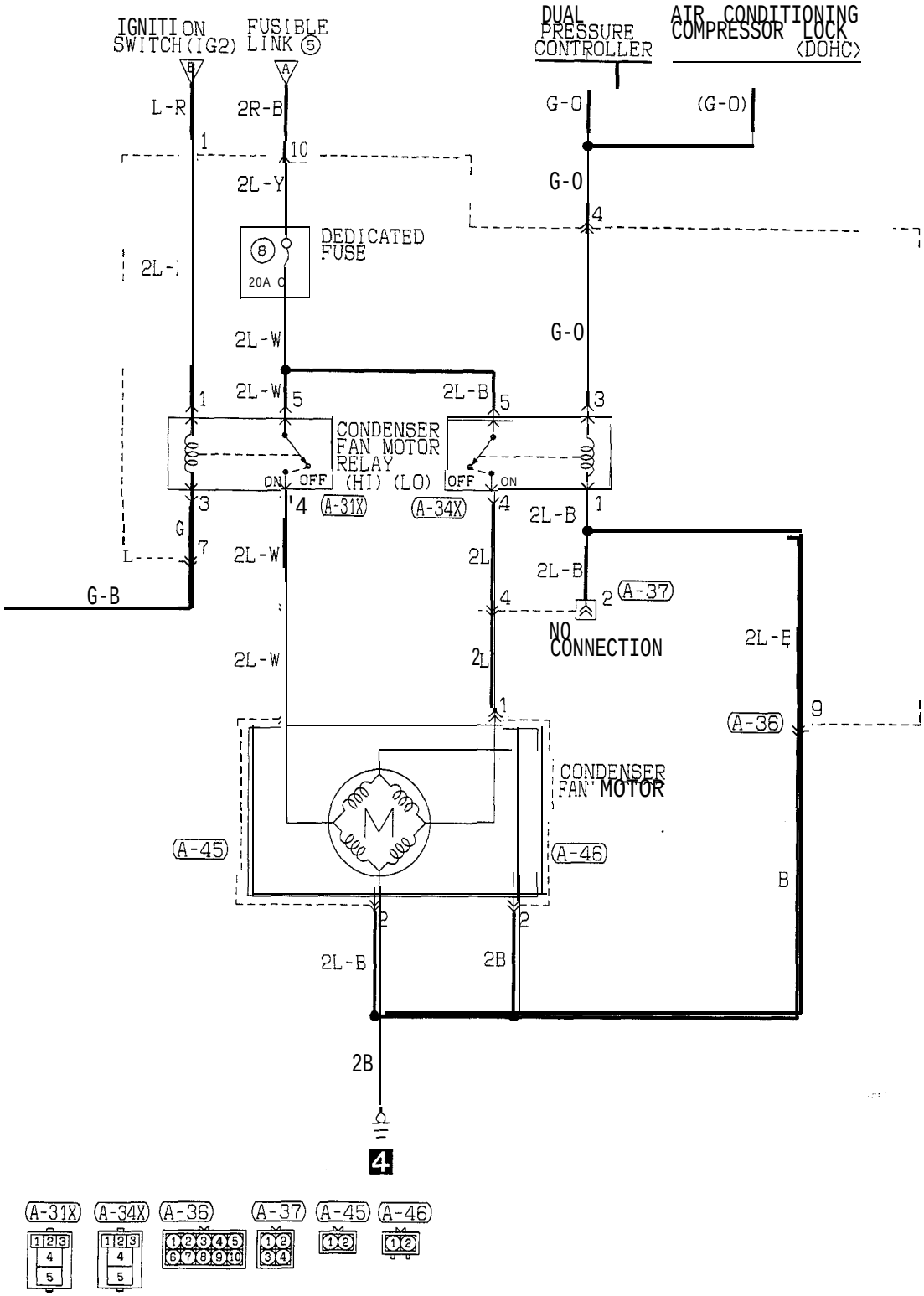
IGNITION SWITCH (IG2)
FUSIBLE LINK ⑤
DUAL PRESSURE CONTROLLER
AIR CONDITIONING COMPRESSOR LOCK (DOHC)
L-R
2R-B
G-O
(G-O)
2L-Y
DEDICATED FUSE
20A
2L-W
2L-B
CONDENSER FAN MOTOR RELAY
(HI) (LO)
ON
OFF
A-31X
A-34X
A-37
NO CONNECTION
2L
G-B
A-36
CONDENSER FAN MOTOR
A-45
A-46
B
2B
4

HR06M03AB

<Up to 1993 models>
TROUBLESHOOTING HINTS

1. Neither the radiator fan nor condenser fan rotate at all.

- Check fusible link No. 5

2. Only the condenser fan does not operate.

- Check dedicated fuse No. 8.

3. The radiator fan and condenser fan do not operate in the low speed mode, but operate otherwise.

(1) The A/C compressor magnet clutch does not enter the "ON" state.
- Check whether the output of the auto compressor control unit is available.

NOTE
For troubleshooting of the air conditioning control unit, refer to GROUP 55.

(2) The A/C compressor magnet clutch enters the "ON" state.
- Check the resistor.
- Check the radiator fan motor relay (LO) and condenser fan motor relay (LO).
- Check the thermo sensor (for radiator fan).

(3) The radiator fan does not rotate when the air conditioning switch is turned ON.
- Check the radiator fan motor control relay.

4. The radiator fan and condenser fan do not operate in the high speed mode, but **operate otherwise.**

- Check the thermo sensor (for condenser fan).
- Check the radiator fan motor relay (HI) and condenser fan motor relay (HI).

Fan Operating Mode

Air conditioning switch	Thermo sensor for radiator fan ON at 85 ± 4°C (185 ± 7°F) or more OFF at 77°C (171°F) or less	Thermo sensor for condenser fan ON at 95 ± 4°C (203 ± 7°F) or more OFF at 87°C (189°F) or less	A/C engine coolant temperature switch (for air conditioning cut-off) OFF at 115 ± 3°C (239 ± 5°F) or over, ON at 108°C (226°F) or less	Radiator fan motor	Condenser fan motor Condenser fan motor operates in HIGH only when it receives input from condenser fan motor relay (HI) and (LO).
OFF	OFF	OFF	–	OFF	OFF
	ON	OFF		LOW	OFF
		ON		HIGH	LOW
ON	OFF	OFF	ON	LOW	LOW
	ON	OFF		LOW	LOW
		ON		HIGH	HIGH
			OFF	HIGH	LOW

<From 1994 models>
OPERATION

The engine control module controls the power transistors (high speed and low speed) in the module to provide radiator fan motor and condenser fan motor rotation controls in accordance with the engine coolant temperature and vehicle speed.

1. Radiator Fan (Low Speed Rotation)

- When the engine control module turns on the power transistor (low speed) in the module, the current flows from the ignition switch to the engine control module through the radiator fan motor relay (LO) coil.
  If the current flows to the fan motor relay coil, the switch of the relay turns on to supply the motor driving power (for low speed rotation). This will cause the current to flow from the battery to the ground through the radiator fan motor, relay switch and resistor, rotating the radiator fan at low speeds.

2. Condenser Fan (Low Speed Rotation)

- The power from the A/C compressor lock controller turns on the condenser fan motor relay (LO) to rotate the condenser fan at low speeds.

3. Radiator Fan, Condenser Fan (High Speed Rotation)

- When the engine control module turns on the power transistor (high speed) in the module. the radiator fan motor relay (HI) and condenser fan motor relay (HI) will operate and the motor driving power (for high speed rotation) is sent to the radiator fan motor and condenser fan motor to rotate the radiator fan and condenser fan at high speeds.

NOTE
In the event of faulty water temperature sensor, the engine control module commands the fan motors (for both radiator and condenser) to rotate at high speeds.

TROUBLESHOOTING HINTS

1. Neither the radiator fan nor condenser fan rotate at all.

- Check fusible link No. 5.

2. Only the condenser fan does not operate.

- Check dedicated fuse No. 8.

3. The condenser fan do not operate in the low speed mode, but operate otherwise.

(1) The A/C compressor magnet clutch does not enter the "ON" state.
- Check whether the output of the air conditioning compressor lock controller unit is available.

(2) The A/C compressor magnet clutch enters the "ON" state.
- Check the condenser fan motor relay (LO).

4. The radiator fan and condenser fan do not operate in the high speed mode, but operate otherwise.

- Check the engine control unit.

Fan Operating Mode

A/C compressor lock controller output	Vehicle speed km/h [mph]	Engine coolant temperature °C [°F]	Transistor in engine control unit Low speed	Transistor in engine control unit High speed	Radiator fan	Condenser fan
LO (0V)	80 or less [50 or less]	Approx. 95 [203] or less	OFF	OFF	OFF	OFF
		Approx. 95 [203] or more	ON	OFF	Low speed	OFF
		Approx. 105 [221] or more	ON	ON	High speed	High speed
	80 or more [50 or more]	Approx. 105 [221] or less	OFF	OFF	OFF	OFF
		Approx. 105 [221] or more	ON	ON	High speed	High speed
HI (12V)	–	Approx. 105 [221] or less	ON	OFF	Low speed	Low speed
		Approx. 105 [221] or more	ON	ON	High speed	High speed

ELC-4 A/T CIRCUIT (1992 MODEL)

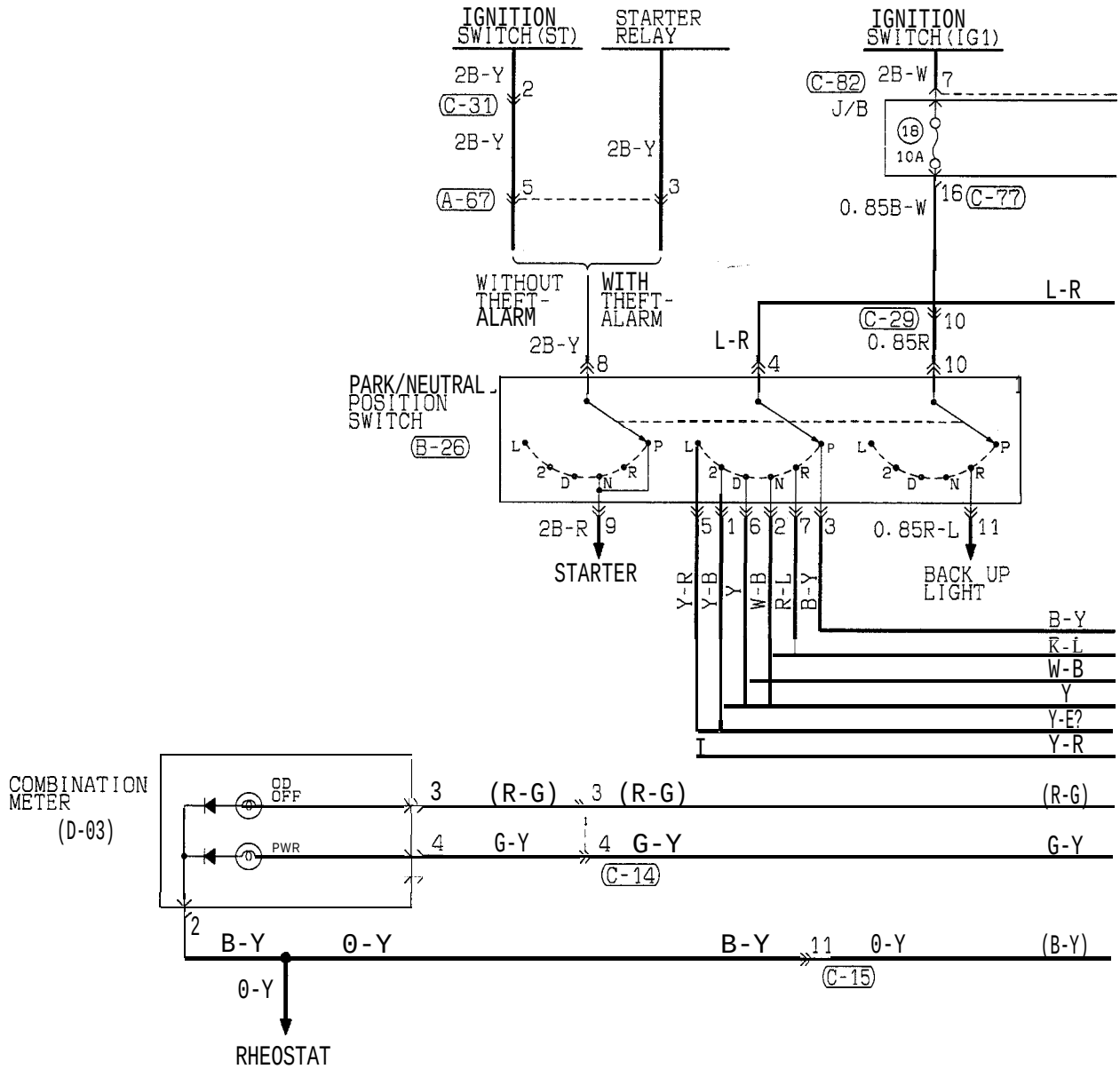

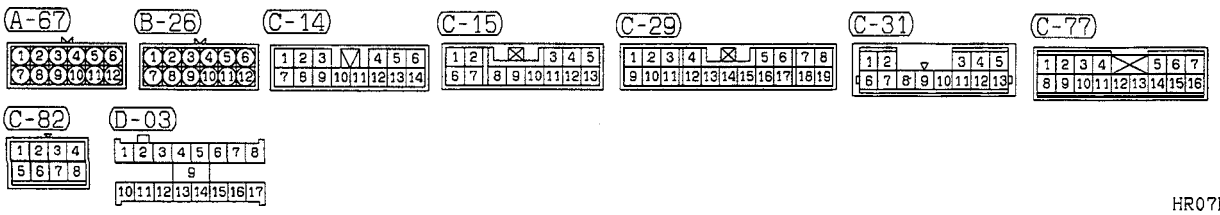

HR07M00AA

TSB Revision

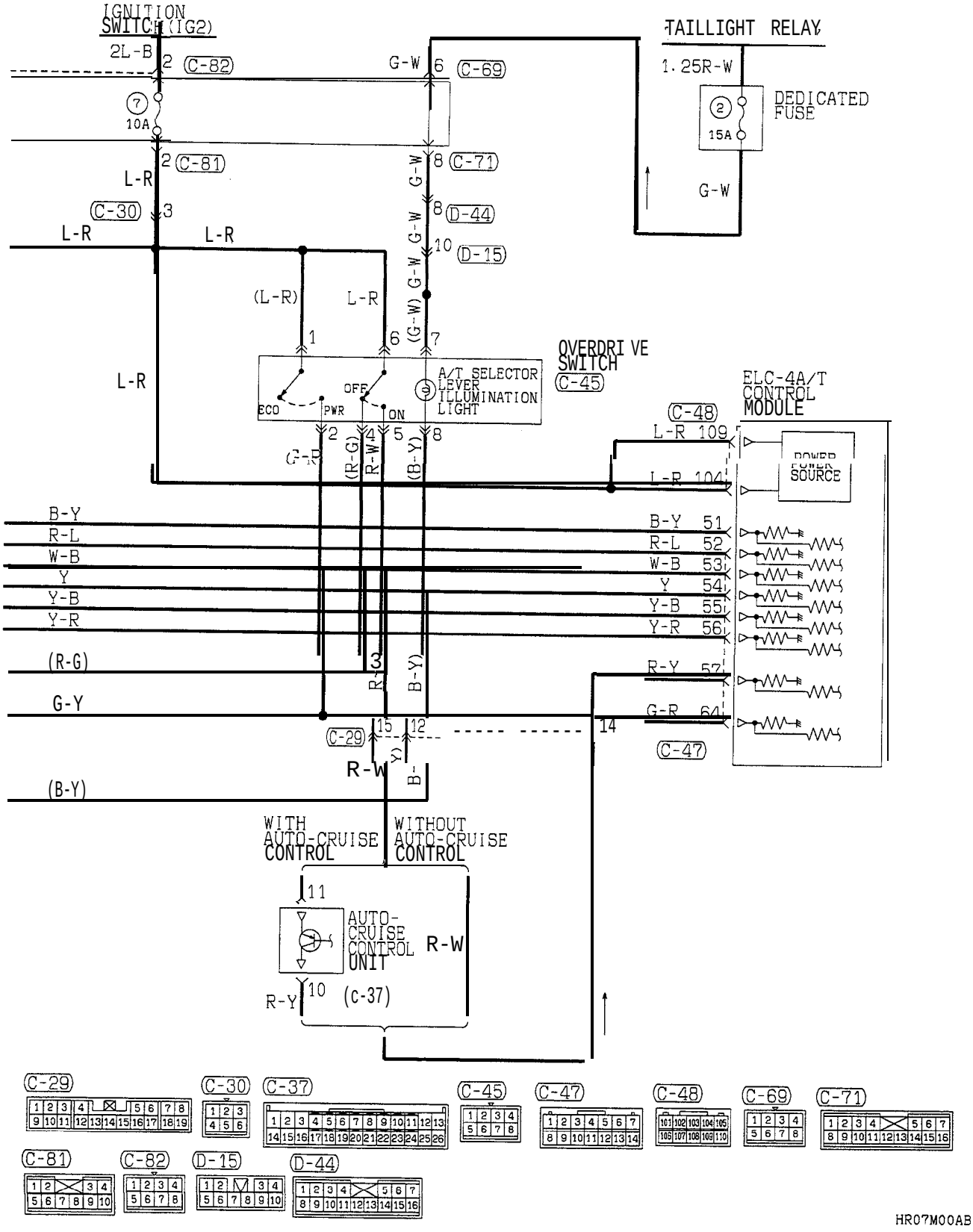
IGNITION SWITCH (IG2)
2L-B
2 (C-82)
G-W 6 (C-69)
7
10A
2 (C-81)
L-R
(C-30) 3
L-R
L-R
G-W 8 (C-71)
G-W
8 (D-44)
G-W
10 (D-15)
G-W
(G-W)
7
(L-R)
L-R
1
6
TAILLIGHT RELAY
1.25R-W
2
15A
DEDICATED FUSE
G-W
OVERDRIVE SWITCH
(C-45)
A/T SELECTOR LEVER ILLUMINATION LIGHT
ECO
PWR
OFF
ON
ELC-4A/T CONTROL MODULE
(C-48)
L-R 109
L-R 104
POWER SOURCE
B-Y
R-L
W-B
Y
Y-B
Y-R
(R-G)
G-Y
(B-Y)
B-Y 51
R-L 52
W-B 53
Y 54
Y-B 55
Y-R 56
R-Y 57
G-R 64
(C-29)
15
12
14
(C-47)
R-W
WITH AUTO-CRUISE CONTROL
WITHOUT AUTO-CRUISE CONTROL
11
AUTO-CRUISE CONTROL UNIT
R-W
R-Y
10
(c-37)
(C-29)
(C-30)
(C-37)
(C-45)
(C-47)
(C-48)
(C-69)
(C-71)
(C-81)
(C-82)
(D-15)
(D-44)
HR07M00AB

ELC-4 A/T CIRCUIT (1992 MODEL) (CONTINUED)

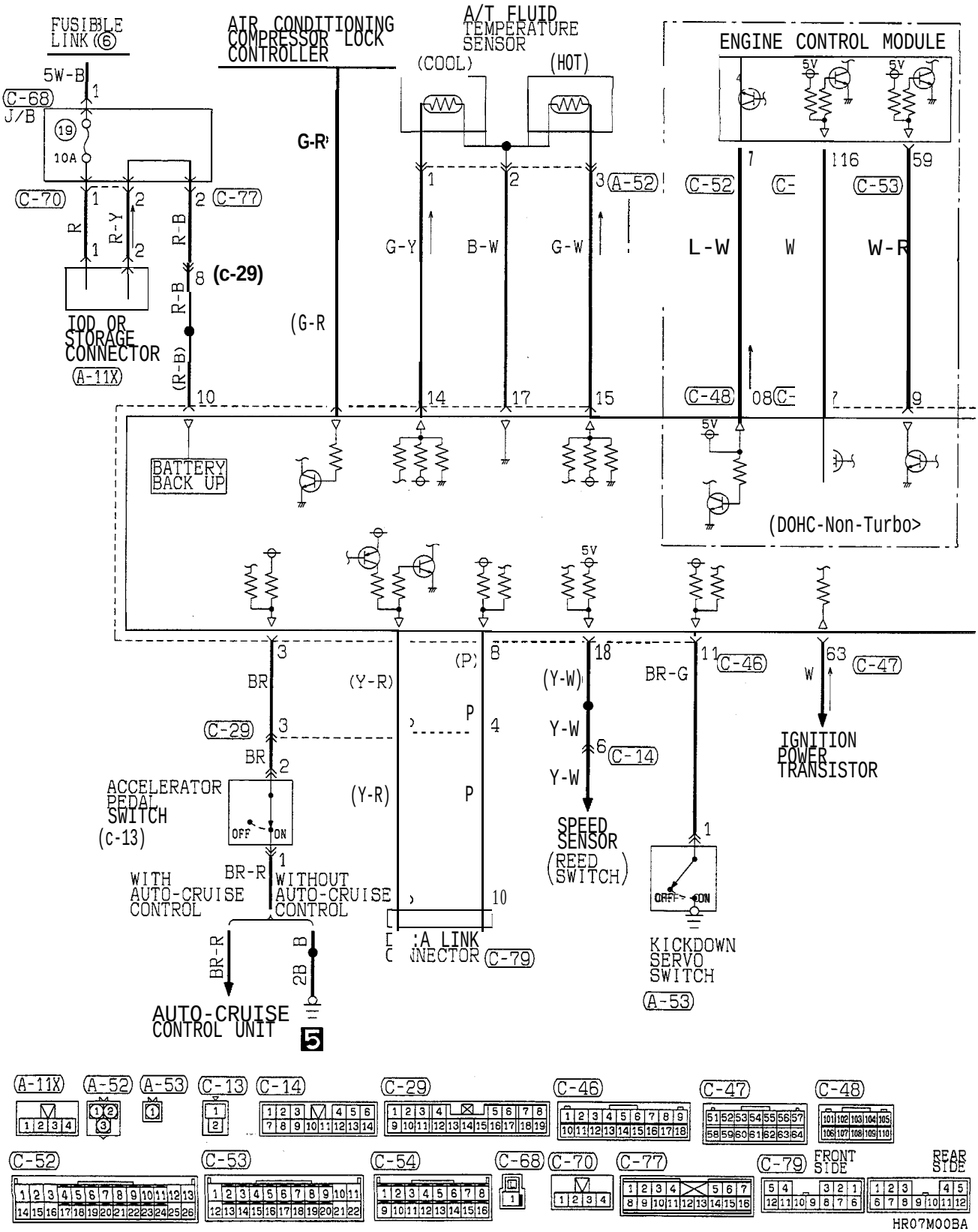

TSB Revision

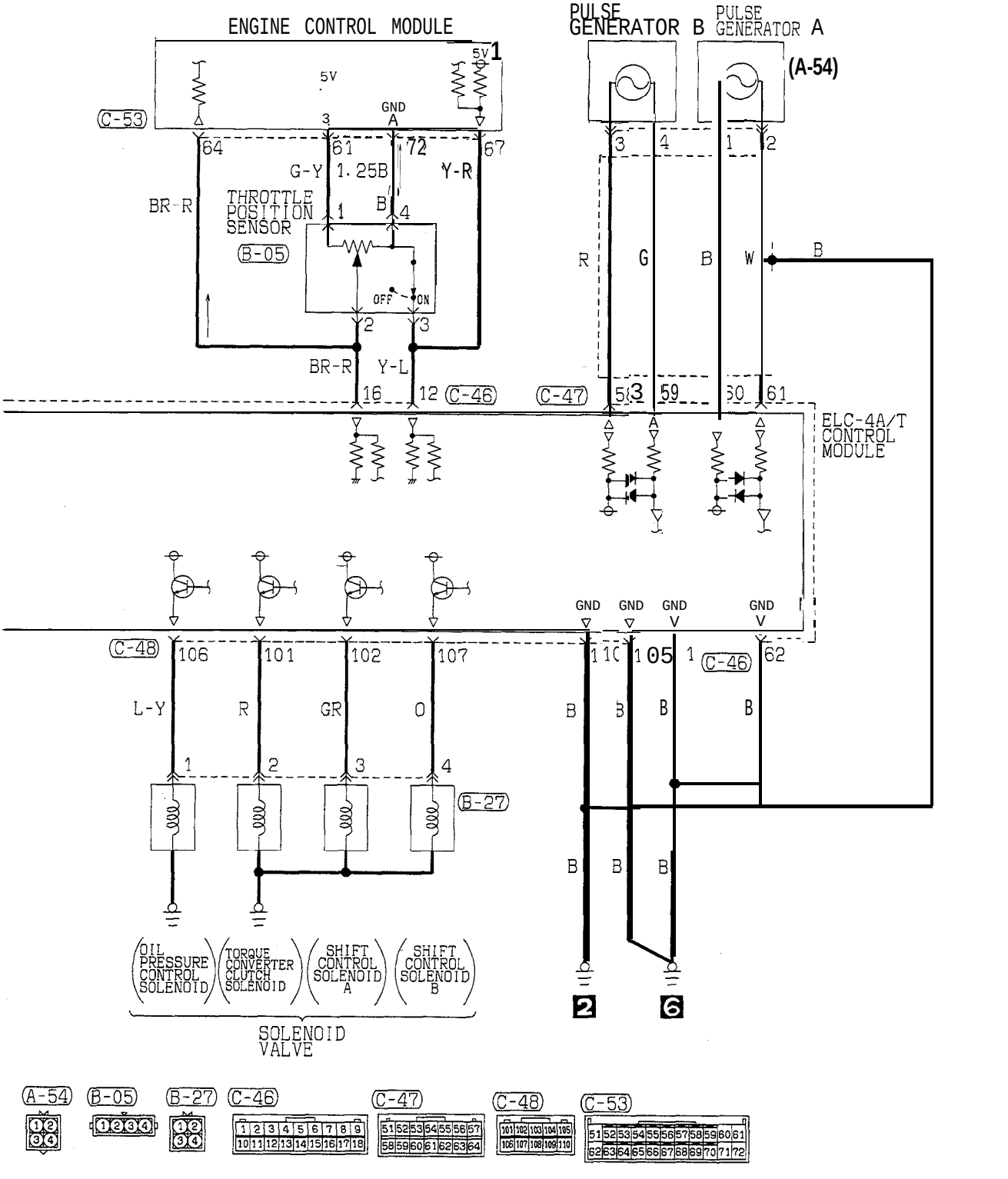
ENGINE CONTROL MODULE
PULSE GENERATOR B
PULSE GENERATOR A
(A-54)
(C-53)
5V
GND
G-Y
1.25B
Y-R
BR-R
THROTTLE POSITION SENSOR
(B-05)
OFF
ON
BR-R
Y-L
(C-46)
(C-47)
ELC-4A/T CONTROL MODULE
GND
(C-48)
L-Y
R
GR
O
(B-27)
OIL PRESSURE CONTROL SOLENOID
TORQUE CONVERTER CLUTCH SOLENOID
SHIFT CONTROL SOLENOID A
SHIFT CONTROL SOLENOID B
SOLENOID VALVE
(A-54)
(B-05)
(B-27)
(C-46)
(C-47)
(C-48)
(C-53)

HR07M00BB

ELC-4 A/T CIRCUIT (1993 MODELS)

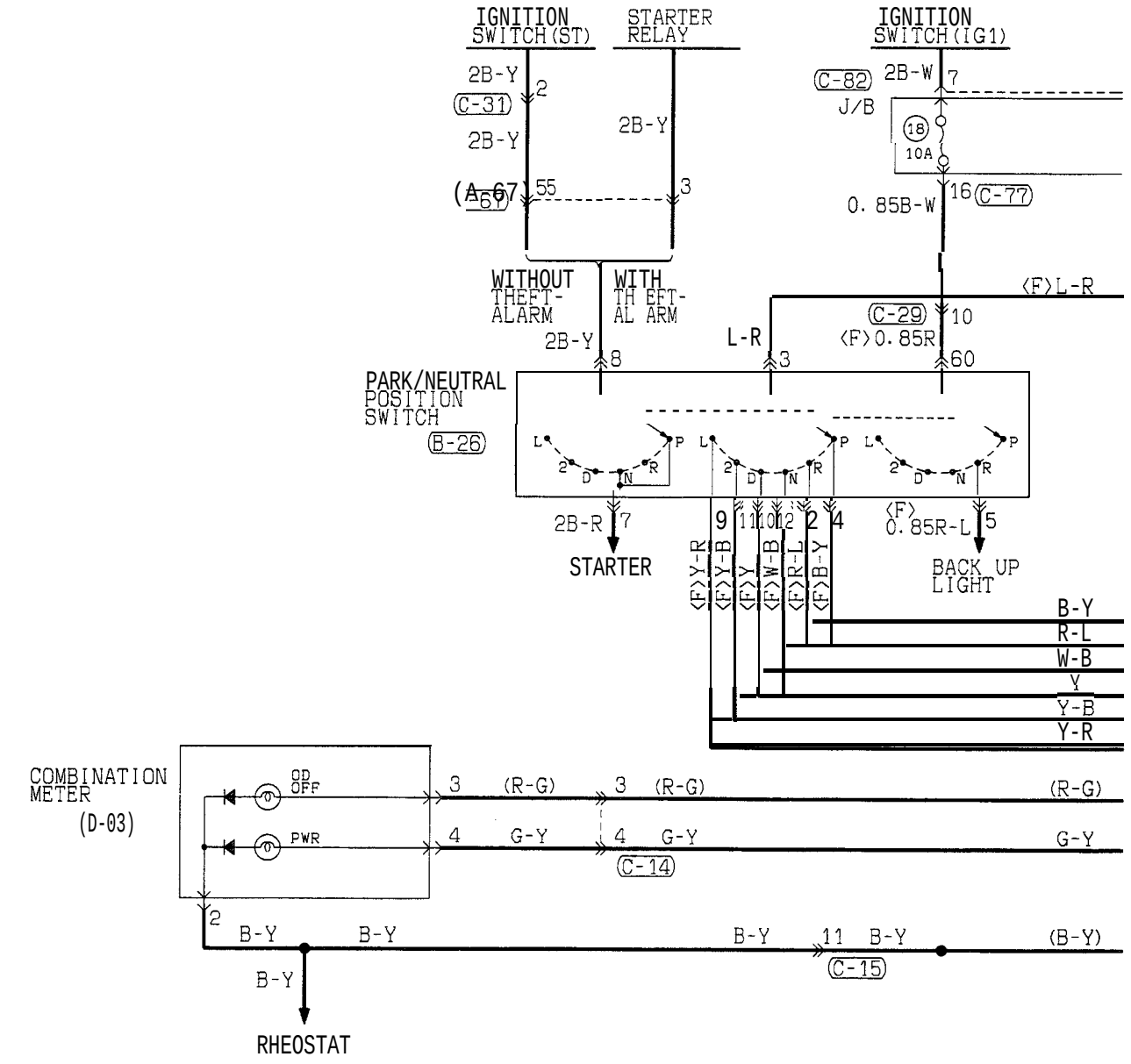

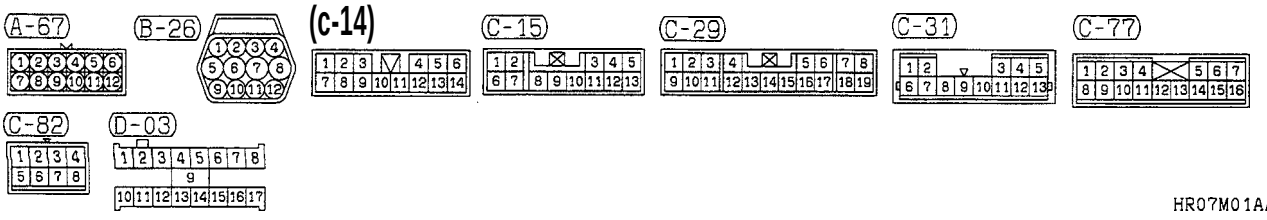

HR07M01AA

TSB Revision

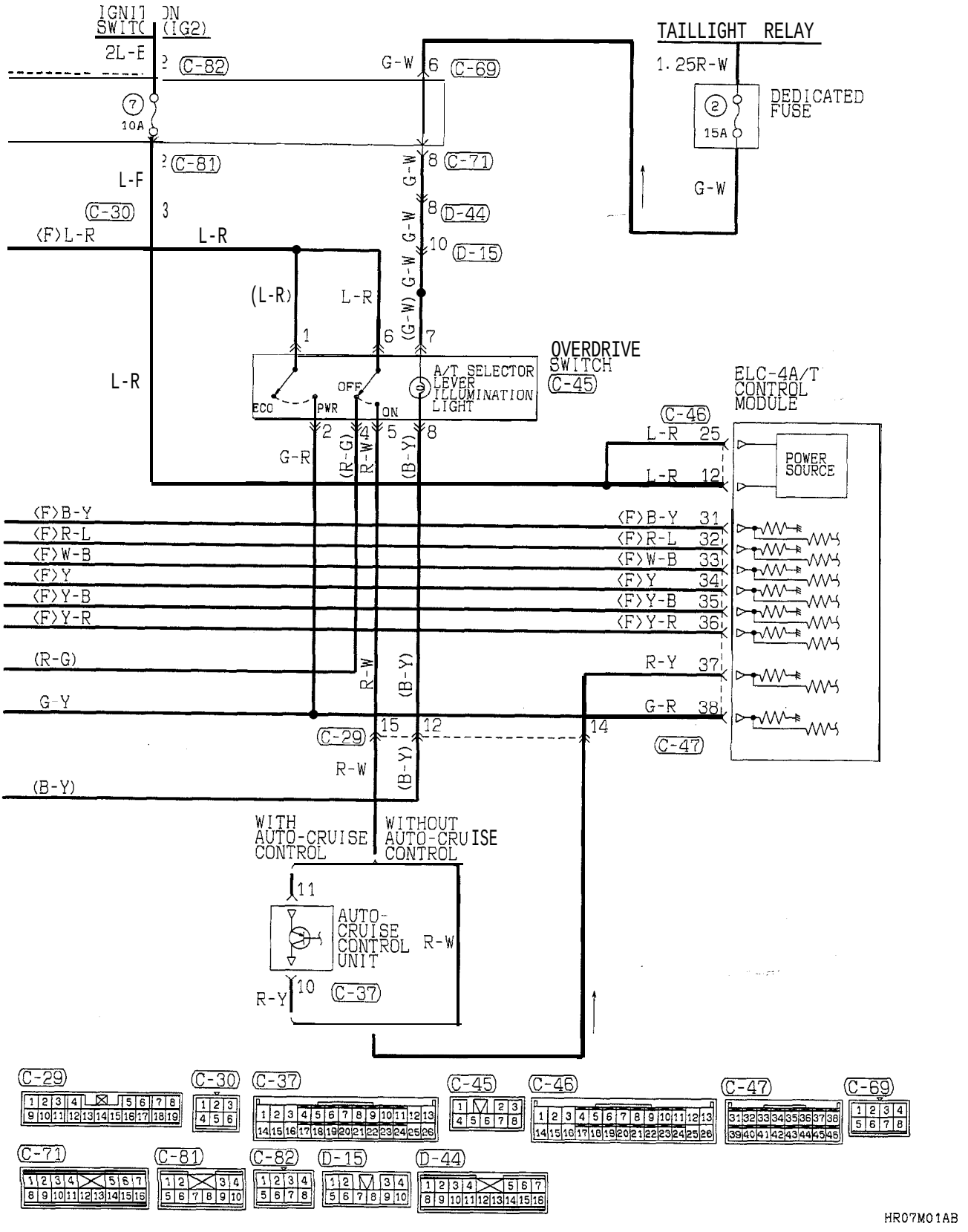

TSB Revision

ELC-4 A/T CIRCUIT (1993 MODELS) (CONTINUED)

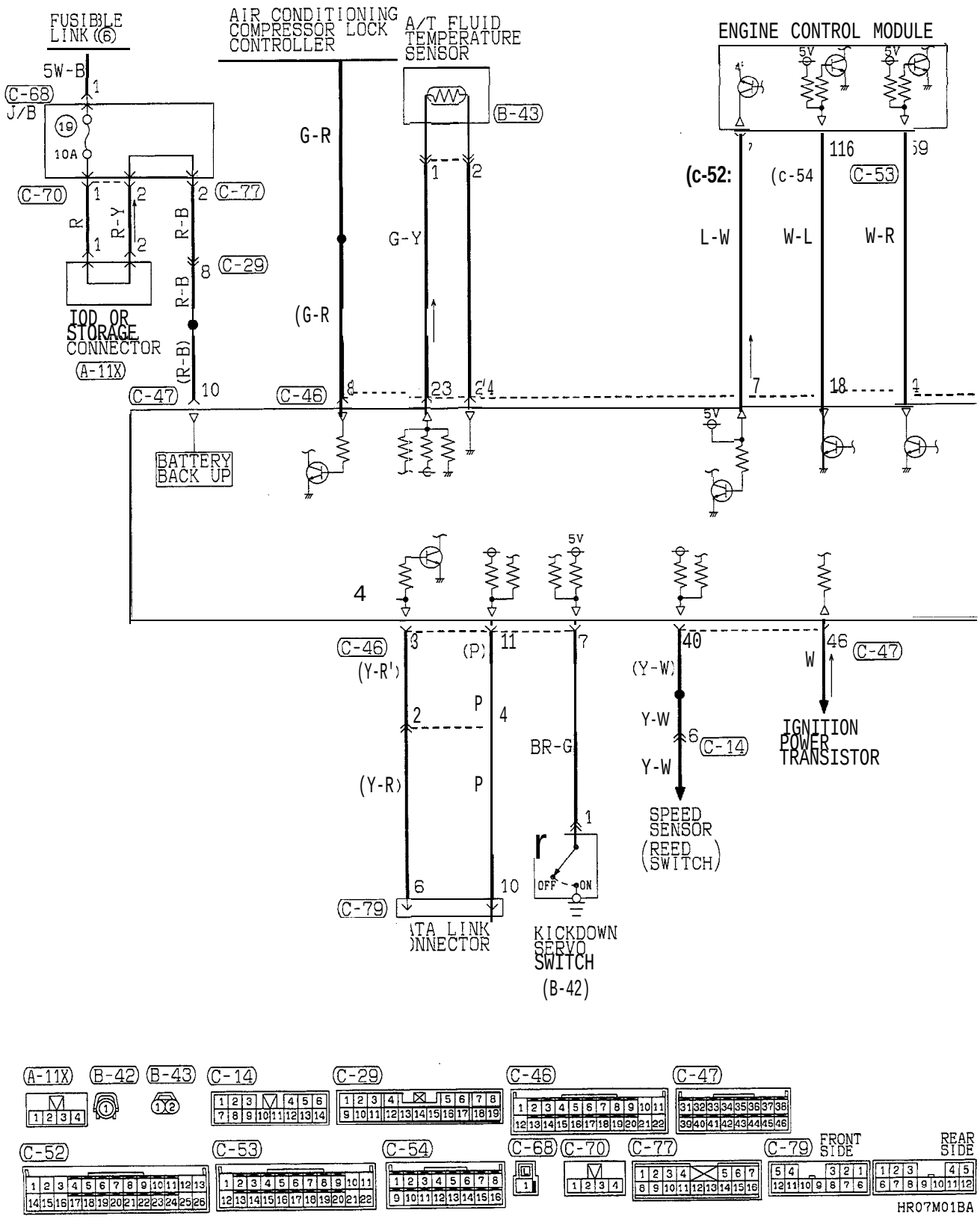

TSB Revision

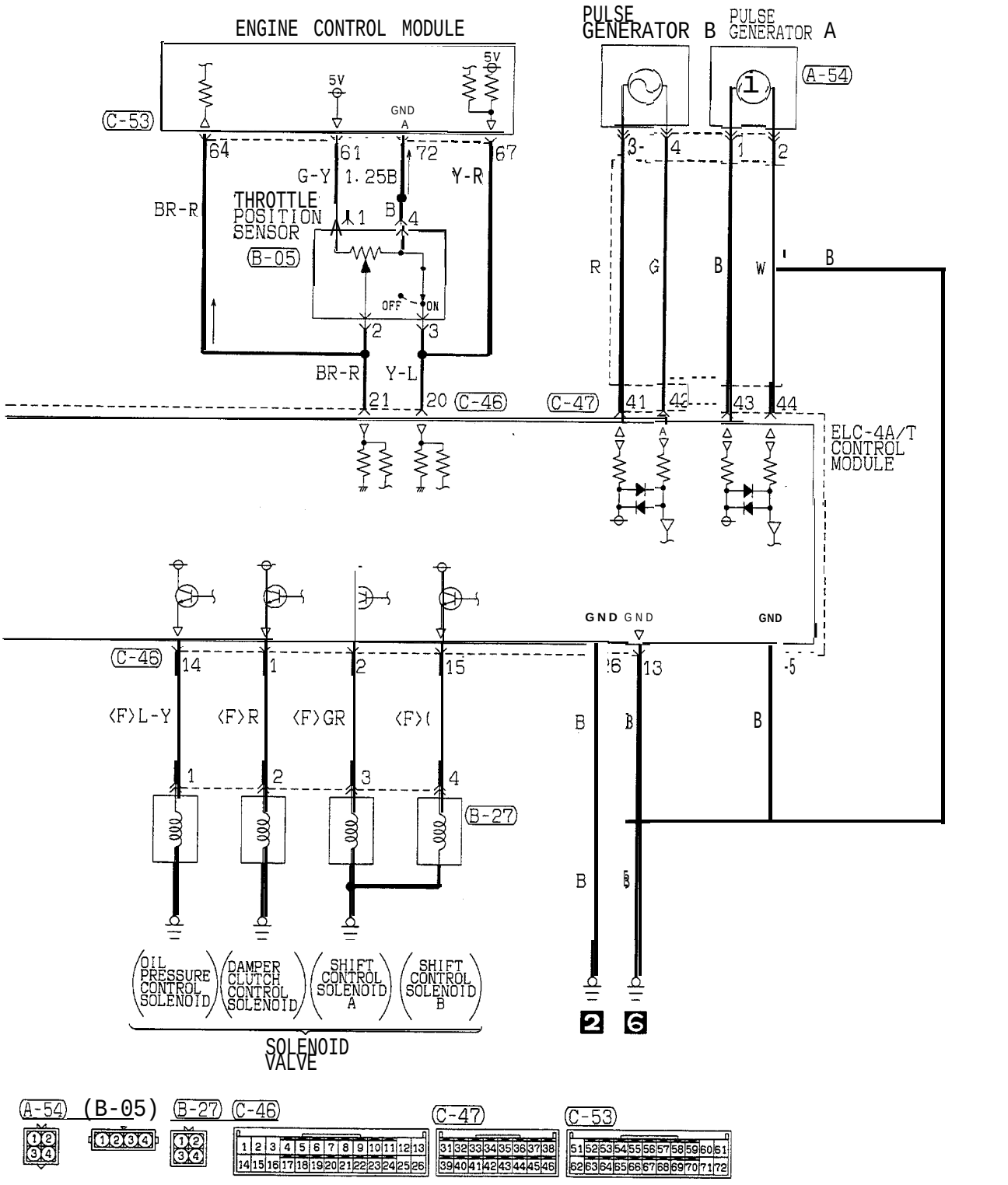

HR07M01BB

TSB Revision

ELC-4 A/T CIRCUIT (1994, 1995 MODELS)

(FEDERAL)

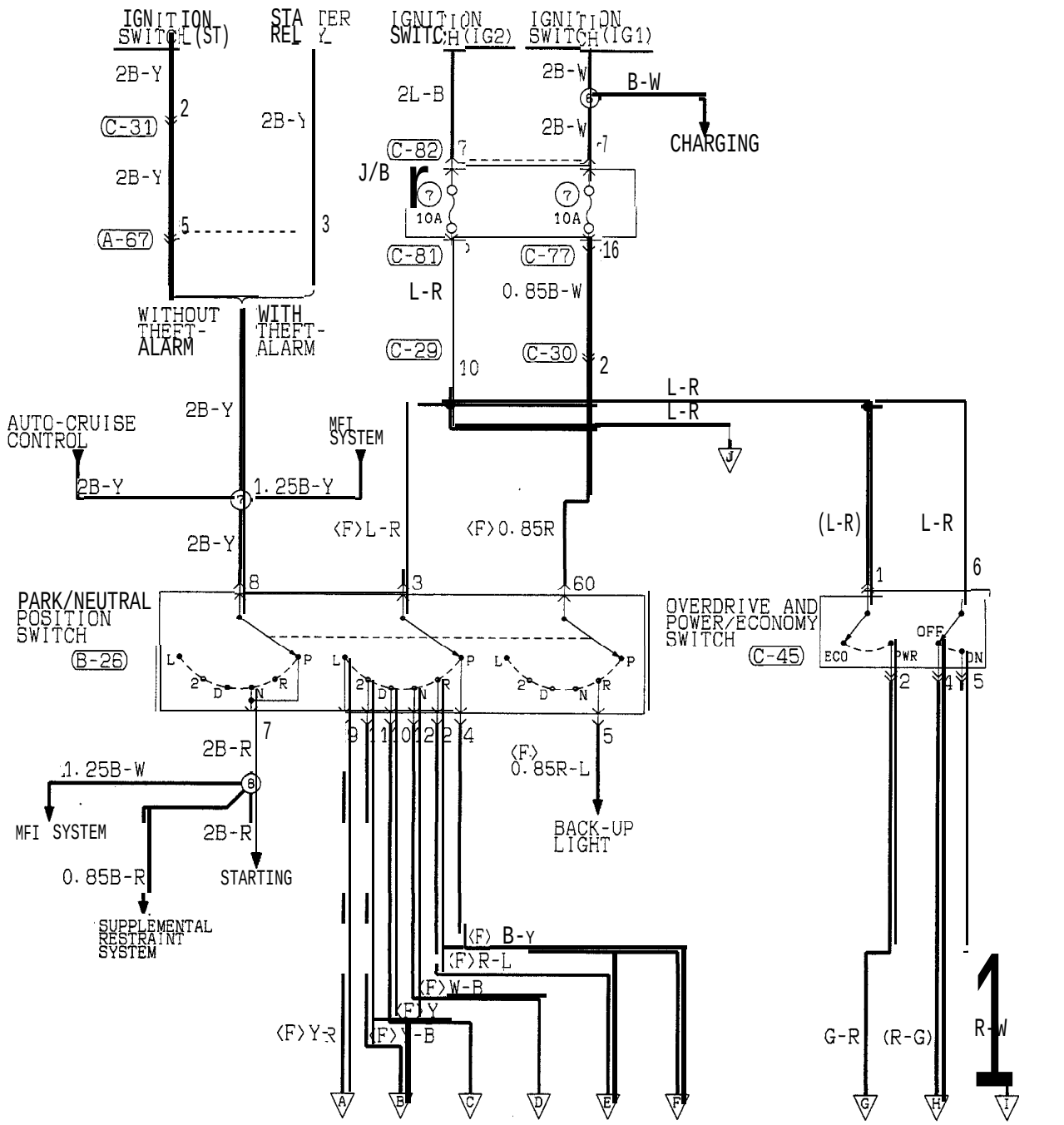

HR07M02AA

TSB Revision

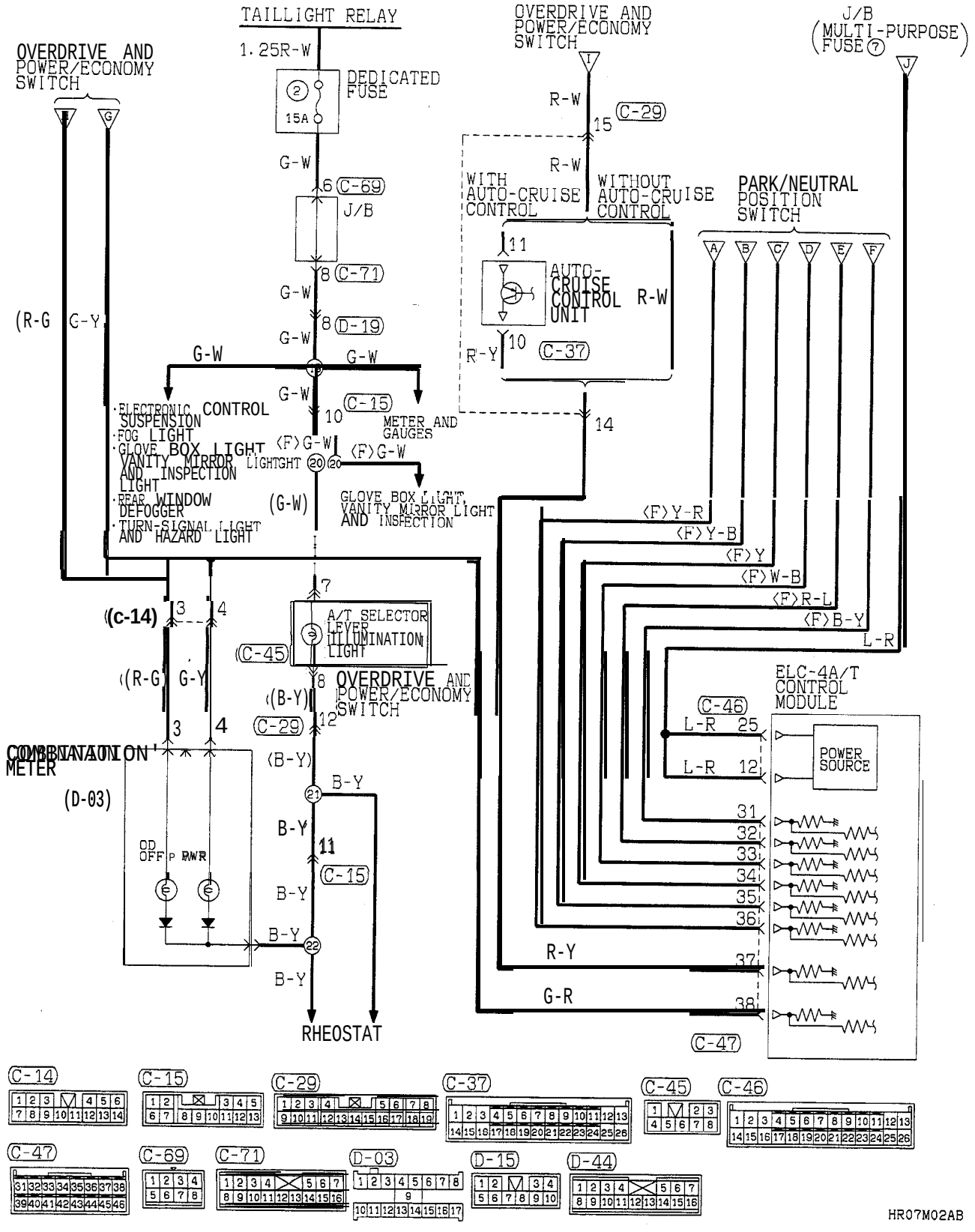

TSB Revision

ELC-4 A/T CIRCUIT (1994, 1995 MODELS) (FEDERAL) (CONTINUED)

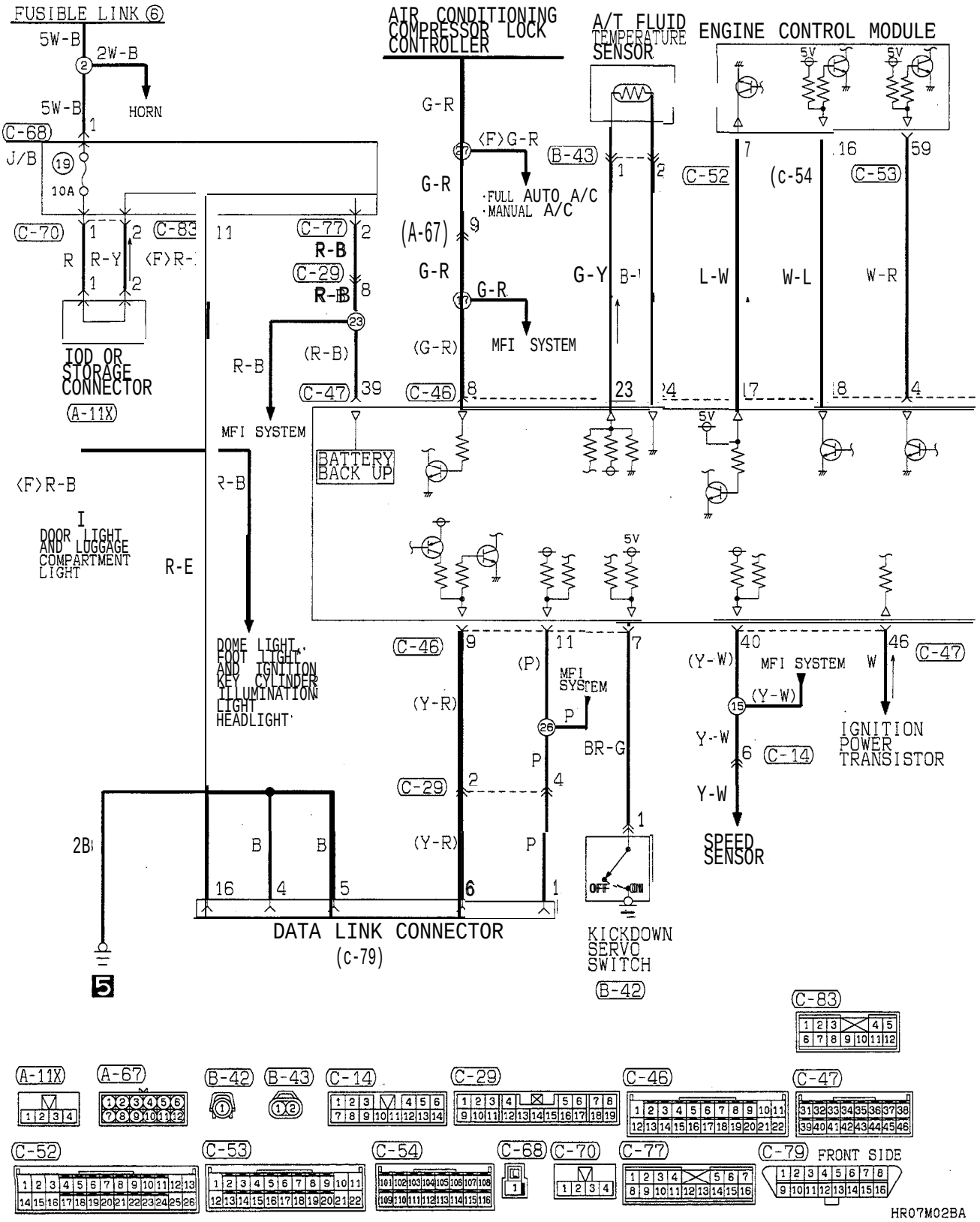

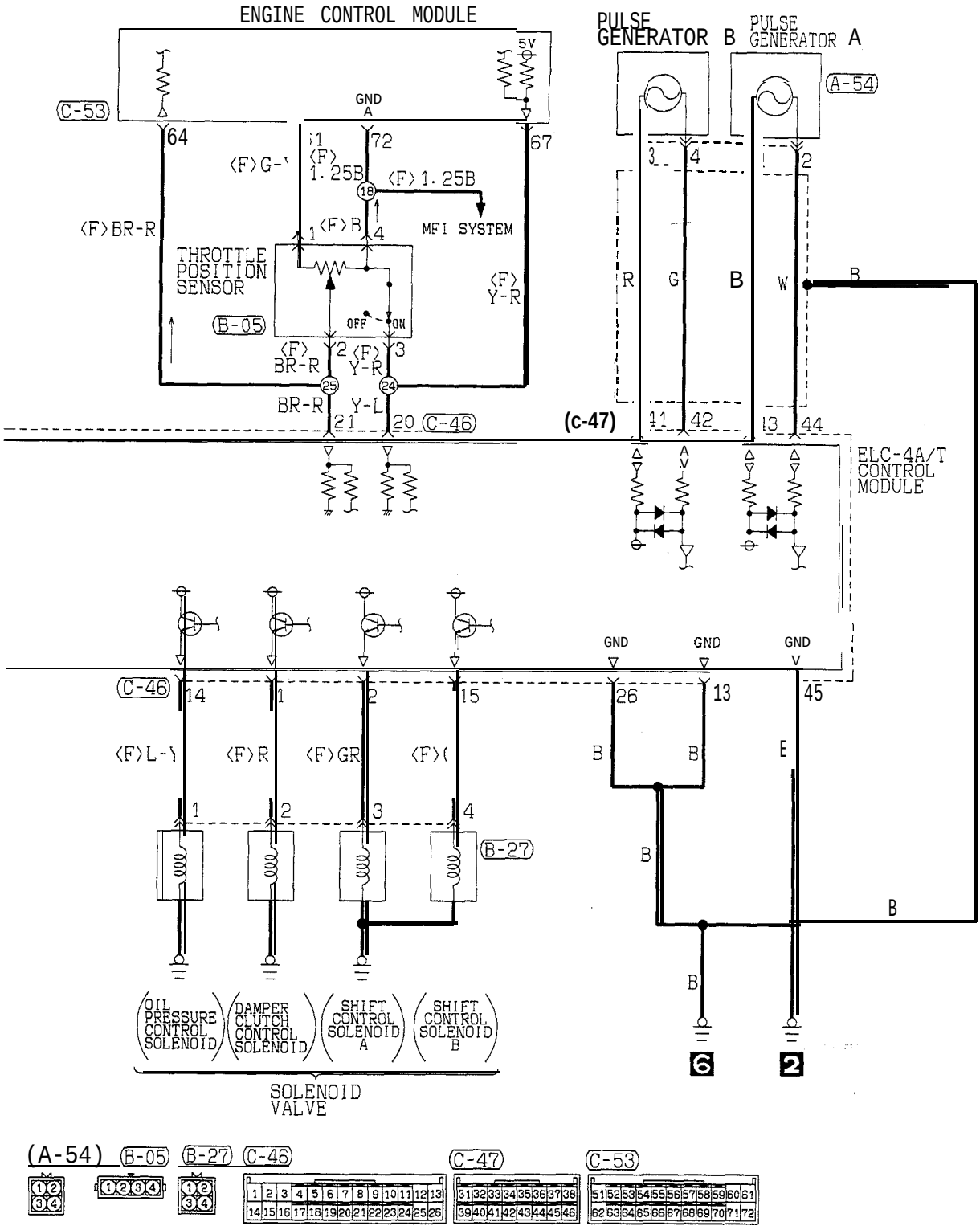

HR07M02BB

TSB Revision

ELC-4 A/T CIRCUIT (1994, 1995 MODELS)

(CALIFORNIA)

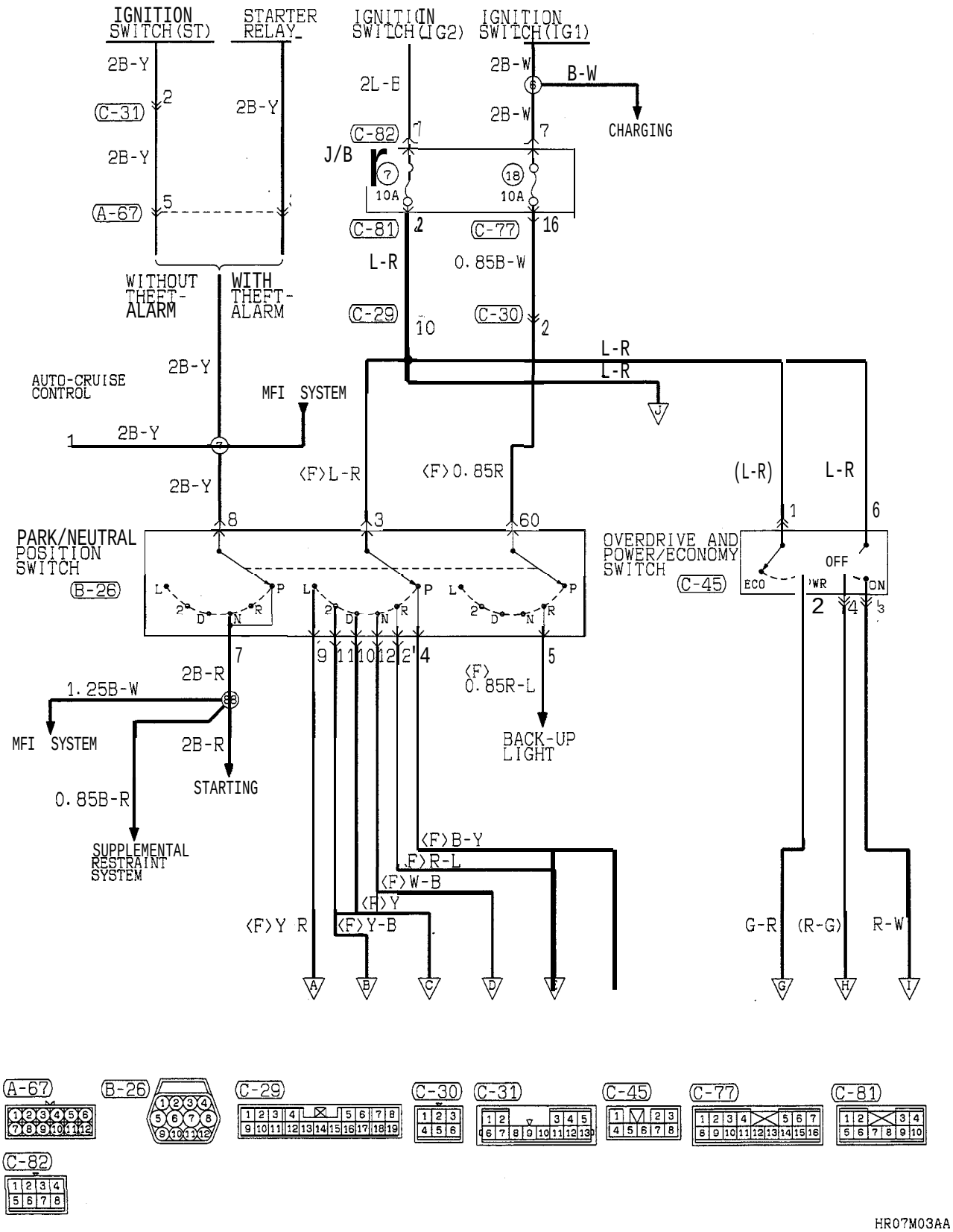

TSB Revision

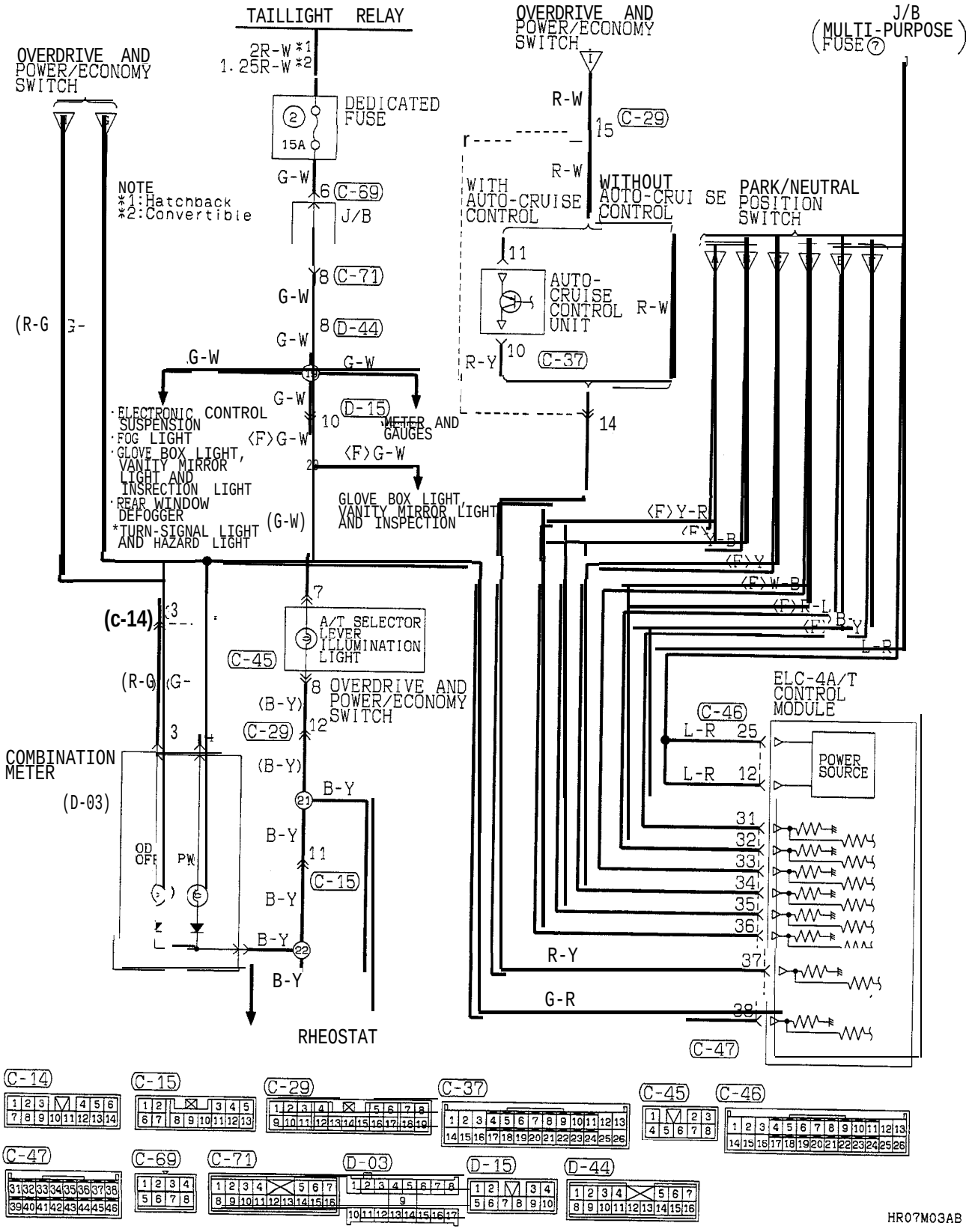

TSB Revision

ELC-4 A/T CIRCUIT (1994, 1995 MODELS) (CALIFORNIA) (CONTINUED)

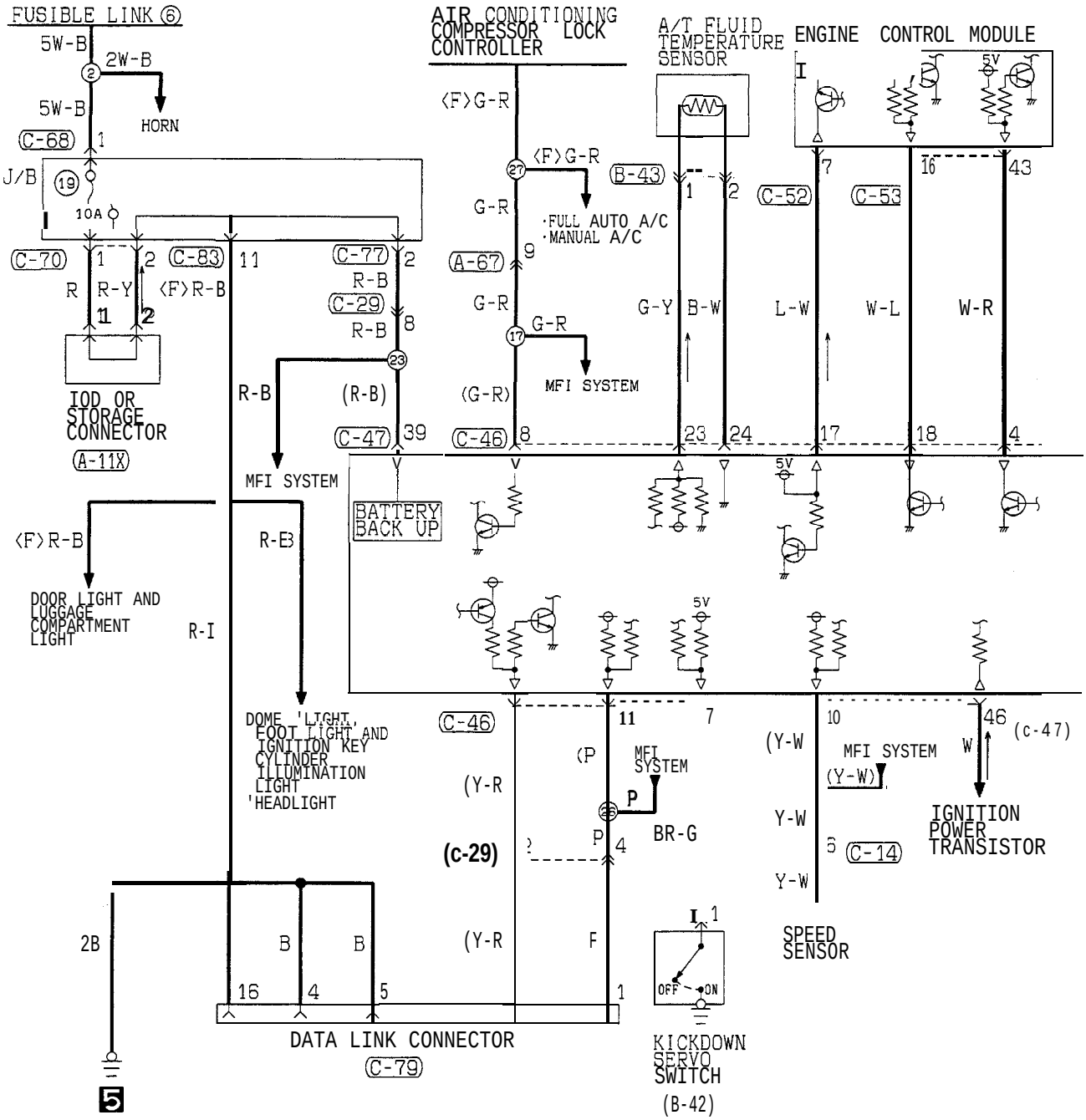

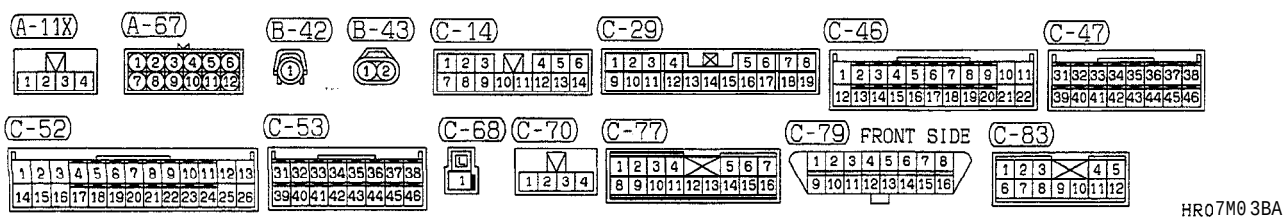

HR07M03BA

TSB Revision

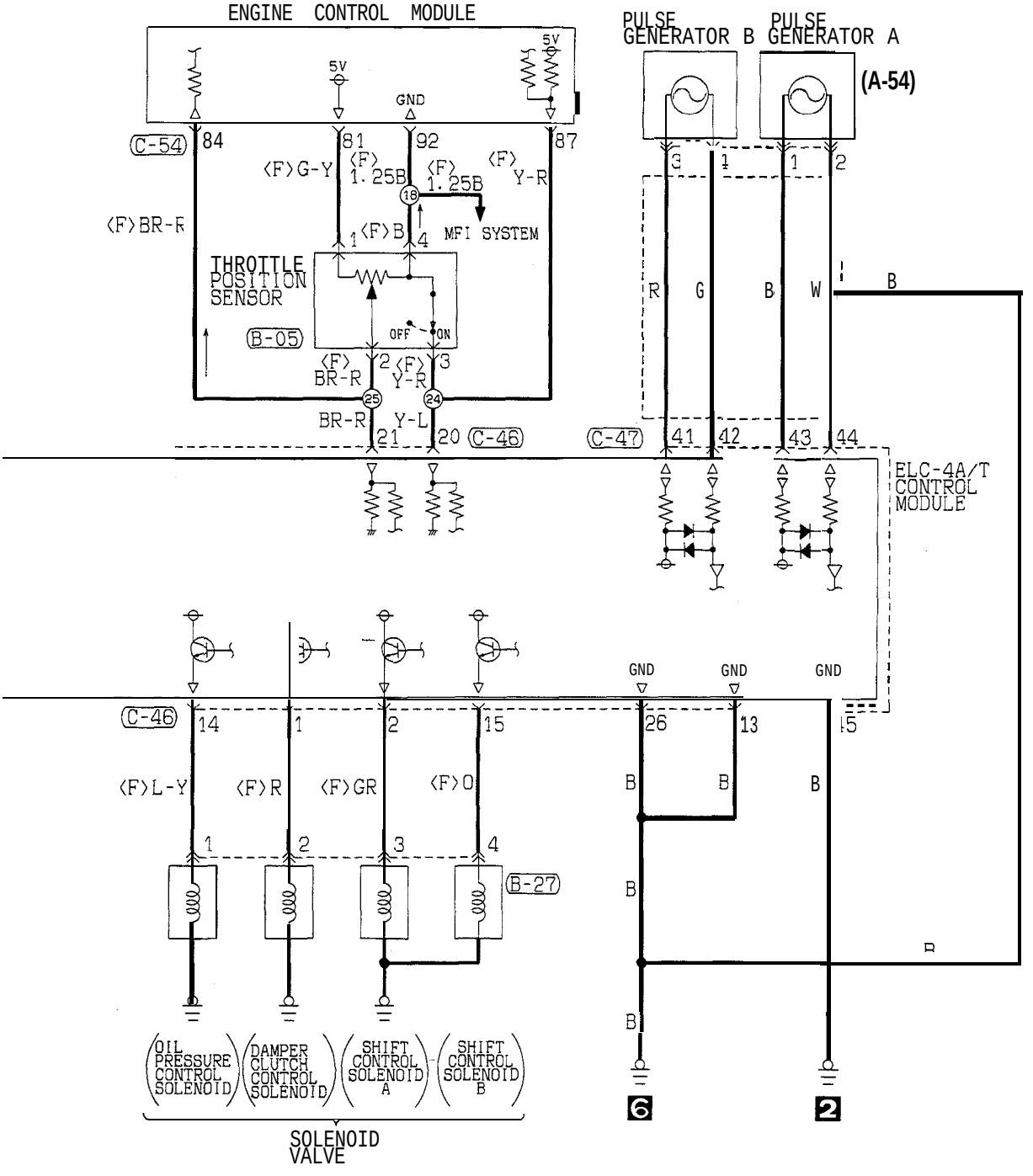

HR07M03BB

TSB Revision

ELC-4 A/T CIRCUIT (FROM 1996 MODELS)

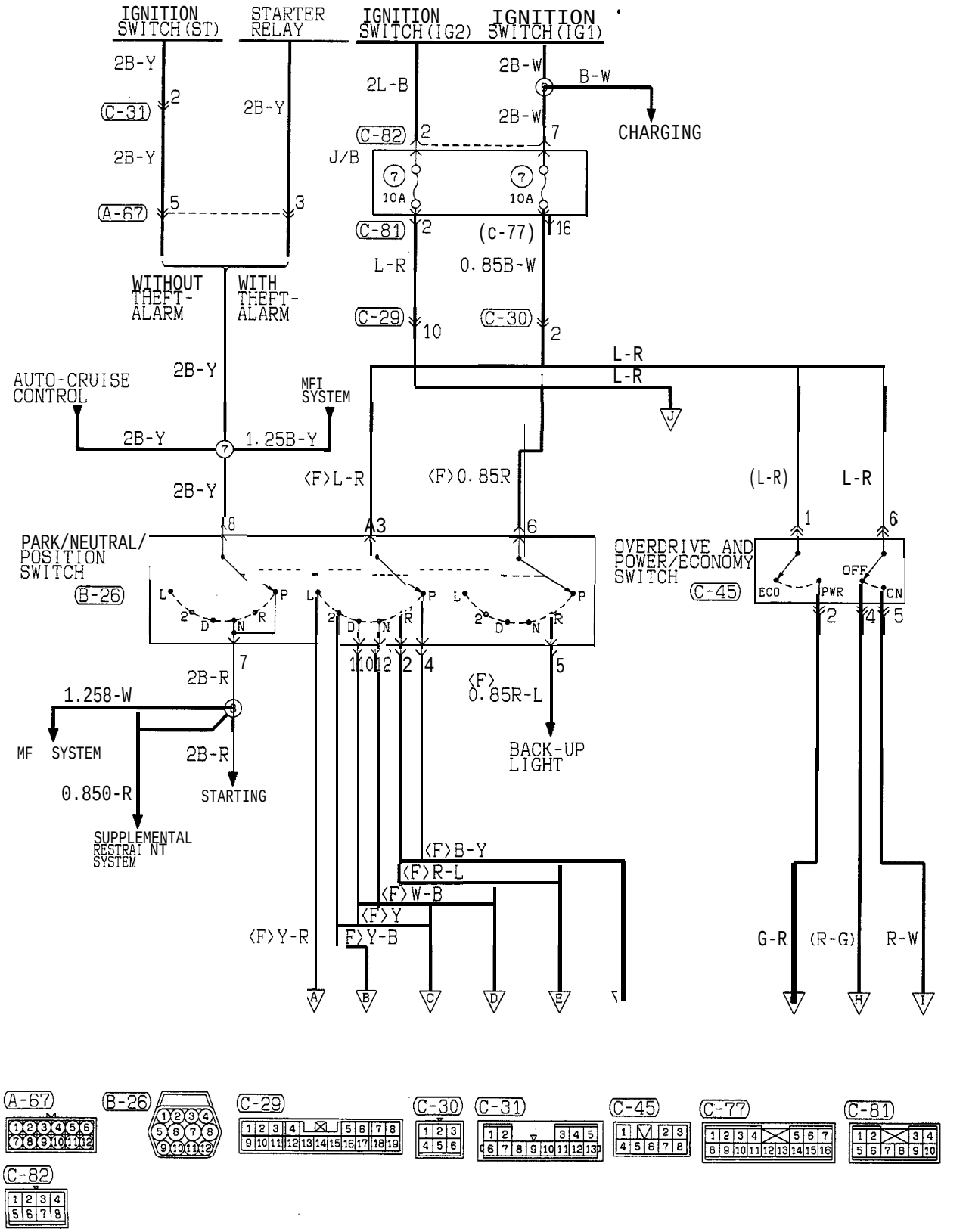

TSB Revision

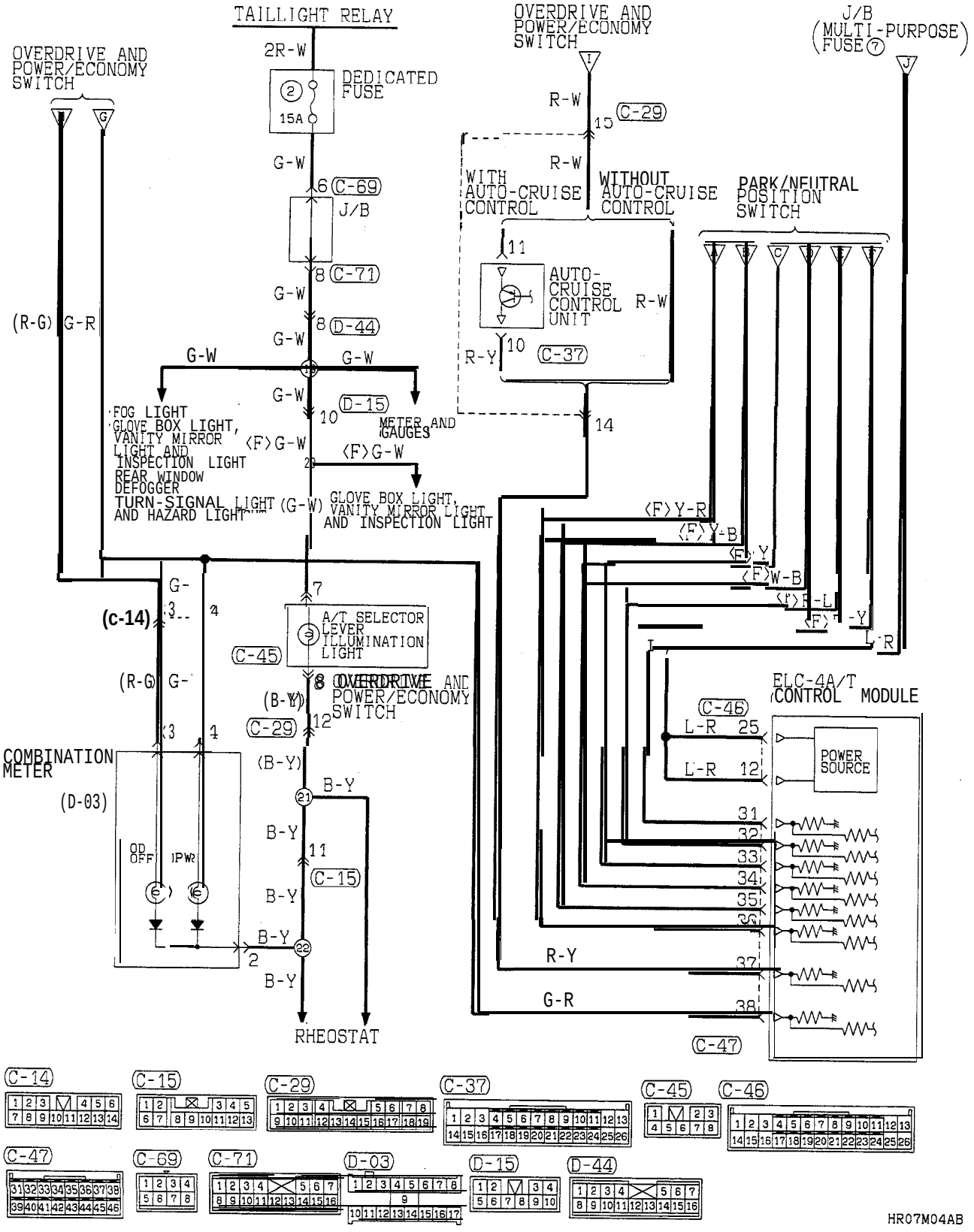
TAILLIGHT RELAY
OVERDRIVE AND POWER/ECONOMY SWITCH
J/B (MULTI-PURPOSE FUSE 7)
2R-W
DEDICATED FUSE
15A
G-W
C-69
J/B
C-71
D-44
D-15
FOG LIGHT
GLOVE BOX LIGHT, VANITY MIRROR LIGHT AND INSPECTION LIGHT
REAR WINDOW DEFOGGER
TURN-SIGNAL LIGHT AND HAZARD LIGHT
METER AND GAUGES
GLOVE BOX LIGHT, VANITY MIRROR LIGHT AND INSPECTION LIGHT
R-W
C-29
WITH AUTO-CRUISE CONTROL
WITHOUT AUTO-CRUISE CONTROL
PARK/NEUTRAL POSITION SWITCH
AUTO-CRUISE CONTROL UNIT
R-Y
C-37
(R-G)
G-R
(c-14)
A/T SELECTOR LEVER ILLUMINATION LIGHT
C-45
(B-Y)
OVERDRIVE AND POWER/ECONOMY SWITCH
COMBINATION METER
D-03
OD OFF
PWR
B-Y
C-15
RHEOSTAT
ELC-4A/T CONTROL MODULE
C-46
L-R
POWER SOURCE
R-Y
G-R
C-47
C-14
C-15
C-29
C-37
C-45
C-46
C-47
C-69
C-71
D-03
D-15
D-44
HR07M04AB

ELC-4 A/T CIRCUIT (FROM 1996 MODELS) (CONTINUED)

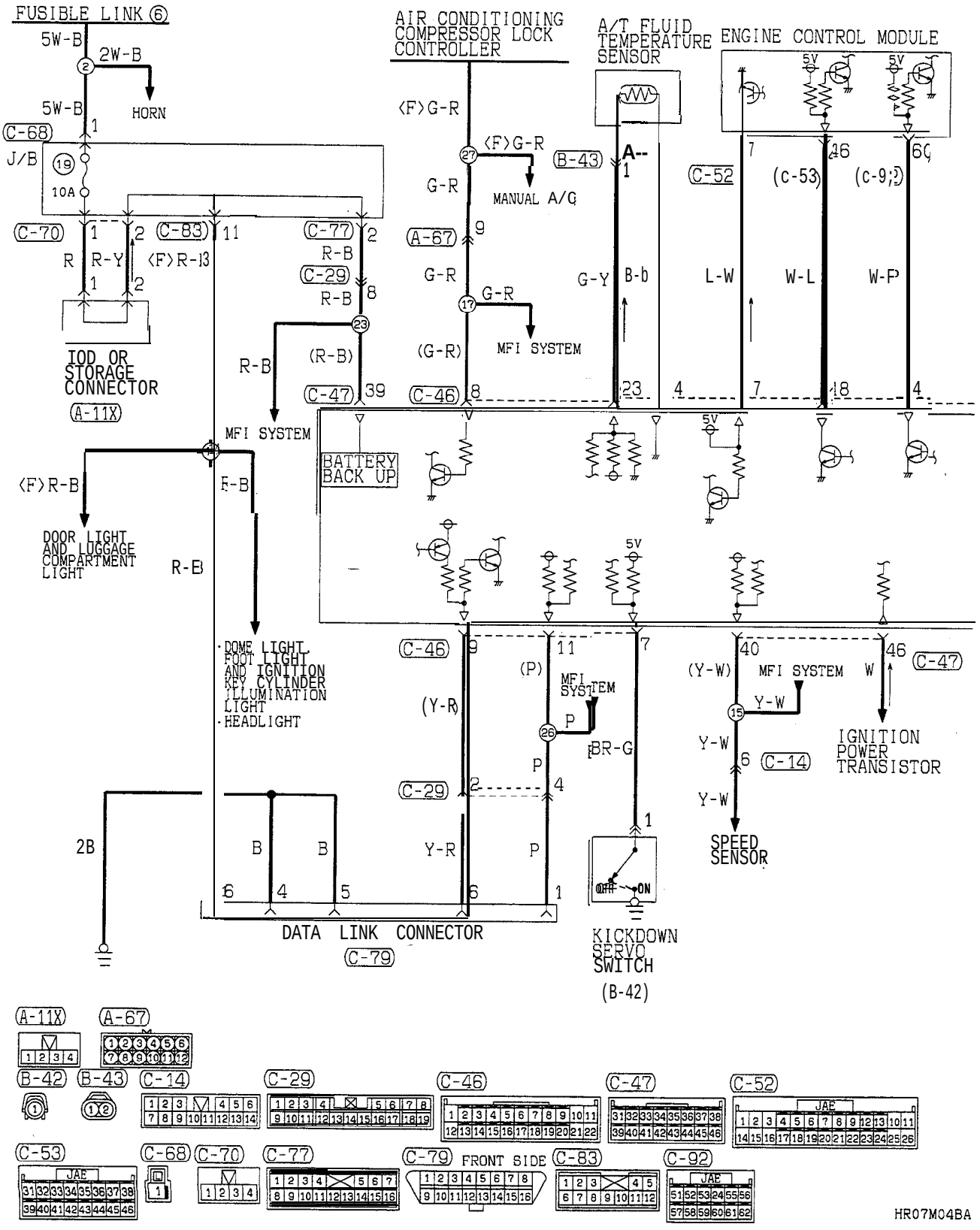

TSB Revision

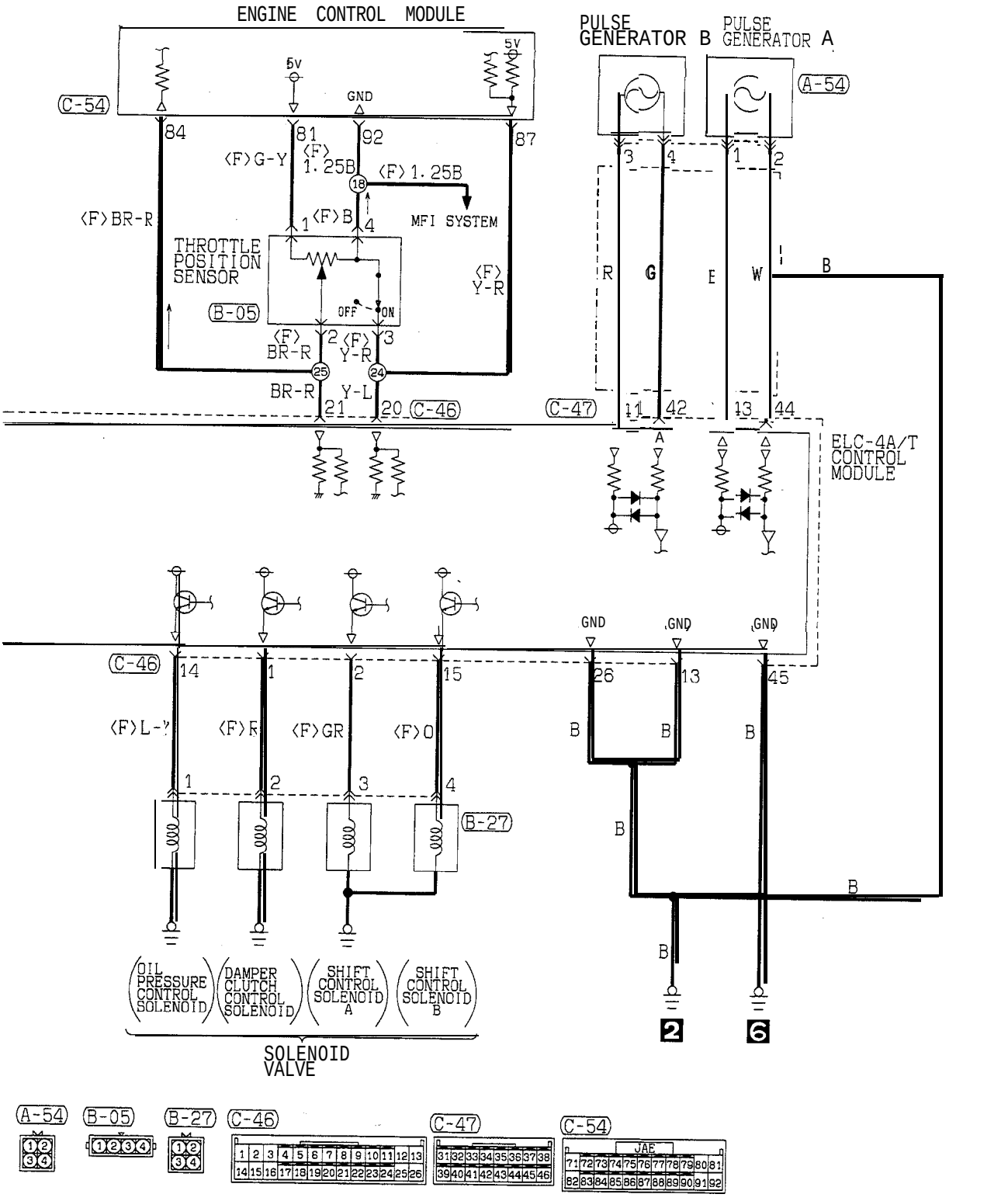
ENGINE CONTROL MODULE
PULSE GENERATOR B
PULSE GENERATOR A
C-54
A-54
5V
GND
84
81
92
87
(F)G-Y
(F) 1.25B
(F) 1.25B
(F)BR-R
(F)B
MFI SYSTEM
THROTTLE POSITION SENSOR
B-05
OFF
ON
(F) Y-R
(F) BR-R
(F) Y-R
BR-R
Y-L
20
C-46
C-47
R
G
E
W
B
ELC-4A/T CONTROL MODULE
GND
GND
GND
14
1
2
15
26
13
45
(F)L-Y
(F)R
(F)GR
(F)O
B-27
OIL PRESSURE CONTROL SOLENOID
DAMPER CLUTCH CONTROL SOLENOID
SHIFT CONTROL SOLENOID A
SHIFT CONTROL SOLENOID B
SOLENOID VALVE
2
6
A-54
B-05
B-27
C-46
C-47
C-54
JAE

HR07M04BB

COMPONENT LOCATION

Name	Symbol	Name	Symbol
A/T fluid temperature sensor	A	ELC-4 A/T control module	F
A/T solenoid valve assembly (valve body)	B	Engine control module	D
Auto-cruise control unit	G	Kickdown servo switch	A
Data link connector (from 1994 models)	E	Pulse generator	A
Data link connector (up to 1993 models)	D	Throttle position sensor	C

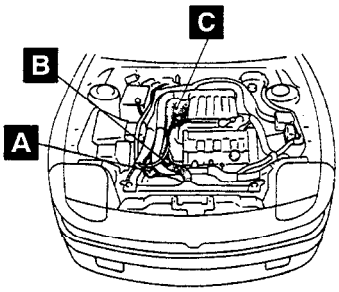

T16F0257

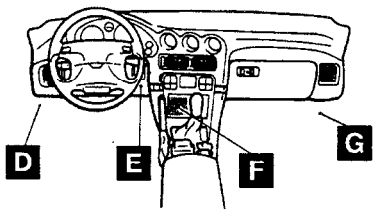

Q19F0134
00002686

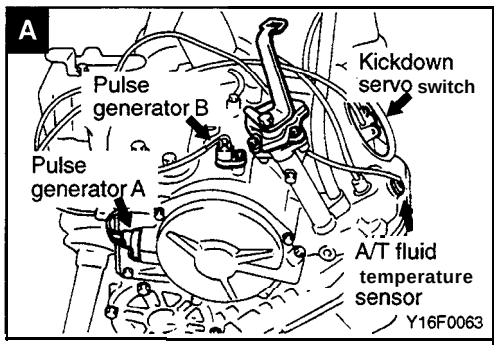

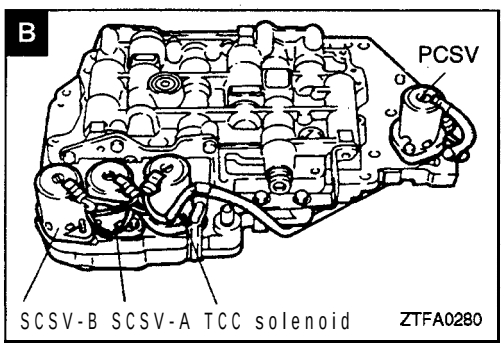

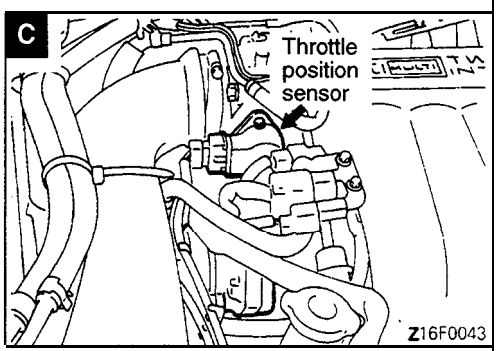

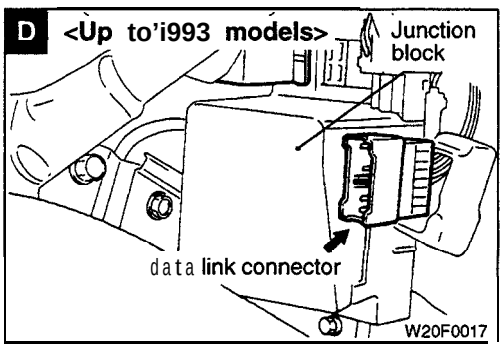

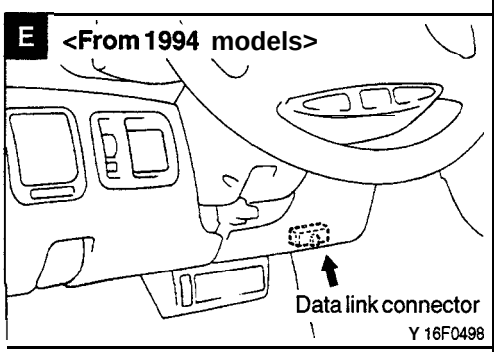

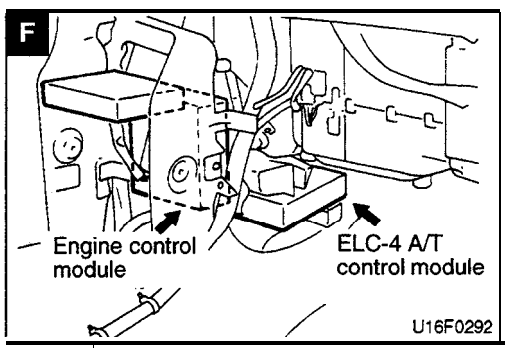

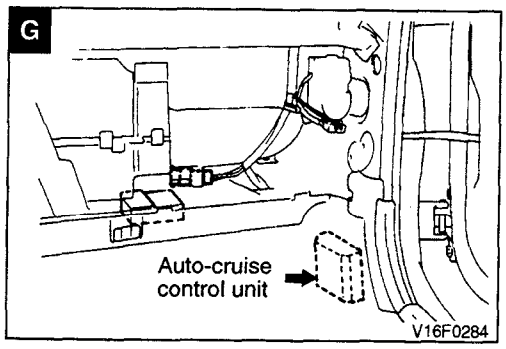
G
Auto-cruise
control unit
V16F0284

BUZZER CIRCUIT (UP TO 1993 MODELS)

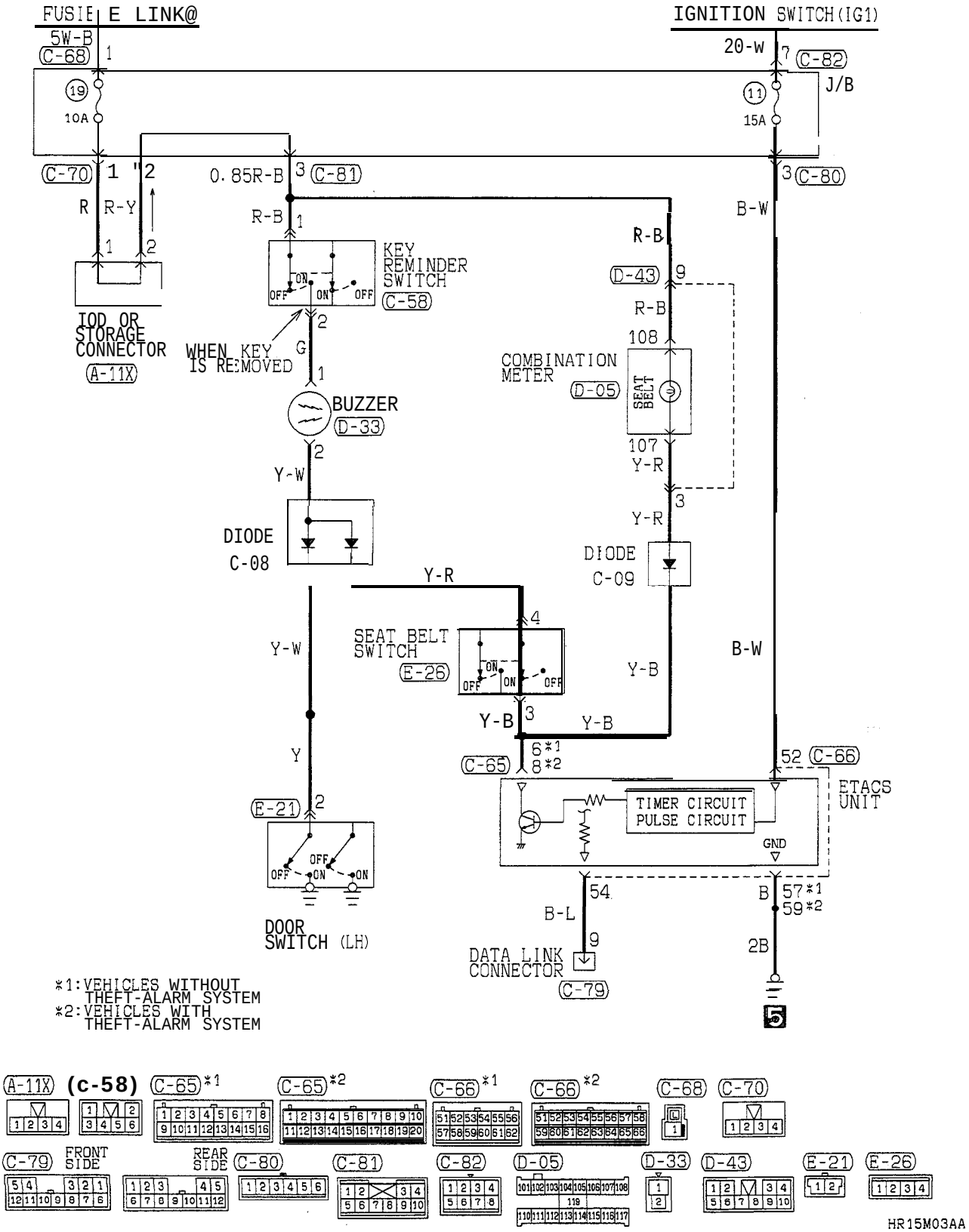

BUZZER CIRCUIT (FROM 1994 MODELS)

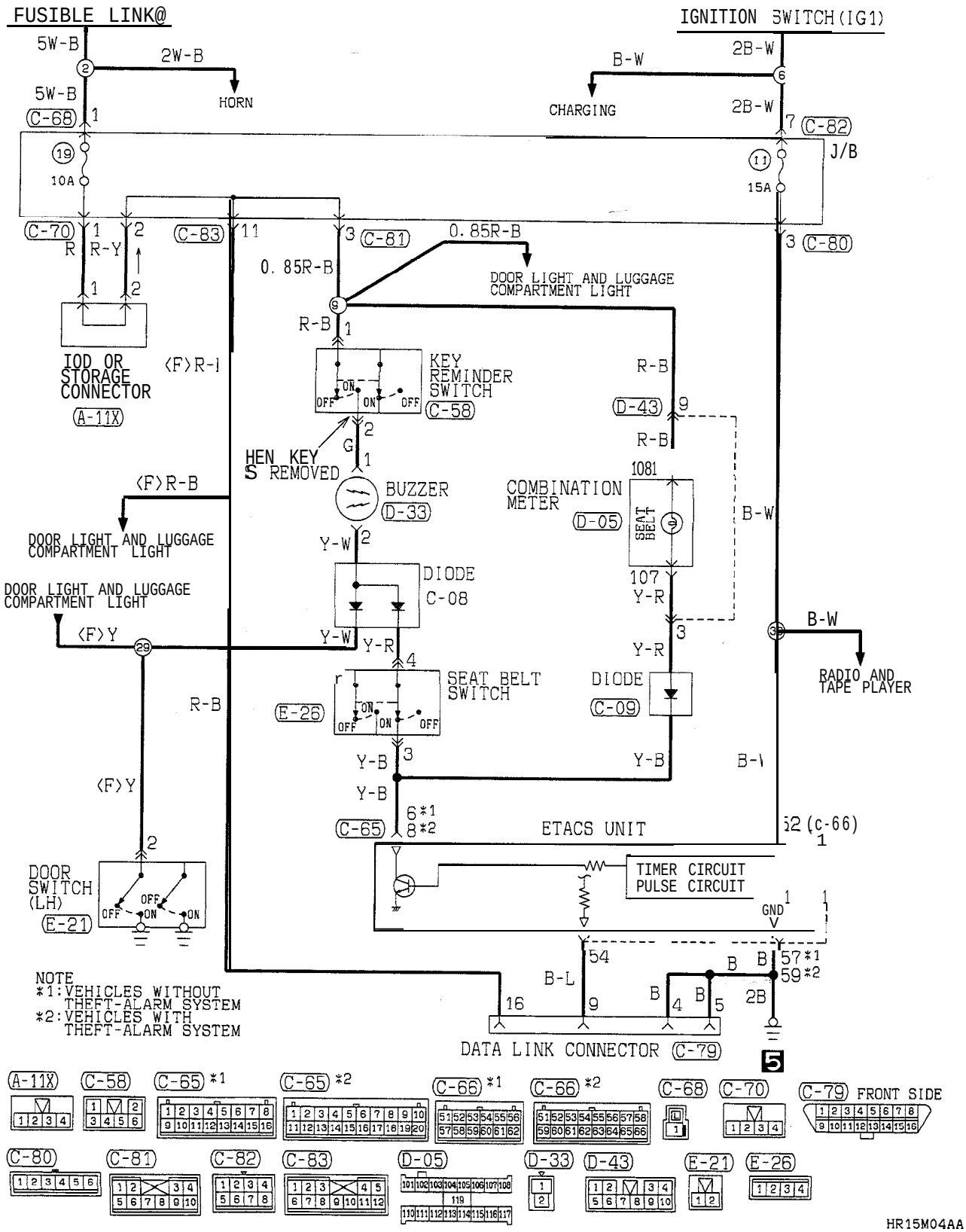

COMPONENT LOCATION

Name	Symbol	Name	Symbol
Buzzer	C	ETACS unit	A
Diode (seat belt warning)	B		

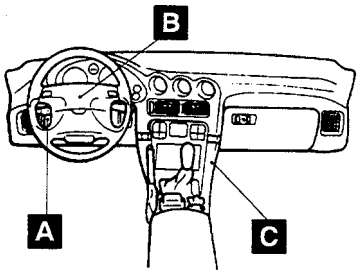

P19F0134

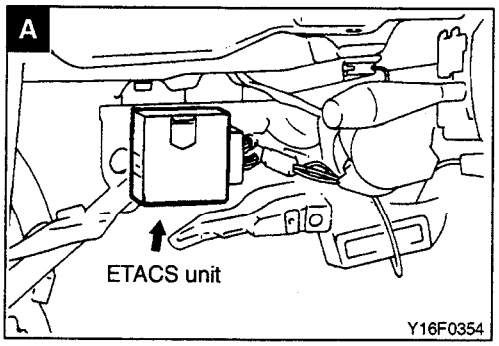

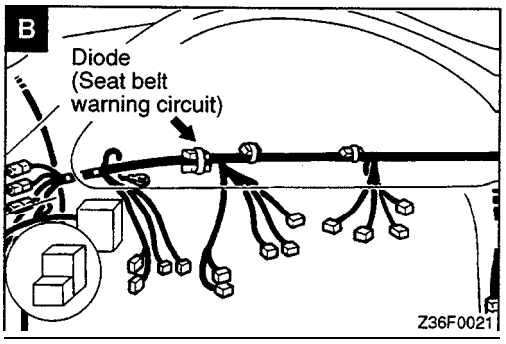

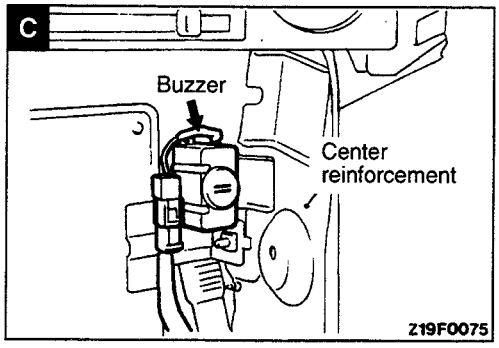

OPERATION

<Key-reminder warning>

- Battery positive voltage is continuously applied to the key-reminder switch.
- If the driver's door is opened (door switch ON) with the key inserted in the ignition switch (key-reminder switch ON), the buzzer sounds to warn that the key has been left in the switch.

<Seat belt warning>

- When the ignition switch is turned on, the timer circuit and pulse circuit will flicker the seat belt warning light for approx. 6 seconds with the buzzer intermittently sounding.
- If the seat belt is fastened for the while, the seat belt switch will be turned off and the buzzer will stop.

TROUBLESHOOTING HINTS

Problem		Check method
The key-reminder warning doesn't sound.	The seat belt warning function is OK.	• Check the door switch. (Refer to GROUP 42–Door Assembly.)
	The seat belt warning also doesn't function.	• Check the buzzer. (Refer to GROUP 52A–Seat Belt.)
The seat belt warning doesn't function.	The seat belt warning light flashes.	• Check the seat belt switch. (Refer to GROUP 52A–Seat Belt.)
	The seat belt warning light also does not function (and the key-reminder warning also does not function).	• Check the key-reminder switch. (Refer to GROUP M-Ignition Switch.)
The buzzer doesn't stop even through the driver's seat belt has been buckled.		• Check the seat belt switch. (Refer to GROUP 52A–Seat Belt.)
The seat belt warning light doesn't flashes (but the buzzer sounds).		• Check the light bulb. • Check the key-reminder switch. (Refer to GROUP 54–Ignition Switch.) • Check the seat belt switch. (Refer to GROUP 52A–Seat Belt.)
The warning light does not flash and the warning buzzer also does not sound.		• Check the ignition switch input signal. (Refer to GROUP 52A–Troubleshooting.) • Check the key-reminder switch. (Refer to GROUP 54–Ignition Switch.) • Check the seat belt switch. (Refer to GROUP 52A–Seat Belt.)
The warning light flashes, but the warning buzzer does not sound.		• Check the key-reminder switch. (Refer to GROUP M-Ignition Switch.) • Check the seat belt switch. (Refer to GROUP 52A–Seat Belt.)

POWER WINDOW CIRCUIT (UP TO 1993 MODELS)

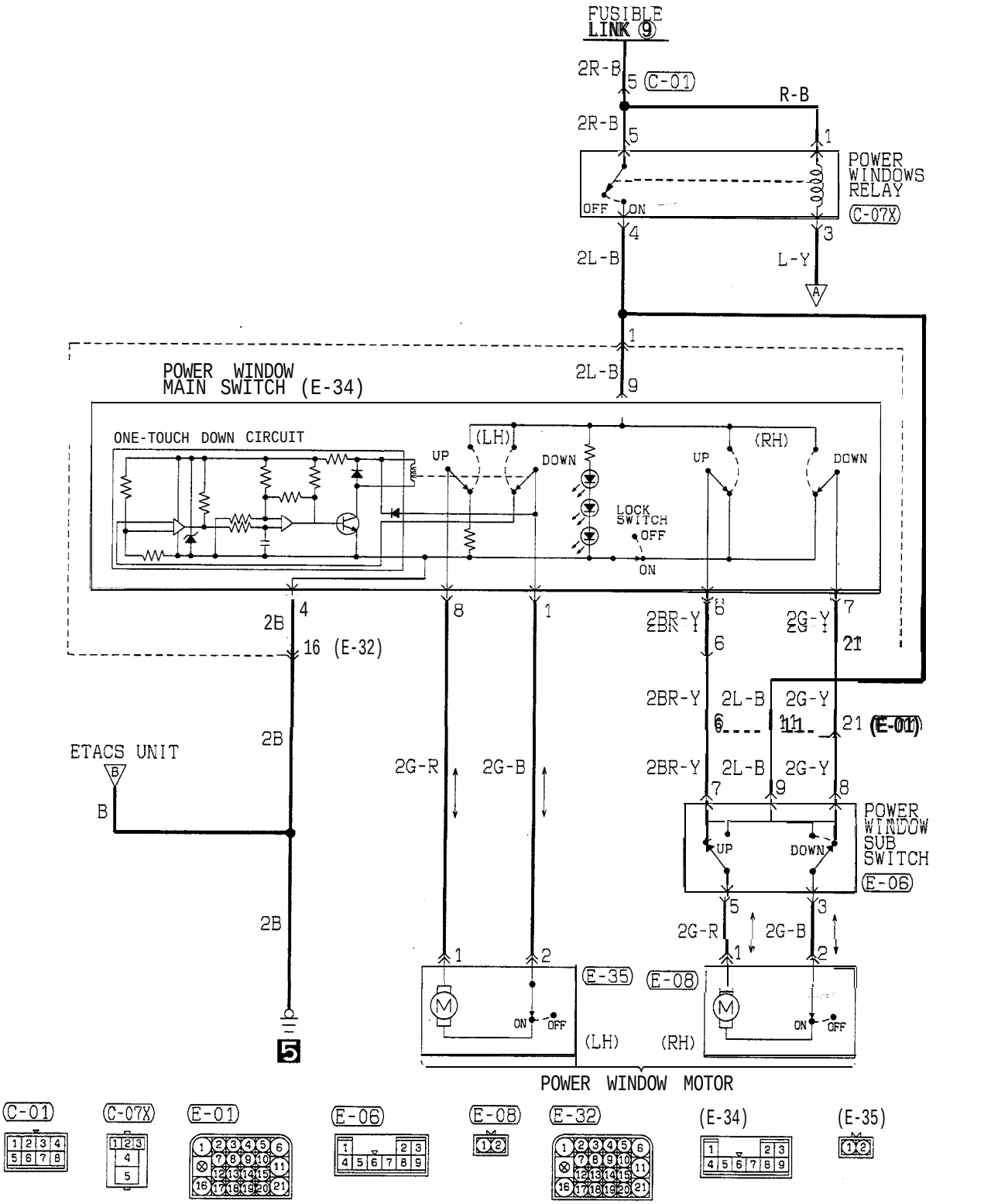

HR11M00AA

TSB Revision

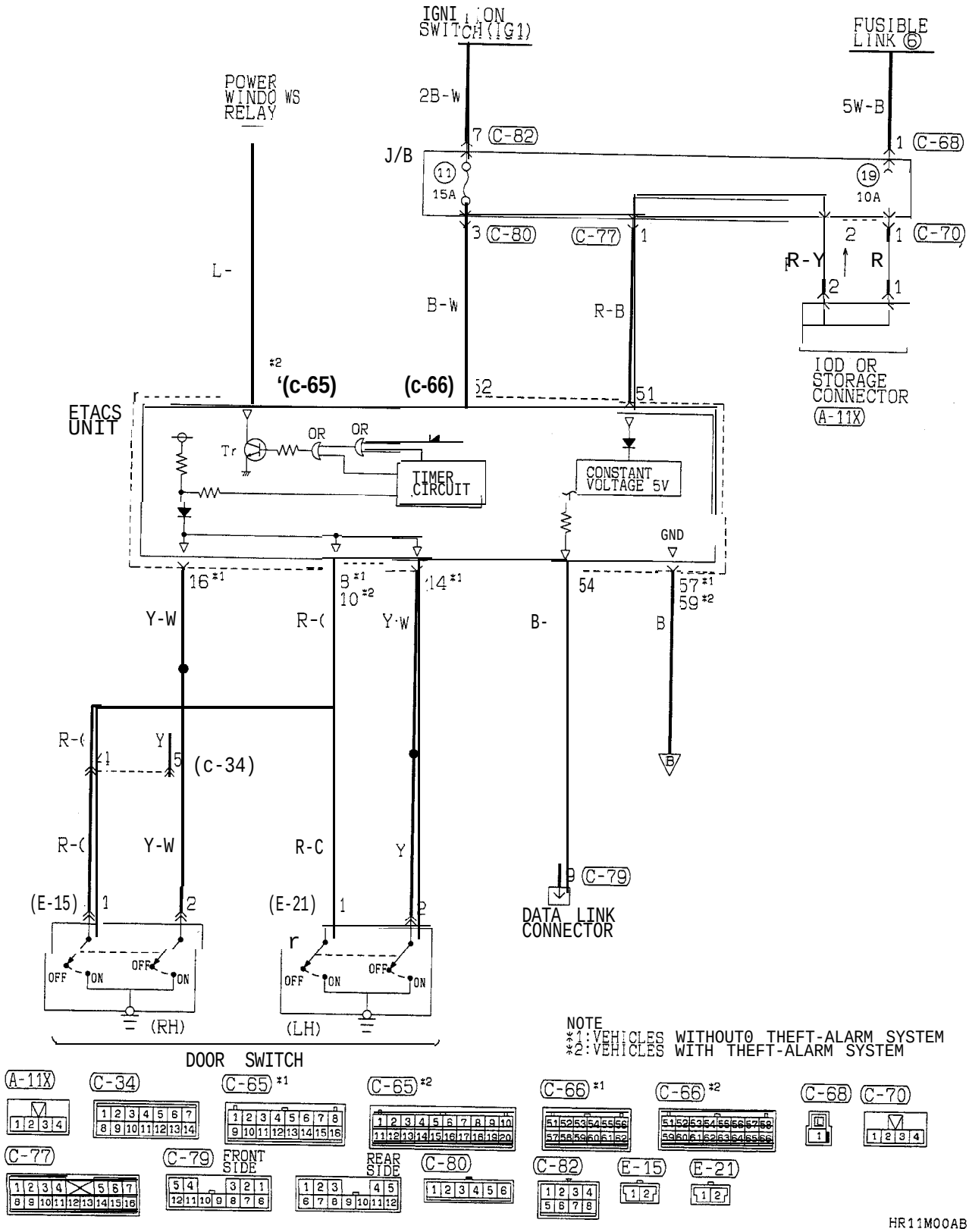

TSB Revision

POWER WINDOW CIRCUIT (1994 MODELS)

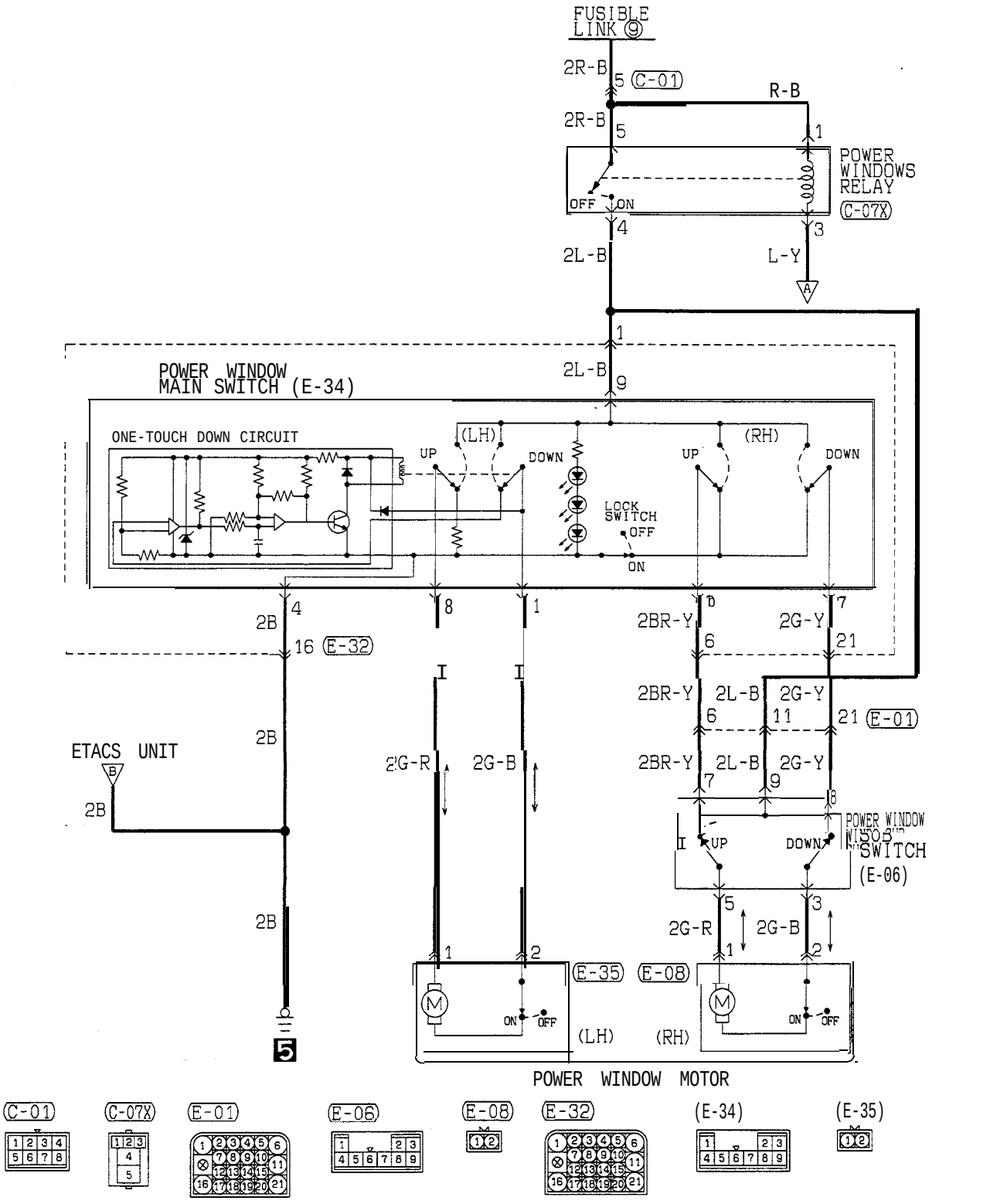

HR11M01AA

TSB Revision

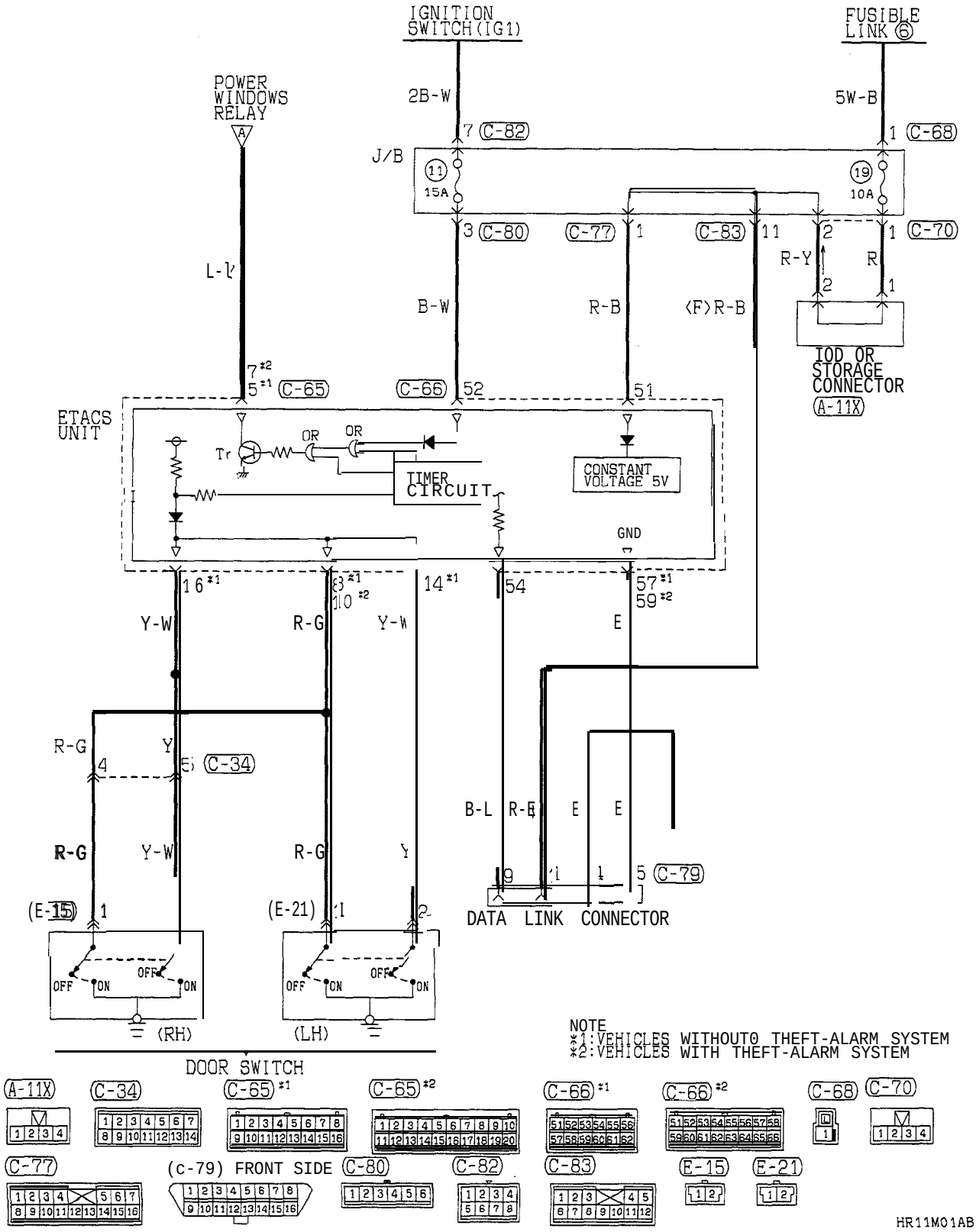

TSB Revision

POWER WINDOW- CIRCUIT (1995 MODELS)

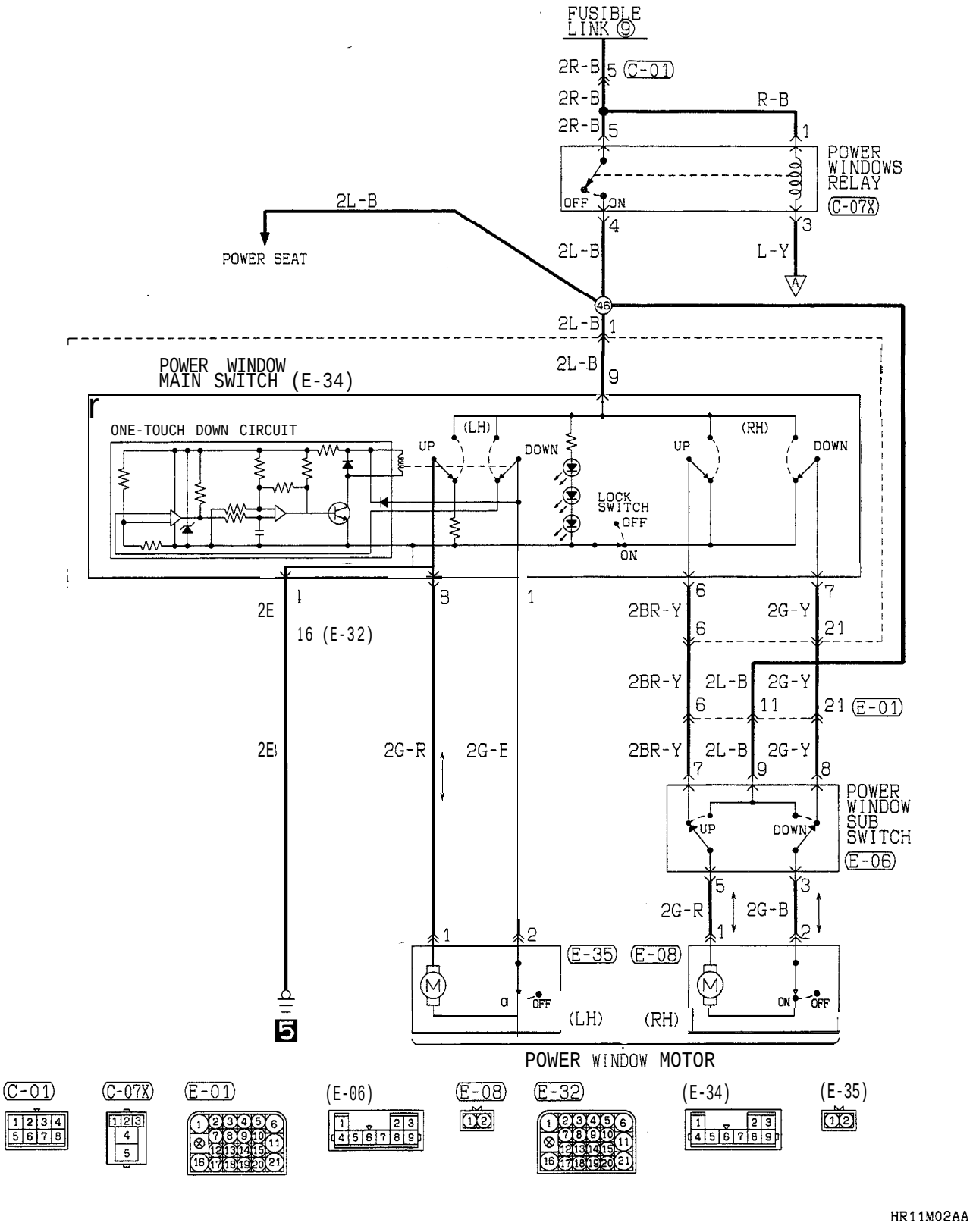

TSB Revision

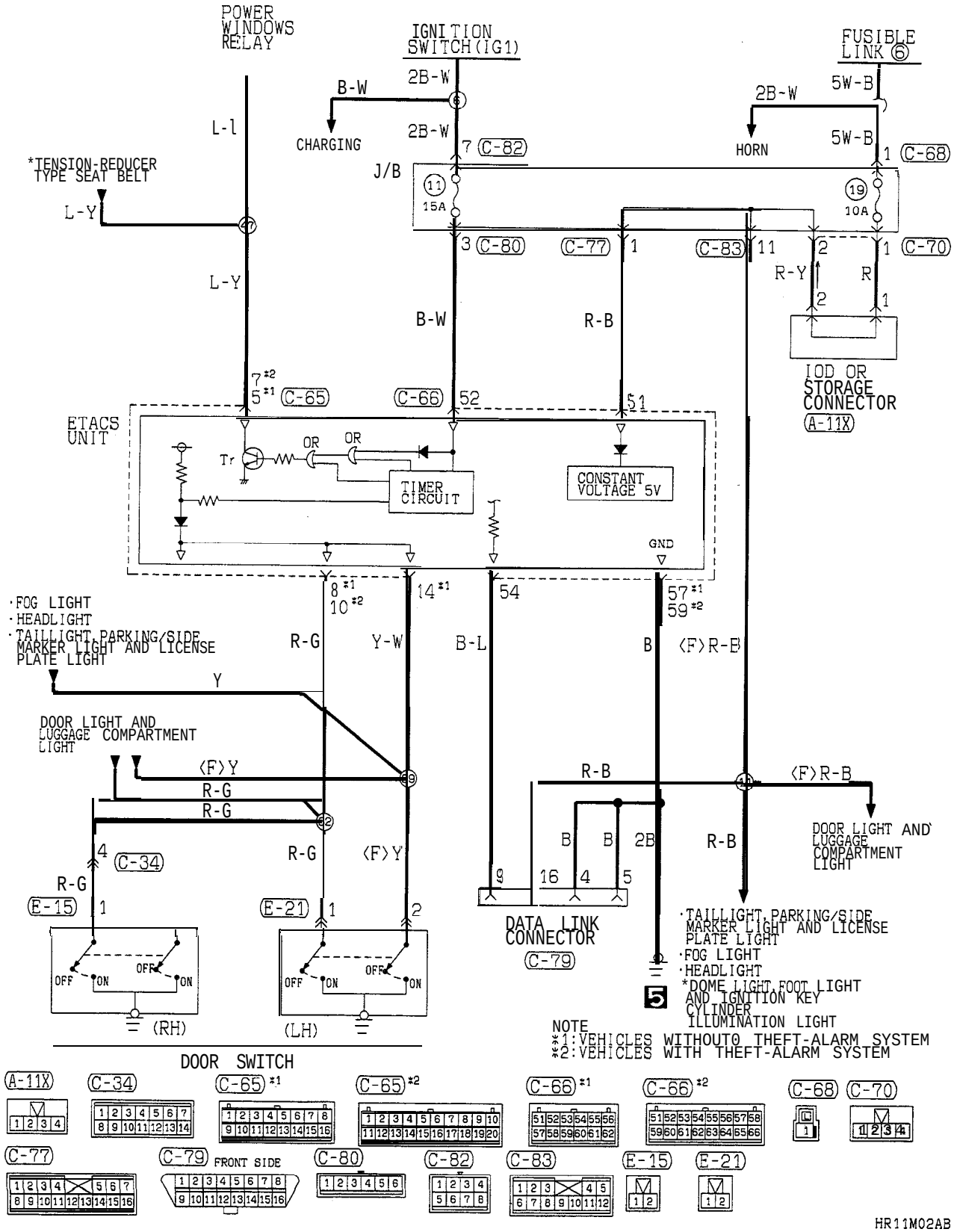

TSB Revision

POWER WINDOW CIRCUIT (FROM 1996 MODELS)

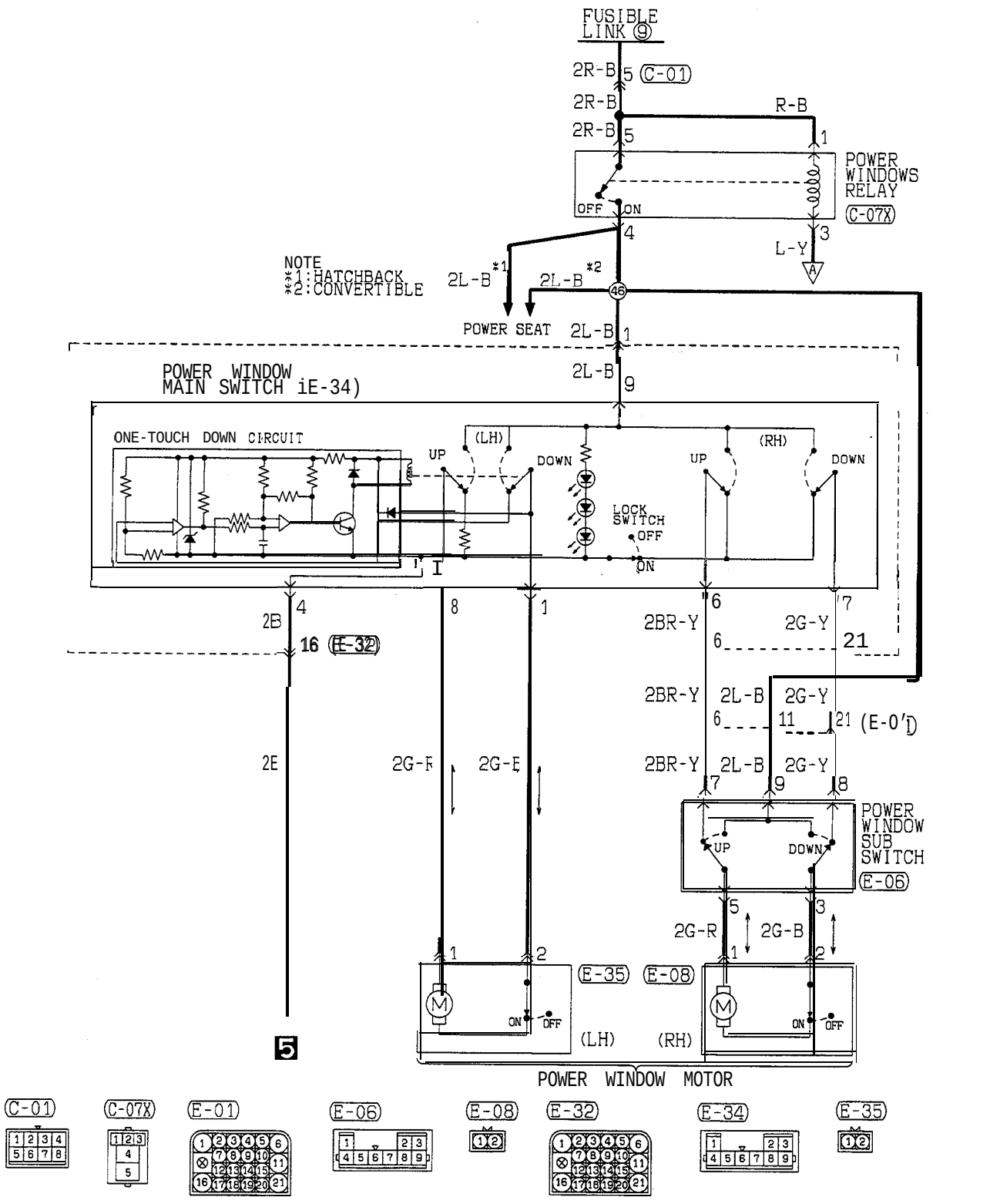

TSB Revision

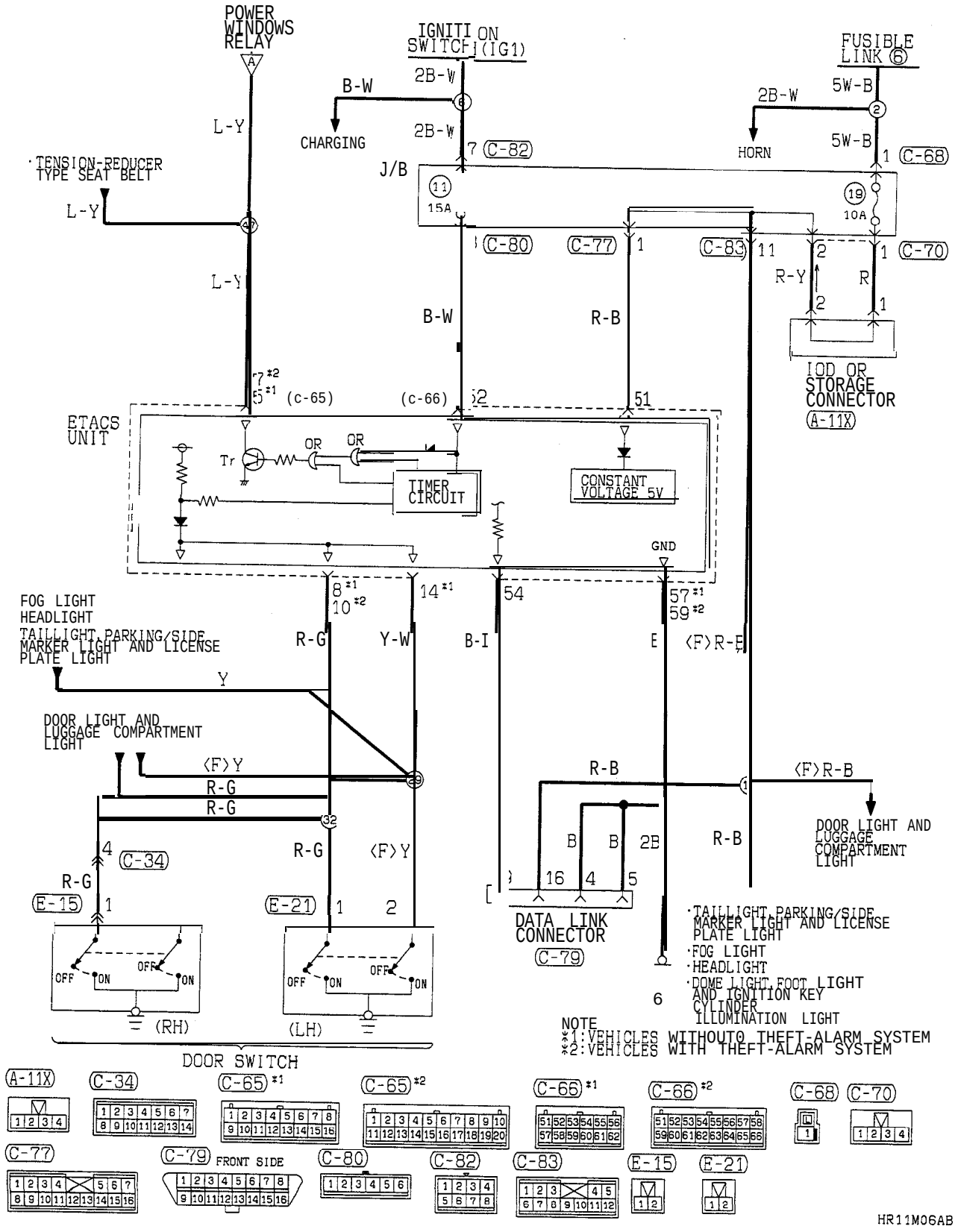
POWER WINDOWS RELAY
IGNITION SWITCH (IG1)
FUSIBLE LINK ⑥
B-W
2B-W
5W-B
CHARGING
HORN
L-Y
TENSION-REDUCER TYPE SEAT BELT
J/B
15A
10A
(C-82)
(C-68)
(C-80)
(C-77)
(C-83)
(C-70)
R-Y
R
B-W
R-B
IOD OR STORAGE CONNECTOR
(A-11X)
ETACS UNIT
(c-65)
(c-66)
Tr
OR
TIMER CIRCUIT
CONSTANT VOLTAGE 5V
GND
FOG LIGHT
HEADLIGHT
TAILLIGHT, PARKING/SIDE MARKER LIGHT AND LICENSE PLATE LIGHT
R-G
Y-W
B-I
(F)R-B
Y
DOOR LIGHT AND LUGGAGE COMPARTMENT LIGHT
(F)Y
R-G
(C-34)
(E-15)
(E-21)
OFF
ON
(RH)
(LH)
DOOR SWITCH
DATA LINK CONNECTOR
(C-79)
·TAILLIGHT, PARKING/SIDE MARKER LIGHT AND LICENSE PLATE LIGHT
·FOG LIGHT
·HEADLIGHT
·DOME LIGHT, FOOT LIGHT AND IGNITION KEY CYLINDER ILLUMINATION LIGHT
NOTE
*1:VEHICLES WITHOUT THEFT-ALARM SYSTEM
*2:VEHICLES WITH THEFT-ALARM SYSTEM
(A-11X)
(C-34)
(C-65)*1
(C-65)*2
(C-66)*1
(C-66)*2
(C-68)
(C-70)
(C-77)
(C-79)
FRONT SIDE
(C-80)
(C-82)
(C-83)
(E-15)
(E-21)
HR11M06AB

COMPONENT LOCATION

Name	Symbol	Name	Symbol
Data link connector (up to 1993 models)	A	ETACS unit	C
Data link connector (from 1994 models)	D	Power window relay	B

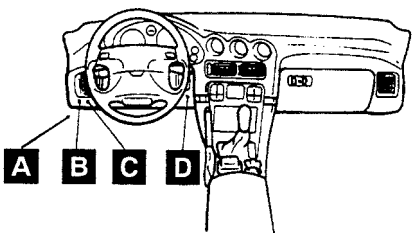

O19F0134

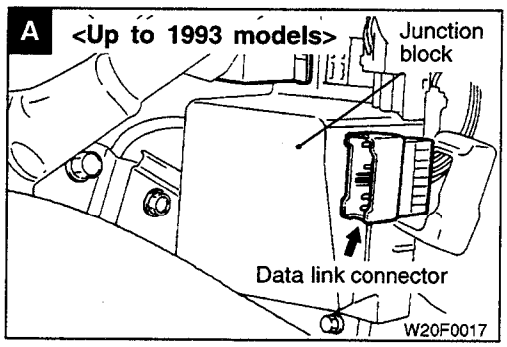

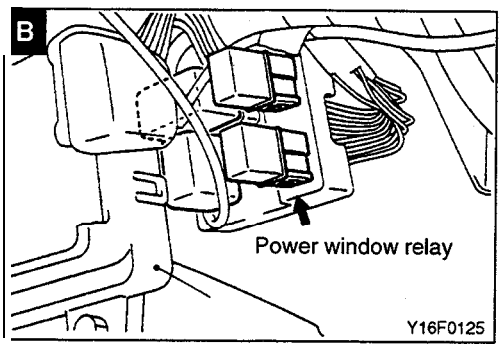

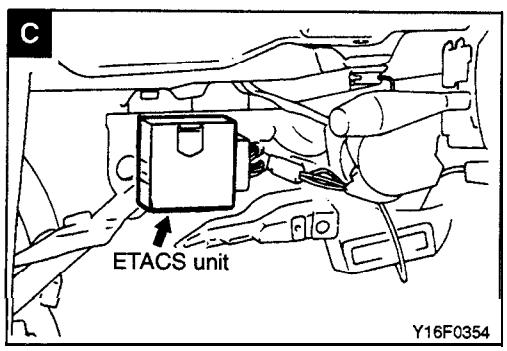

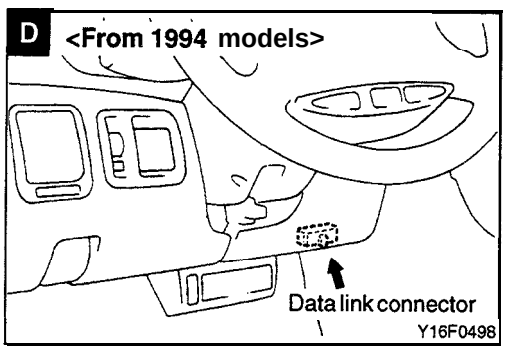

OPERATION

- Turn on the ignition switch, and the transistor Tr will be turned on by the timer circuit. This will turn on the power window relay allowing the power window to be opened and closed.
- Turn the ignition switch from on to off, and the timer circuit will be activated to keep transistor Tr on for 30 seconds allowing the power window to be opened and closed.
  Moreover, if the front door is opened, the timer circuit will stop to turn off the transistor Tr. This will prevent the window from being opened and closed.

TROUBLESHOOTING HINTS

Phenomenon		Inspection method
All door windows cannot be opened or closed.		• Check fusible link No. 9. • Check the power-window relay. • Check the power-window main switch.
One of the door windows cannot be opened or closed.	Neither of the power-window switches (main or sub) operates	• Check the power-window main switch. • Check the power-window motor for the power window that does not operate.
	Either the power-window main switch or sub switch does not operate.	• Check the power-window switch for the power window that does not operate.
The one-touch down switch function only does not operate.		• Replace the power-window main switch.
The power windows do not operate when the ignition switch is at the "ON" position.		• Check the ignition switch input signal. (Refer to GROUP 42–Troubleshooting.) • Check the ignition switch. (Refer to GROUP 54–Ignition Switch.) • Checkthepowerwindow relay. (Refer to GROUP 42–Power Window)
The power windows can be opened and closed immediately after ignition switch is switched "OFF", but the power window operation does not stop if a front door is opened within 30 seconds.		• Check the front door switch input signal. (Refer to GROUP 42–Troubleshooting.) • Check the front door switch. (Refer to GROUP 42–Door Assembly.)
The opening and closing operations of the power windows are possible after the timer operation time has elapsed when the ignition switch is set to the "OFF" position.		• Check the power window relay. (Refer to GROUP 42–Power Window.)

CENTRAL DOOR LOCKING CIRCUIT (UP TO 1993 MODELS)

(Vehicles without keyless entry system)

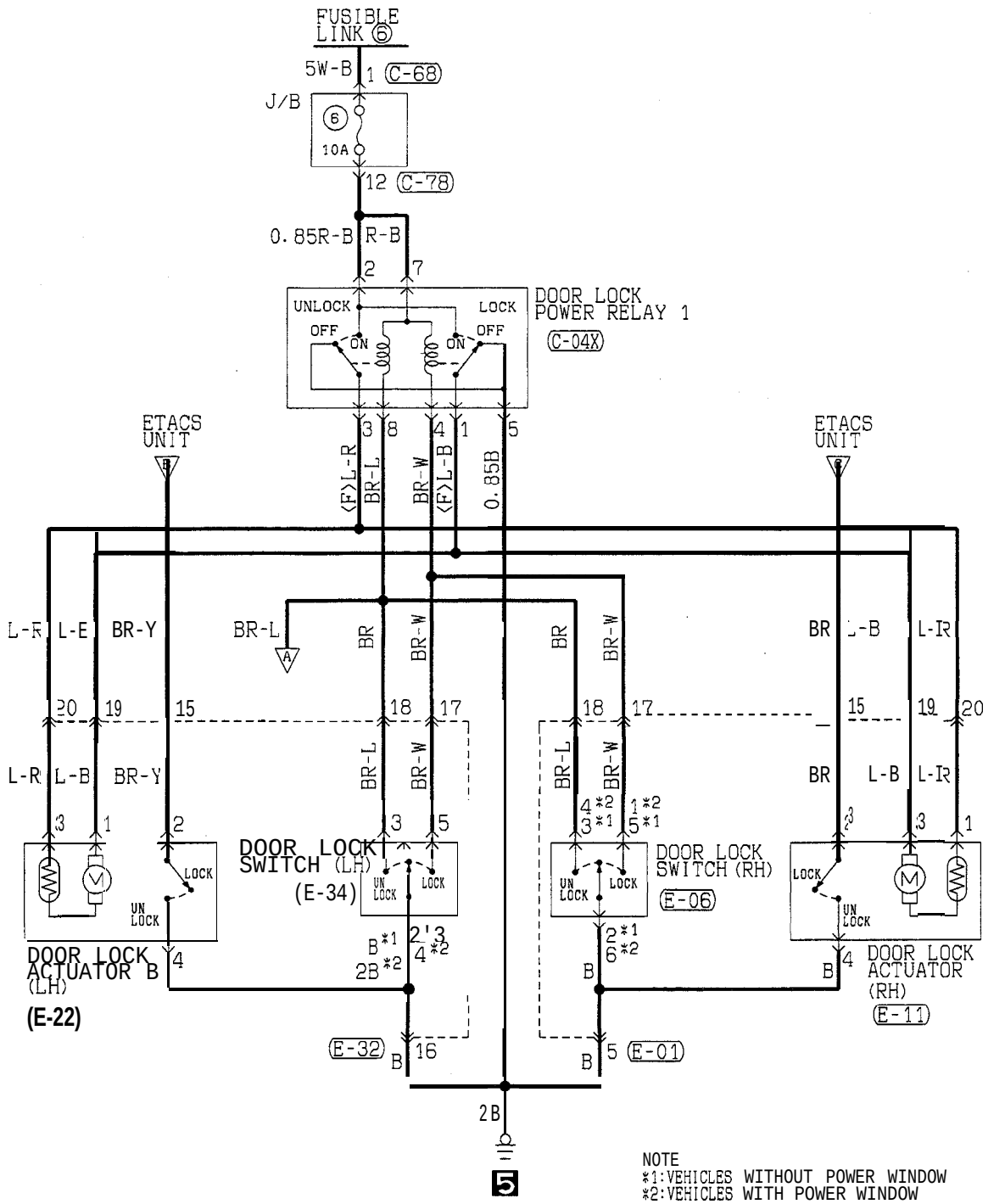

TSB Revision

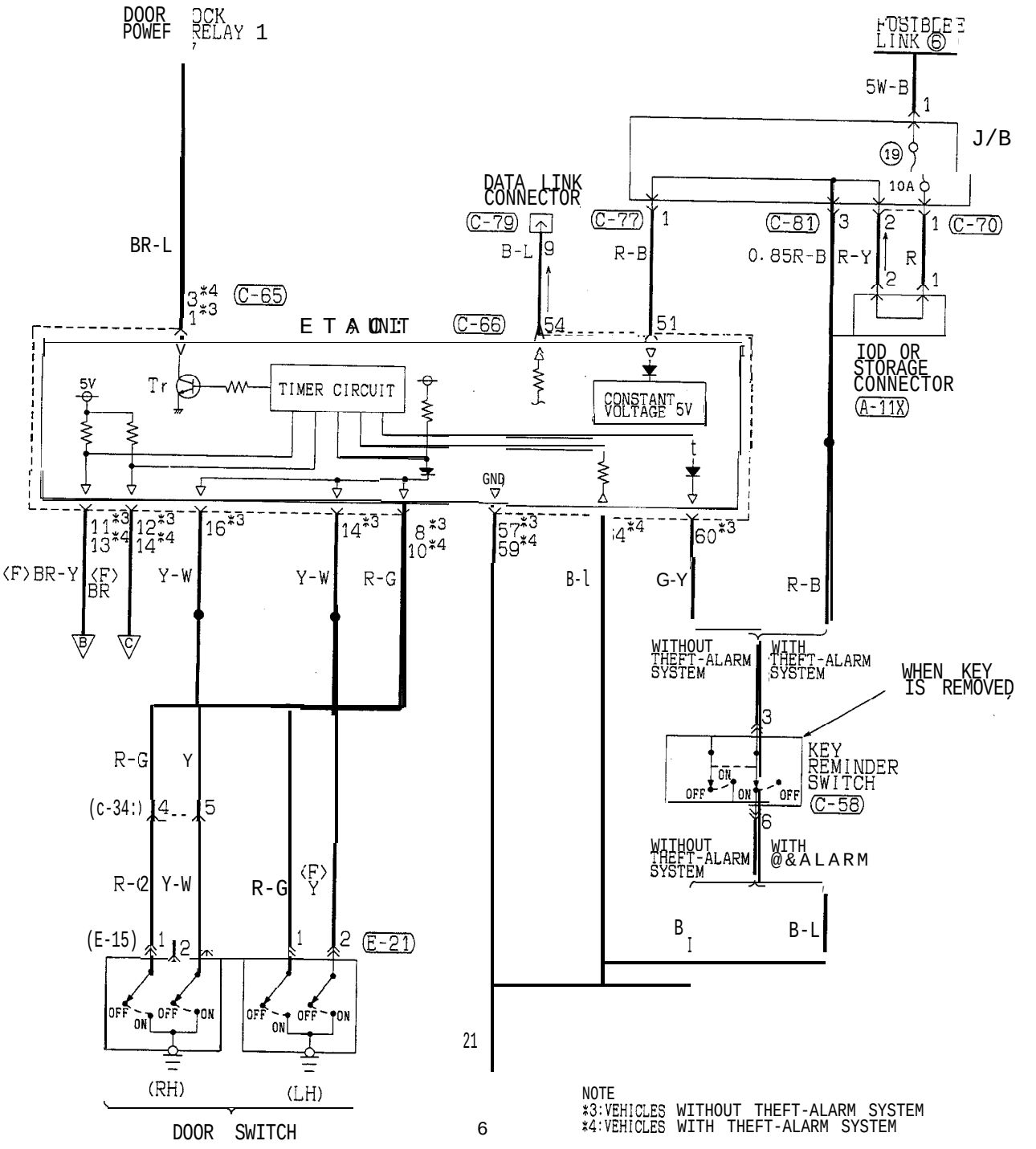

TSB Revision

CENTRAL DOOR LOCKING CIRCUIT (UP TO 1993 MODELS)

(Vehicles with keyless entry system)

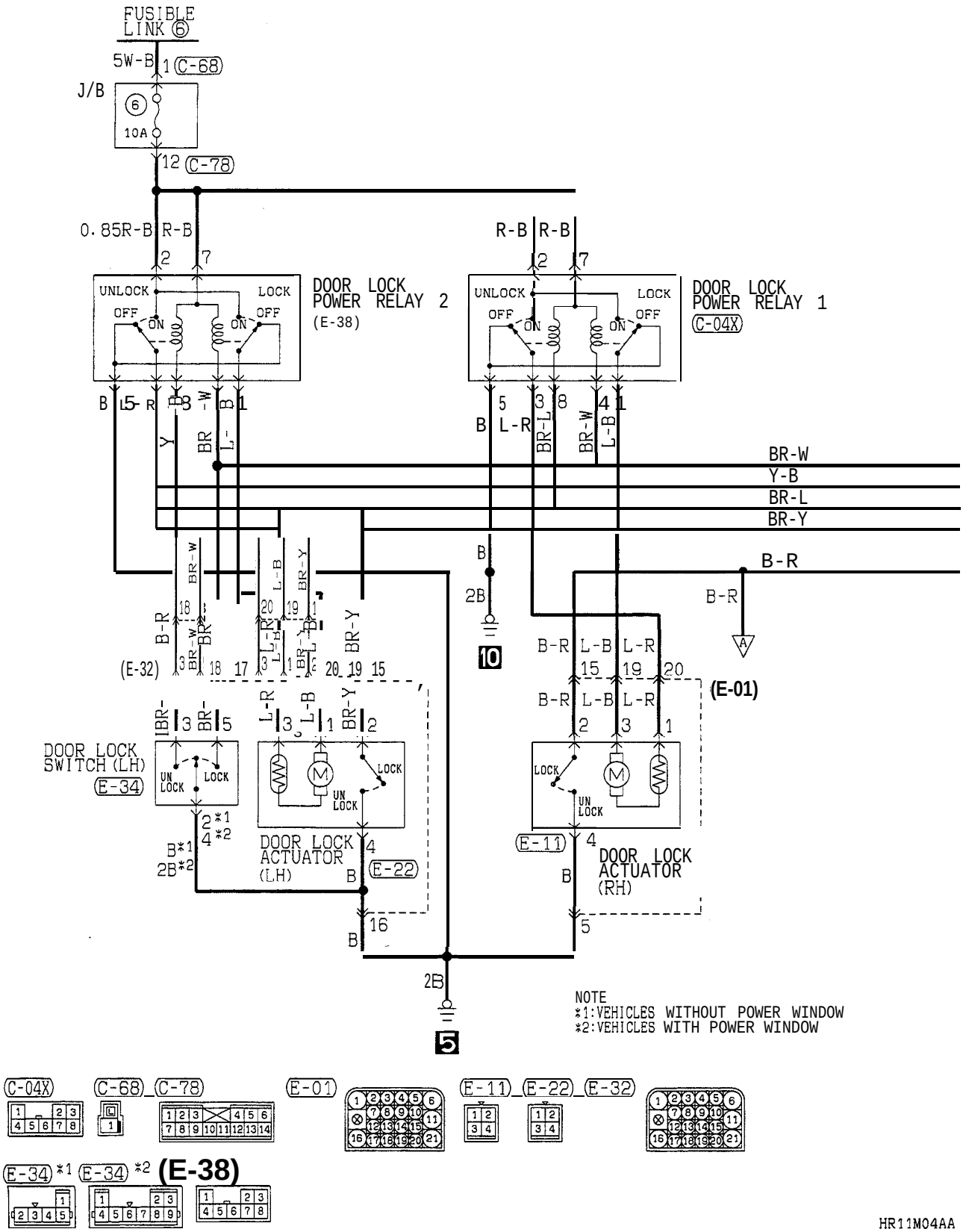

HR11M04AA

TSB Revision

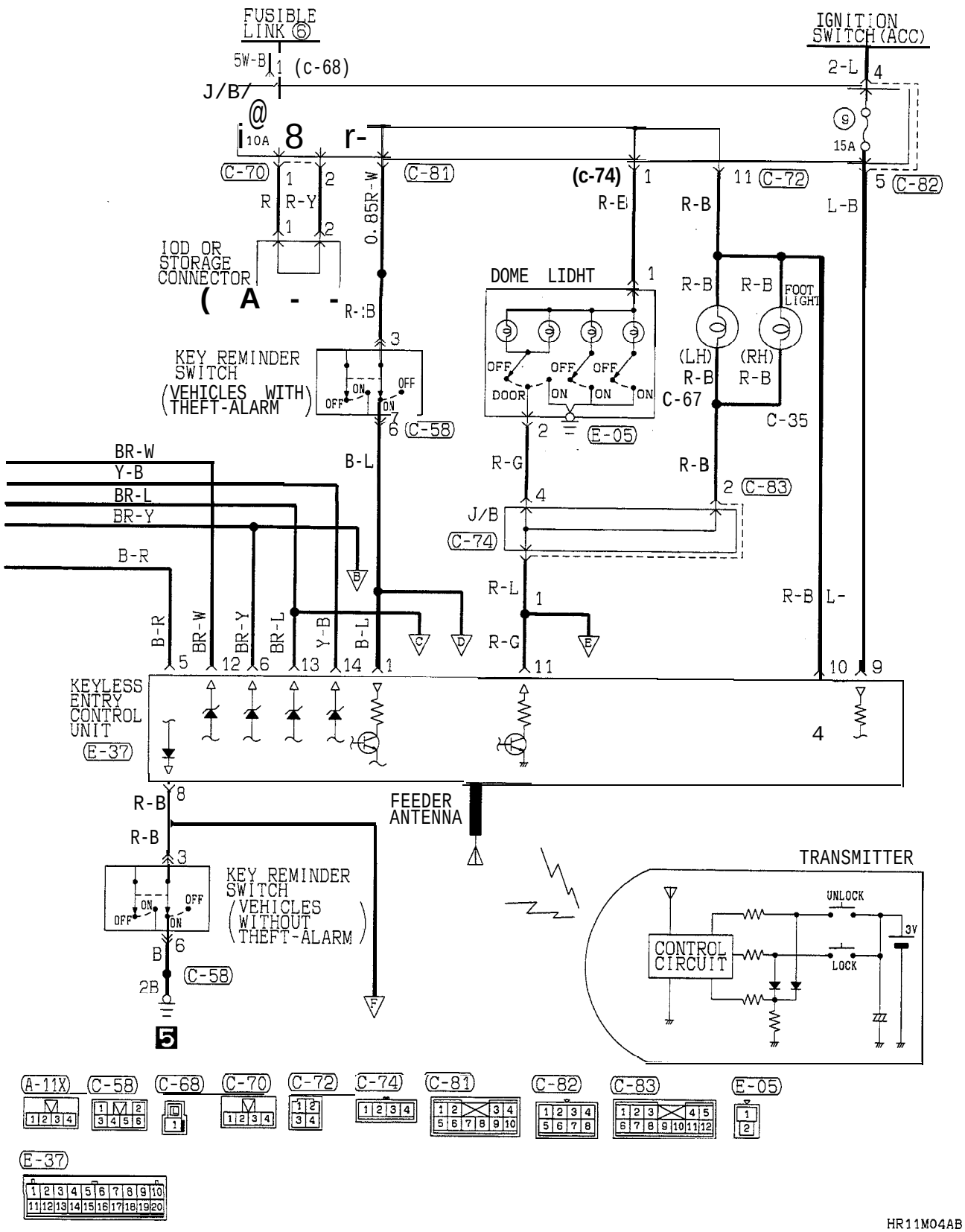
FUSIBLE LINK ⑥
5W-B
(c-68)
J/B
10A
IGNITION SWITCH (ACC)
2-L
15A
(C-70)
(C-81)
(c-74)
(C-72)
(C-82)
R
R-Y
0.85R-W
R-E
R-B
L-B
IOD OR STORAGE CONNECTOR
DOME LIDHT
FOOT LIGHT
(LH)
(RH)
KEY REMINDER SWITCH (VEHICLES WITH THEFT-ALARM)
OFF
ON
DOOR
C-67
C-35
(C-58)
(E-05)
(C-83)
BR-W
Y-B
BR-L
BR-Y
B-R
B-L
R-G
J/B
(C-74)
R-L
KEYLESS ENTRY CONTROL UNIT
(E-37)
FEEDER ANTENNA
TRANSMITTER
KEY REMINDER SWITCH (VEHICLES WITHOUT THEFT-ALARM)
CONTROL CIRCUIT
UNLOCK
LOCK
3V
2B
(A-11X)
(C-58)
(C-68)
(C-70)
(C-72)
(C-74)
(C-81)
(C-82)
(C-83)
(E-05)
(E-37)
HR11M04AB

CENTRAL DOOR LOCKING CIRCUIT (UP TO 1993 models) (Vehicles with keyless entry system) (CONTINUED)

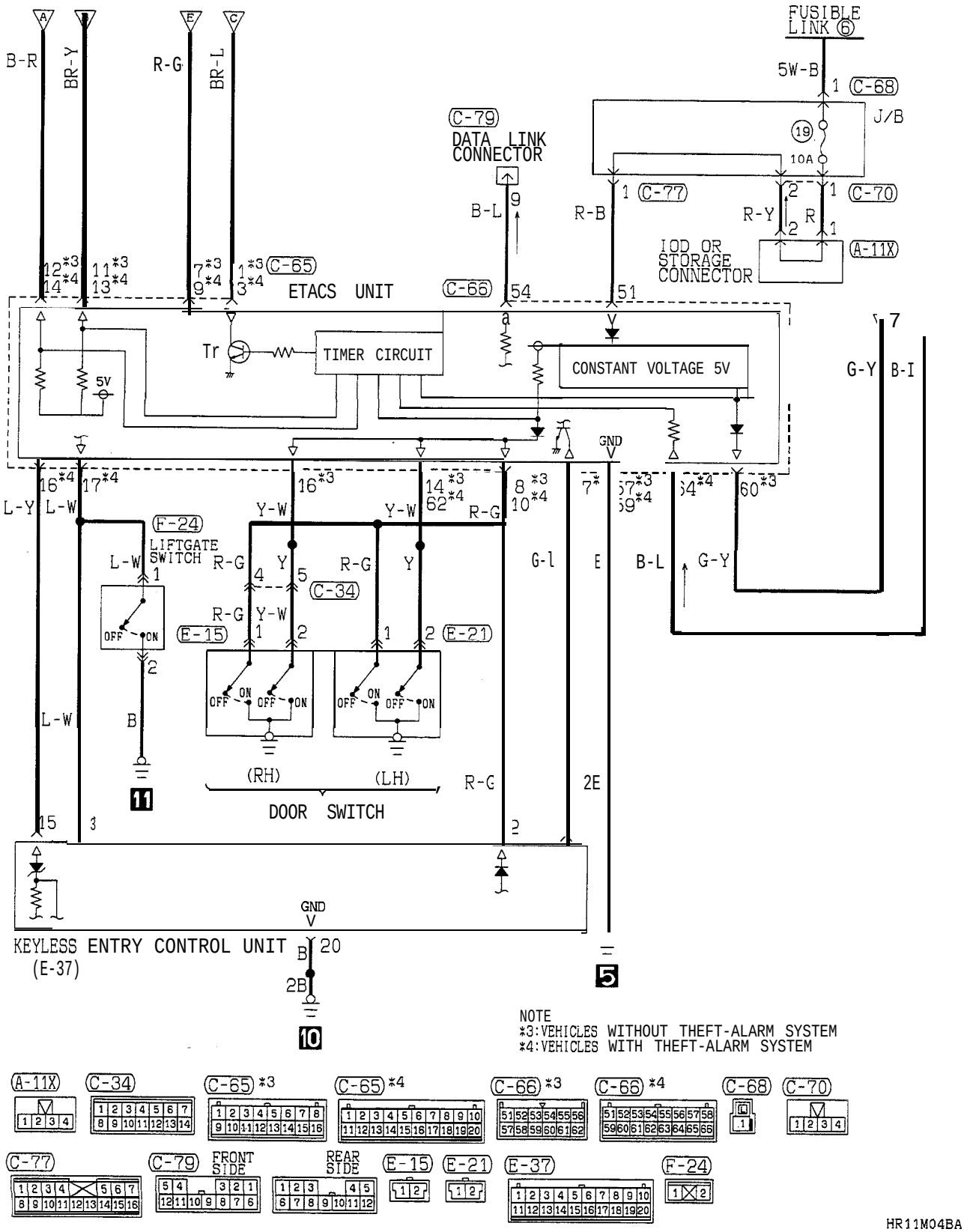

TSB Revision

NOTES

CENTRAL DOOR LOCKING CIRCUIT (1994, 1995 MODELS)

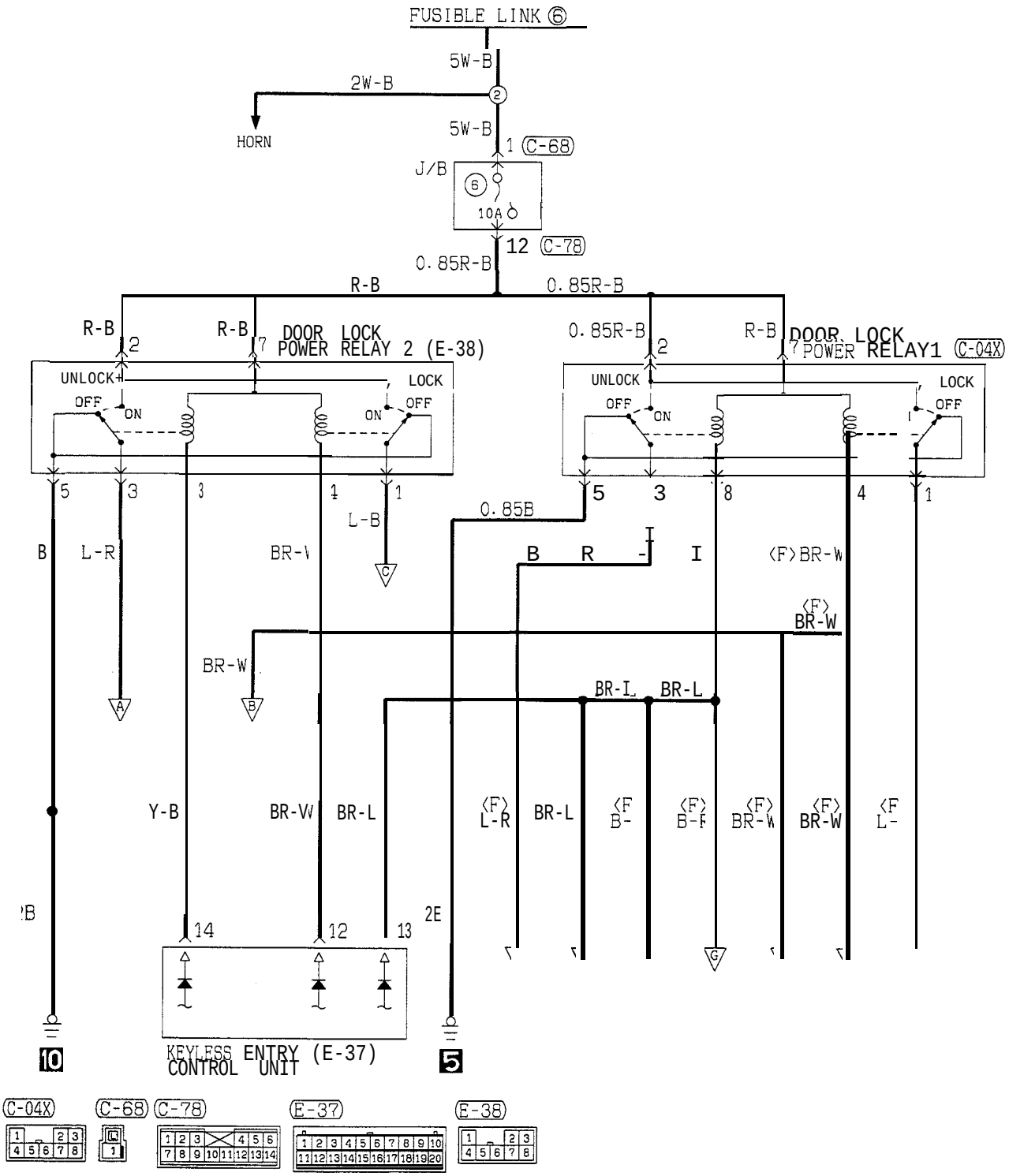

HR11M05AA

TSB Revision

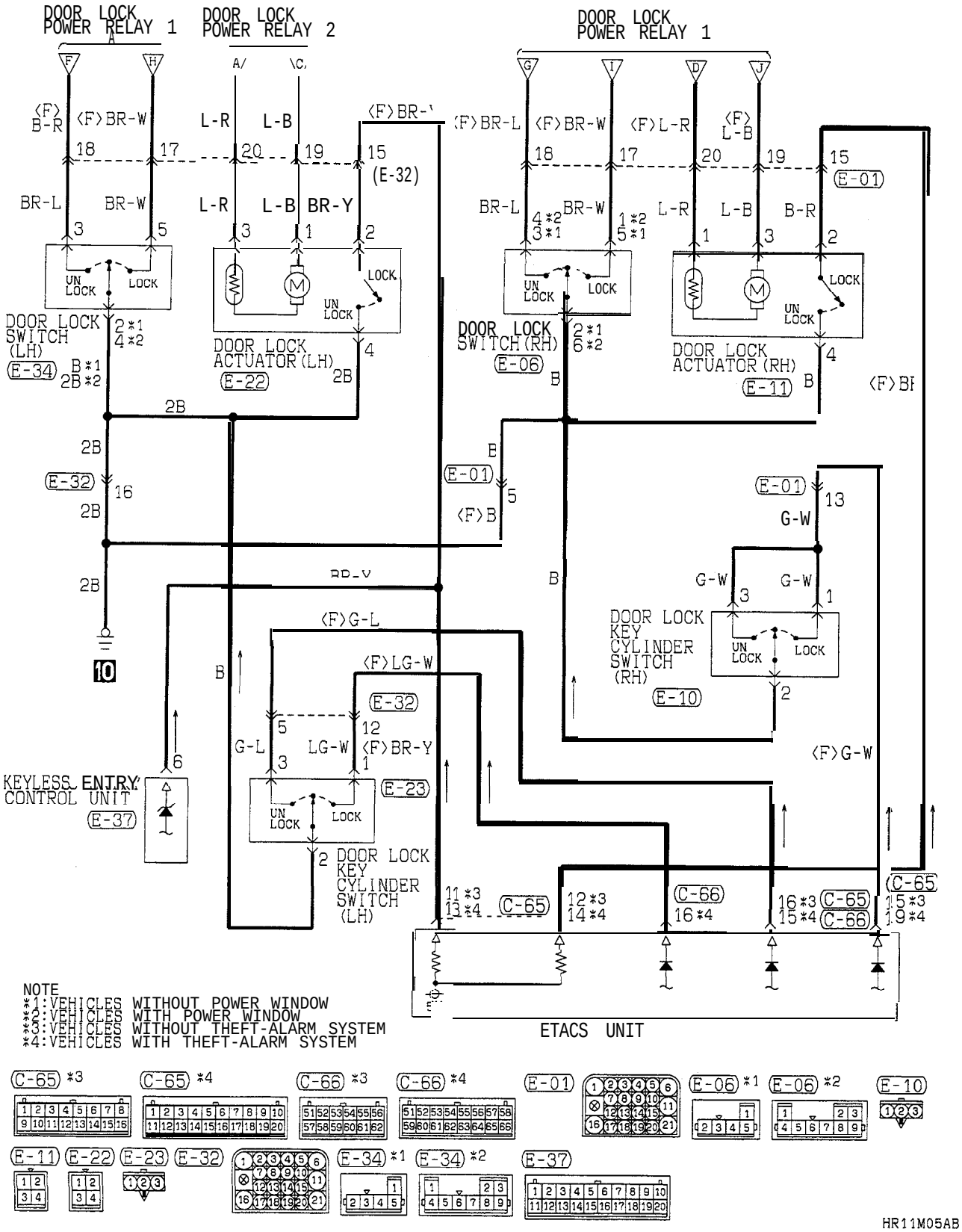
DOOR LOCK POWER RELAY 1
DOOR LOCK POWER RELAY 2
DOOR LOCK POWER RELAY 1
DOOR LOCK SWITCH (LH)
(E-34)
DOOR LOCK ACTUATOR (LH)
(E-22)
DOOR LOCK SWITCH (RH)
(E-06)
DOOR LOCK ACTUATOR (RH)
(E-11)
DOOR LOCK KEY CYLINDER SWITCH (RH)
(E-10)
DOOR LOCK KEY CYLINDER SWITCH (LH)
(E-23)
KEYLESS ENTRY CONTROL UNIT
(E-37)
ETACS UNIT
UN LOCK
LOCK
NOTE
*1:VEHICLES WITHOUT POWER WINDOW
*2:VEHICLES WITH POWER WINDOW
*3:VEHICLES WITHOUT THEFT-ALARM SYSTEM
*4:VEHICLES WITH THEFT-ALARM SYSTEM
HR11M05AB

CENTRAL DOOR LOCKING CIRCUIT (1994, 1995 MODELS) (CONTINUED)

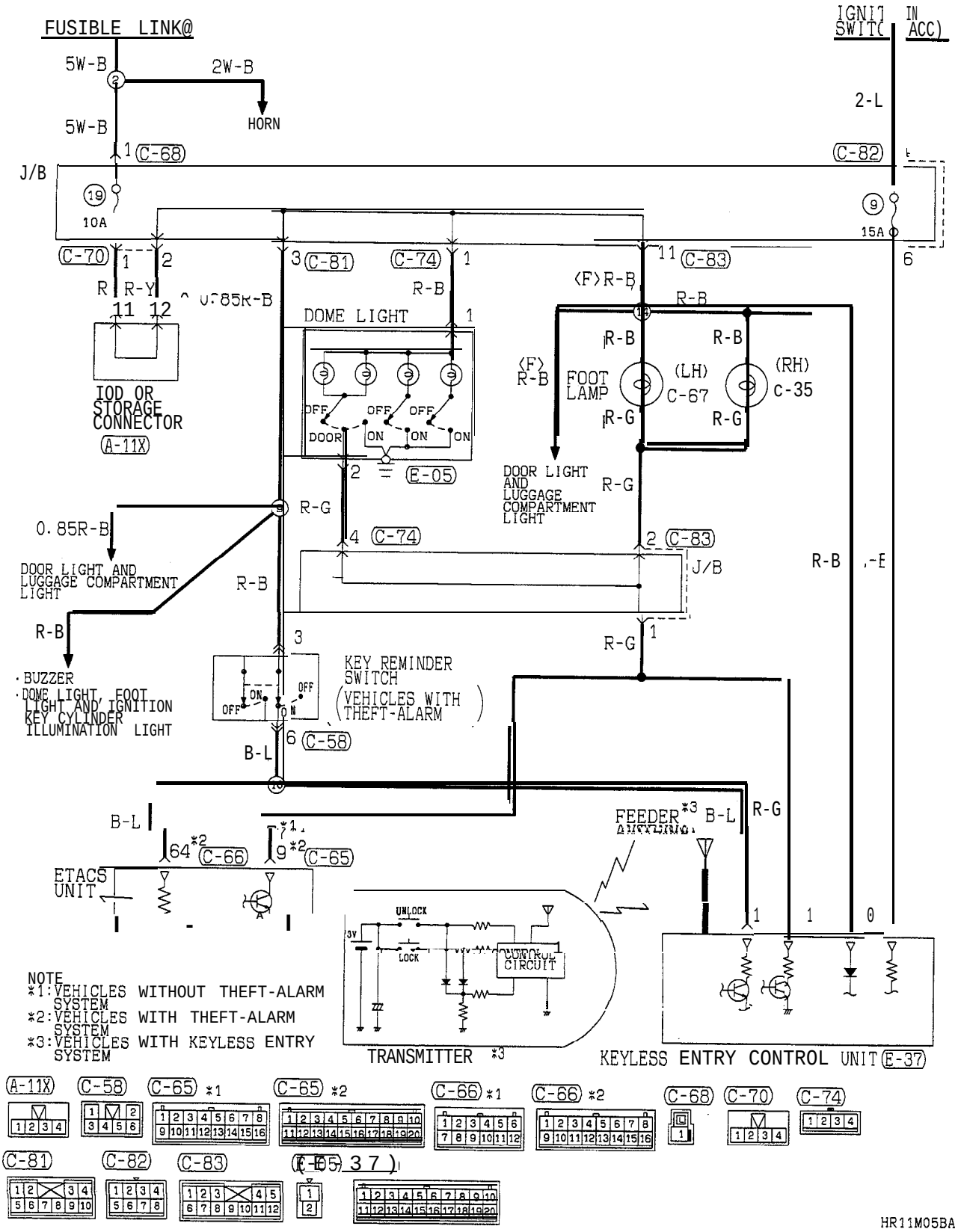

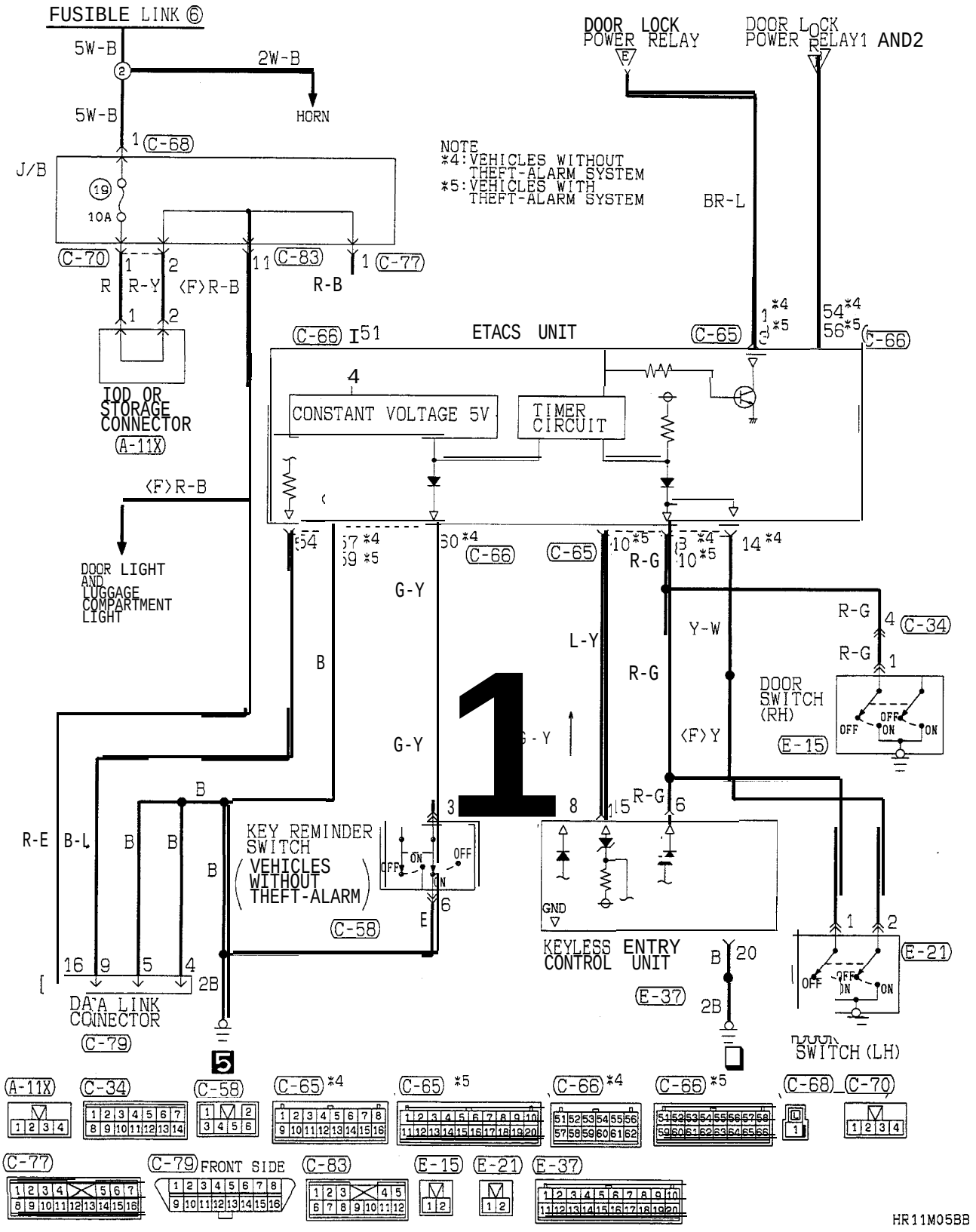

TSB Revision

CENTRAL DOOR LOCKING CIRCUIT (FROM 1996 MODELS)

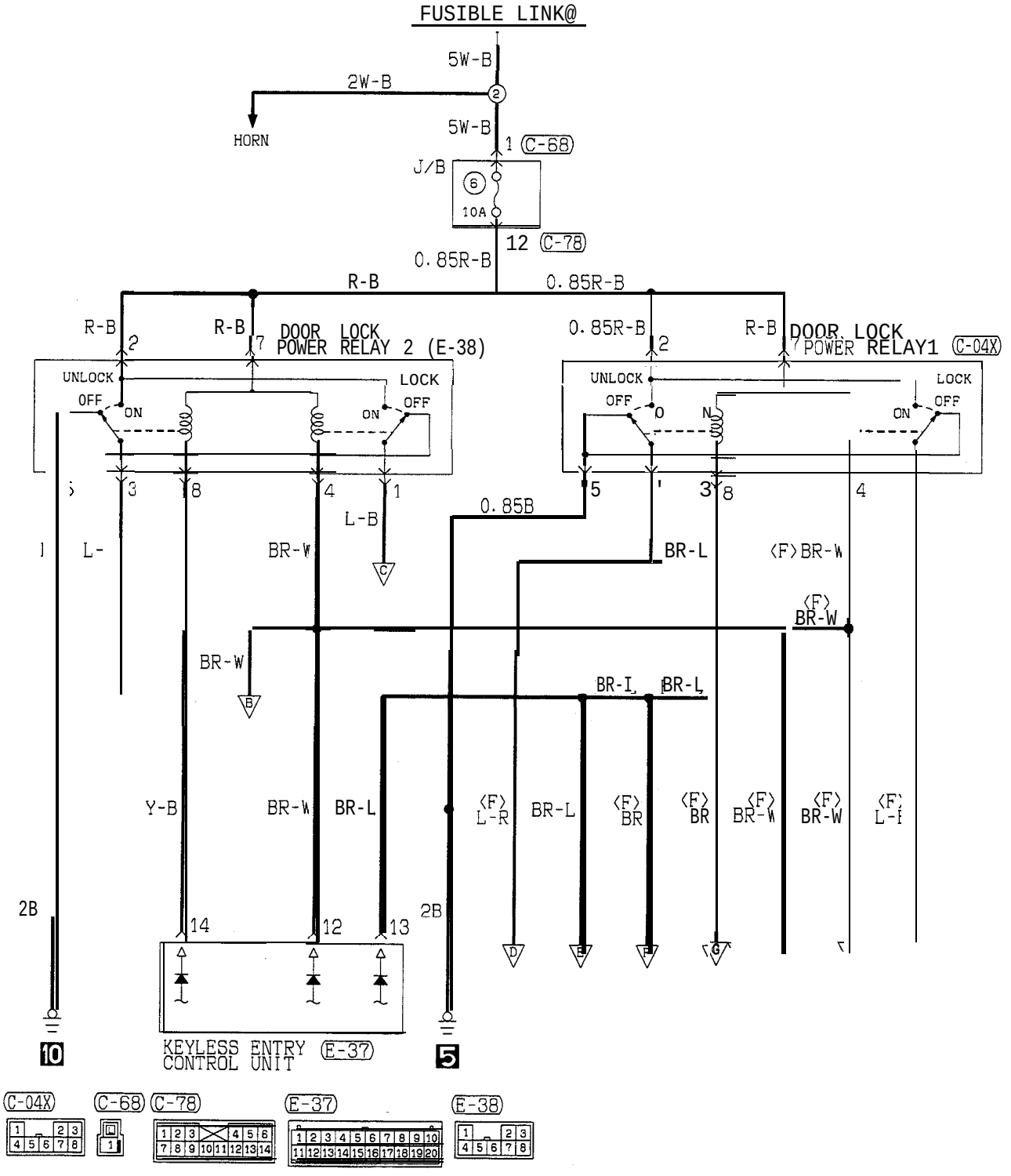

HR11M07AA

TSB Revision

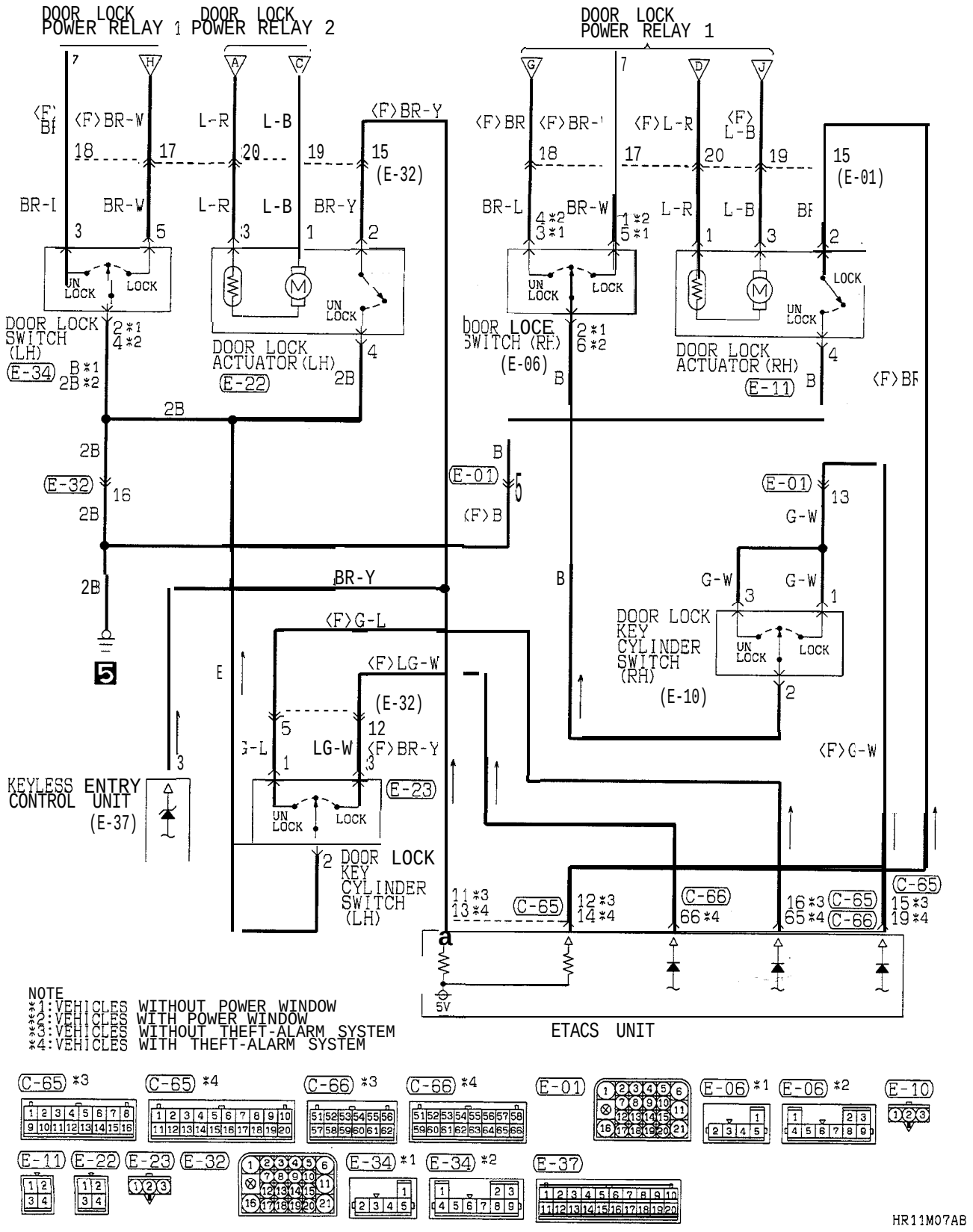

NOTE
*1:VEHICLES WITHOUT POWER WINDOW
*2:VEHICLES WITH POWER WINDOW
*3:VEHICLES WITHOUT THEFT-ALARM SYSTEM
*4:VEHICLES WITH THEFT-ALARM SYSTEM

HR11M07AB

CENTRAL DOOR LOCKING CIRCUIT (FROM 1996 MODELS) (CONTINUED)

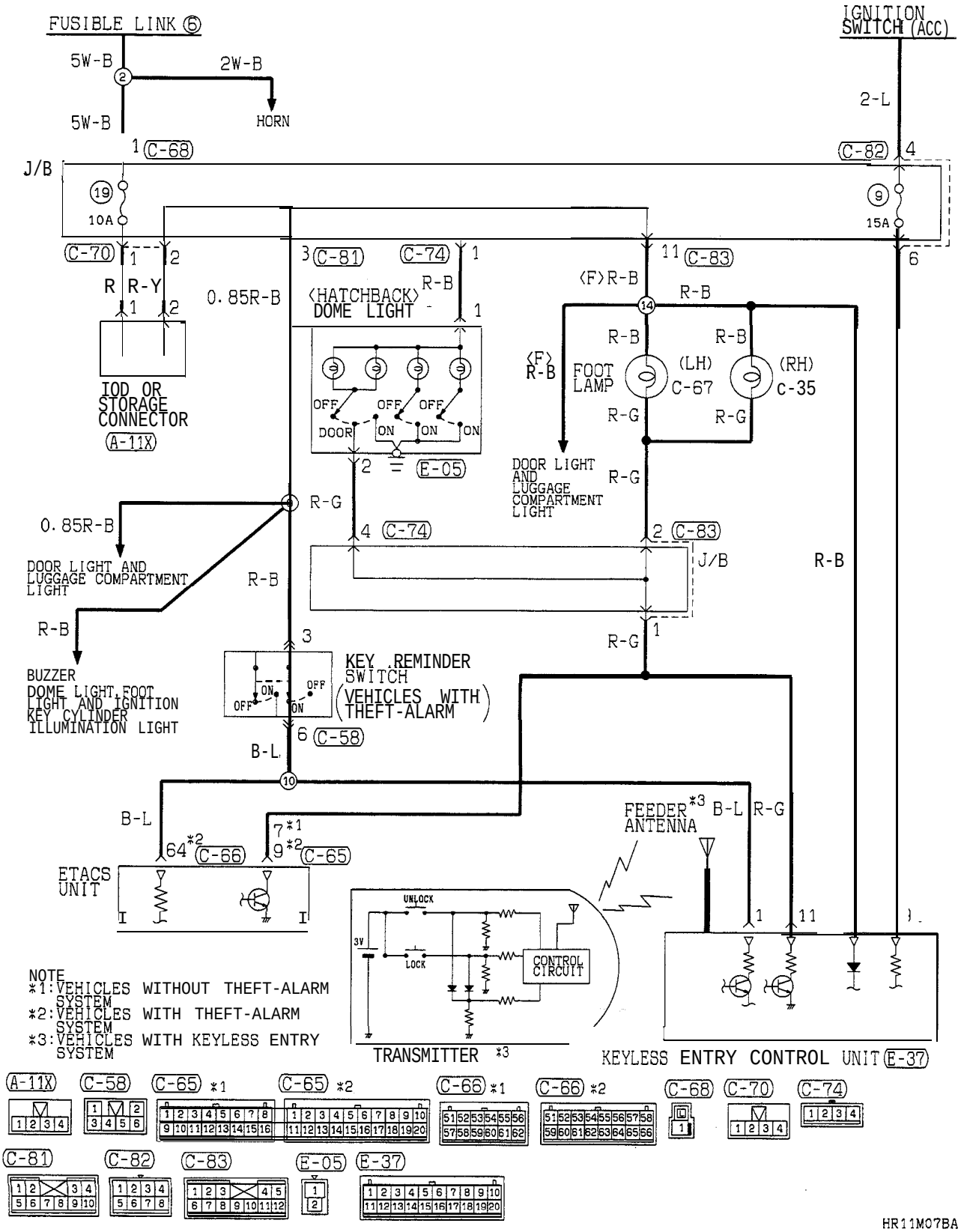

TSB Revision

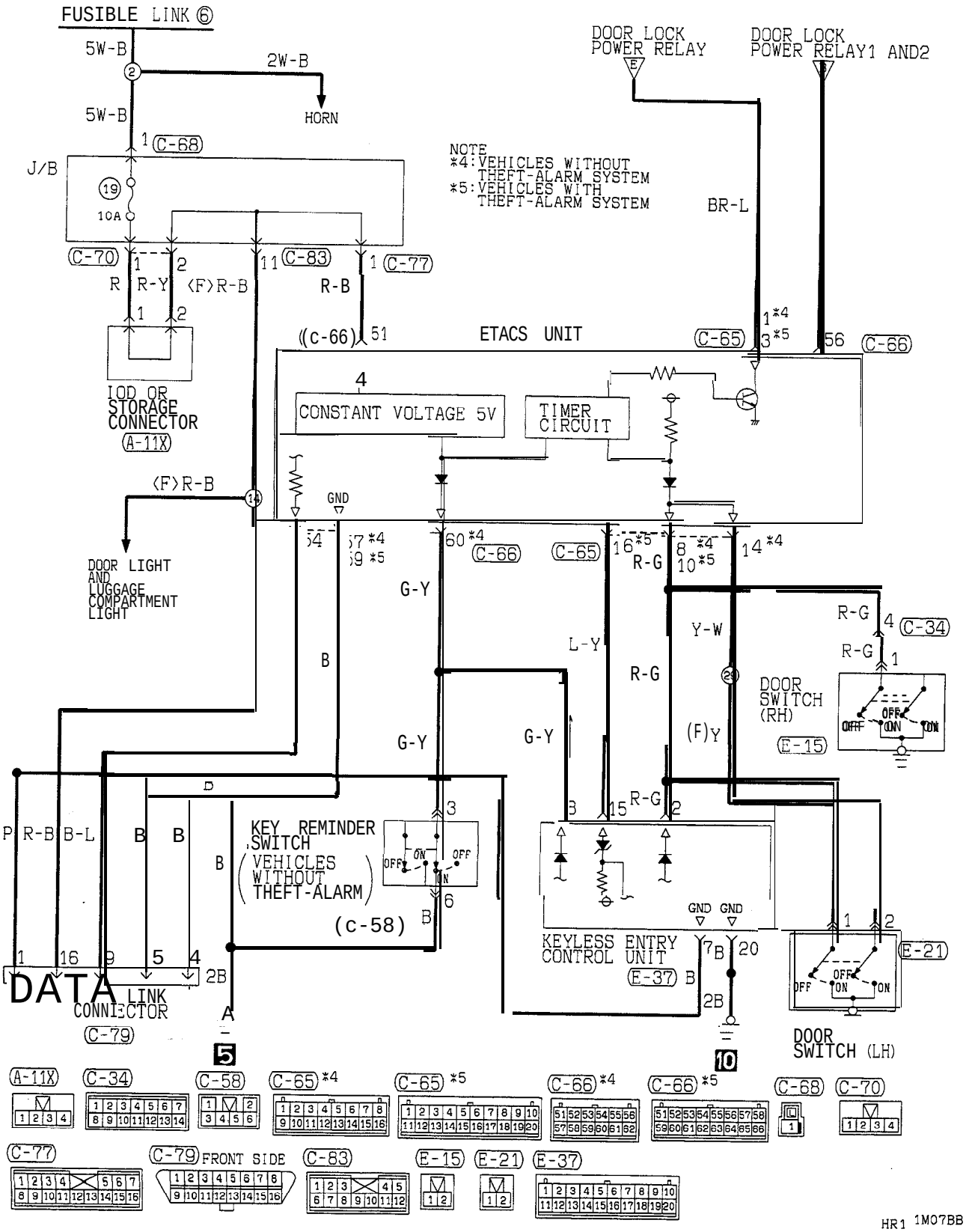

TSB Revision

COMPONENT LOCATION

Name	Symbol	Name	Symbol
Data link connector (from 1994 models)	D	Door lock power relay 2 (Concerning the vehicles up to 1993 models, only for the vehicles equipped with keyless entry system.)	F
Data link connector (up to 1993 models)	A	ETACS unit	C
Door lock actuator	E	Keyless entry control unit	F
Door lock power relay 1	B		

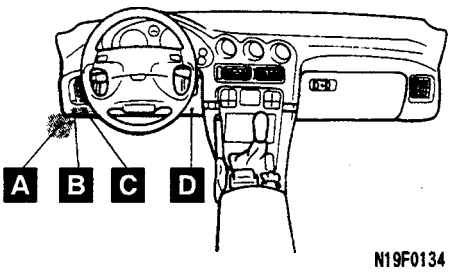

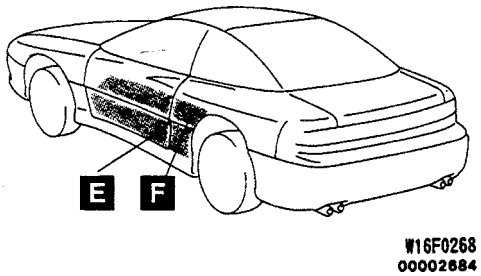

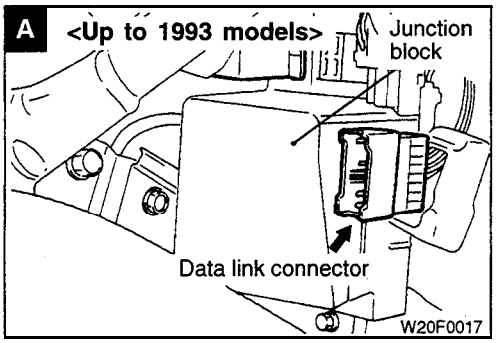

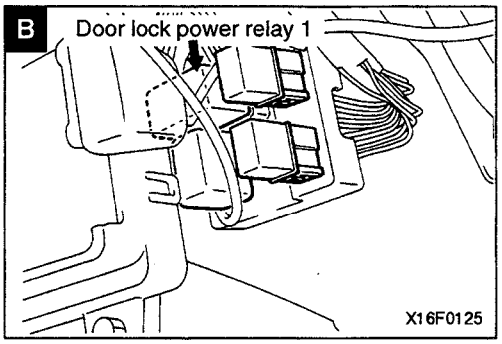

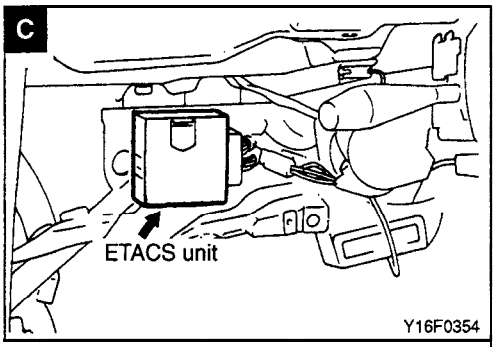

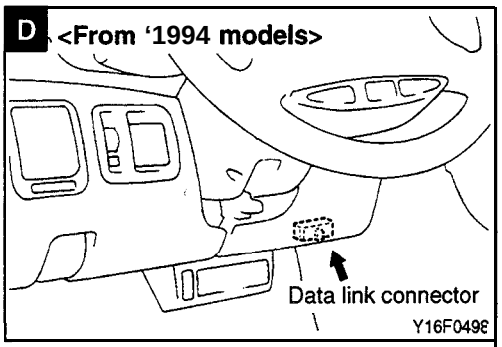

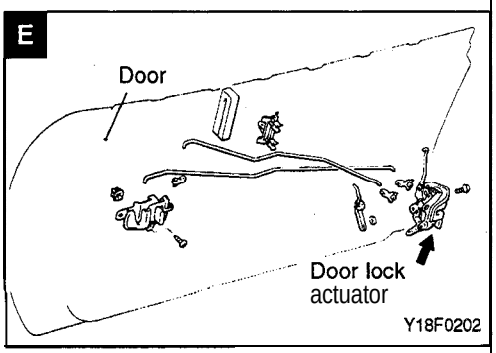

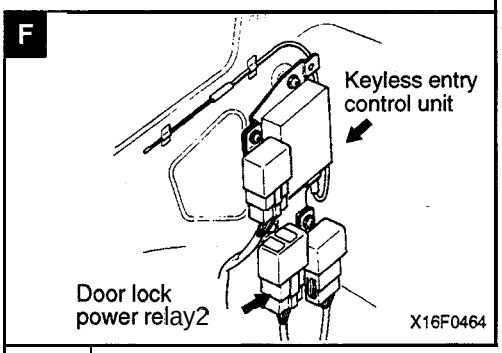

OPERATION

<Vehicles without keyless entry system>

- When the door lock switch is set to the LOCK side (or UNLOCK side), the LOCK side (or UNLOCK side) of the door lock relay is turned ON and the door actuators of all doors operate.
- If the driver seat side door (or assistant seat side door) is opened and the driver seat side inside lock knob (or assistant seat side inside lock knob) is locked with the key inserted in the ignition switch, the ETACS unit grounds the unlock side circuit of the door lock relay to unlock all doors. This way, failure to remove the key is prevented.

<Vehicles with keyless entry system>

- With the driver's and front passenger's doors unlocked, press the LOCK switch of the transmitter, and the door lock signal output (0 V) will be sent from the keyless entry control unit terminal No. 12 closing the door lock power relays 1 and 2 to lock the driver's and front passenger's doors.
- While the R.H. and L.H. doors are in the locked state, press the UNLOCK switch of the transmitter once, and the DOOR UNLOCK switch signal (0 V) will be sent from the keyless entry control unit terminal No. 14 closing the door lock power relay 2 to unlock the driver's door.
- Under the above-mentioned conditions, further press the UNLOCK switch of the transmitter, and the DOOR UNLOCK signal output (0 V) will be sent from the keyless entry control unit terminal No. 13 closing the door lock power relay 1 to lock the front passenger's door.
- When the keyless entry system is operated to turn the driver's door lock switch from the UNLOCK position to the LOCK position, the dome light/foot light blinking signal output (system voltage) will be sent twice from the keyless entry control unit terminal No. 11 when the door lock switch is turned from the LOCK position to the UNLOCK position, the lighting signal output (0 V) will be provided for approx. 3 seconds.

NOTE

The dome light winks or comes on when the dome light switch is in the DOOR interlock position. However, the dome light does not wink while it is ON for 6 seconds after closing the door by ETACS function.

Besides the above-mentioned operations, the keyless entry control unit has the following functions.

- If any door is not opened or closed within 30 seconds from unlocking the door by means of the keyless entry system, the door is automatically locked. In addition, if the cryptographic code other than the code stored in the receiver memory is received 30 times in one minute continuously, operation of the unit is suspended for 10 minutes.
- Operation is also suspended if the ignition key remains inserted (key reminder switch: OFF) and either door is left open (door switch: ON).

TROUBLESHOOTING HINTS

<Vehicles without keyless entry system>

Phenomenon	Inspection method
One of the door lock actuators fails to operate.	• Check the door actuator which fails to operate.
No unlock operation can be made by pressing door lock knob after fulfilment of following conditions. • Insertion of key in ignition switch (key reminder switch OFF) • Opening of door (door switch ON)	• Check the key reminder switch input signal. • Check the key reminder switch. (Refer to GROUP 54–Ignition Switch.) • Check the front door switch input signal. • Check the front door switch. (Refer to GROUP 42–Door Assembly)

<Vehicles with keyless entry system>

- The indicator does not blink after pressing the transmission switch of the transmitter.
  1) Check or replace the battery. (Refer to GROUP 42–Keyless Entry System.)
  2) Replace the transmitter.
- Transmitted wave is being sent from the transmitter (indicator is blinking), but the system does not operate.
  1) Check the cryptographic code registering method. (Refer to GROUP 42–Keyless Entry System.)
  2) Check the keyless entry control unit terminal voltage. (Refer to GROUP 42–Troubleshooting.)
  3) Check the coaxial cable of antenna and the ground wire for connection.
- Only R.H. or L.H. door can be locked or unlocked.
  1) Check the door lock power relay 1 (for front passenger's door) or door lock power relay 2 (for driver's door). (Refer to GROUP 42–Central Door Locking System.)
  2) Check the keyless entry control unit terminal voltage. (Refer to GROUP 42–Troubleshooting.)
- R.H. and L.H. doors can be locked and unlocked by the transmitter but the dome light and foot light do not blink or come on. (Interlocked lighting of the dome light and foot light by means of the dome light switch or door opening and closing is normal).
  1) Check the keyless entry control unit terminal voltage (Refer to GROUP 42–Troubleshooting.)
  2) Check the harness.

NOTE

- Perform this check when replacement of the transmitter and/or keyless entry control unit or faulty storage of cryptographic code has been made.

HEATER CIRCUIT (UP TO 1995 MODELS)

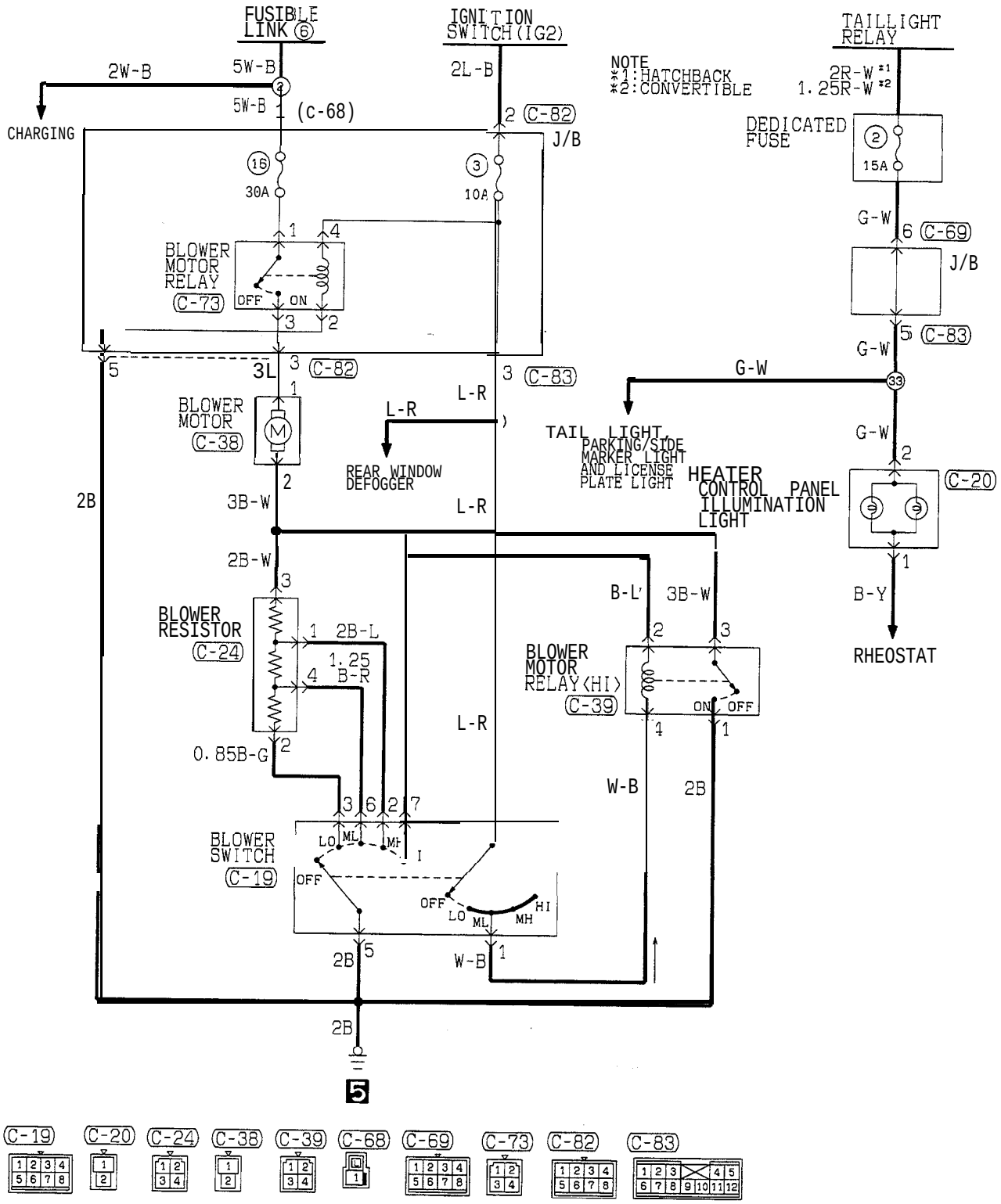

HR12M00AA

HEATER CIRCUIT (FROM 1996 MODELS)

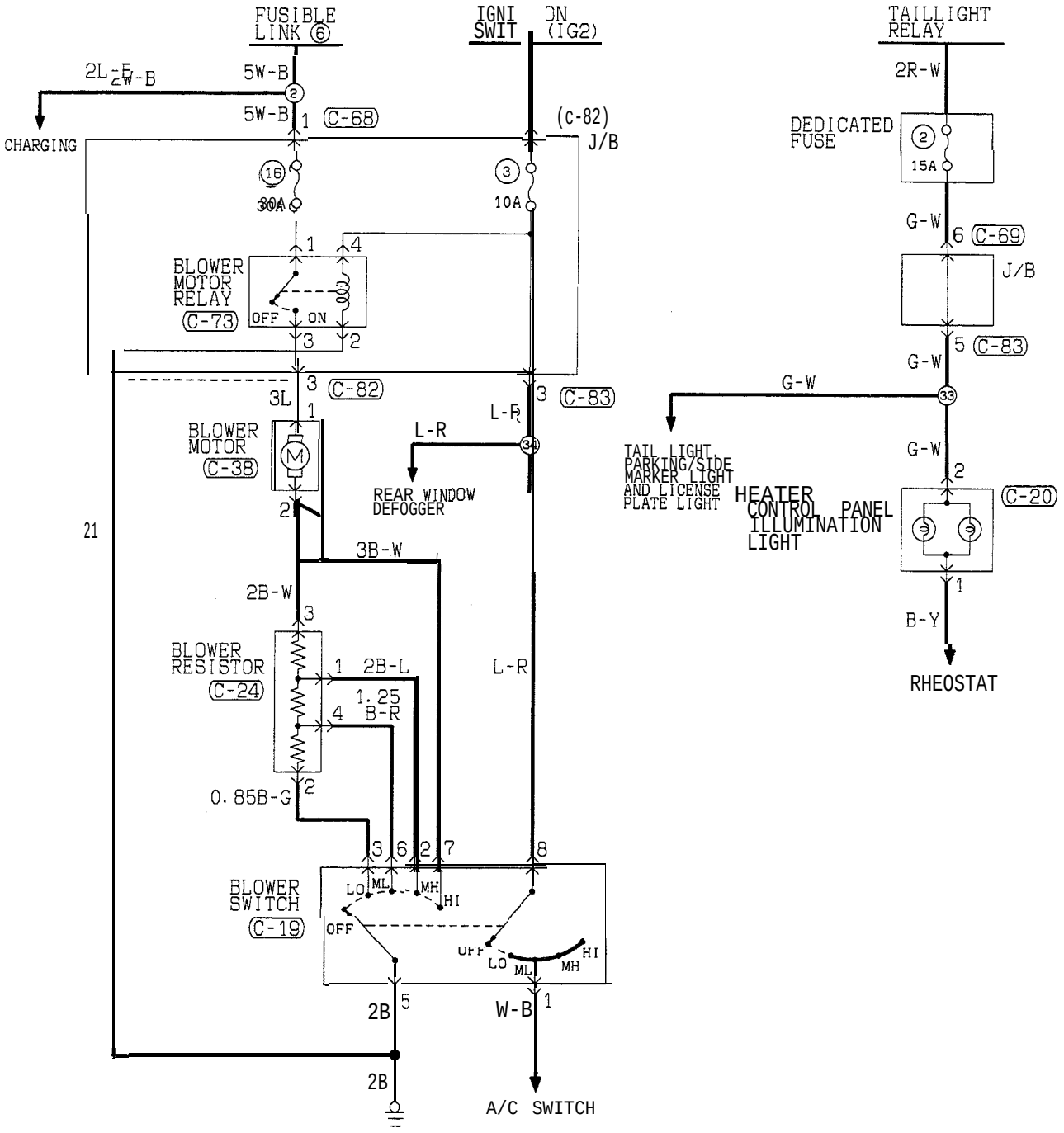

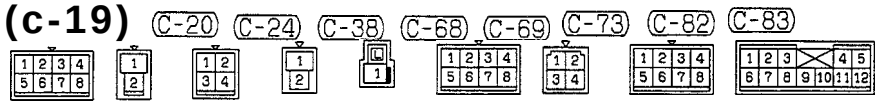

HR12M09AA

TSB Revision

COMPONENT LOCATION

Name	Symbol	Name	Symbol
Blower motor relay	A	Blower resistor	B
Blower motor relay (HI) (Up to 1995 models)	C		

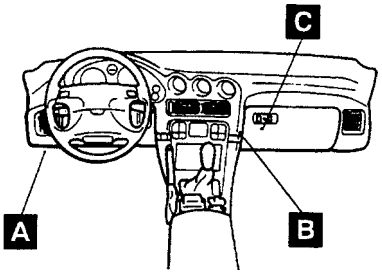

M19F0134

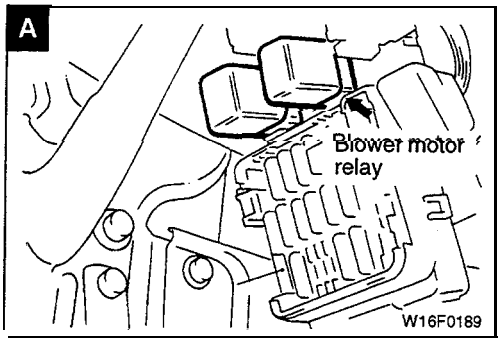

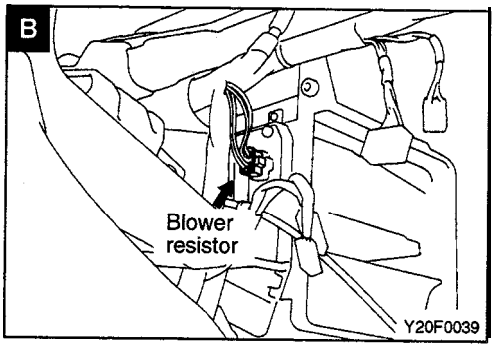

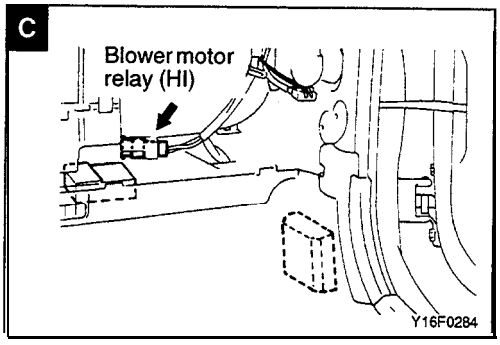

MANUAL AIR CONDITIONING CIRCUIT (1992 MODEL)

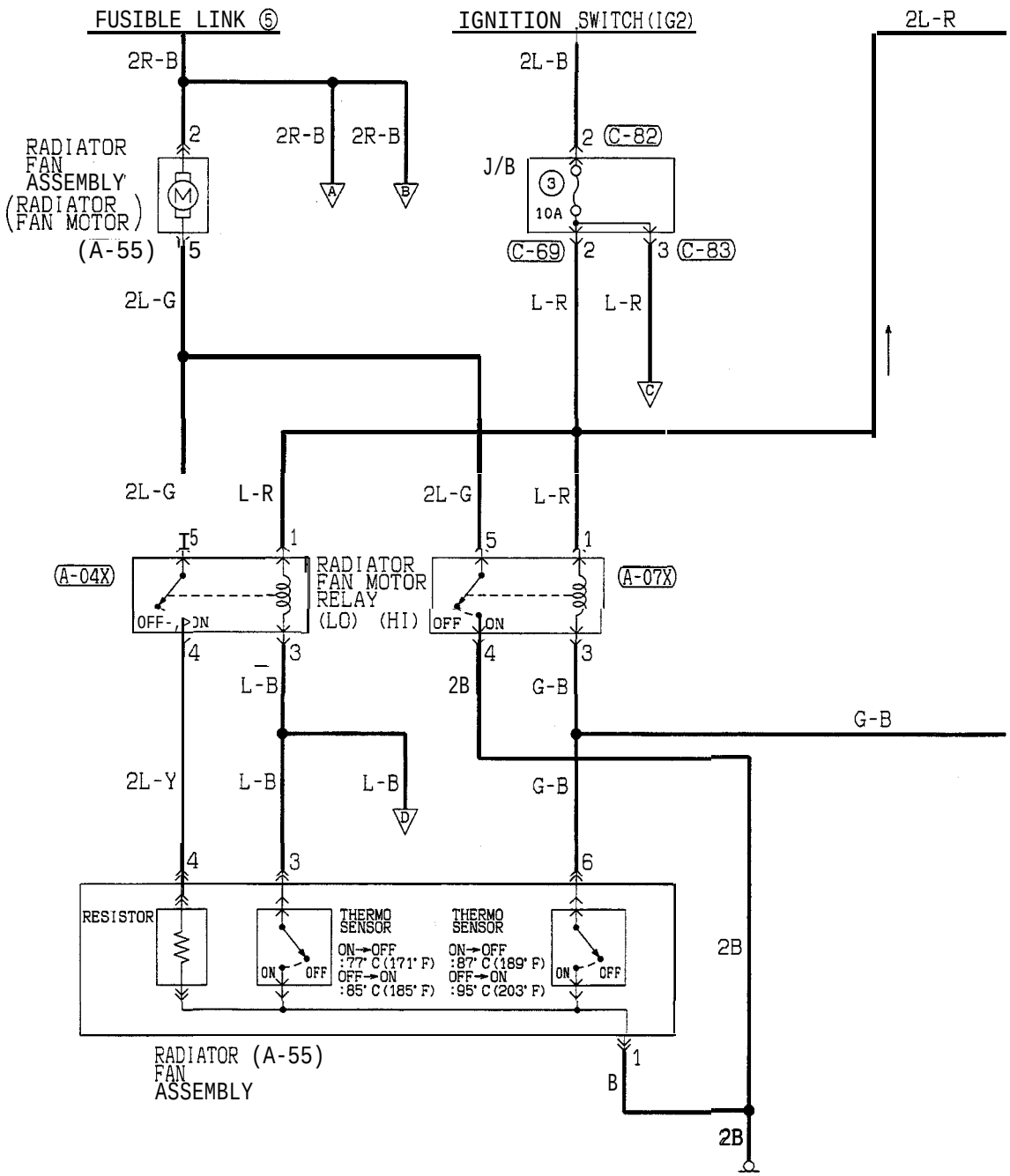

6

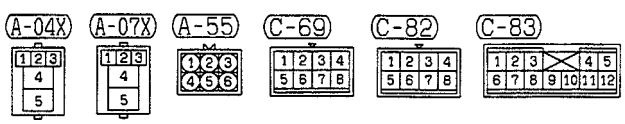

HR12M01AA

TSB Revision

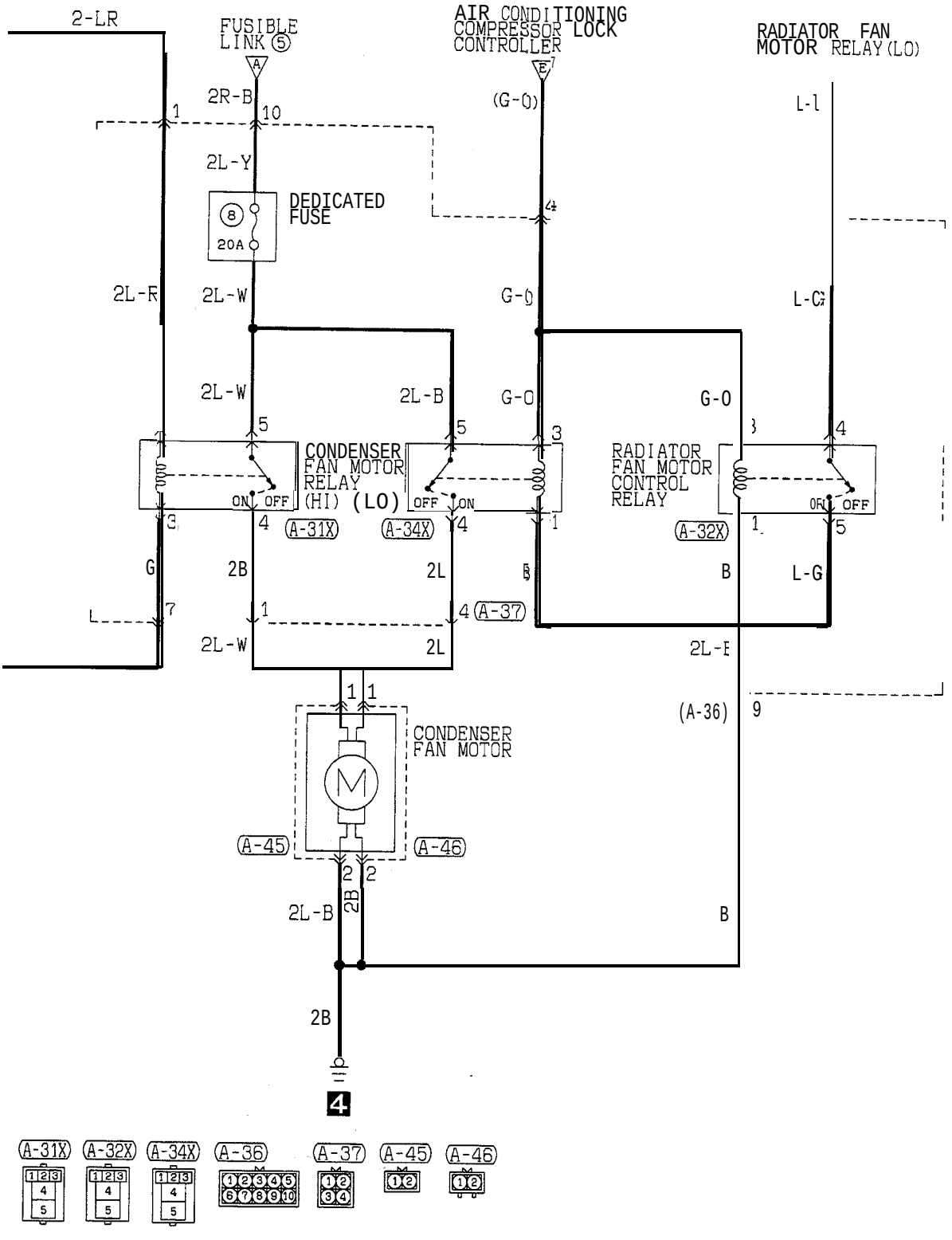
2-LR
FUSIBLE LINK ⑤
AIR CONDITIONING COMPRESSOR LOCK CONTROLLER
RADIATOR FAN MOTOR RELAY (LO)
2R-B
(G-O)
L-I
2L-Y
DEDICATED FUSE
⑧
20A
2L-R
2L-W
G-O
L-G
2L-W
2L-B
G-O
G-O
CONDENSER FAN MOTOR RELAY (HI) (LO)
RADIATOR FAN MOTOR CONTROL RELAY
ON OFF
OFF ON
(A-31X)
(A-34X)
(A-32X)
G
2B
2L
B
B
L-G
(A-37)
2L-W
2L
2L-B
(A-36)
CONDENSER FAN MOTOR
(A-45)
(A-46)
2L-B
2B
B
2B
4
(A-31X)
(A-32X)
(A-34X)
(A-36)
(A-37)
(A-45)
(A-46)

HR12M01AB

MANUAL AIR CONDITIONING CIRCUIT (1992 MODEL) (CONTINUED)

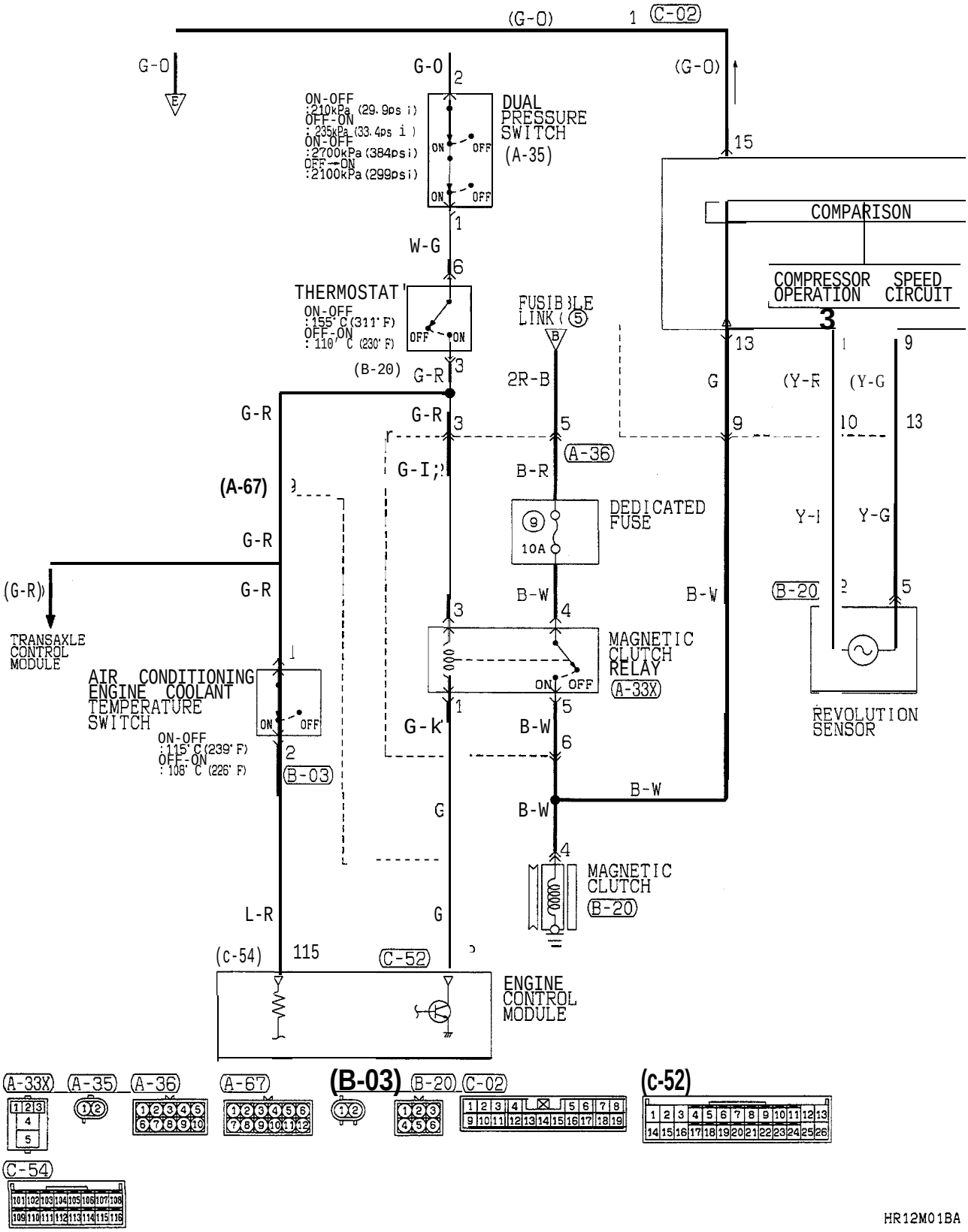

TSB Revision

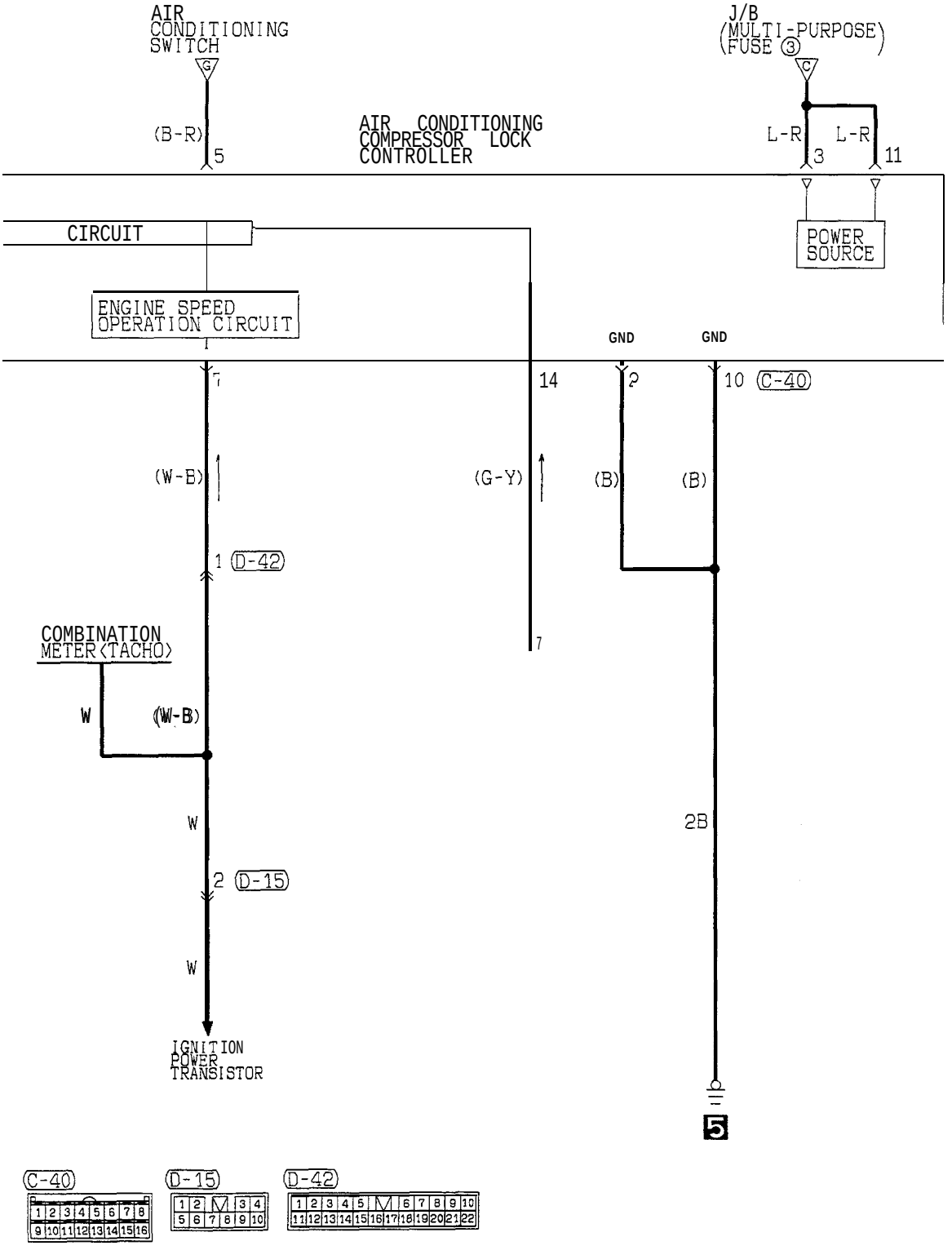
AIR CONDITIONING SWITCH
G
(B-R)
5
AIR CONDITIONING COMPRESSOR LOCK CONTROLLER
J/B (MULTI-PURPOSE) (FUSE 3)
C
L-R
L-R
3
11
POWER SOURCE
CIRCUIT
ENGINE SPEED OPERATION CIRCUIT
GND
GND
7
14
2
10 C-40
(W-B)
(G-Y)
(B)
(B)
1 D-42
7
COMBINATION METER (TACHO)
W
(W-B)
W
2B
2 D-15
W
IGNITION POWER TRANSISTOR
5
C-40
D-15
D-42

HR12M01BB

MANUAL AIR CONDITIONING CIRCUIT (1992 MODEL) (CONTINUED)

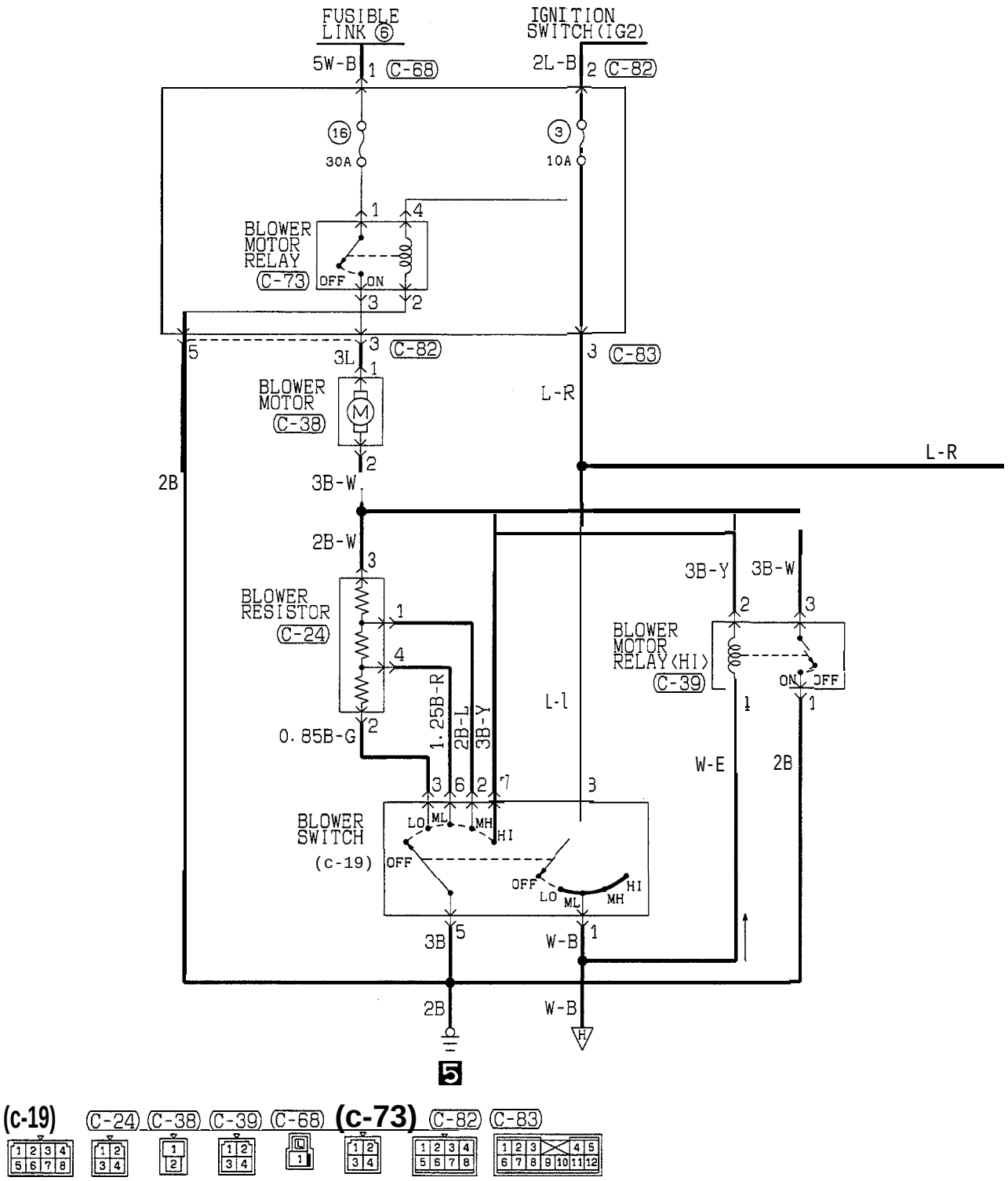

(c-19) (C-24) (C-38) (C-39) (C-68) (c-73) (C-82) (C-83)

HR12M01CA

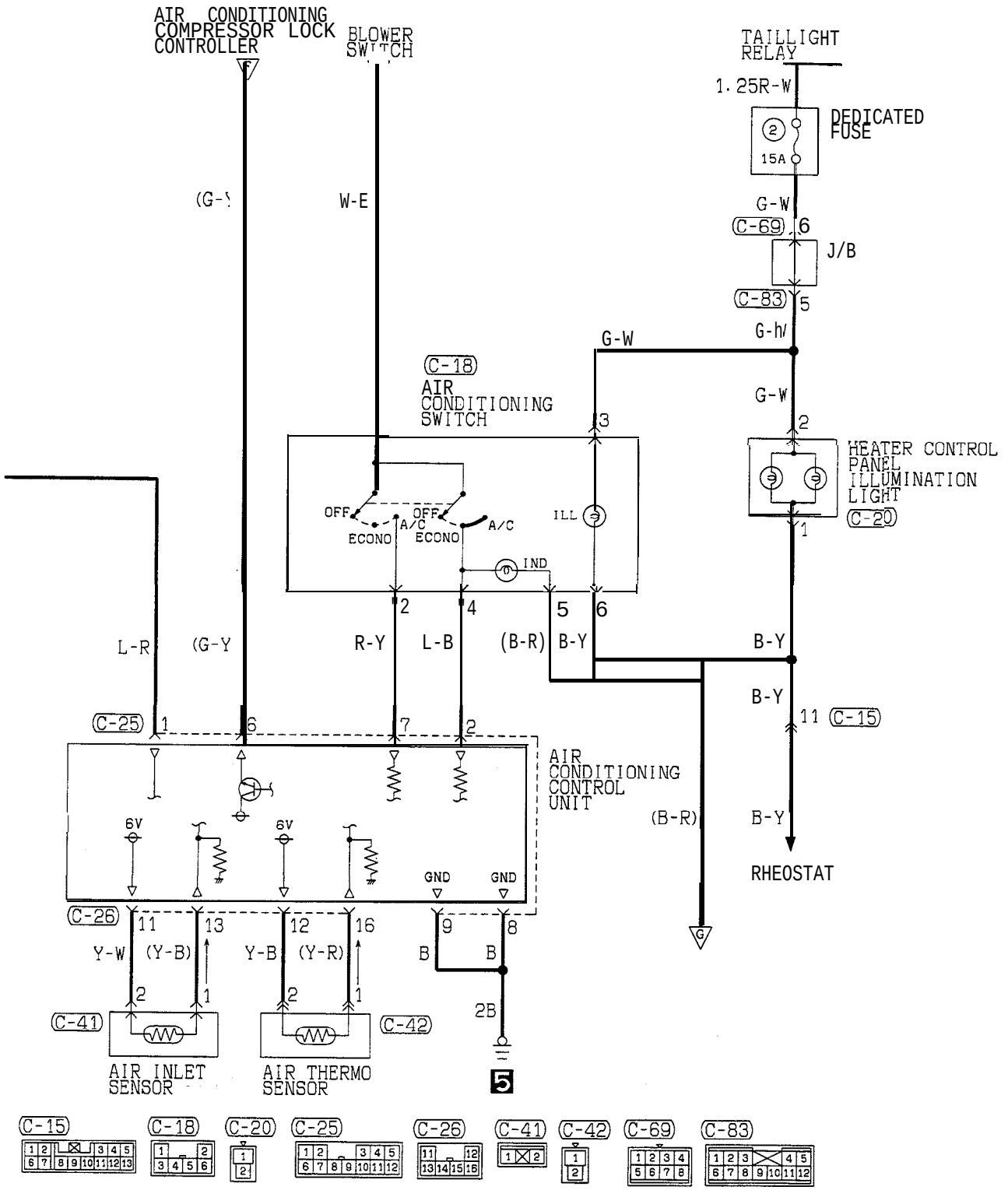

HR12M01CB

TSB Revision

MANUAL AIR CONDITIONING CIRCUIT (1993 MODELS)

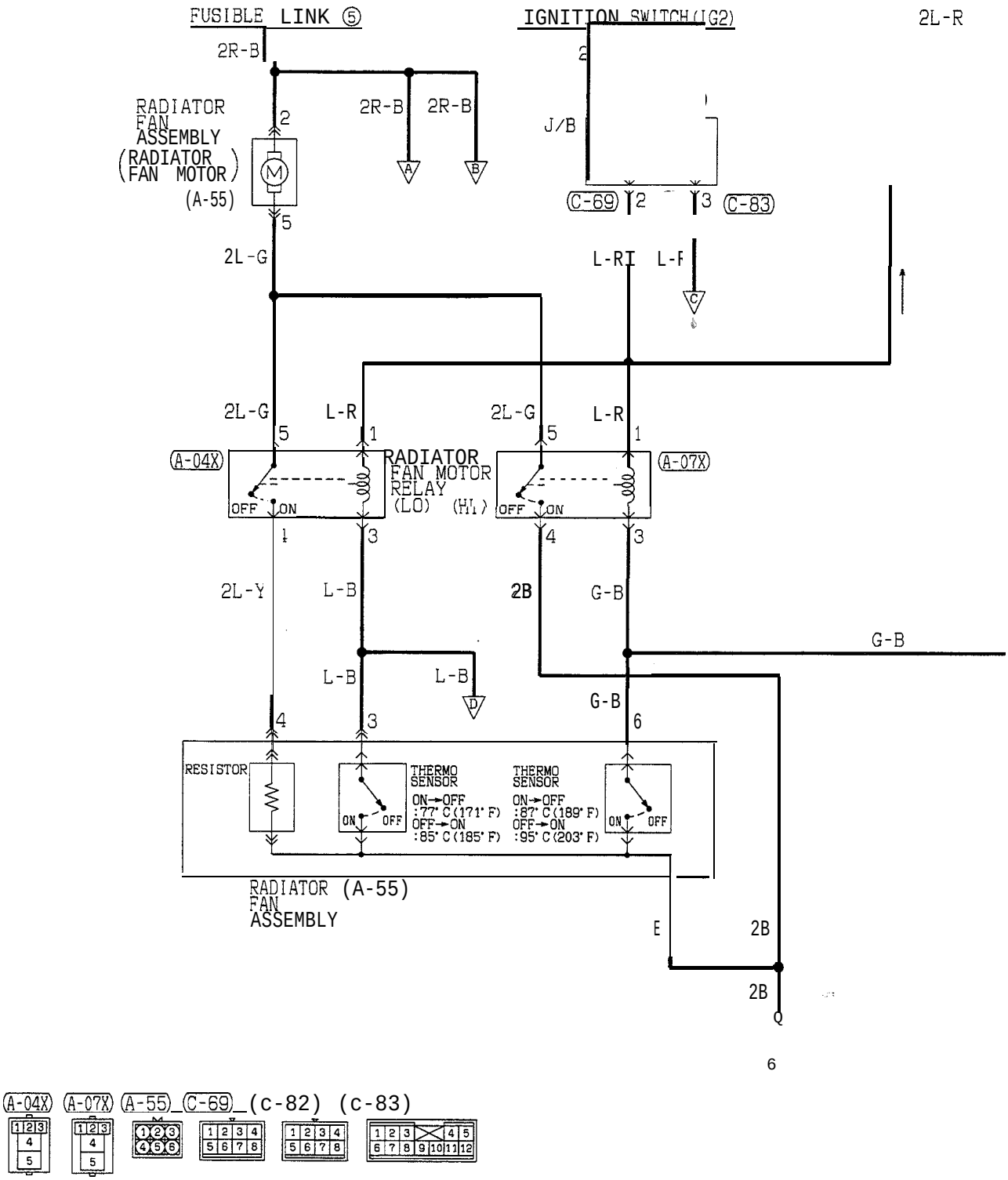

(A-04X) (A-07X) (A-55) (C-69) (c-82) (c-83)

HR12M02AA

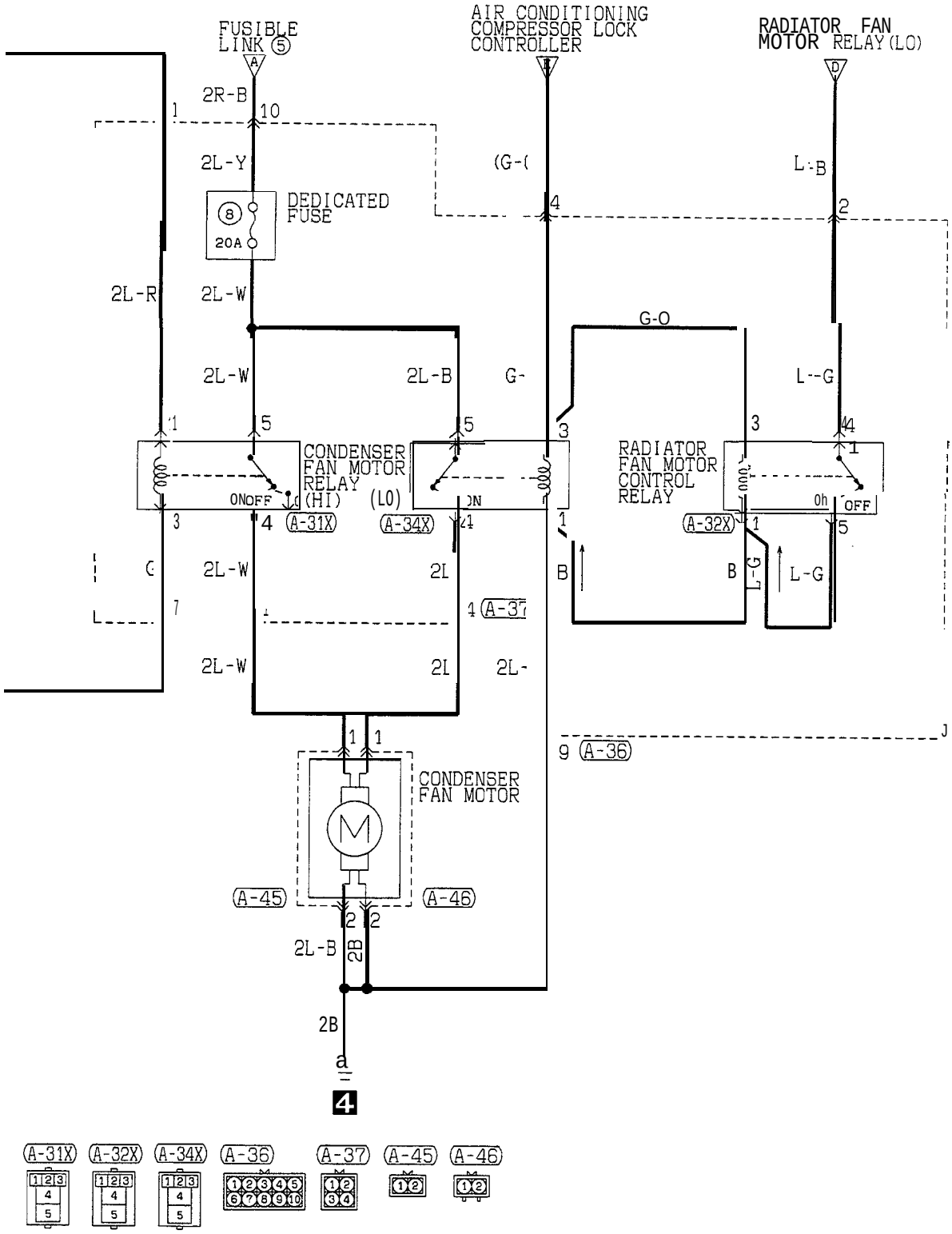
FUSIBLE LINK ⑤
AIR CONDITIONING COMPRESSOR LOCK CONTROLLER
RADIATOR FAN MOTOR RELAY (LO)
2R-B
2L-Y
DEDICATED FUSE
20A
2L-R
2L-W
2L-B
G-O
L-B
L-G
CONDENSER FAN MOTOR RELAY
(HI)
(LO)
ON OFF
RADIATOR FAN MOTOR CONTROL RELAY
OFF
(A-31X)
(A-34X)
(A-32X)
(A-36)
CONDENSER FAN MOTOR
(A-45)
(A-46)
2B

(A-31X)
(A-32X)
(A-34X)
(A-36)
(A-37)
(A-45)
(A-46)

HR12M02AB

MANUAL AIR CONDITIONING CIRCUIT (1993 MODELS) (CONTINUED)

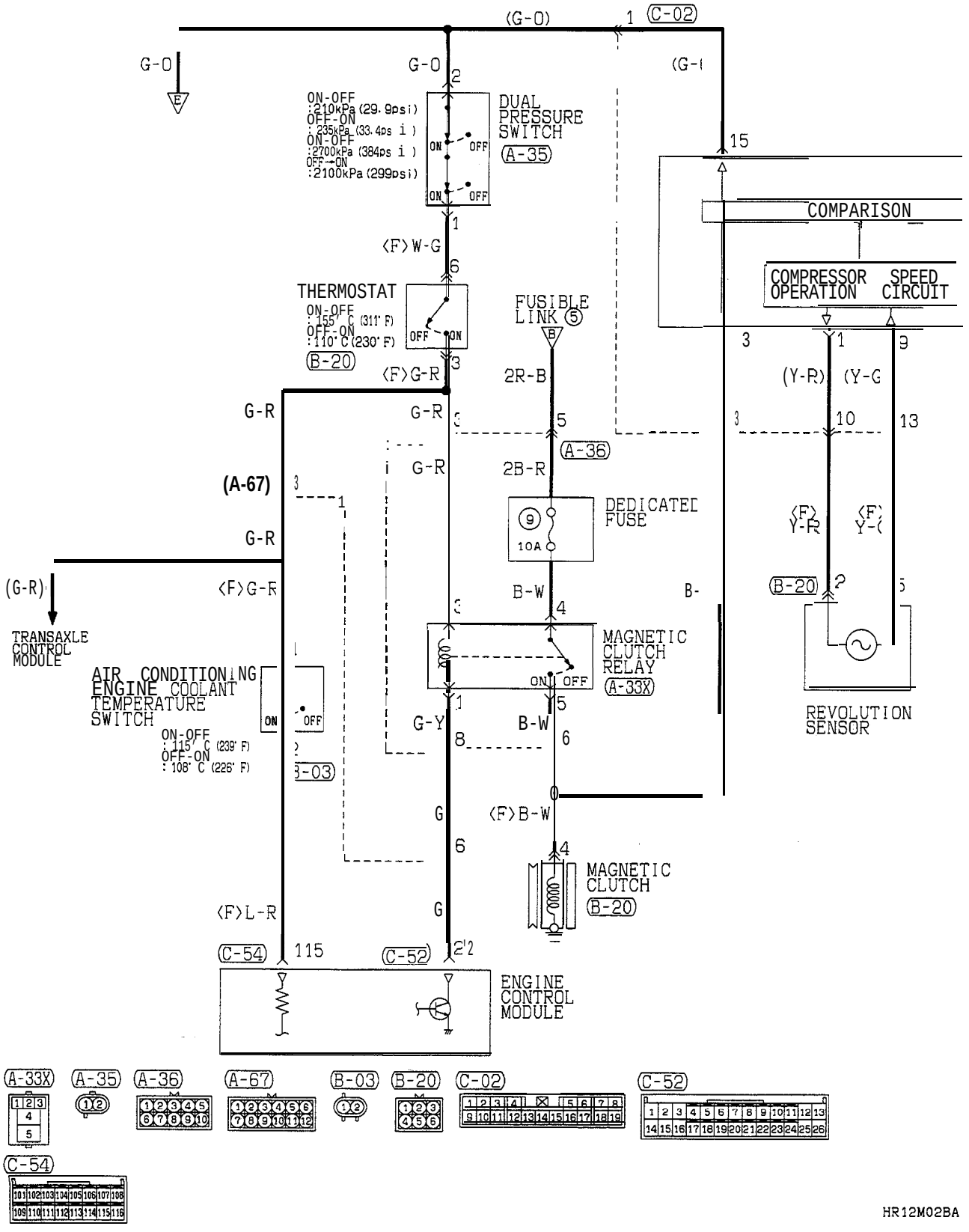

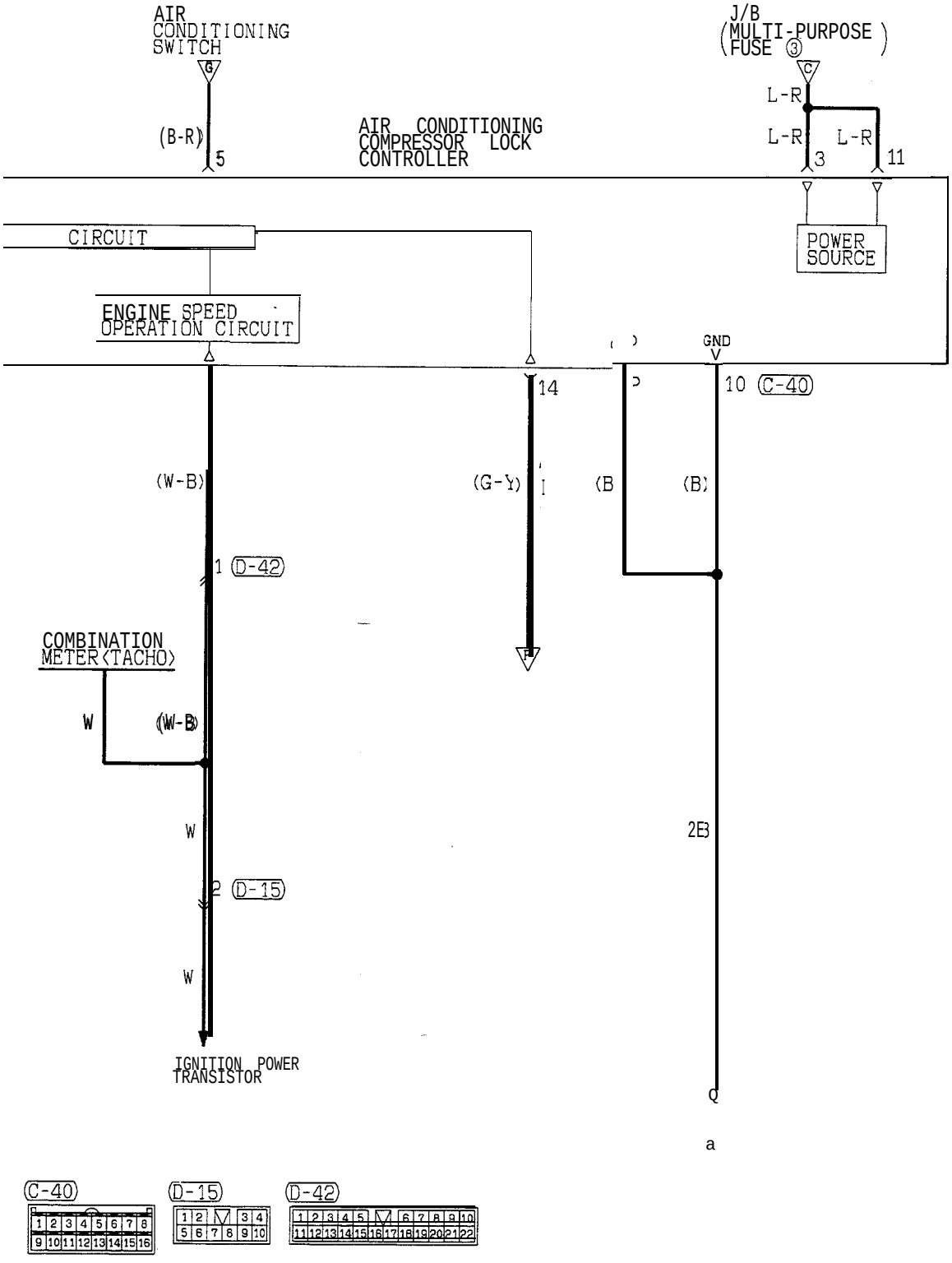
AIR CONDITIONING SWITCH
J/B (MULTI-PURPOSE FUSE ③)
L-R
(B-R)
5
AIR CONDITIONING COMPRESSOR LOCK CONTROLLER
L-R
L-R
3
11
CIRCUIT
POWER SOURCE
ENGINE SPEED OPERATION CIRCUIT
GND
14
10 C-40
(W-B)
(G-Y)
(B
(B)
1 D-42
COMBINATION METER (TACHO)
W
(W-B)
W
2B
2 D-15
W
IGNITION POWER TRANSISTOR
C-40
D-15
D-42

HR12M02BB

MANUAL AIR CONDITIONING CIRCUIT (1993 MODELS) (CONTINUED)

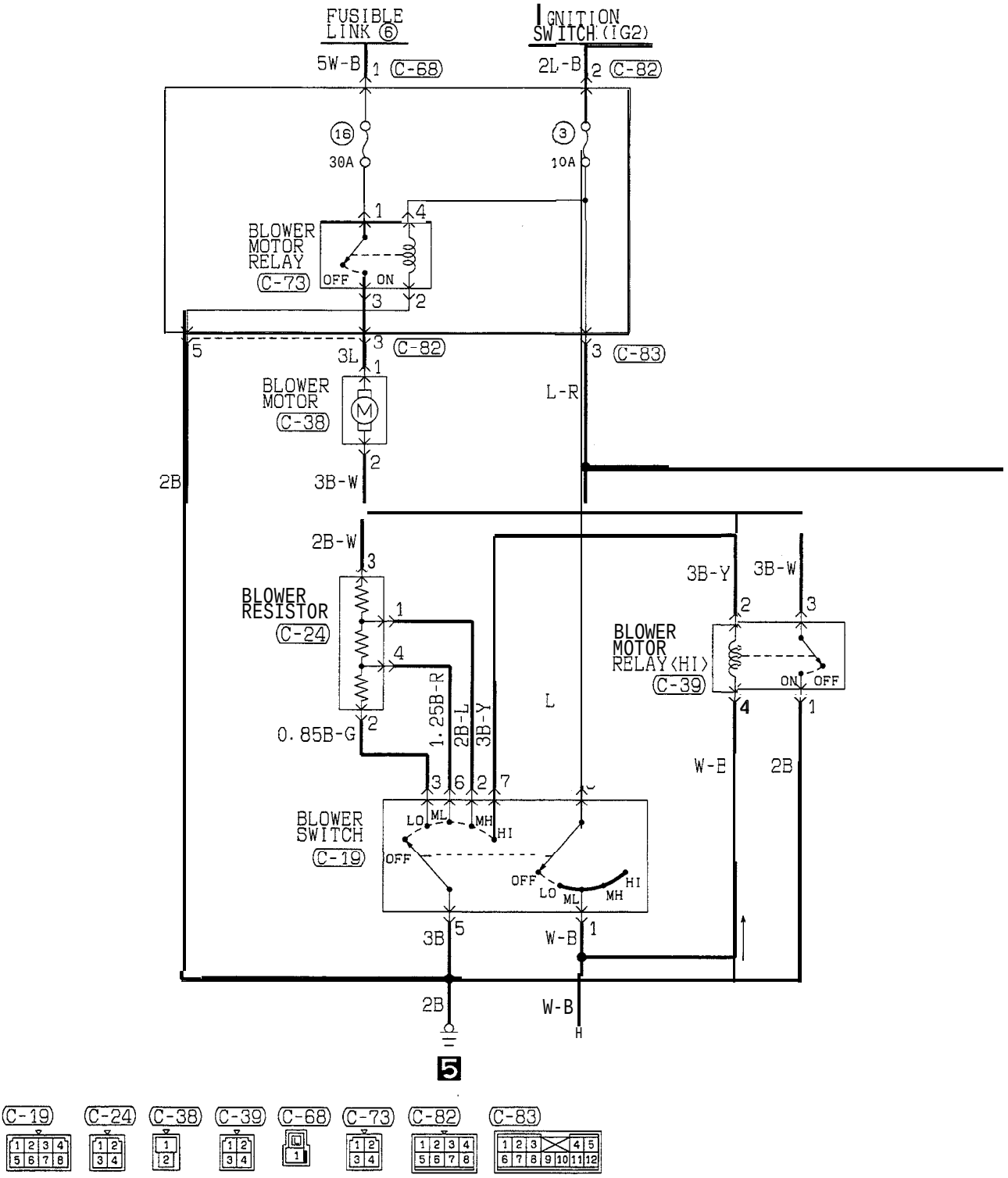

HR12M02CA

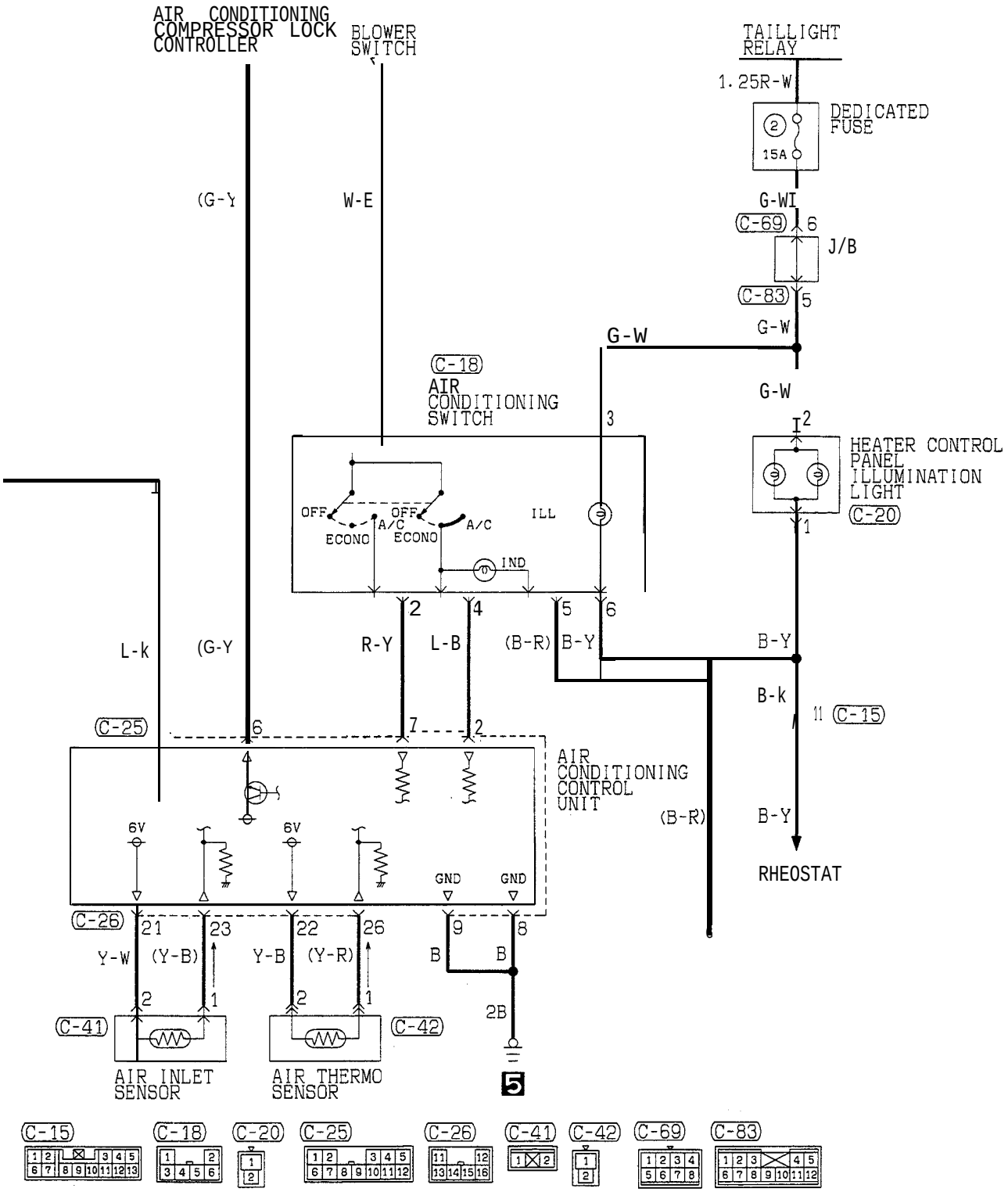
AIR CONDITIONING COMPRESSOR LOCK CONTROLLER
BLOWER SWITCH
TAILLIGHT RELAY
1.25R-W
DEDICATED FUSE
15A
G-WI
(C-69)
J/B
(C-83)
G-W
(C-18)
AIR CONDITIONING SWITCH
HEATER CONTROL PANEL ILLUMINATION LIGHT
(C-20)
OFF
A/C
ECONO
ILL
IND
L-k
(G-Y
R-Y
L-B
(B-R)
B-Y
B-k
(C-15)
(C-25)
AIR CONDITIONING CONTROL UNIT
6V
GND
RHEOSTAT
(C-26)
Y-W
(Y-B)
Y-B
(Y-R)
B
2B
(C-41)
(C-42)
AIR INLET SENSOR
AIR THERMO SENSOR
5
(C-15)
(C-18)
(C-20)
(C-25)
(C-26)
(C-41)
(C-42)
(C-69)
(C-83)

HR12M02CB

MANUAL AIR CONDITIONING CIRCUIT (1994, 1995 MODELS)

<NON TURBO> (FEDERAL)

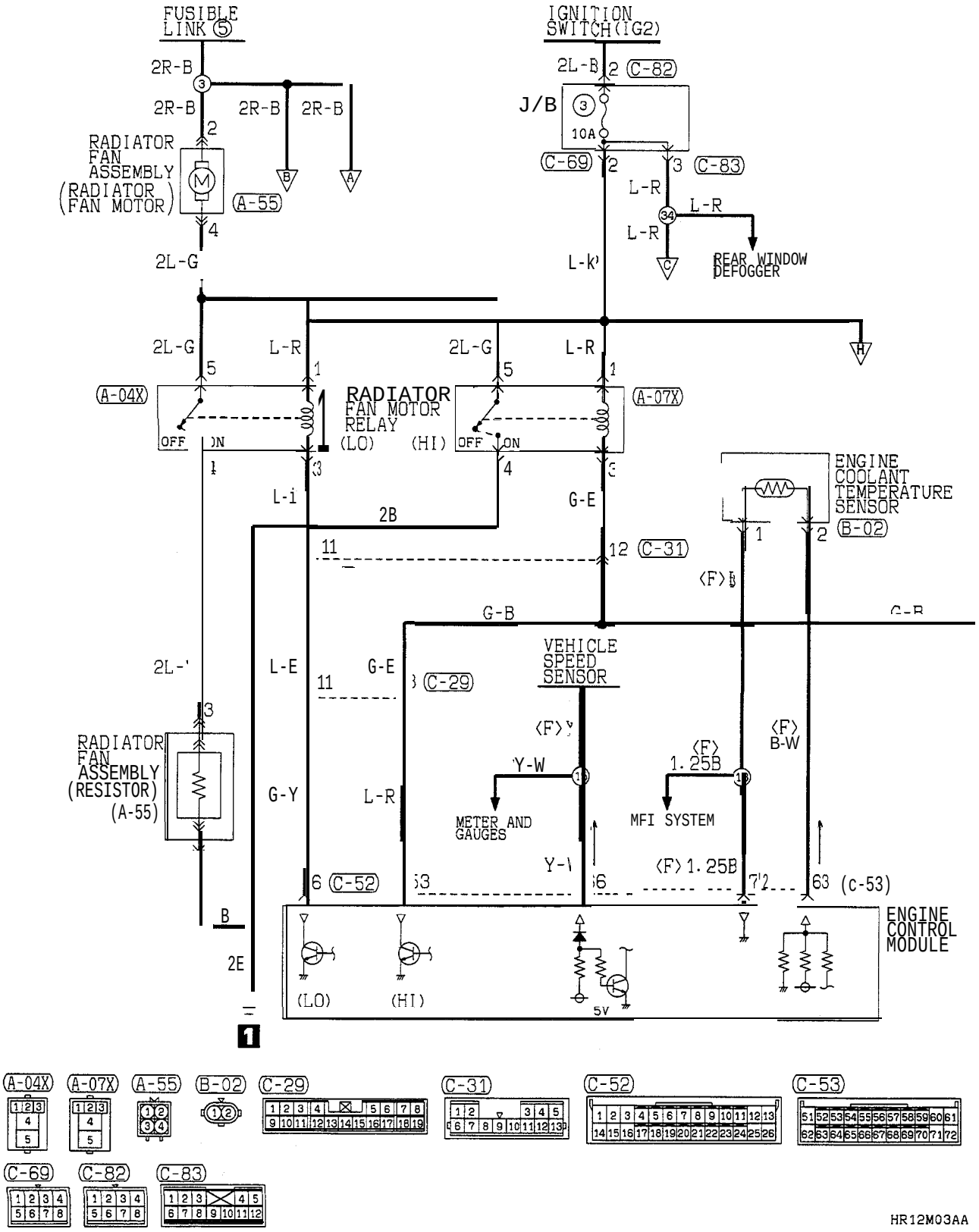

TSB Revision

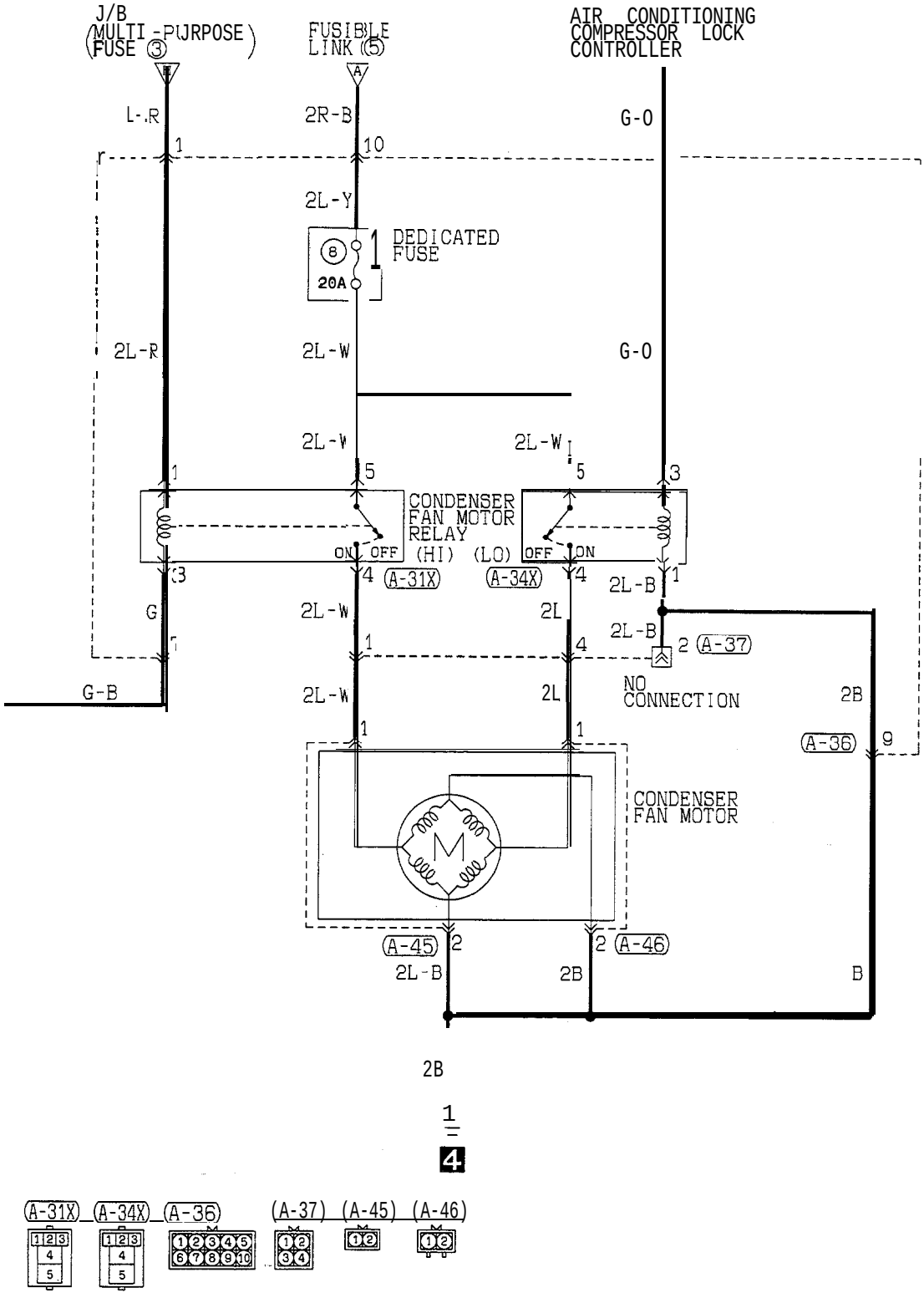
J/B
(MULTI-PURPOSE FUSE ③)
FUSIBLE LINK (⑤)
AIR CONDITIONING COMPRESSOR LOCK CONTROLLER
L-R
2R-B
G-O
2L-Y
DEDICATED FUSE
20A
2L-R
2L-W
G-O
2L-W
2L-W
CONDENSER FAN MOTOR RELAY
ON OFF (HI)
(LO) OFF ON
(A-31X)
(A-34X)
2L-B
G
2L-W
2L
2L-B
(A-37)
NO CONNECTION
G-B
2L-W
2L
2B
(A-36)
CONDENSER FAN MOTOR
(A-45)
(A-46)
2L-B
2B
B
2B
1
4

(A-31X)
(A-34X)
(A-36)
(A-37)
(A-45)
(A-46)

HR12M03AB

MANUAL AIR CONDITIONING CIRCUIT (1994, 1995 MODELS) <NON TURBO> (FEDERAL) (CONTINUED)

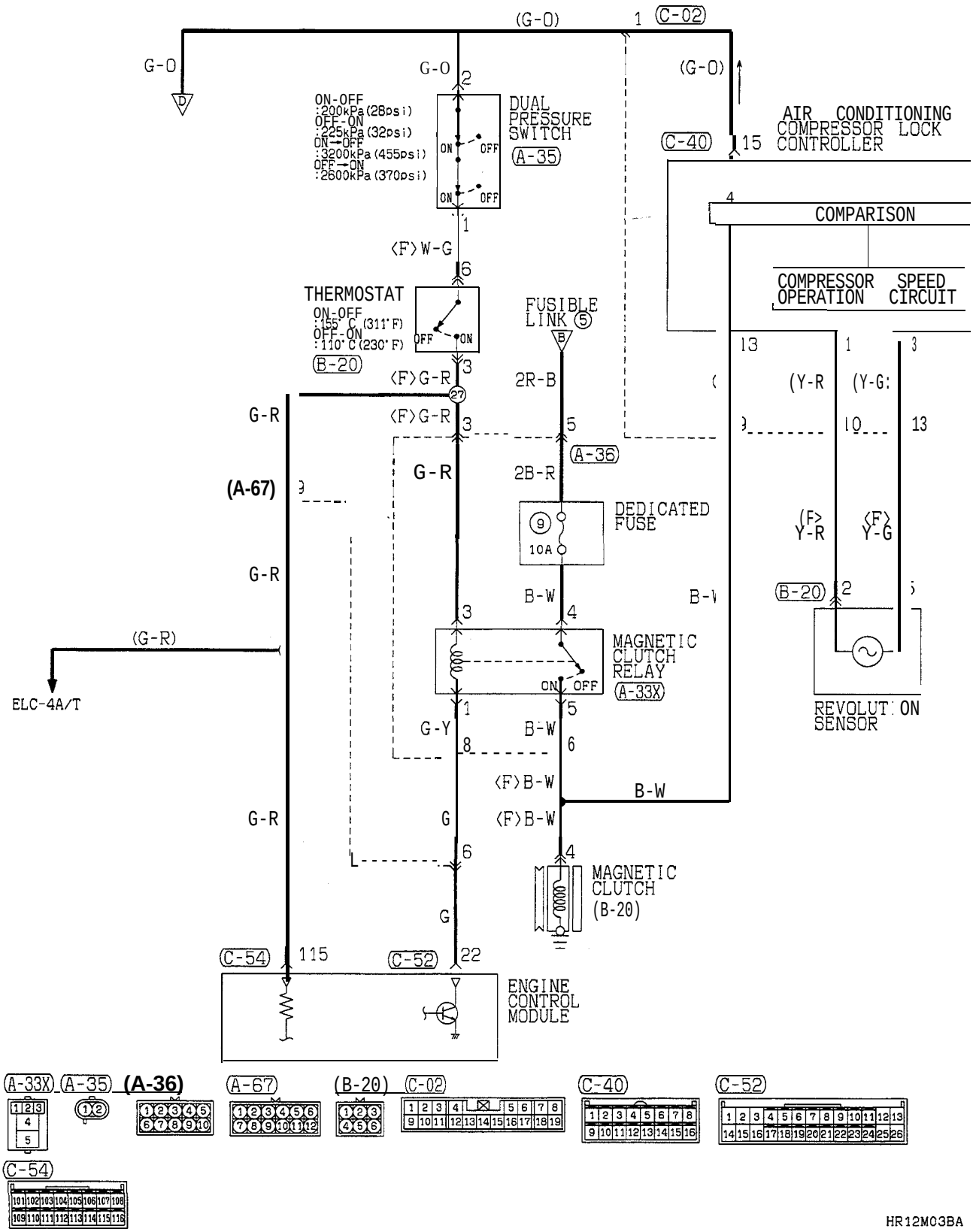

TSB Revision

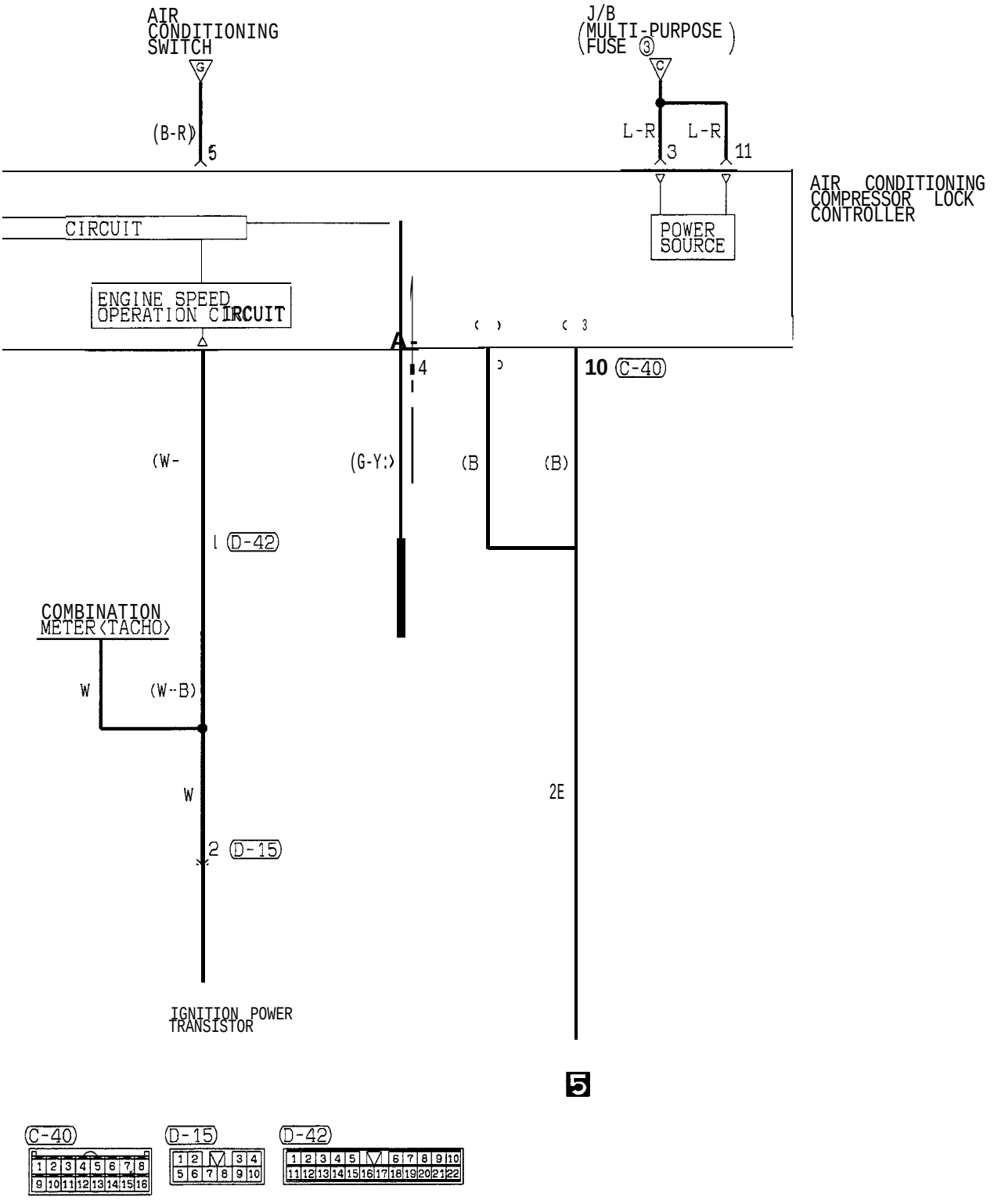
AIR CONDITIONING SWITCH
J/B (MULTI-PURPOSE FUSE 3)
(B-R)
5
L-R
3
L-R
11
AIR CONDITIONING COMPRESSOR LOCK CONTROLLER
POWER SOURCE
CIRCUIT
ENGINE SPEED OPERATION CIRCUIT
A-
4
10 C-40
(W-
(G-Y:)
(B
(B)
1 D-42
COMBINATION METER (TACHO)
W
(W-B)
W
2E
2 D-15
IGNITION POWER TRANSISTOR
5
C-40
D-15
D-42

HR 12M03BB

MANUAL AIR CONDITIONING CIRCUIT (1994, 1995 MODELS) <NON TURBO> (FEDERAL) (CONTINUED)

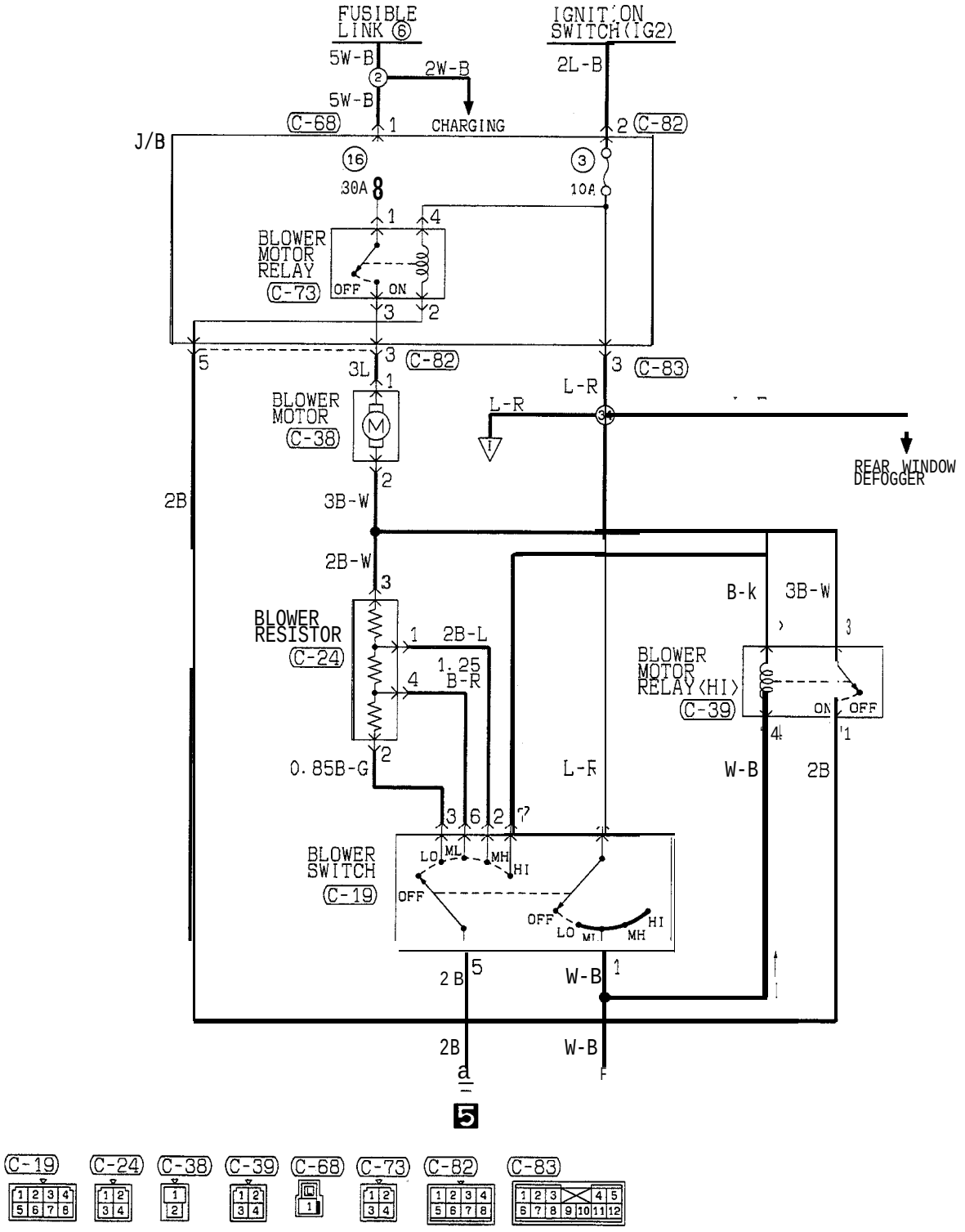

HR12M03CA

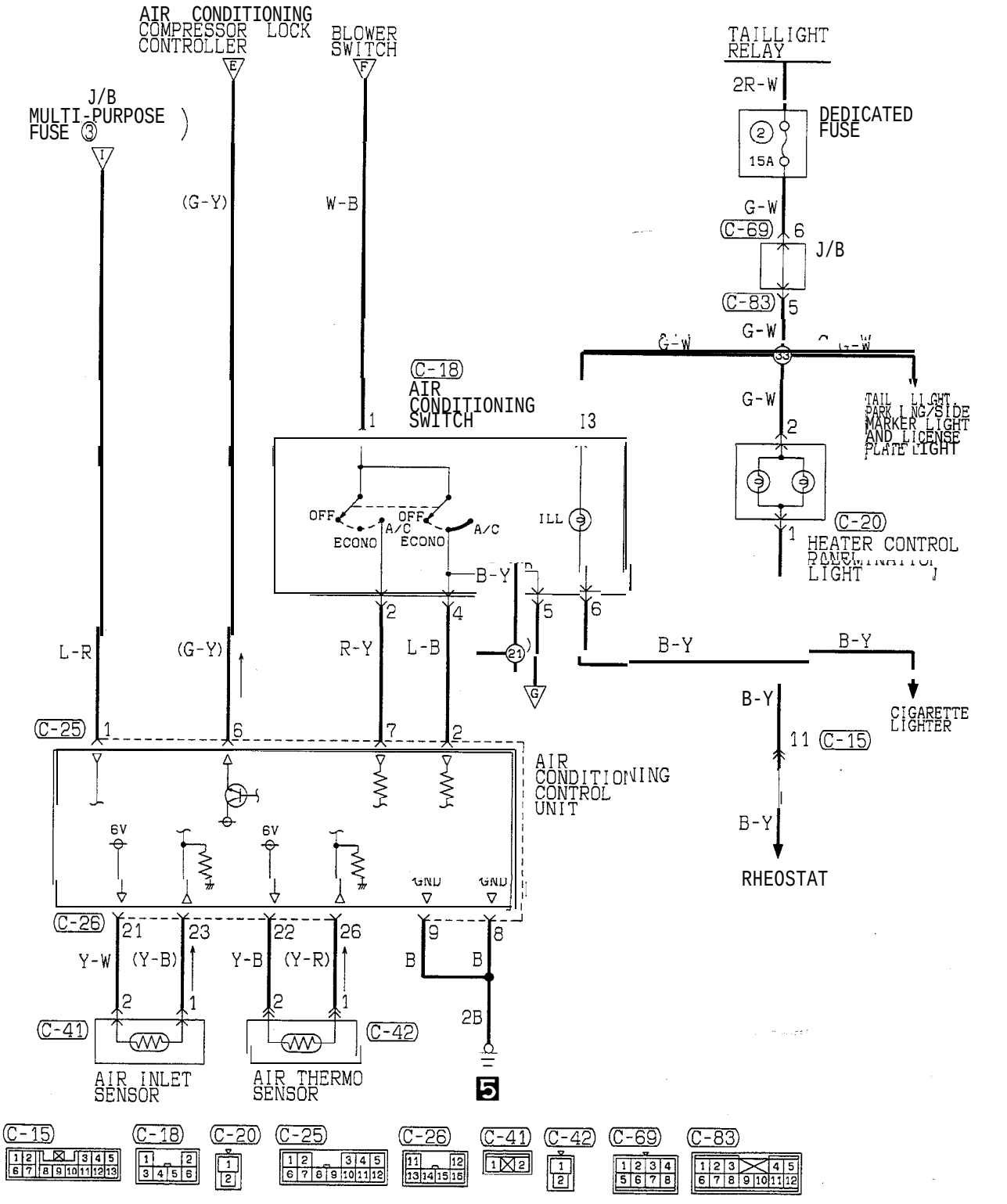
AIR CONDITIONING COMPRESSOR LOCK CONTROLLER
BLOWER SWITCH
TAILLIGHT RELAY
J/B MULTI-PURPOSE FUSE
DEDICATED FUSE
15A
(G-Y)
W-B
2R-W
G-W
(C-69)
J/B
(C-83)
(C-18)
AIR CONDITIONING SWITCH
OFF
A/C
ECONO
ILL
B-Y
TAIL LIGHT
PARKING/SIDE MARKER LIGHT AND LICENSE PLATE LIGHT
(C-20)
HEATER CONTROL PANEL ILLUMINATION LIGHT
L-R
R-Y
L-B
(C-25)
AIR CONDITIONING CONTROL UNIT
6V
GND
CIGARETTE LIGHTER
(C-15)
RHEOSTAT
(C-26)
Y-W
(Y-B)
Y-B
(Y-R)
B
2B
(C-41)
(C-42)
AIR INLET SENSOR
AIR THERMO SENSOR
5
(C-15)
(C-18)
(C-20)
(C-25)
(C-26)
(C-41)
(C-42)
(C-69)
(C-83)

HR12M03CB

MANUAL AIR CONDITIONING CIRCUIT (1994, 1995 MODELS)

<TURBO, NON TURBO (CALIFORNIA)>

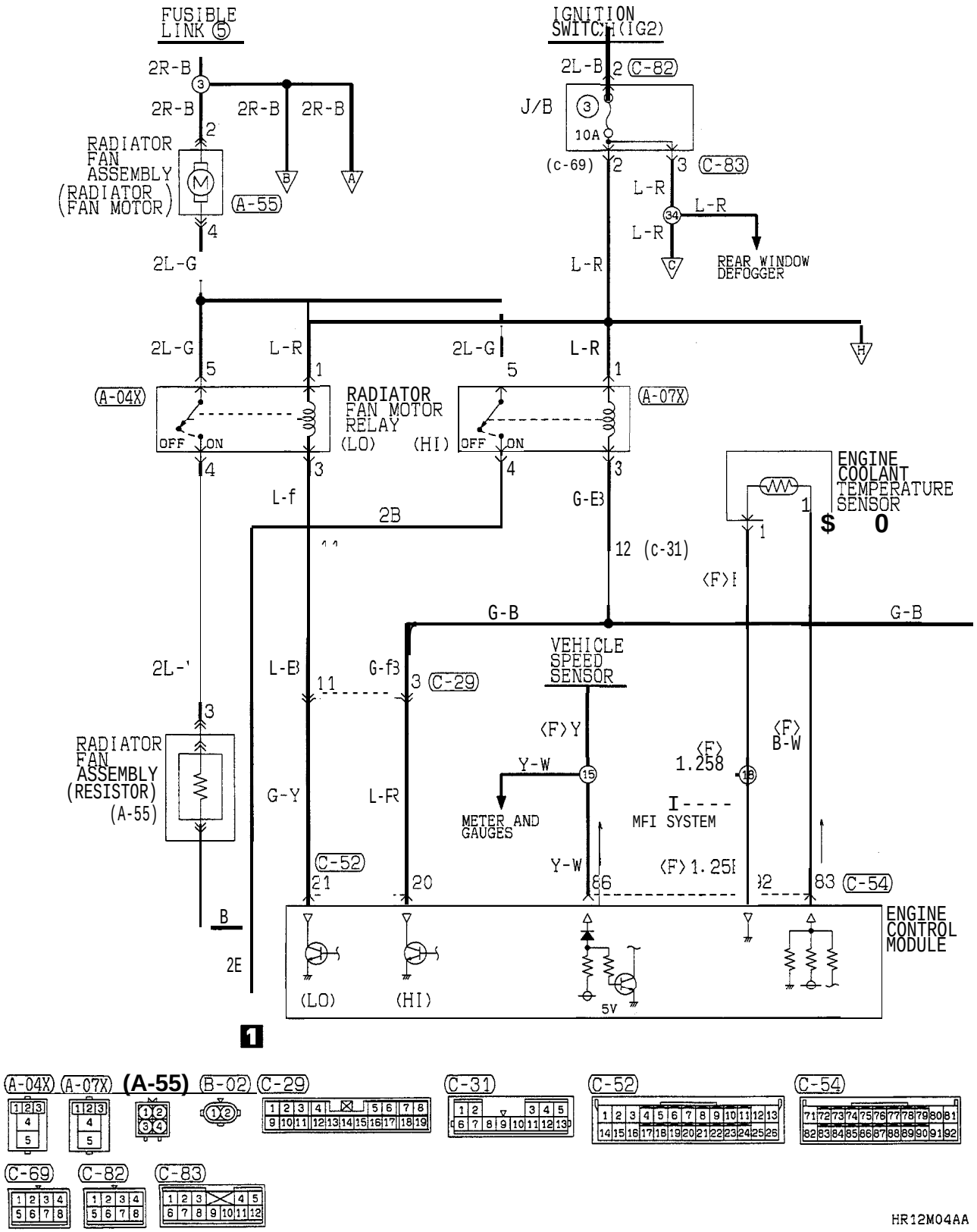

TSB Revision

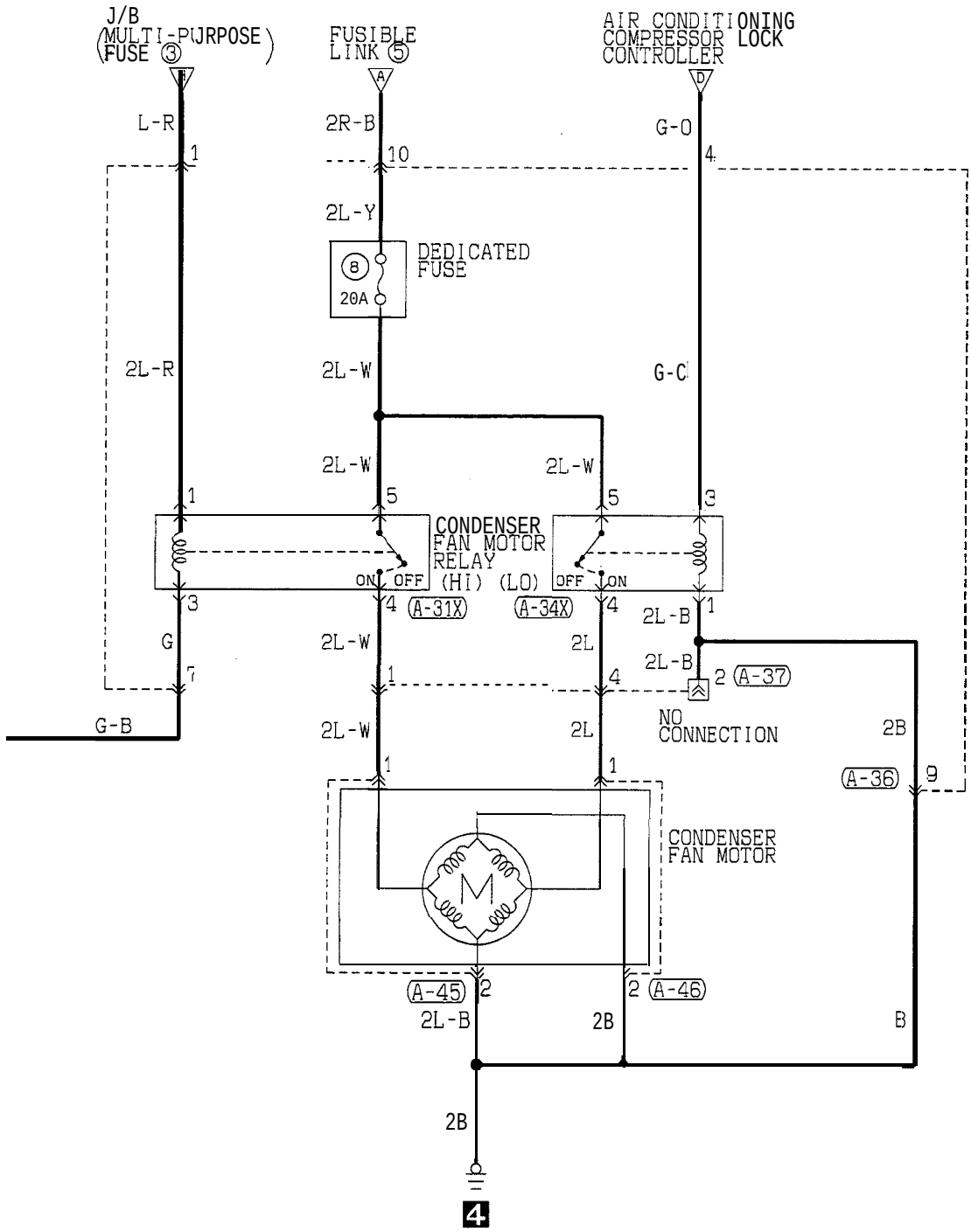

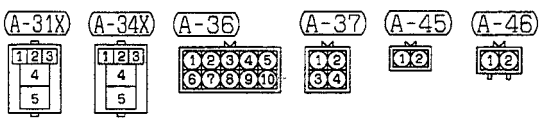

HR12M04AB

TSB Revision

MANUAL AIR CONDITIONING CIRCUIT (1994, 1995 MODELS) <TURBO, NON TURBO (CALIFORNIA)> (CONTINUED)

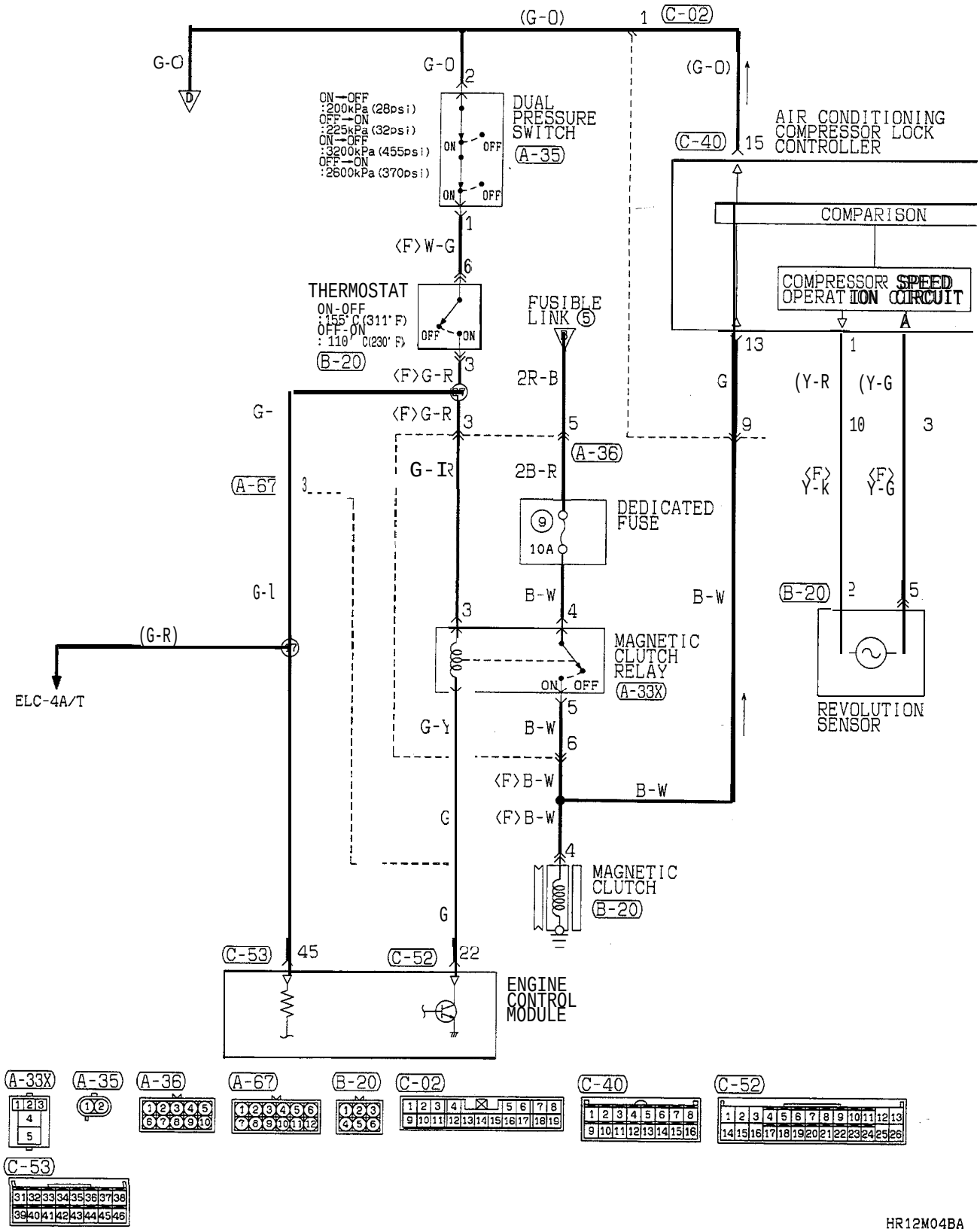

TSB Revision

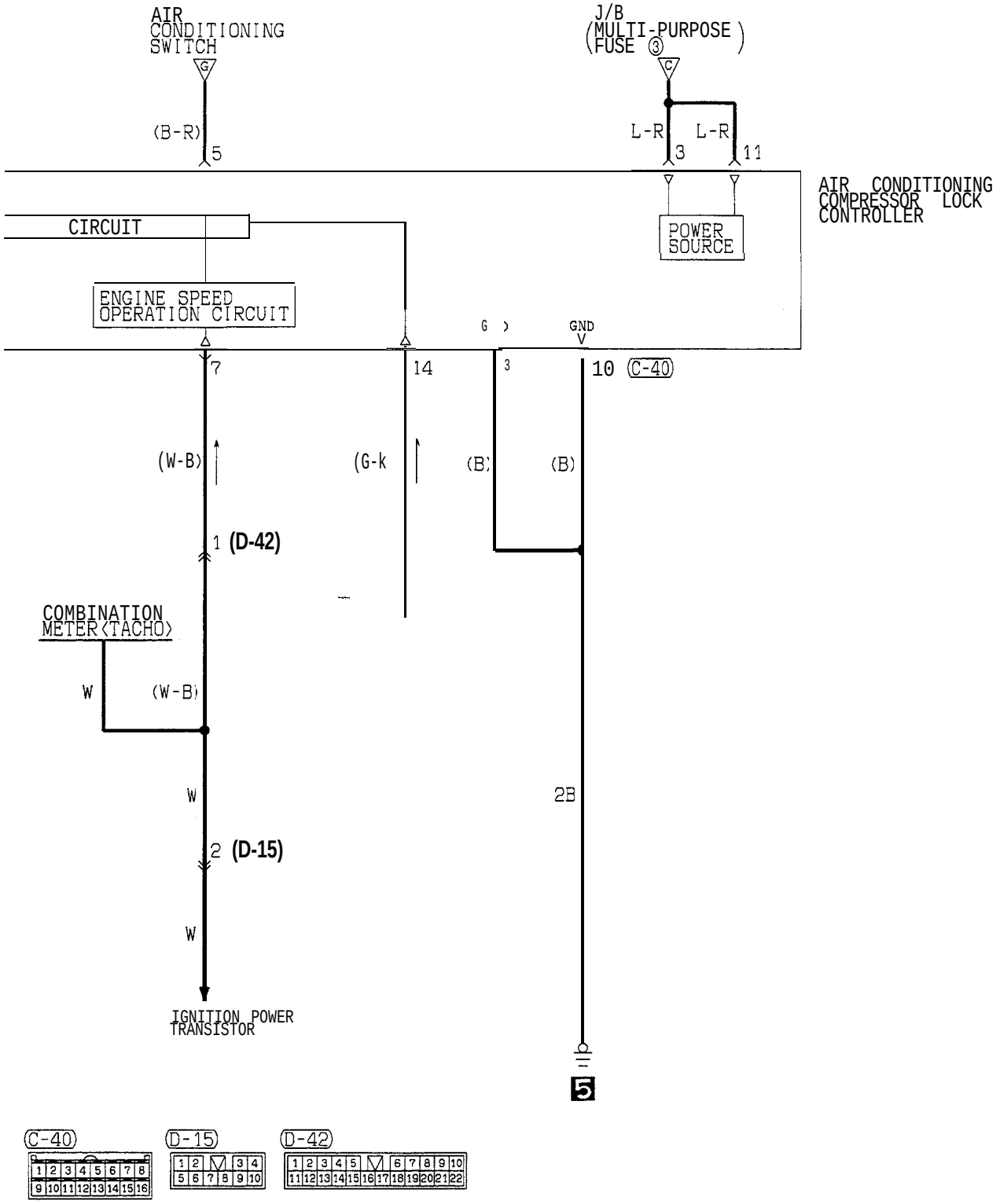
AIR CONDITIONING SWITCH
G
(B-R)
5
J/B
(MULTI-PURPOSE FUSE 3)
C
L-R
L-R
3
11
AIR CONDITIONING COMPRESSOR LOCK CONTROLLER
POWER SOURCE
CIRCUIT
ENGINE SPEED OPERATION CIRCUIT
G
GND
7
14
3
10 (C-40)
(W-B)
(G-k
(B)
(B)
1 (D-42)
COMBINATION METER (TACHO)
W
(W-B)
W
2B
2 (D-15)
W
IGNITION POWER TRANSISTOR
5

(C-40)
(D-15)
(D-42)

HR12M04BB

MANUAL AIR CONDITIONING CIRCUIT (1994, 1995 MODELS) <TURBO, NON TURBO (CALIFORNIA)> (CONTINUED)

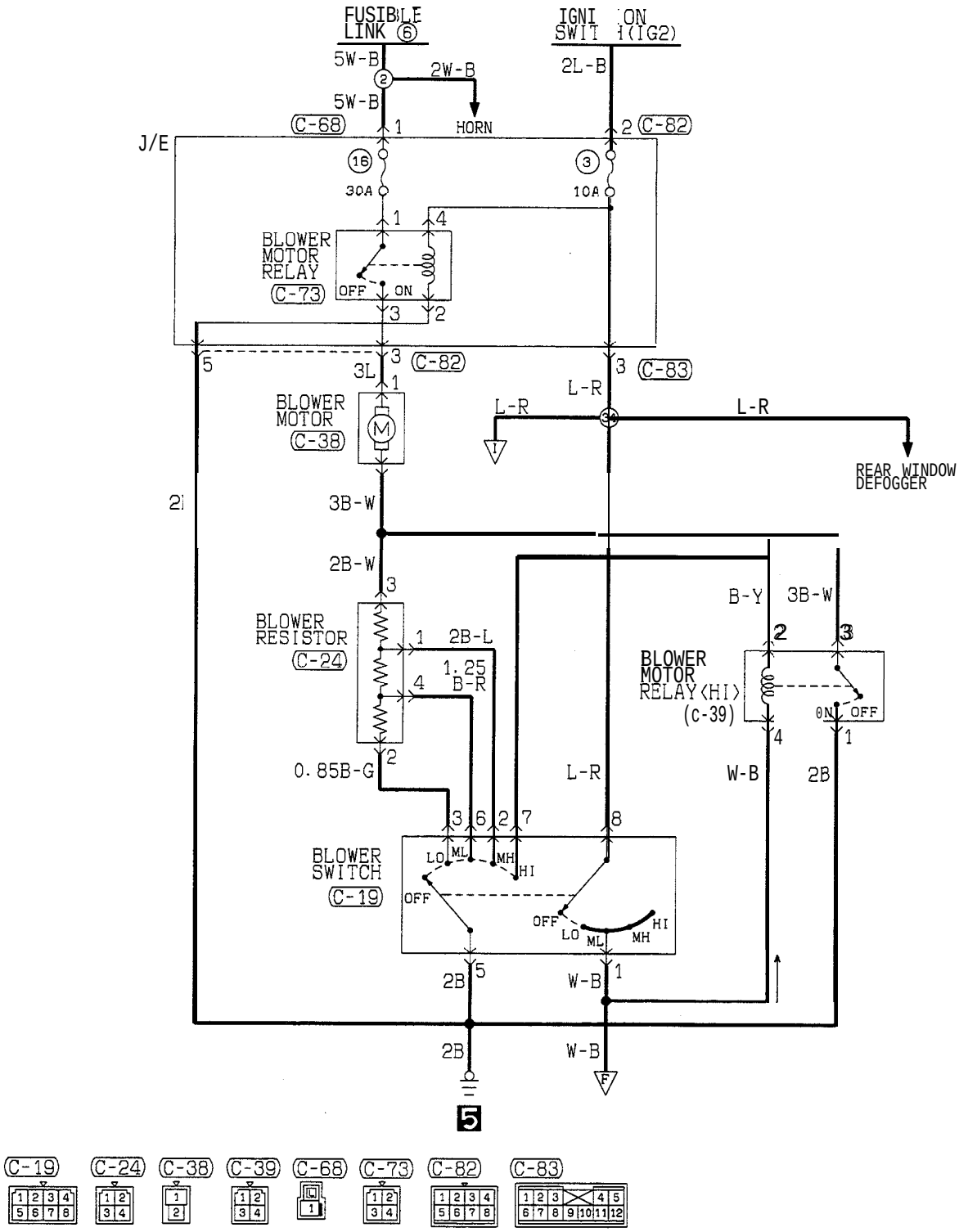

HR12M04CA

TSB Revision

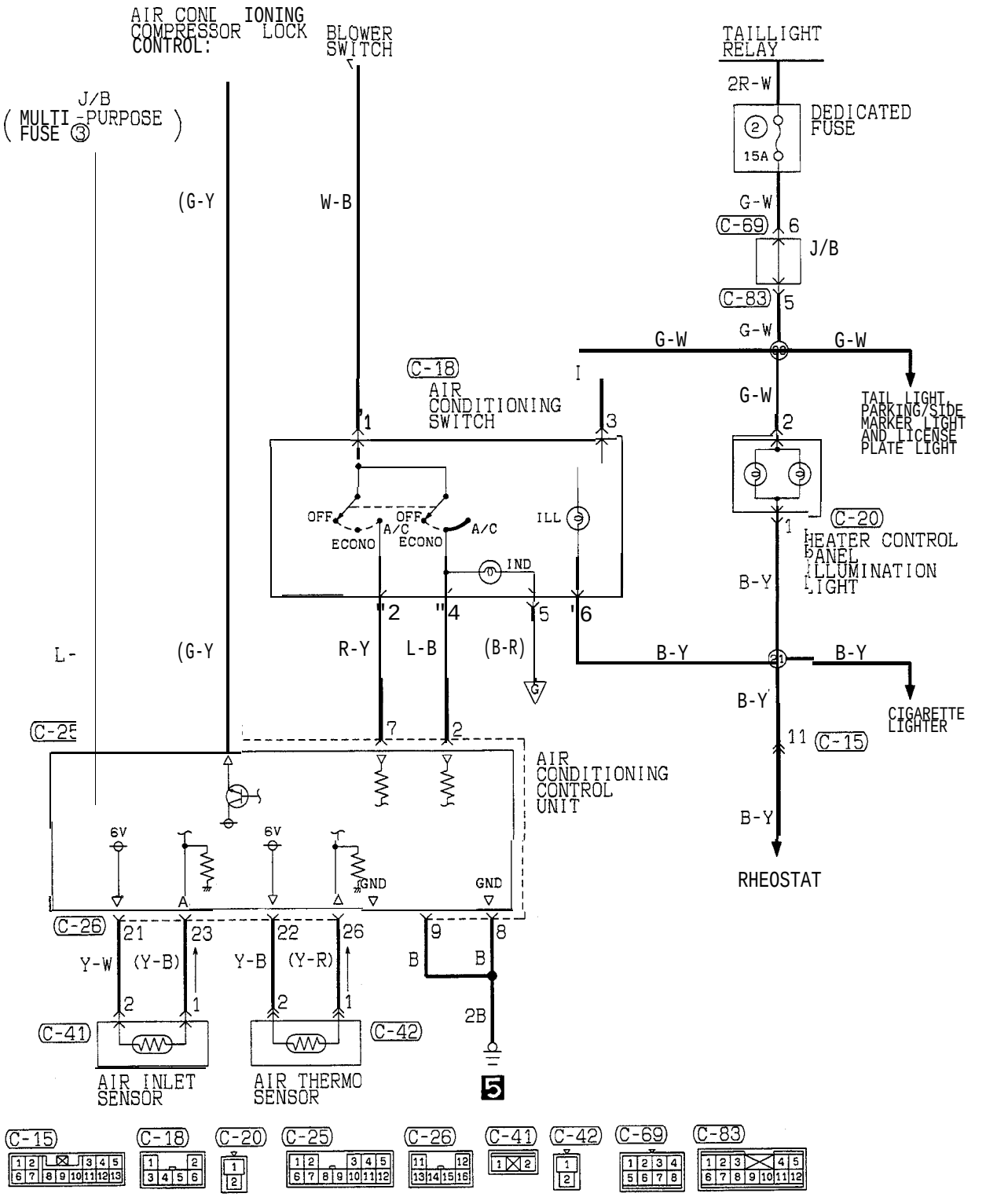

HR12M04CB

TSB Revision

MANUAL AIR CONDITIONING CIRCUIT (FROM 1996 MODELS)

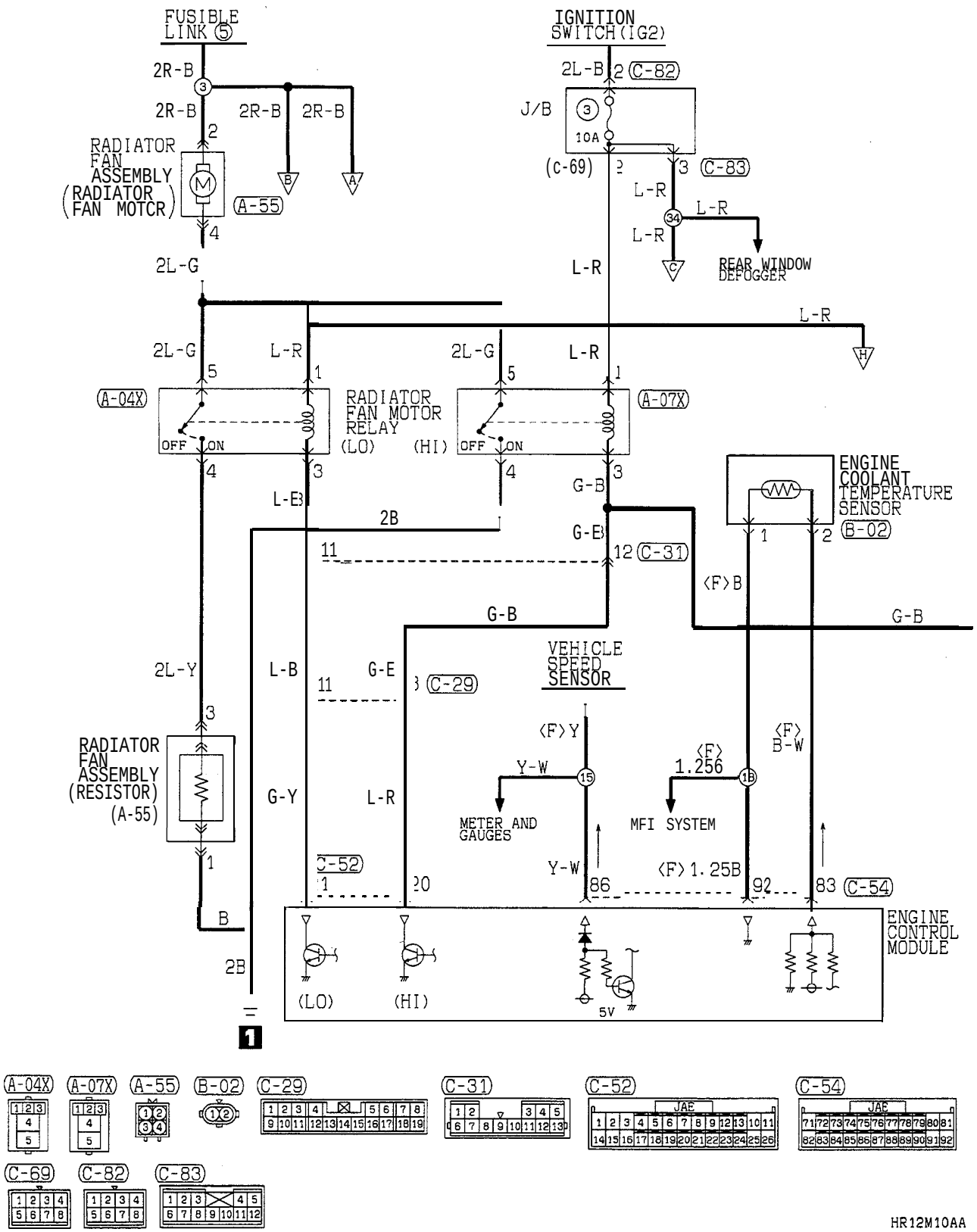

TSB Revision

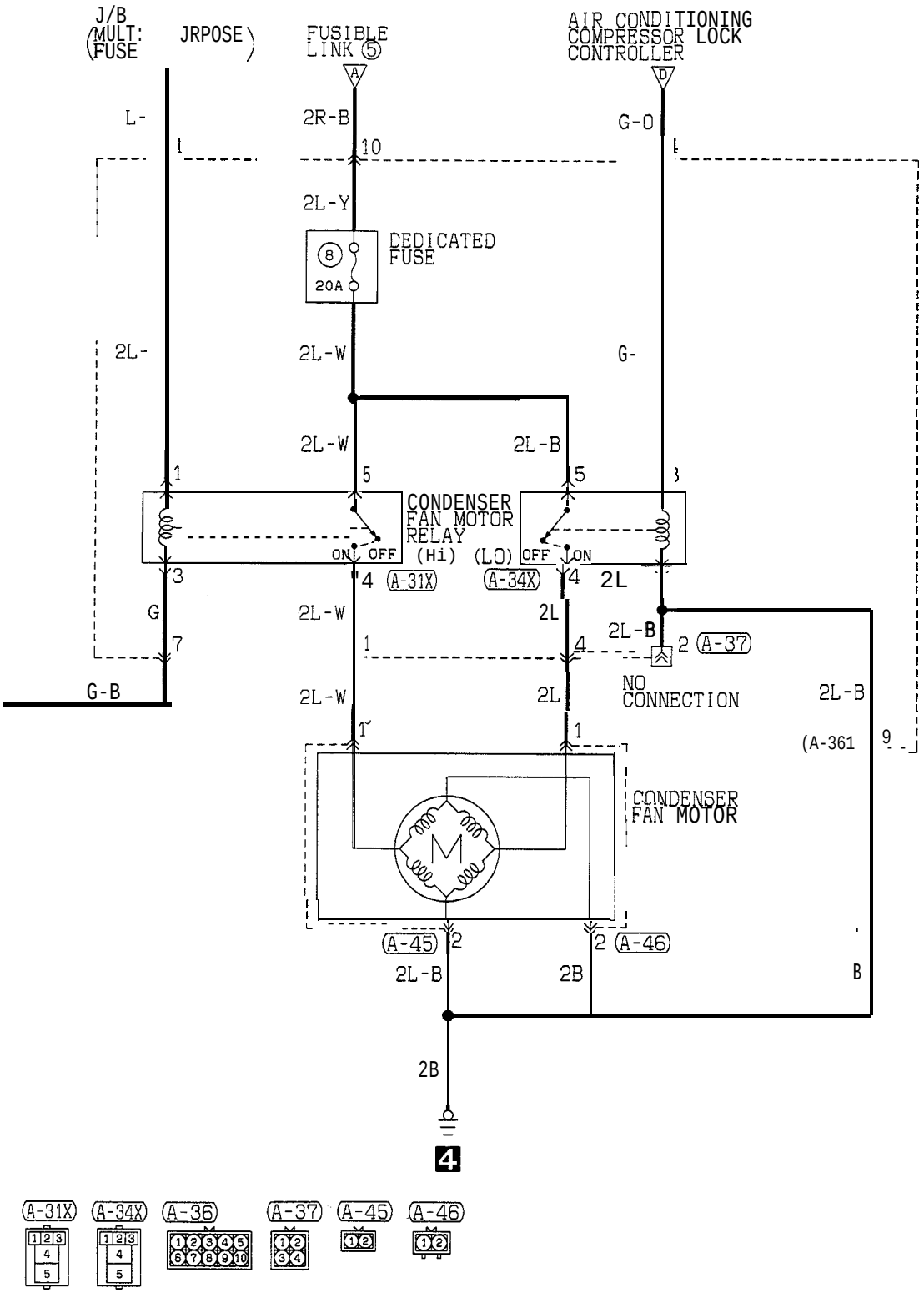

HR12M10AB

TSB Revision

MANUAL AIR CONDITIONING CIRCUIT (FROM 1996 MODELS) (CONTINUED)

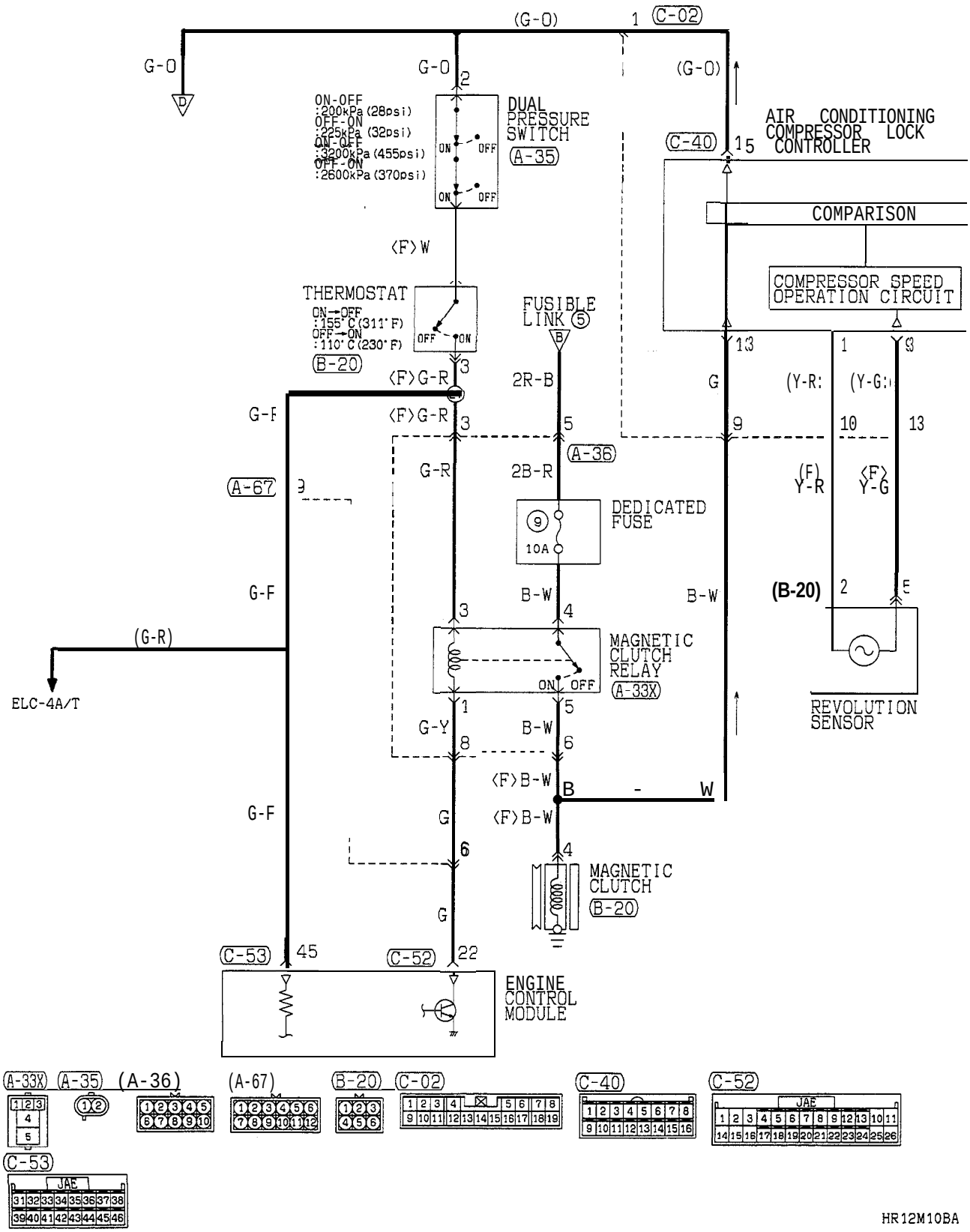

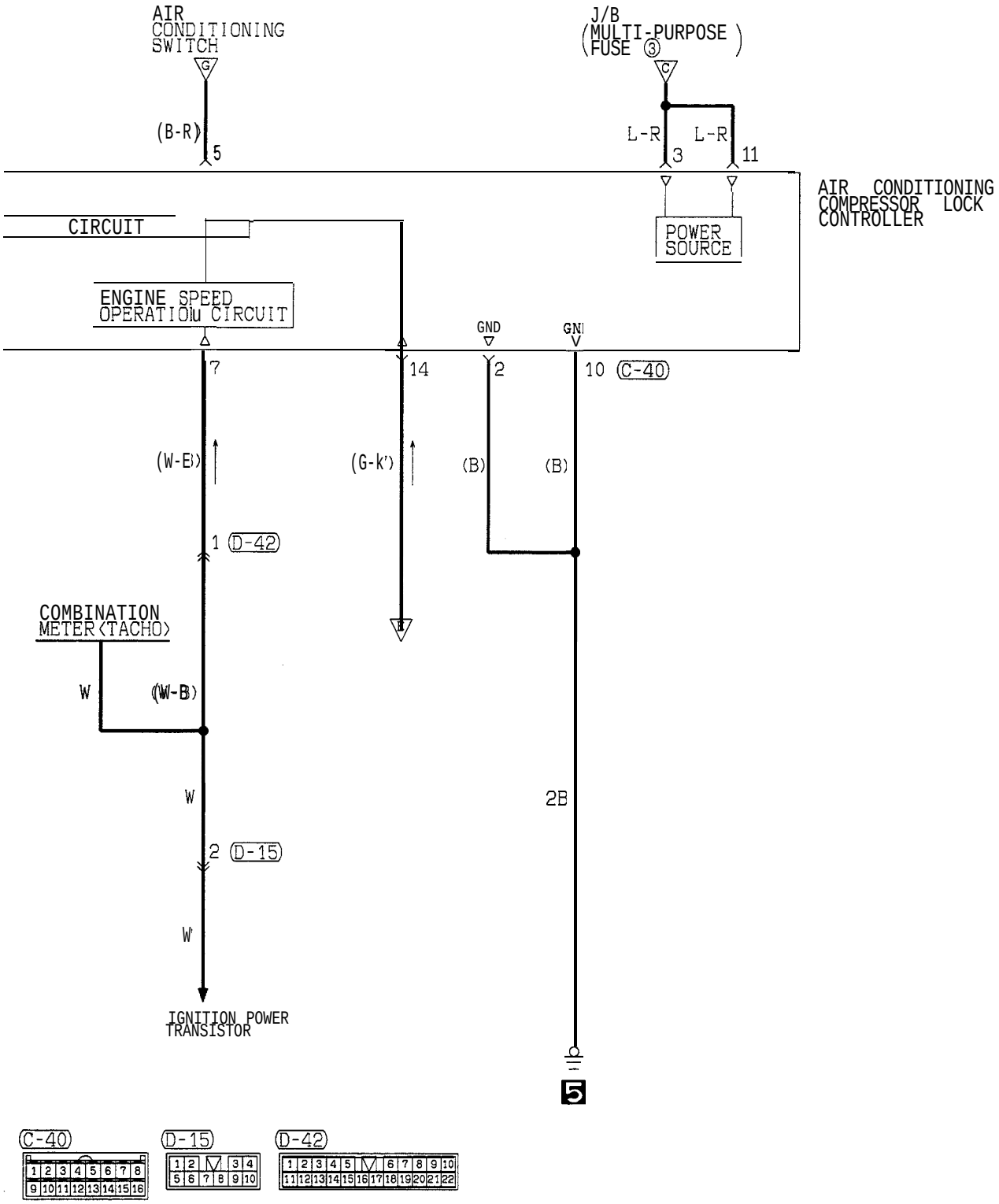
AIR CONDITIONING SWITCH
G
(B-R)
5
J/B
(MULTI-PURPOSE FUSE ③)
C
L-R
L-R
3
11
AIR CONDITIONING COMPRESSOR LOCK CONTROLLER
POWER SOURCE
CIRCUIT
ENGINE SPEED OPERATIOlu CIRCUIT
GND
GN
7
14
2
10 (C-40)
(W-E)
(G-k')
(B)
(B)
1 (D-42)
COMBINATION METER (TACHO)
W
(W-B)
W
2B
2 (D-15)
W
IGNITION POWER TRANSISTOR
5
(C-40)
(D-15)
(D-42)

HR12M10BB

MANUAL AIR CONDITIONING CIRCUIT (FROM 1996 MODELS) (CONTINUED)

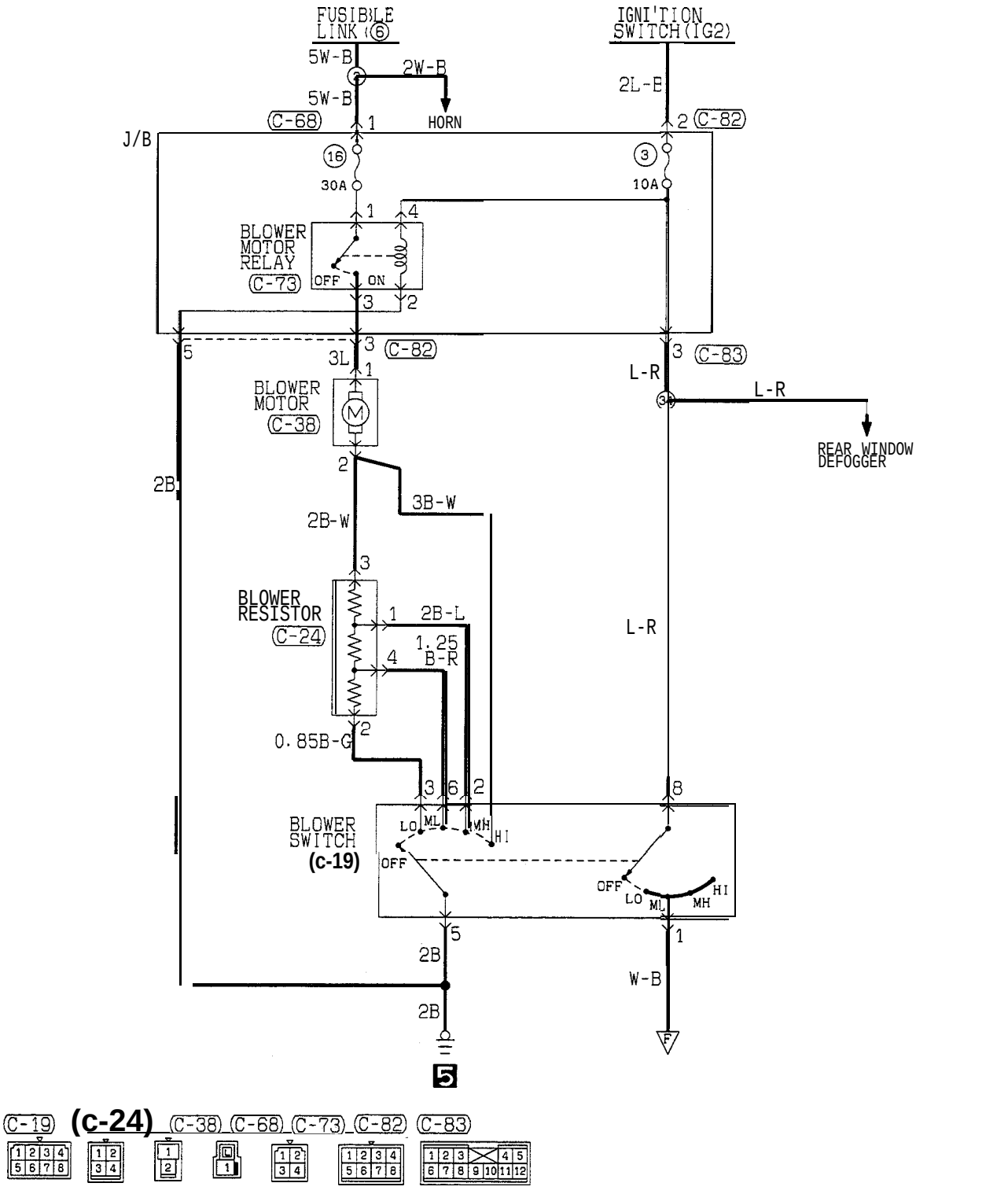

(C-19) **(c-24)** (C-38) (C-68) (C-73) (C-82) (C-83)

HR12M10CA

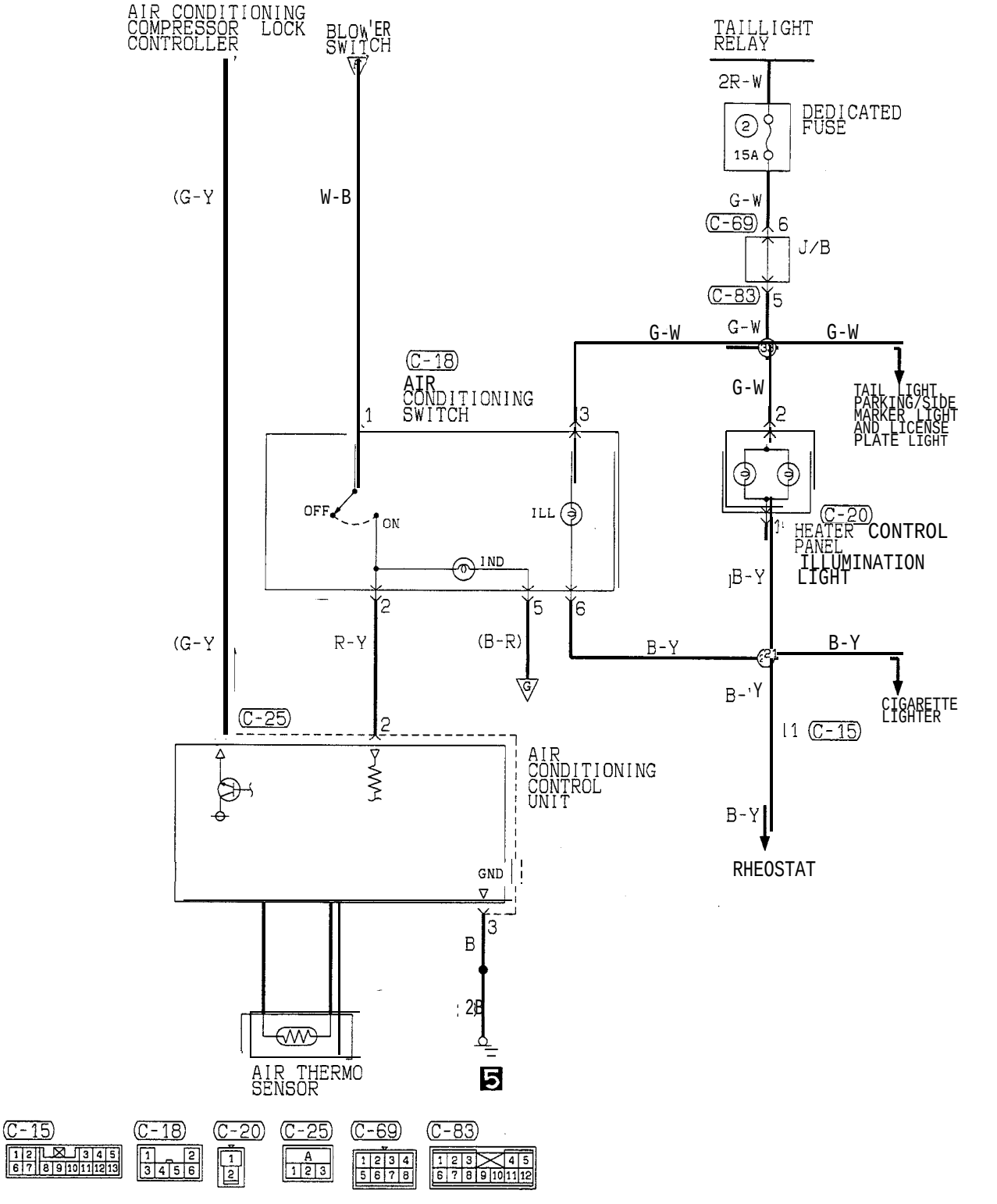
AIR CONDITIONING COMPRESSOR LOCK CONTROLLER
BLOWER SWITCH
TAILLIGHT RELAY
2R-W
DEDICATED FUSE
15A
G-W
C-69
6
J/B
C-83
5
G-W
G-W
G-W
G-W
TAIL LIGHT, PARKING/SIDE MARKER LIGHT AND LICENSE PLATE LIGHT
C-18
AIR CONDITIONING SWITCH
1
3
2
OFF
ON
ILL
IND
C-20
HEATER CONTROL PANEL ILLUMINATION LIGHT
B-Y
2
5
6
(G-Y
R-Y
(B-R)
B-Y
B-Y
B-Y
CIGARETTE LIGHTER
C-15
C-25
AIR CONDITIONING CONTROL UNIT
B-Y
RHEOSTAT
GND
3
B
2B
AIR THERMO SENSOR
5
C-15
C-18
C-20
C-25
C-69
C-83

HR12M10CB

FULL AUTO AIR CONDITIONING CIRCUIT (1992 MODEL)

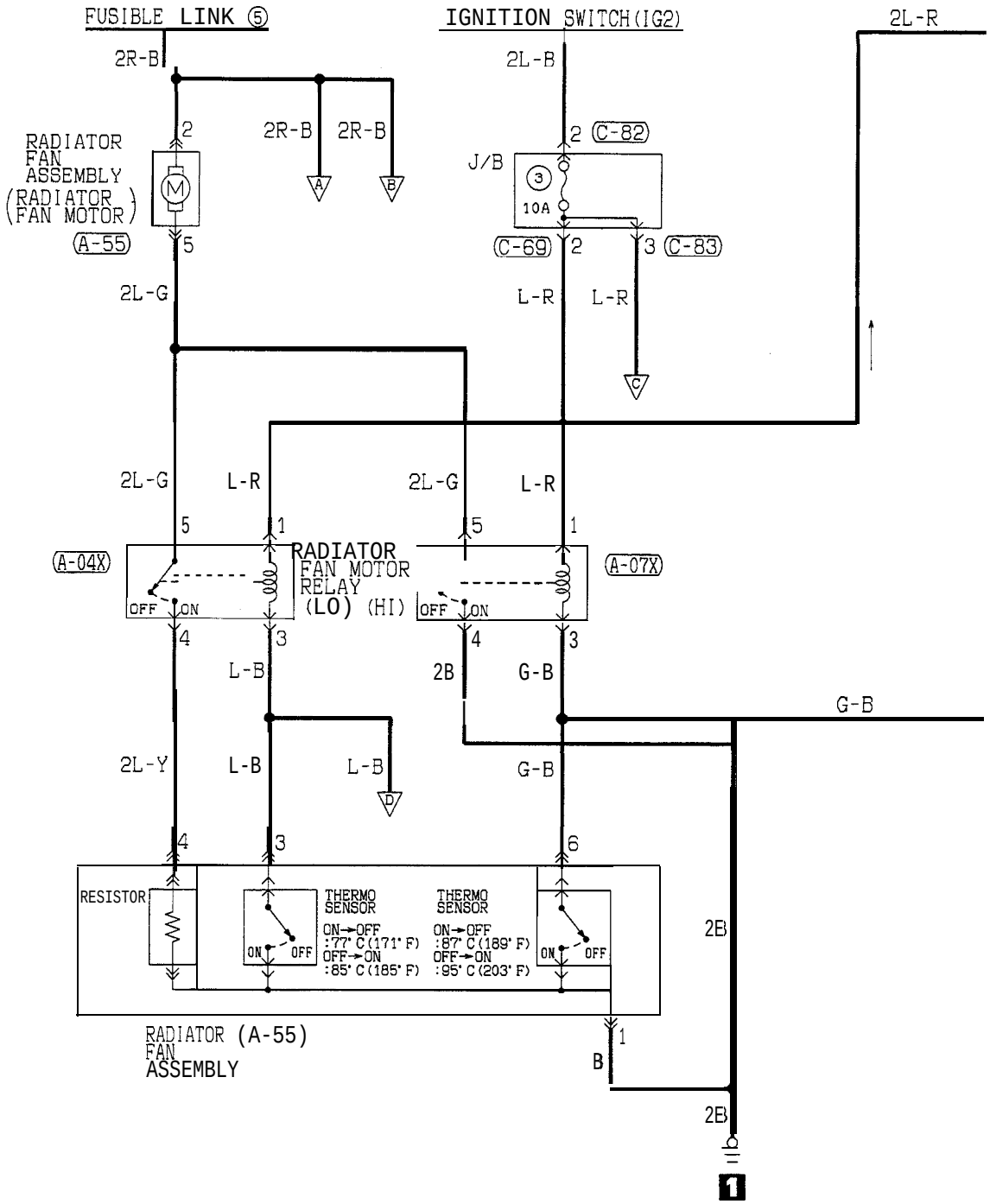

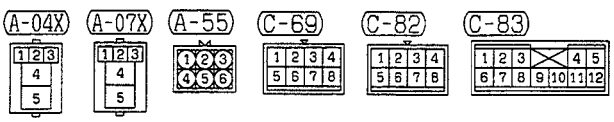

HR12M05AA

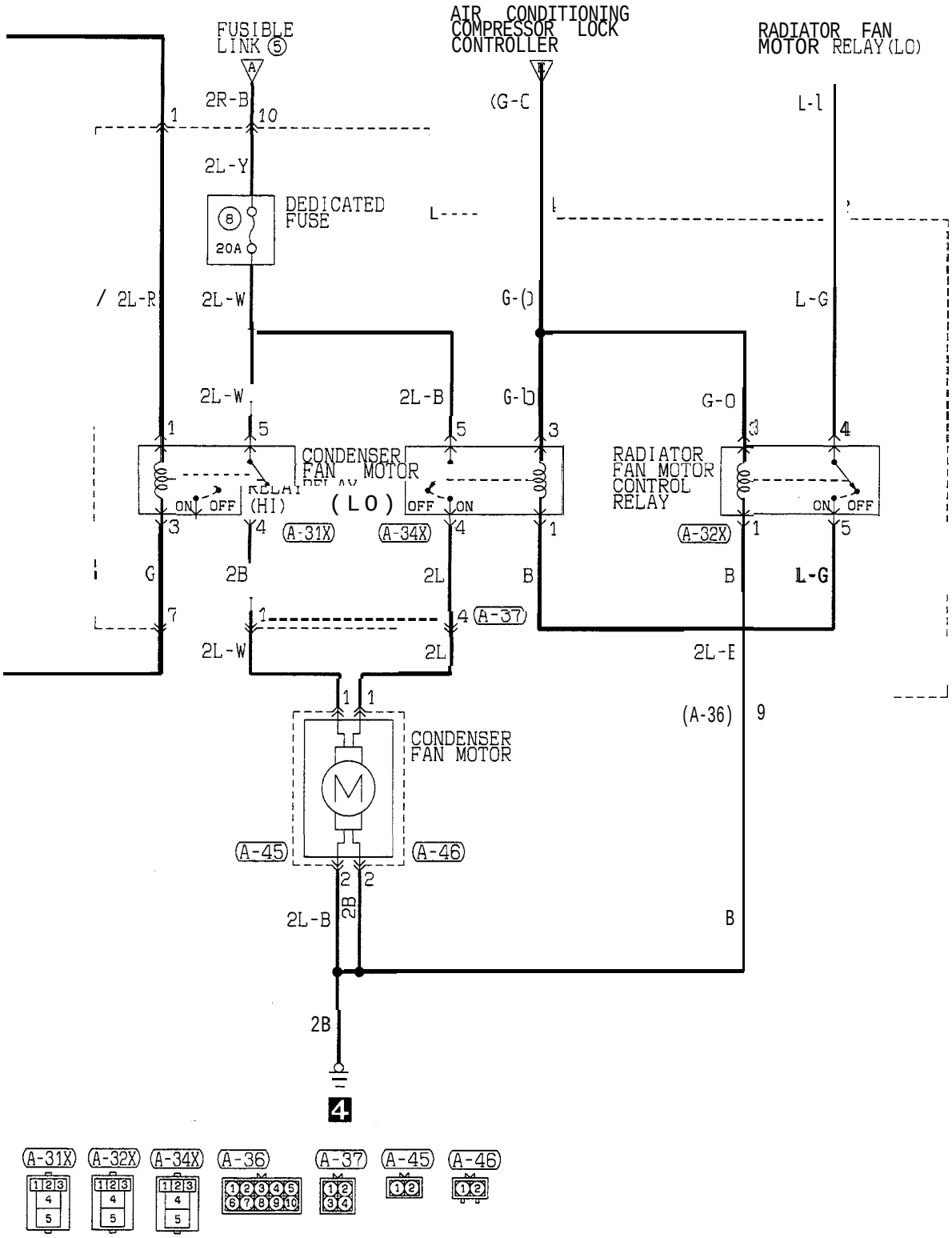

HR12M05AB

TSB Revision

FULL AUTO AIR CONDITIONING CIRCUIT (1992 MODEL) (CONTINUED)

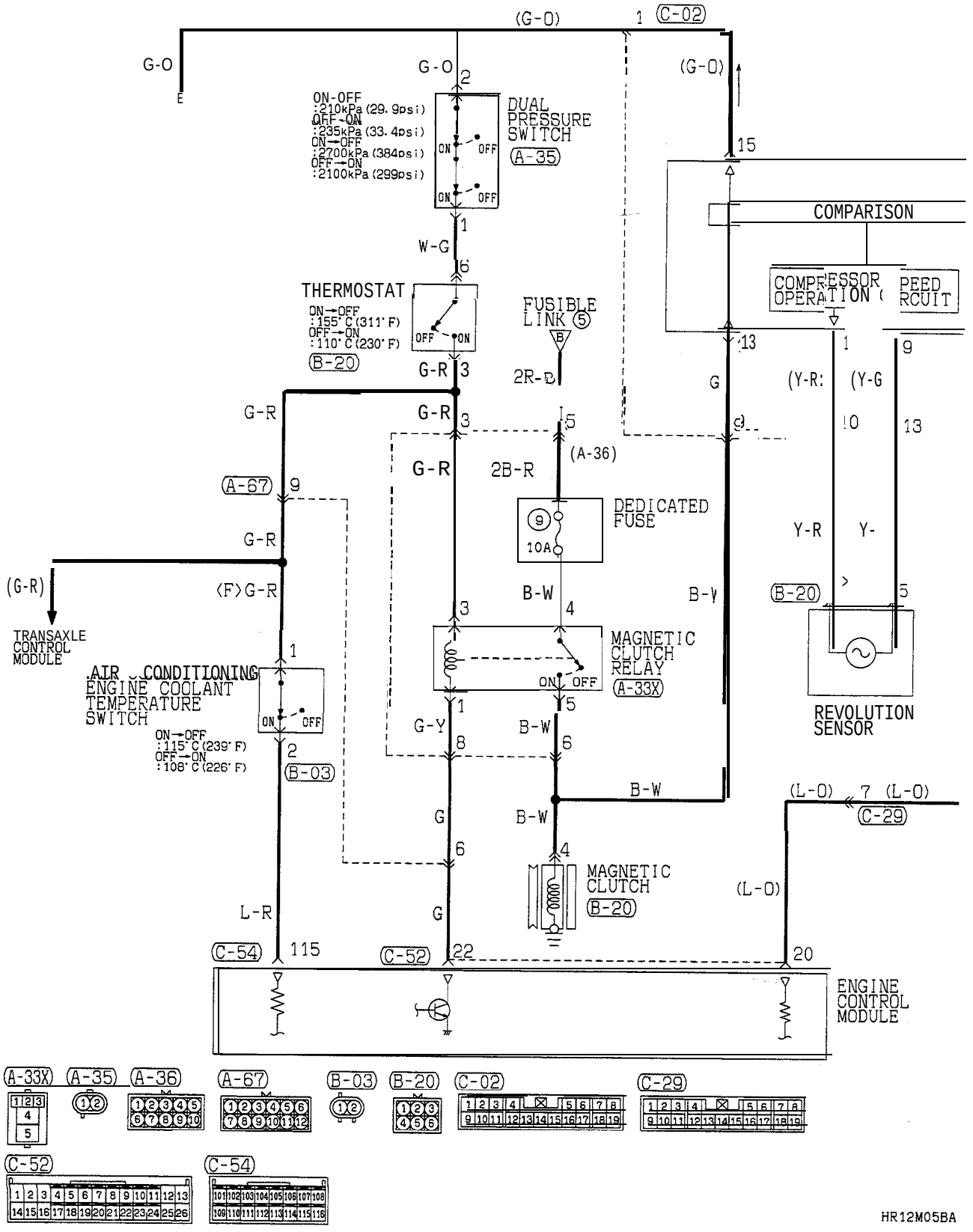

TSB Revision

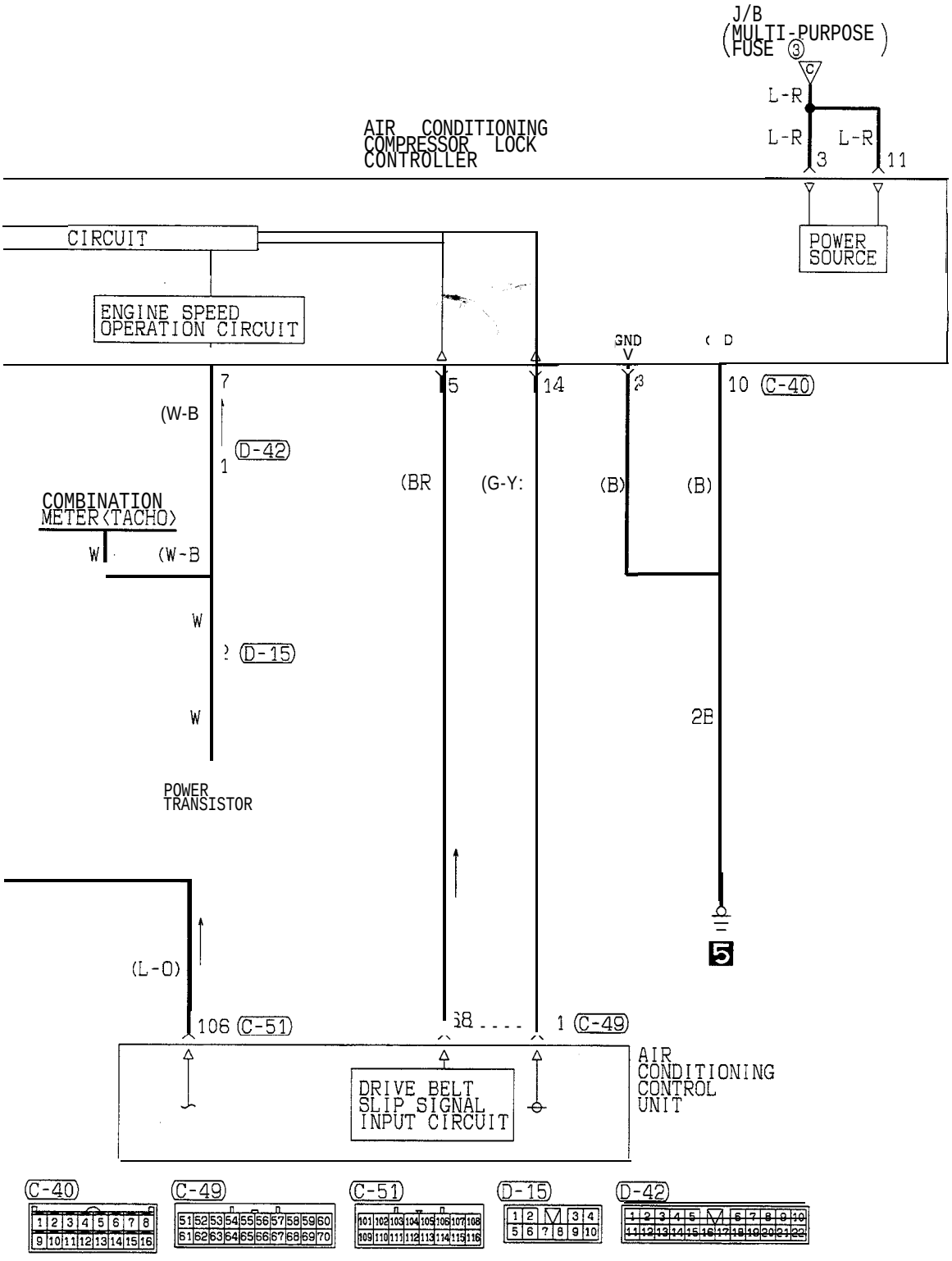
J/B
(MULTI-PURPOSE FUSE 3)
L-R
L-R
L-R
3
11
POWER SOURCE
AIR CONDITIONING COMPRESSOR LOCK CONTROLLER
CIRCUIT
ENGINE SPEED OPERATION CIRCUIT
GND
10 (C-40)
(W-B
(D-42)
(BR
(G-Y:
(B)
(B)
COMBINATION METER (TACHO)
W
(W-B
W
(D-15)
W
2B
POWER TRANSISTOR
5
(L-O)
106 (C-51)
1 (C-49)
DRIVE BELT SLIP SIGNAL INPUT CIRCUIT
AIR CONDITIONING CONTROL UNIT
(C-40)
(C-49)
(C-51)
(D-15)
(D-42)

HR12M05BB

FULL AUTO AIR CONDITIONING CIRCUIT (1992 MODEL) (CONTINUED)

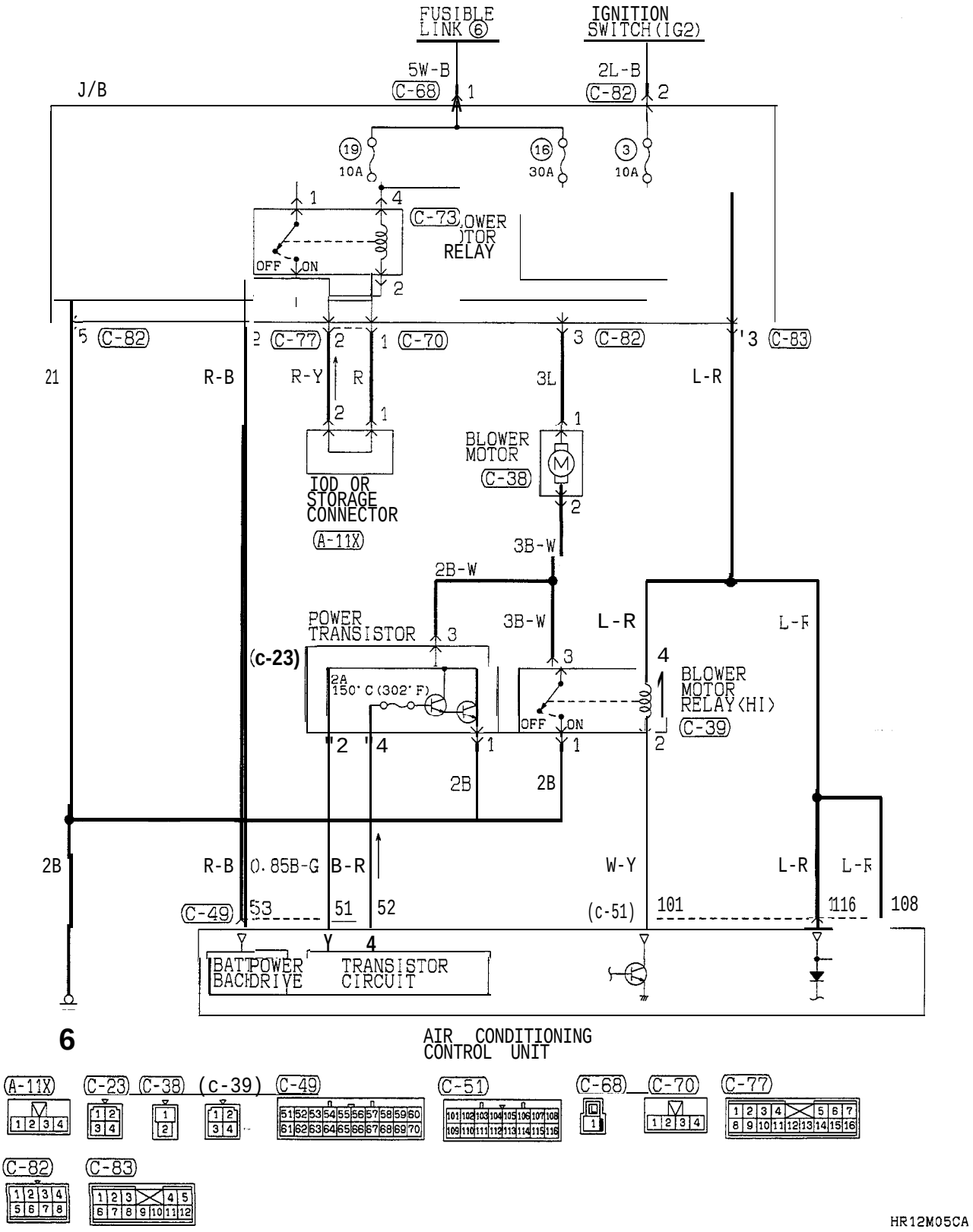

TSB Revision

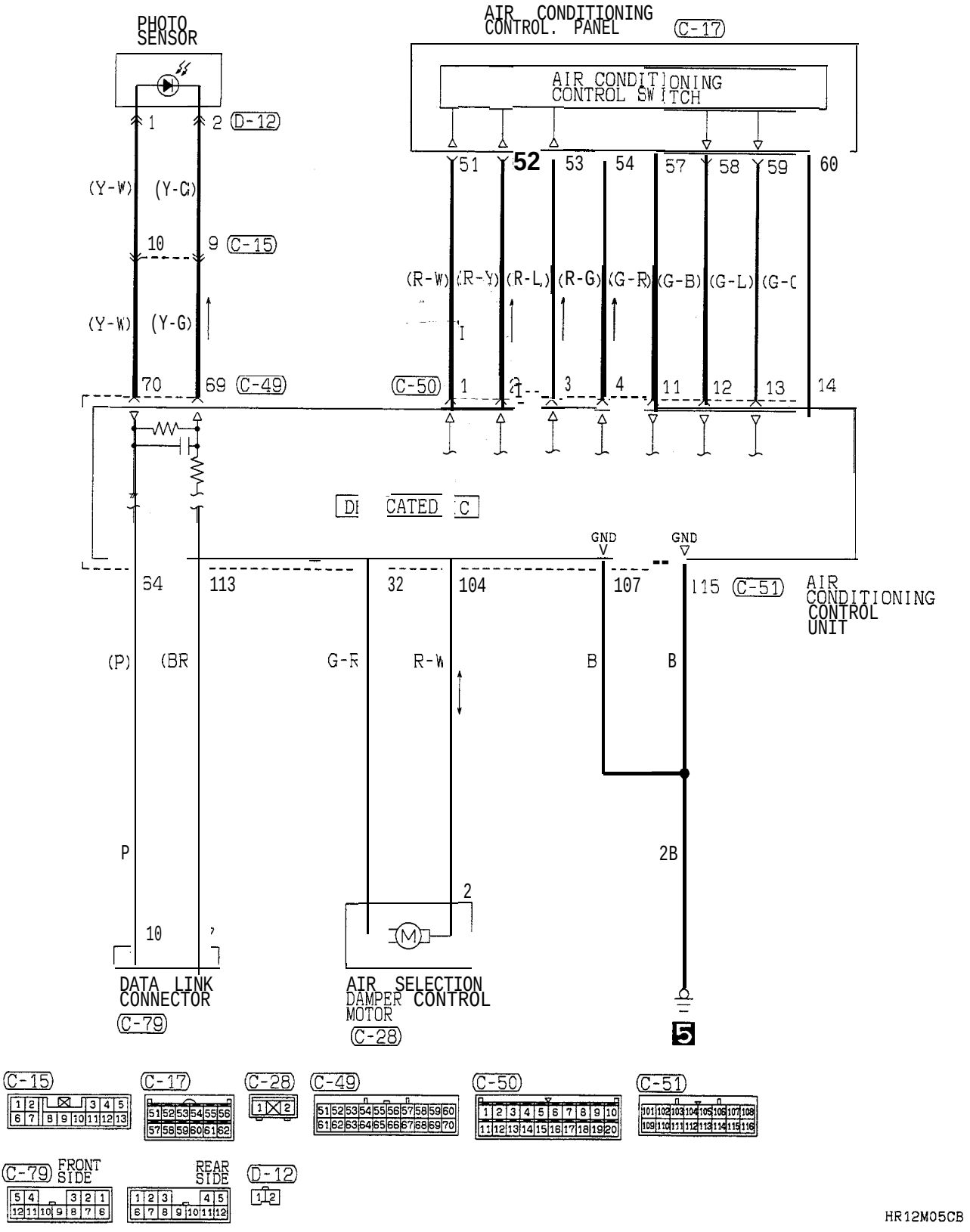

TSB Revision

FULL AUTO AIR CONDITIONING CIRCUIT (1992 MODEL) (CONTINUED)

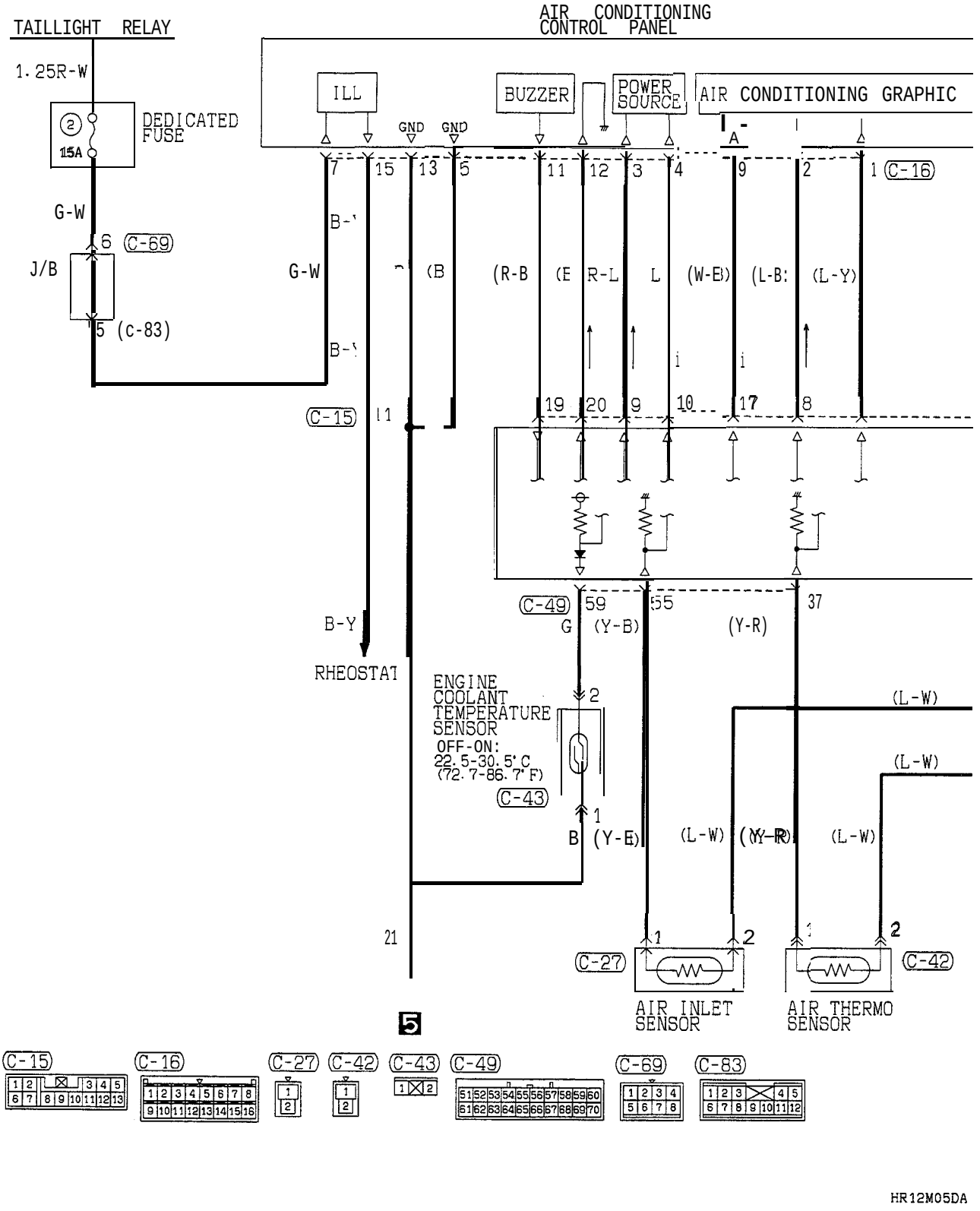

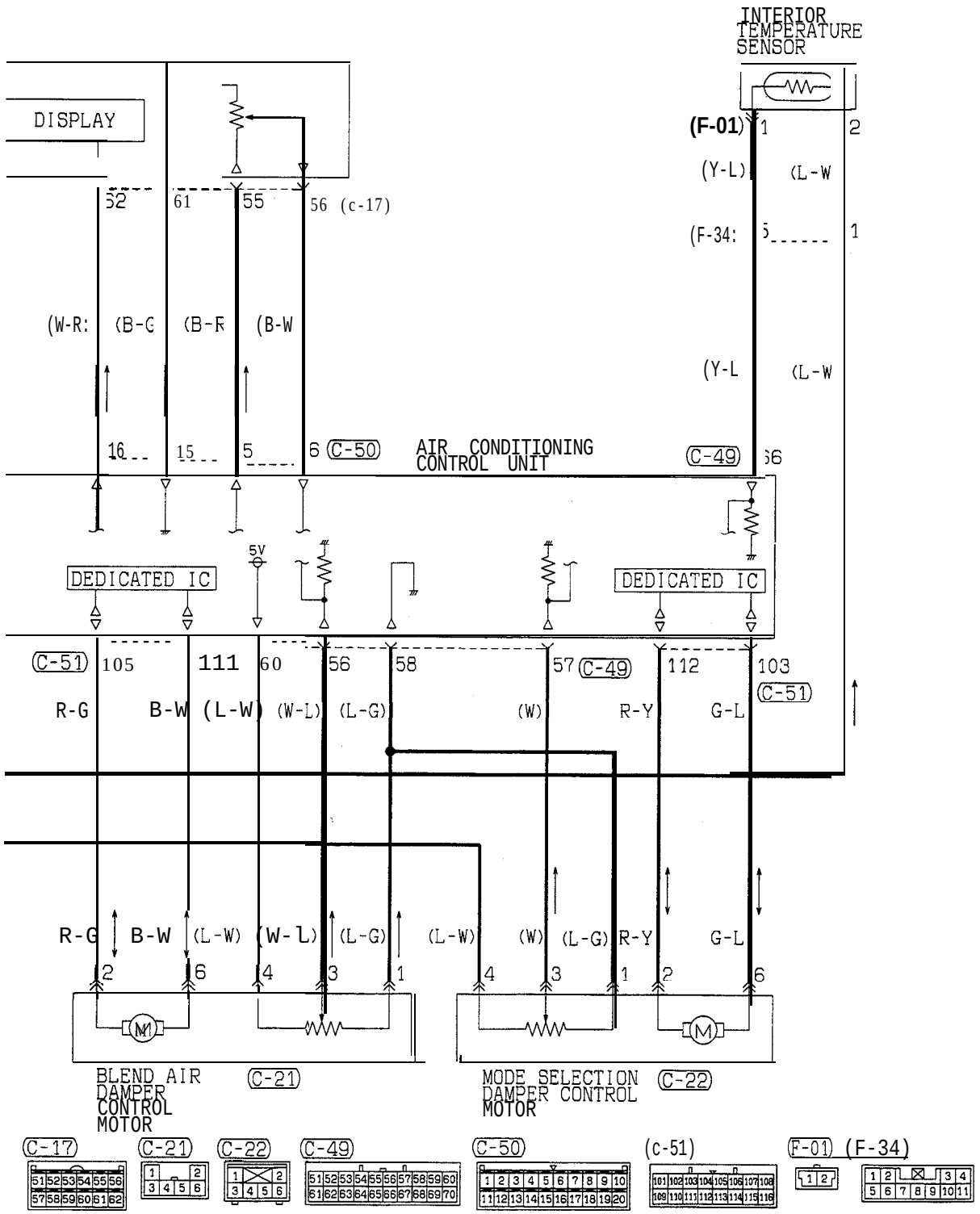

TSB Revision

FULL AUTO AIR CONDITIONING CIRCUIT (1993 MODELS)

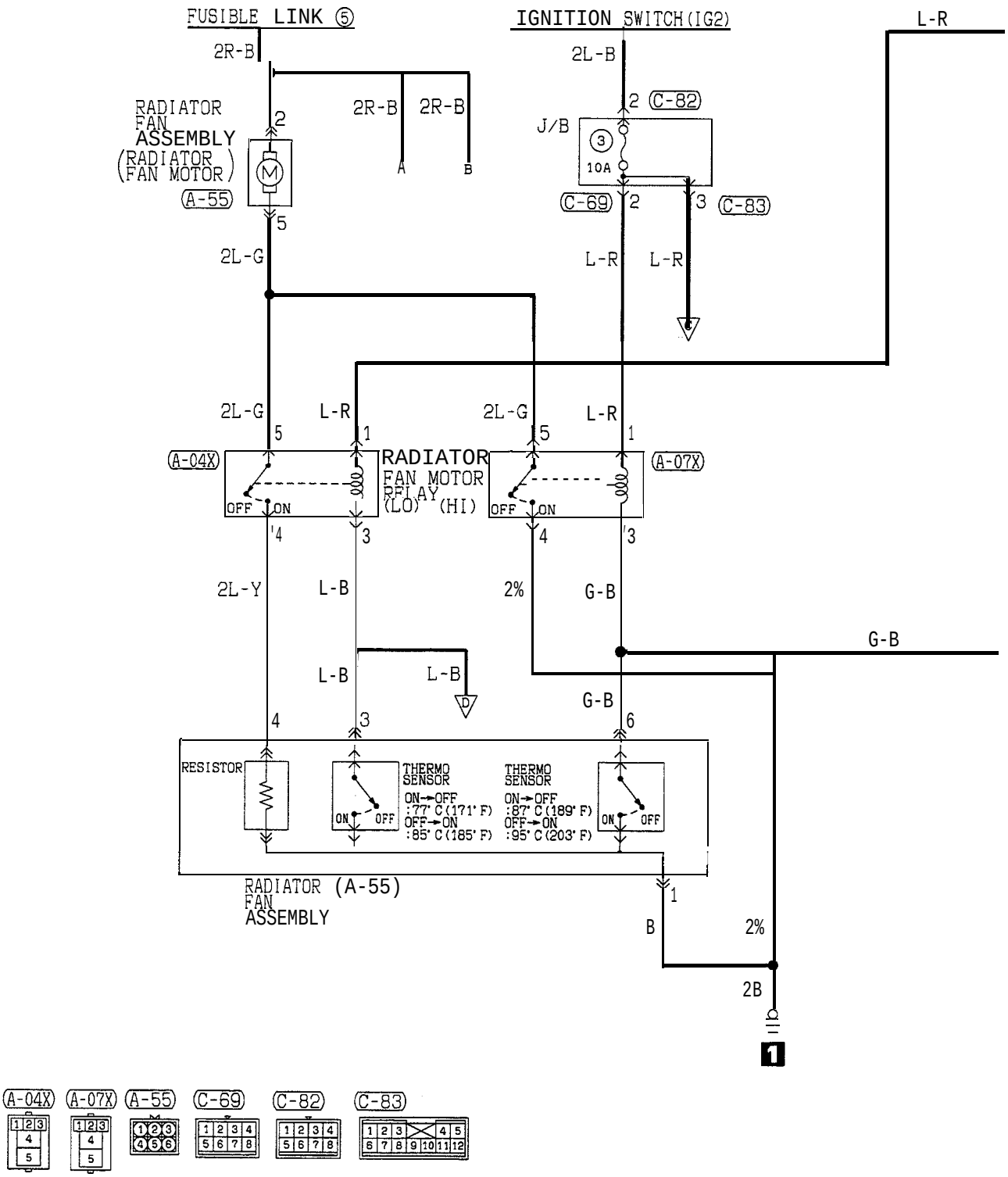

HR12M06AA

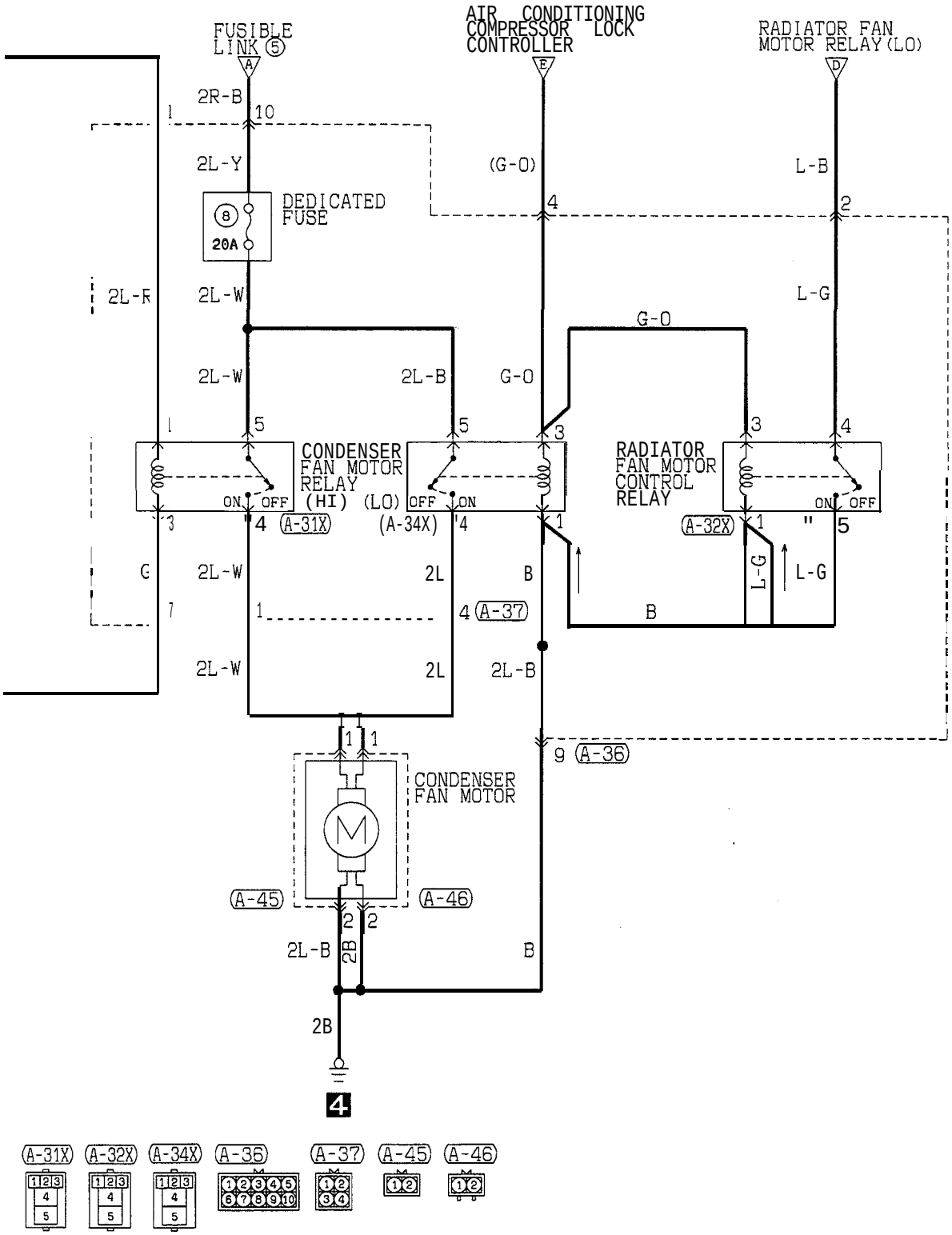

HR12M06AB

TSB Revision

FULL AUTO AIR CONDITIONING CIRCUIT (1993 MODELS) (CONTINUED)

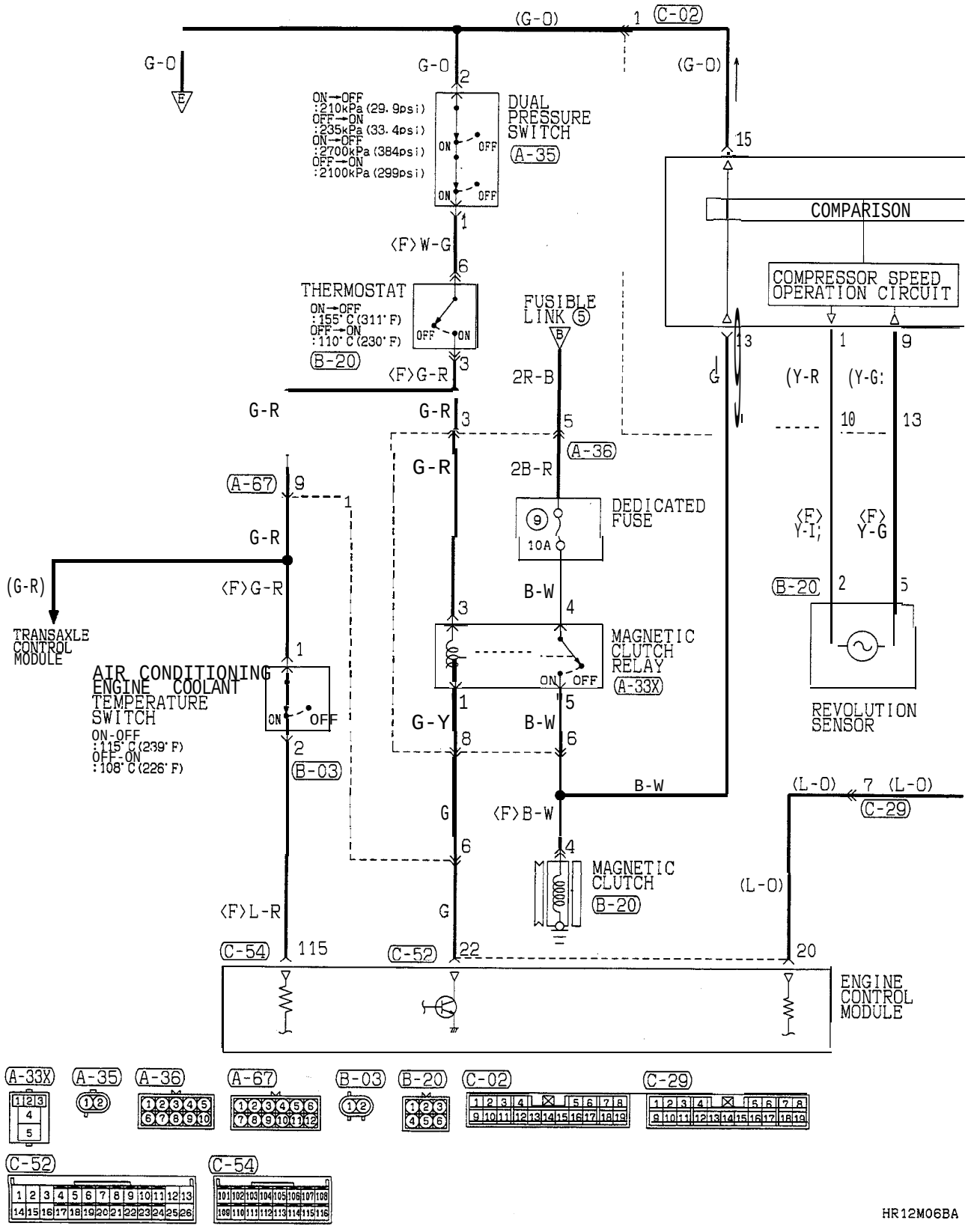

TSB Revision

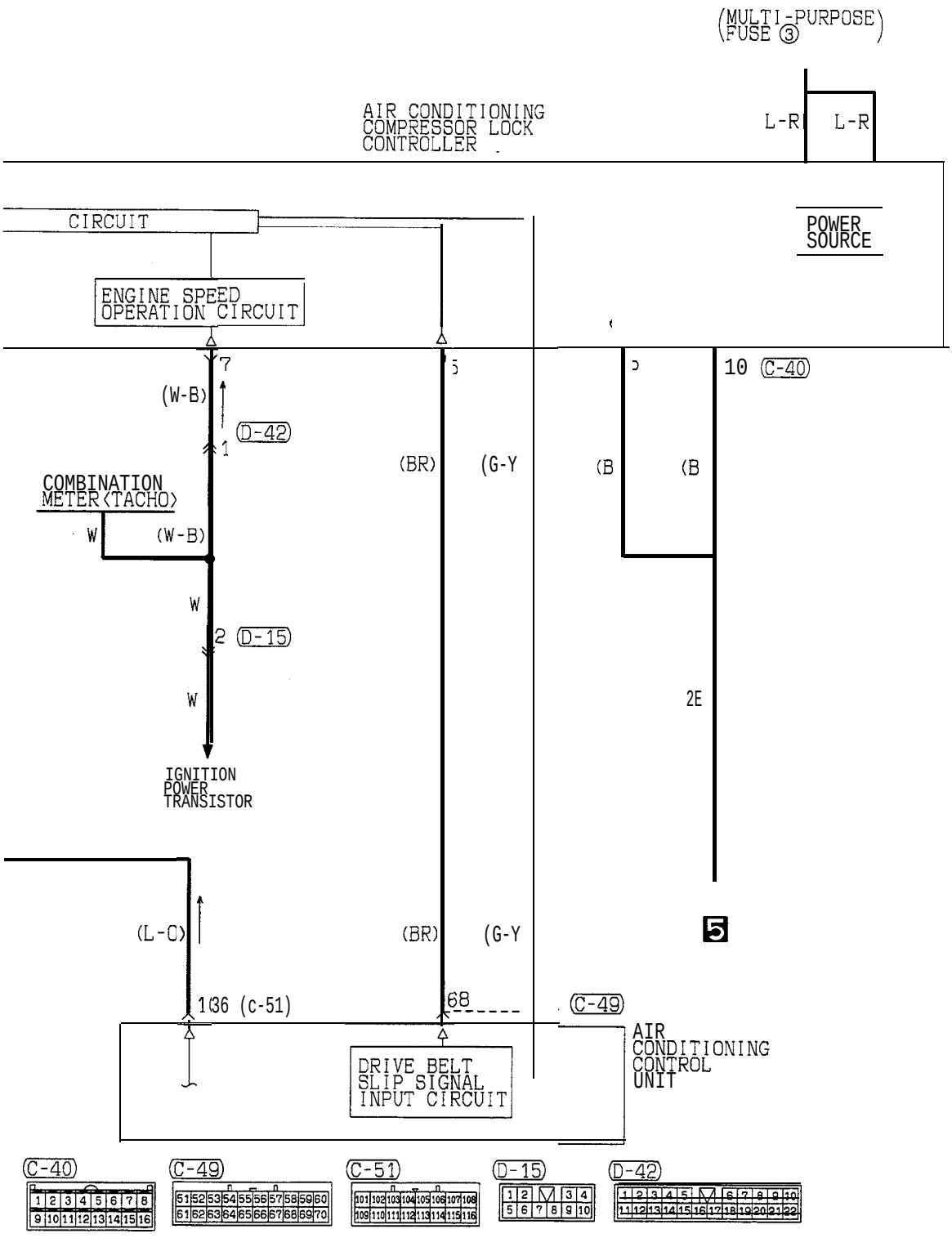

HR12M06BB

TSB Revision

FULL AUTO AIR CONDITIONING CIRCUIT (1993 MODELS) (CONTINUED)

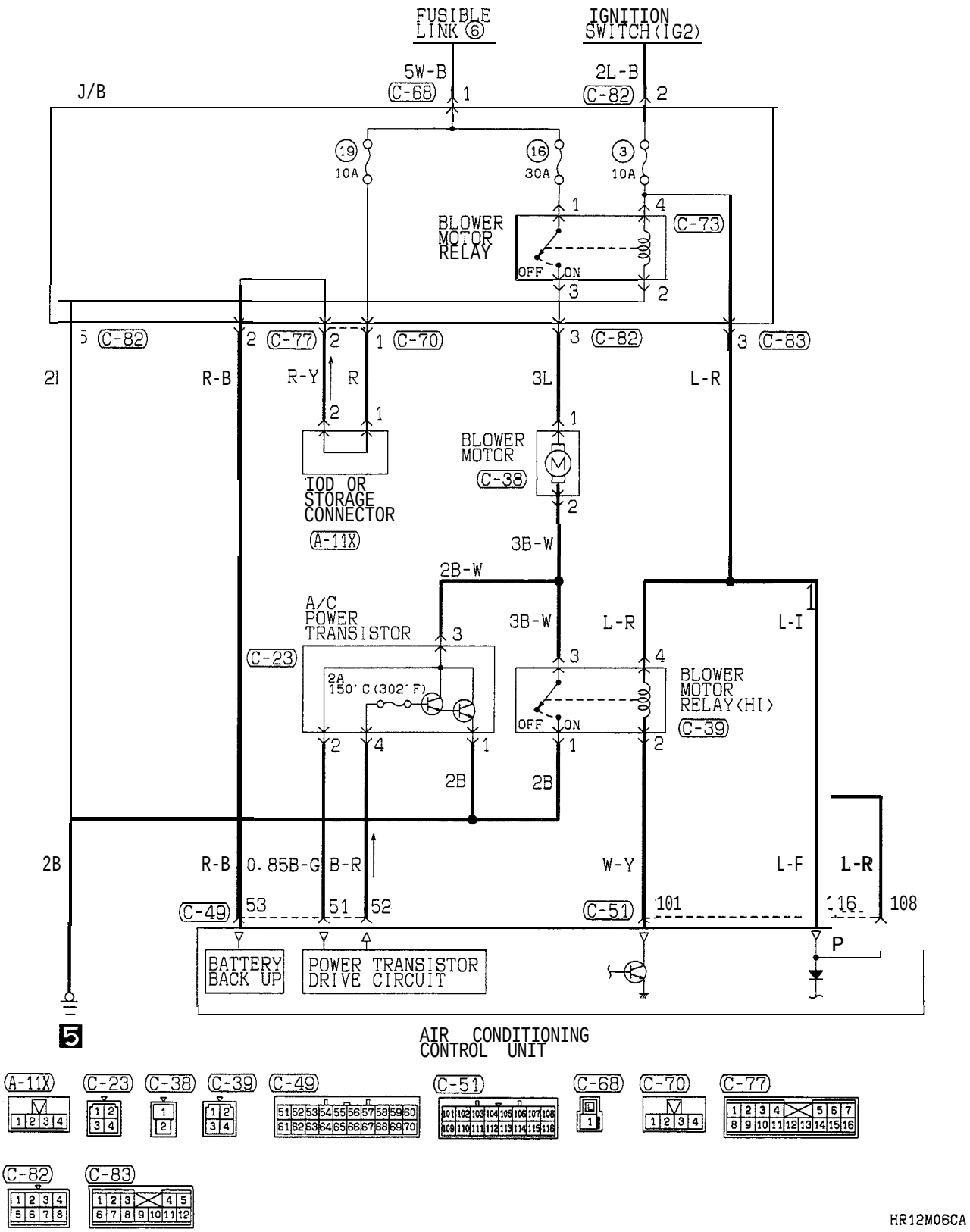

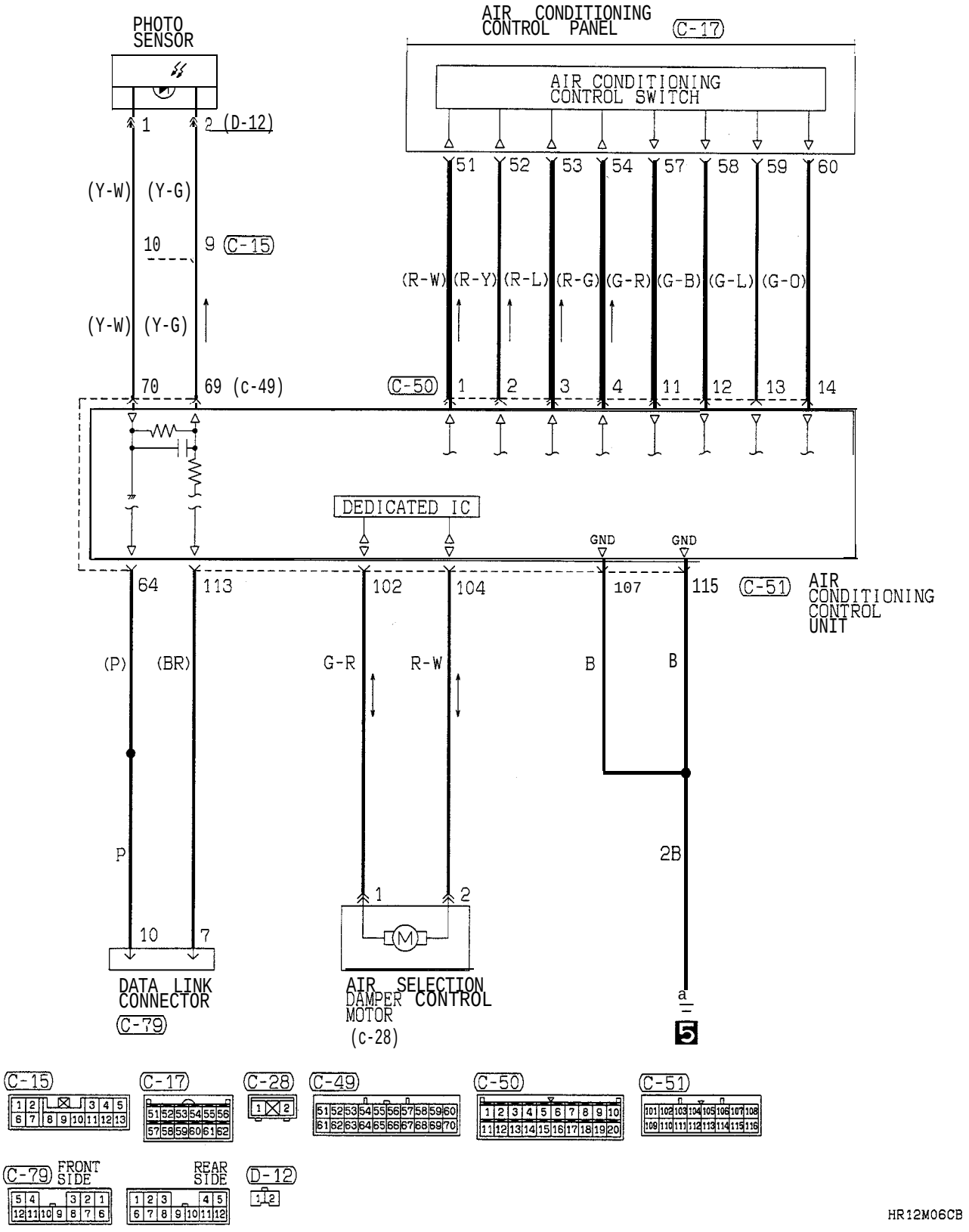

TSB Revision

FULL AUTO AIR CONDITIONING CIRCUIT (1993 MODELS) (CONTINUED)

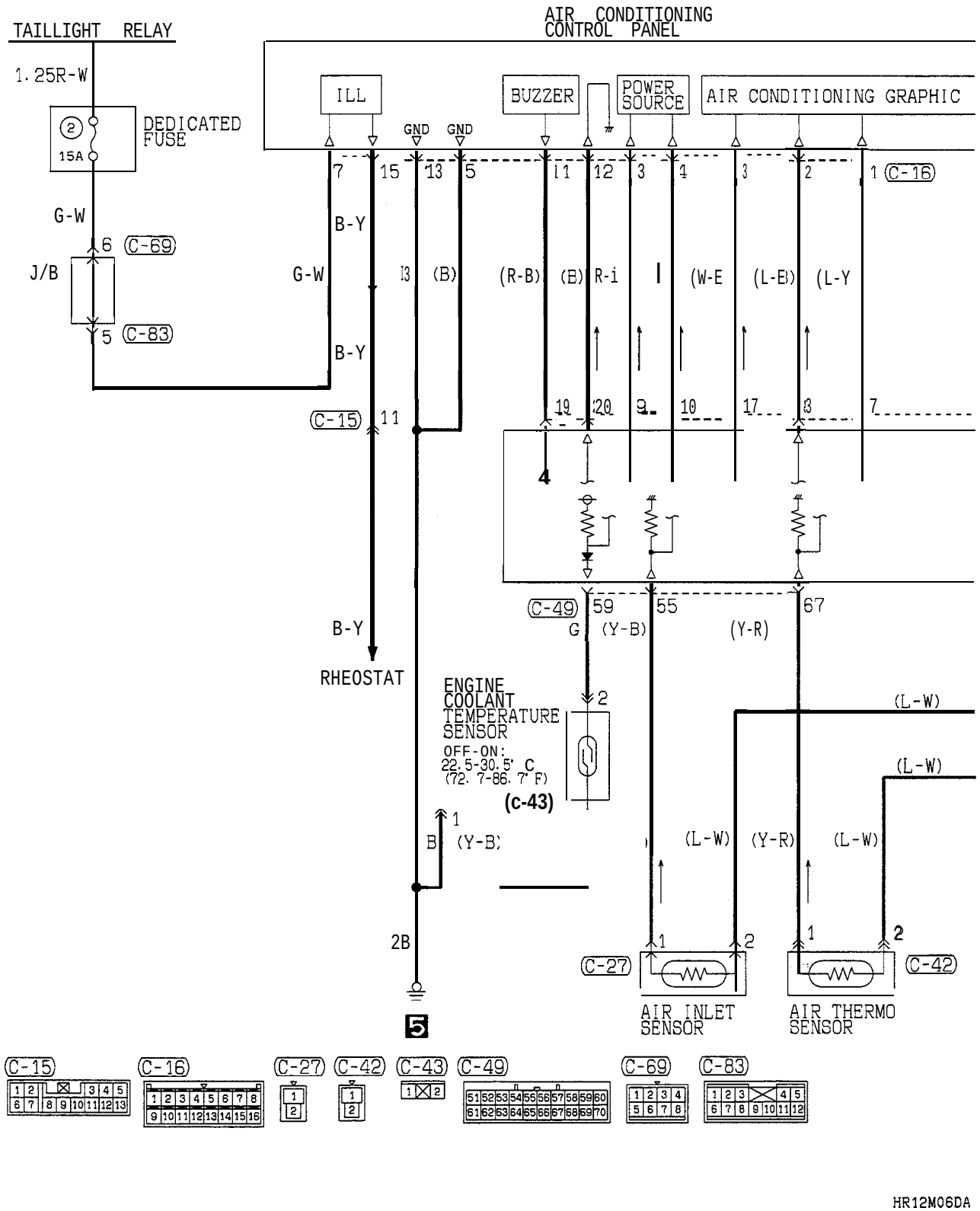

HR12M06DA

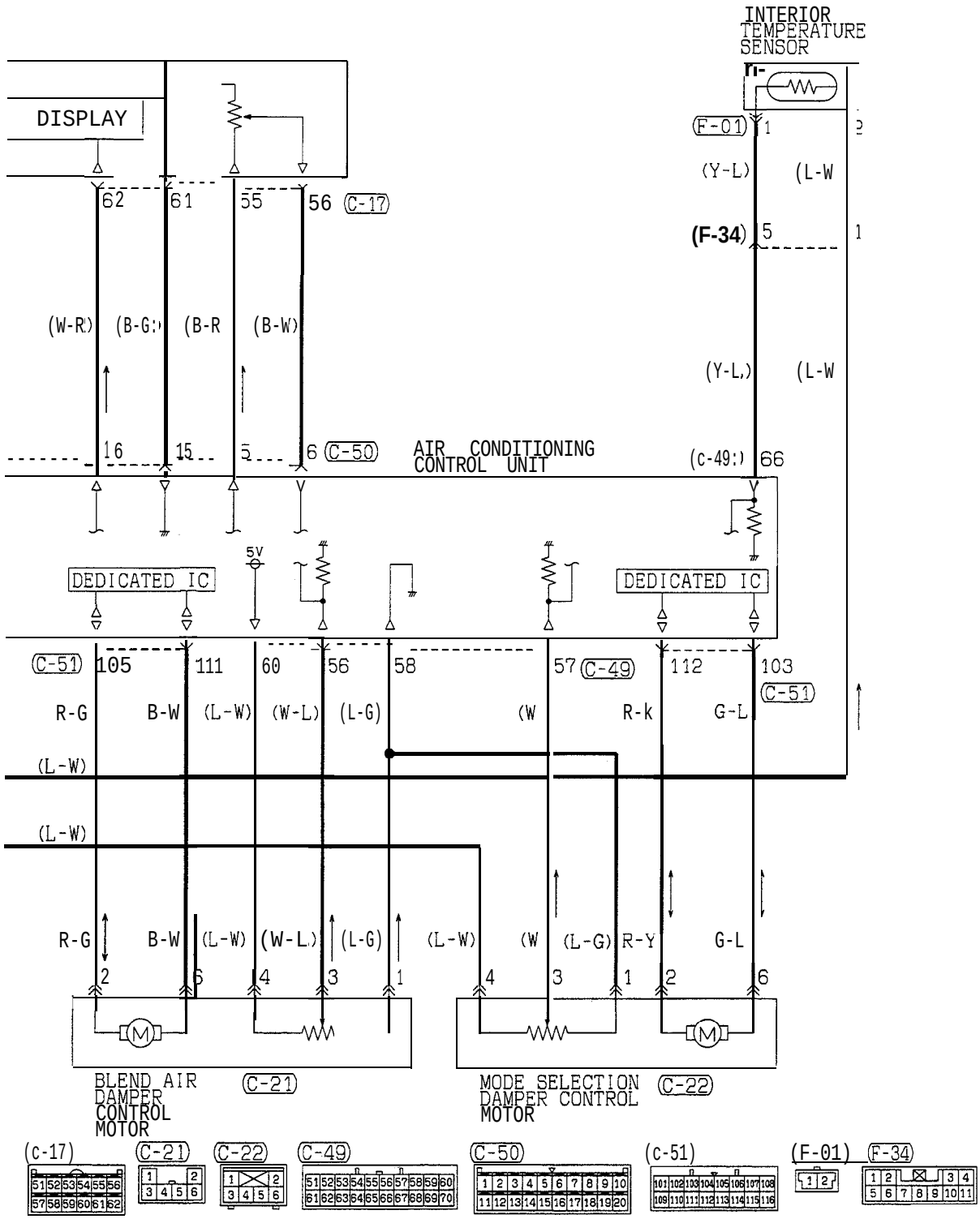

HR12M06DB

TSB Revision

FULL AUTO AIR CONDITIONING CIRCUIT (1994, 1995 MODELS)

<NON TURBO> (FEDERAL)

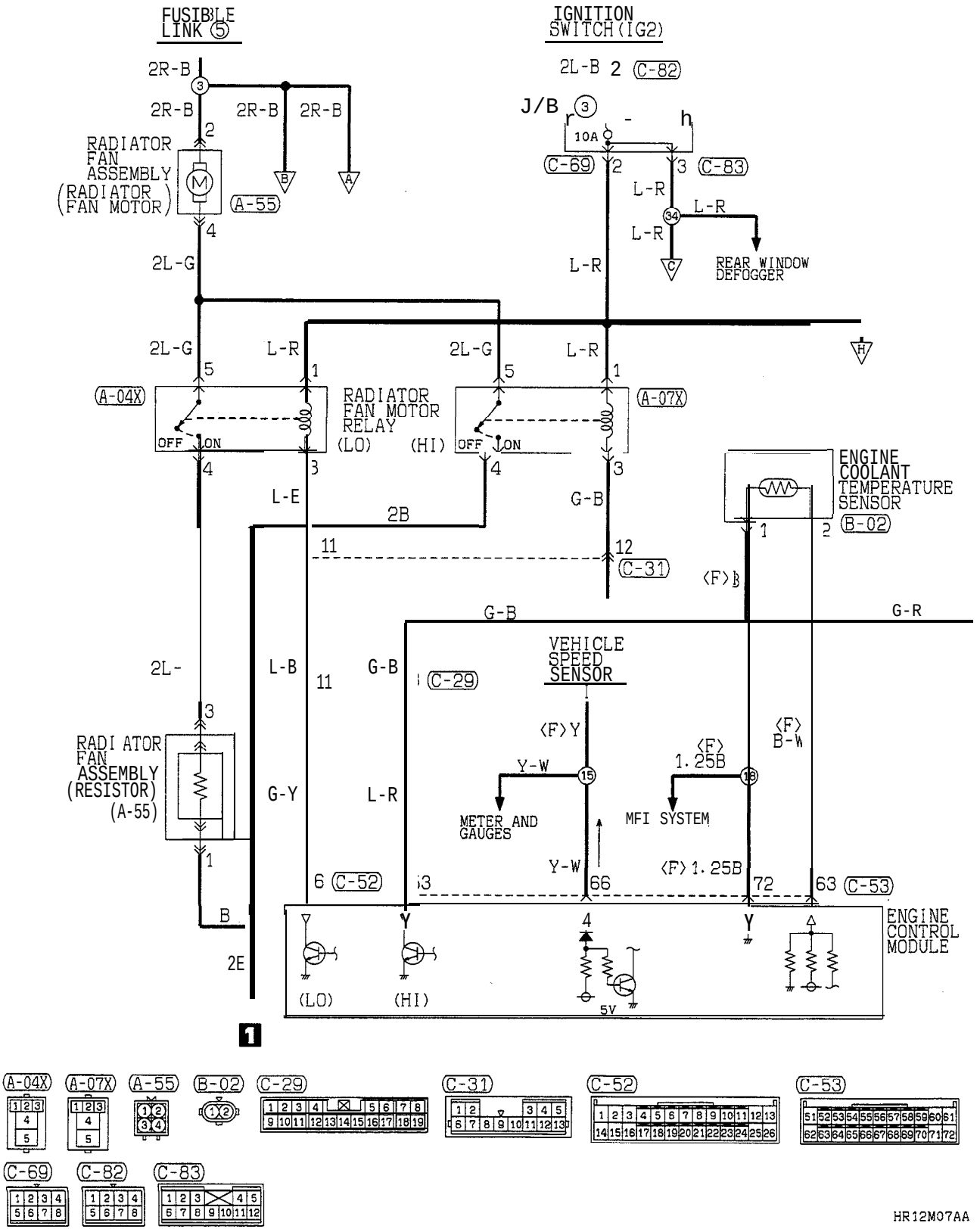

TSB Revision

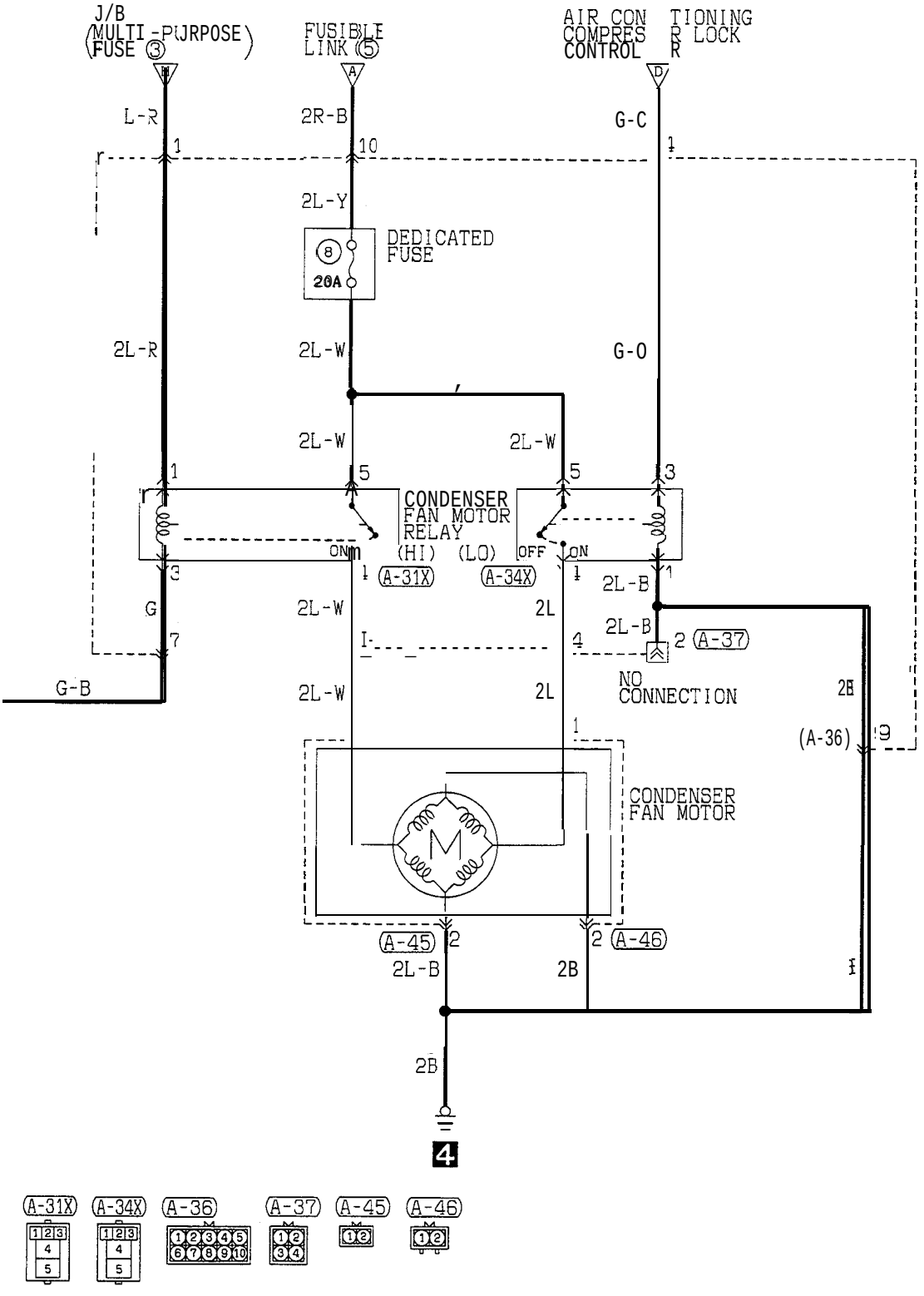
J/B
(MULTI-PURPOSE FUSE 3)
FUSIBLE LINK 5
AIR CONDITIONING COMPRESSOR LOCK CONTROL
L-R
2R-B
G-C
2L-Y
DEDICATED FUSE
8
20A
2L-R
2L-W
G-O
2L-W
2L-W
CONDENSER FAN MOTOR RELAY
ON
(HI)
(LO)
OFF
ON
(A-31X)
(A-34X)
2L-B
G
2L-W
2L
2L-B
2 (A-37)
NO CONNECTION
G-B
2L-W
2L
2B
(A-36)
CONDENSER FAN MOTOR
(A-45) 2
2 (A-46)
2L-B
2B
2B
4

(A-31X)
(A-34X)
(A-36)
(A-37)
(A-45)
(A-46)

HR12M07AB

FULL AUTO AIR CONDITIONING CIRCUIT (1994, 1995 MODELS) <NON TURBO> (FEDERAL) (CONTINUED)

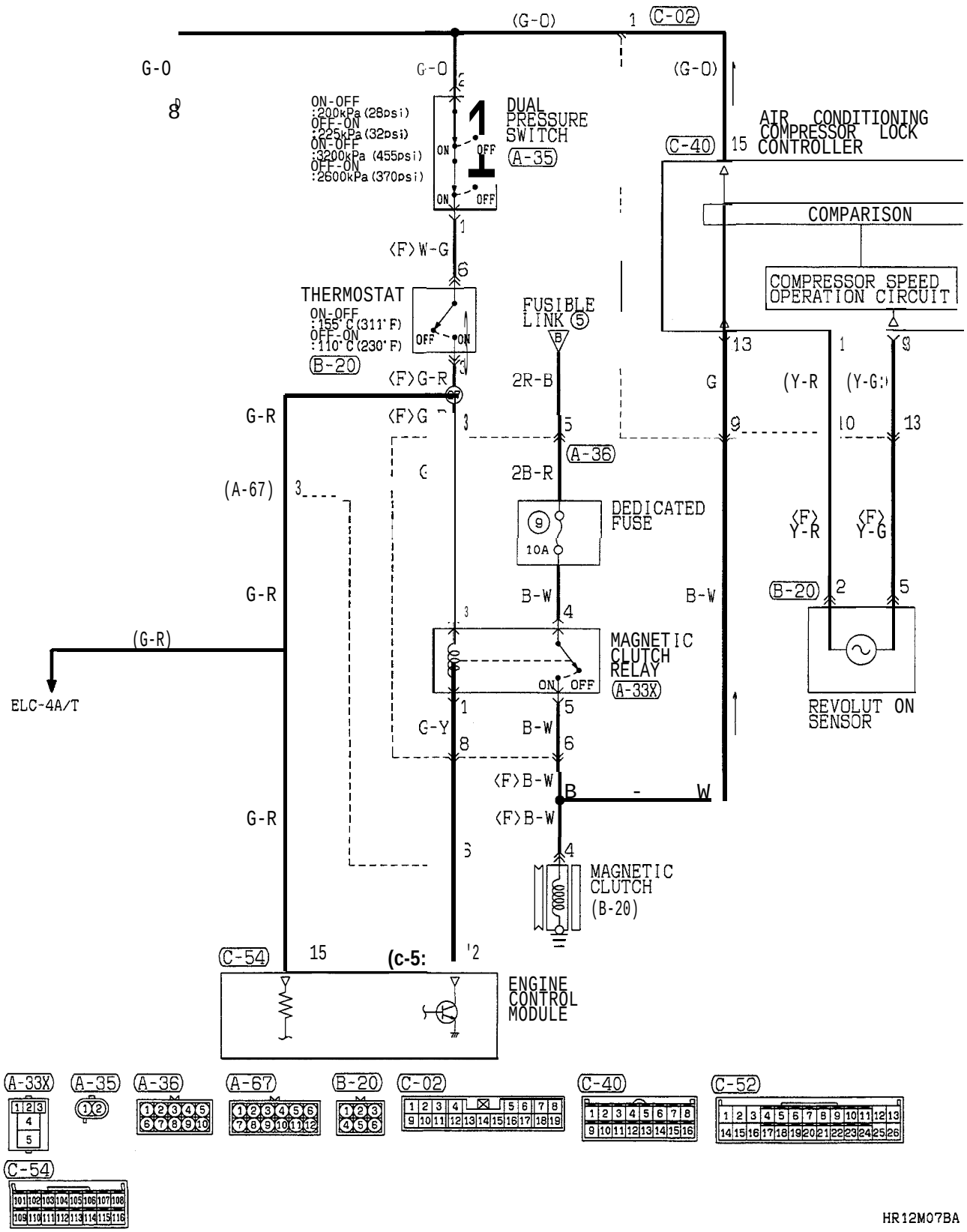

TSB Revision

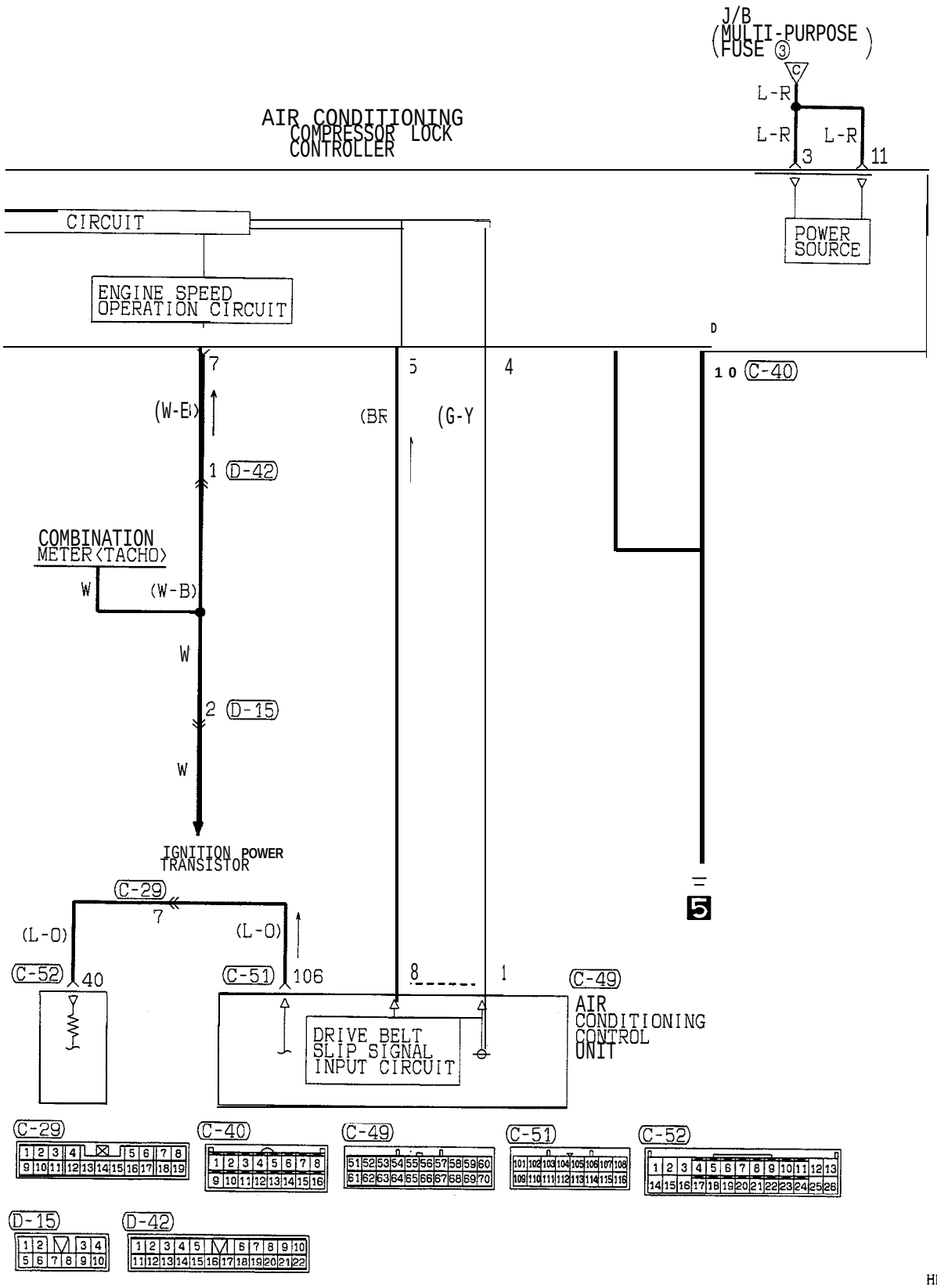

HR12M07BB

TSB Revision

FULL AUTO AIR CONDITIONING CIRCUIT (1994, 1995 MODELS) <NON TURBO> (FEDERAL) (CONTINUED)

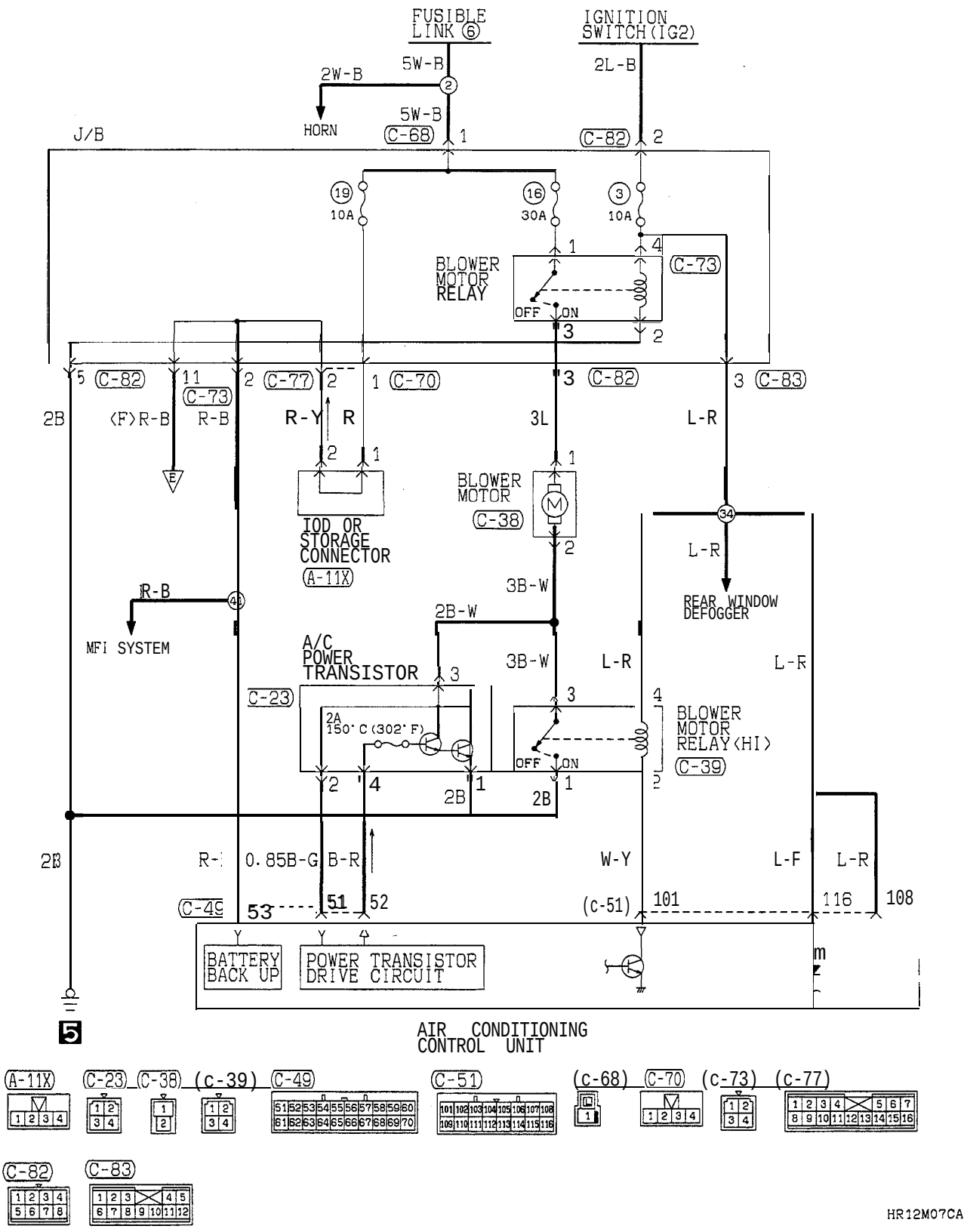

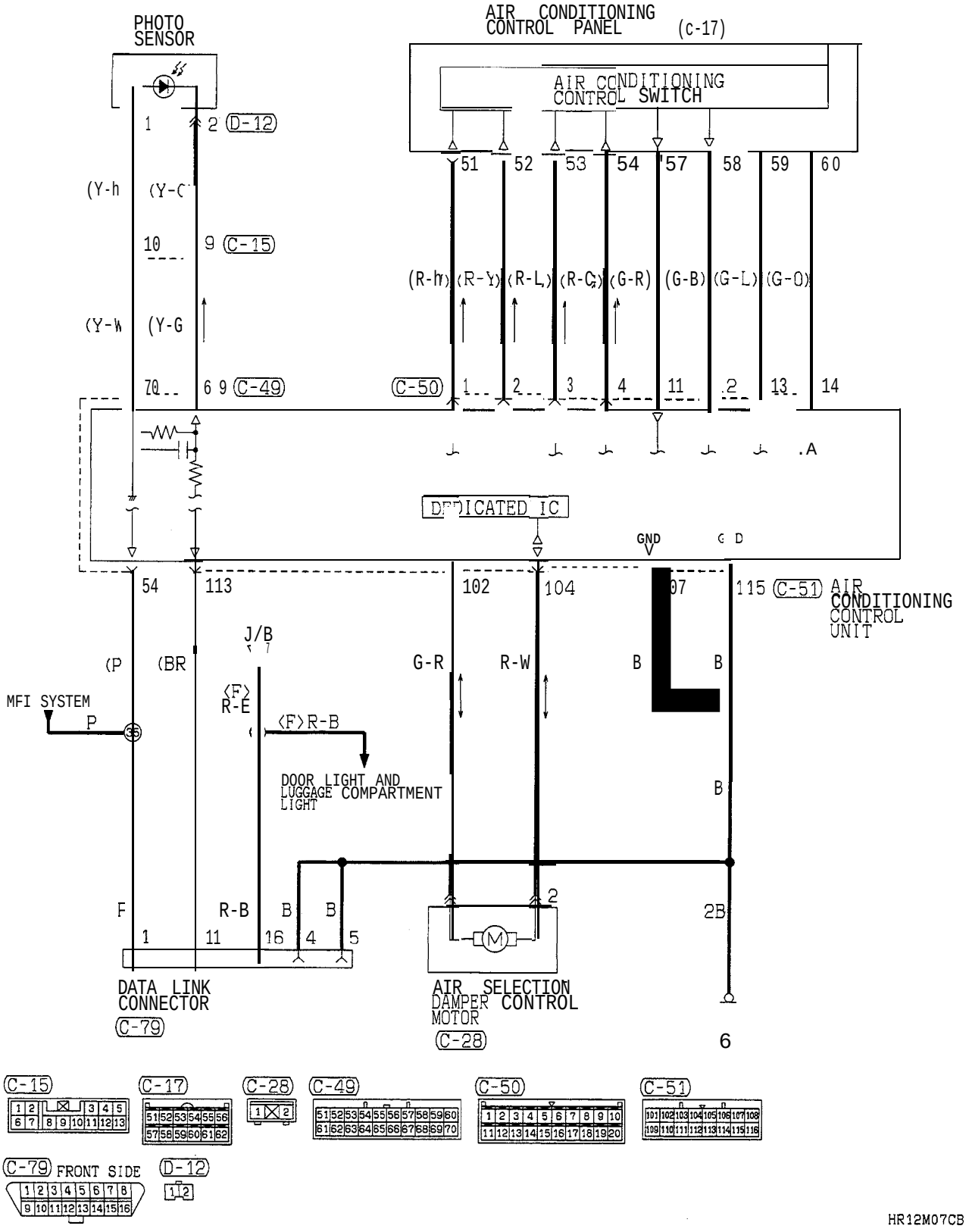

TSB Revision

FULL AUTO AIR CONDITIONING CIRCUIT (1994, 1995 MODELS) <NON TURBO> (FEDERAL) (CONTINUED)

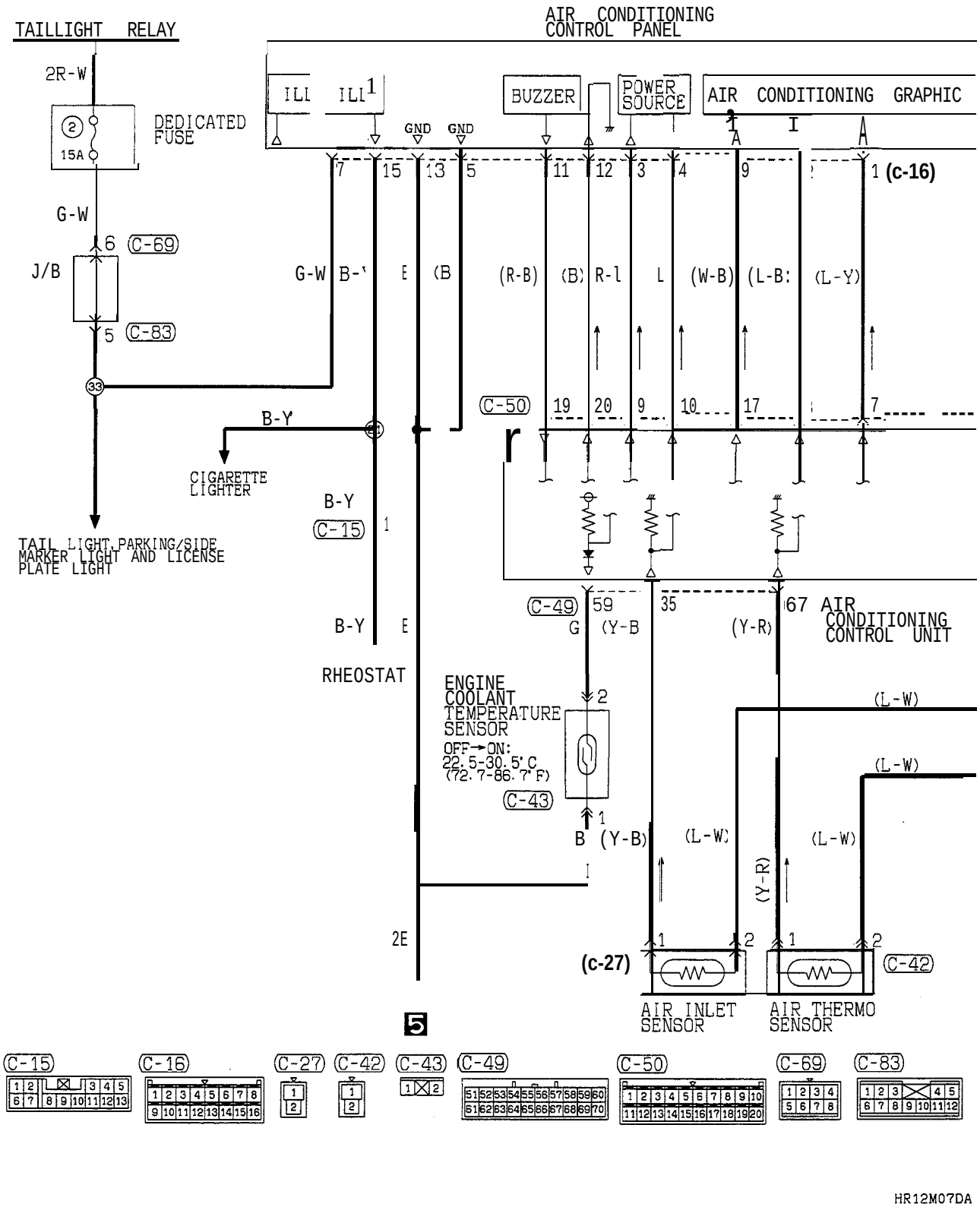

TSB Revision

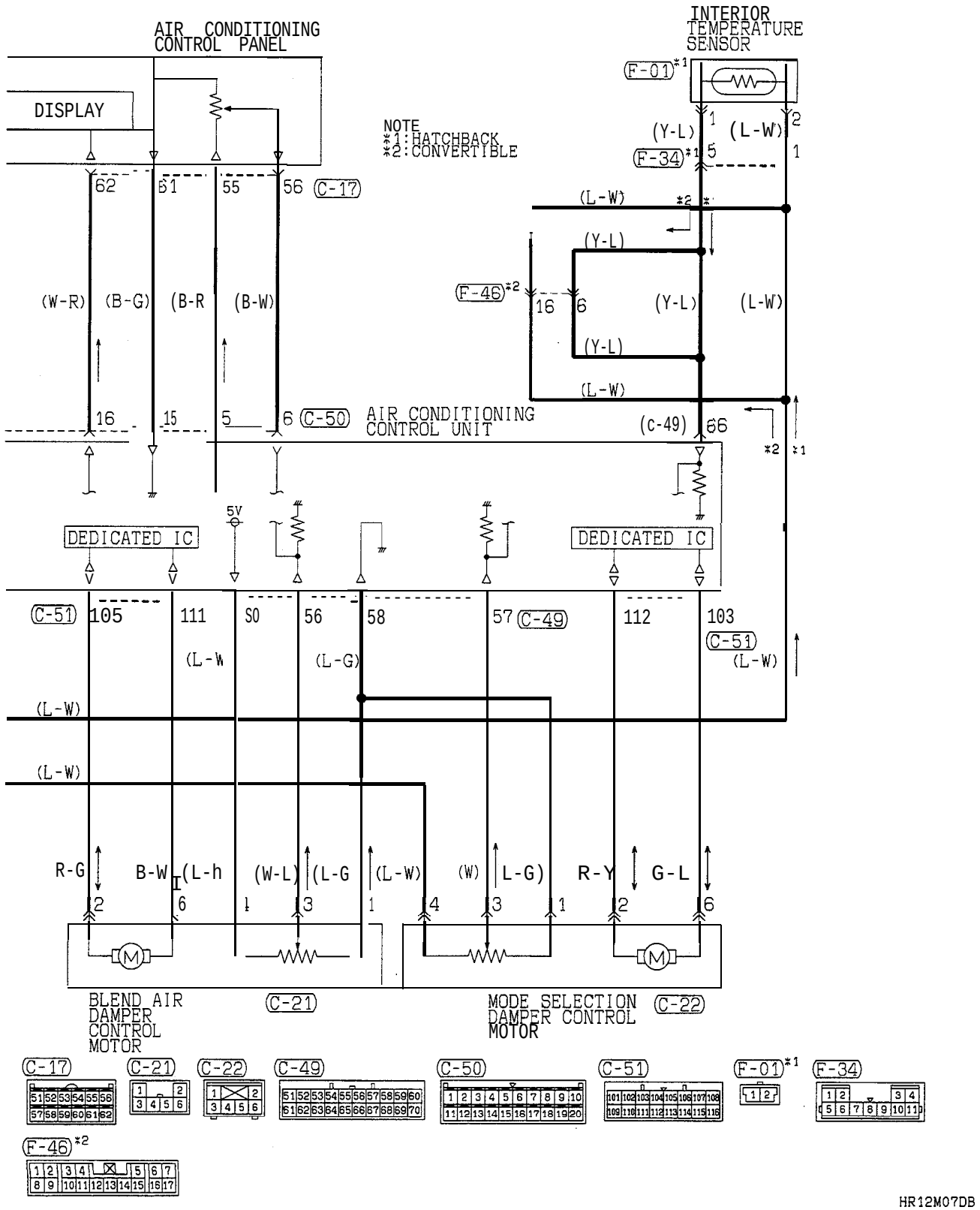

TSB Revision

FULL AUTO AIR CONDITIONING CIRCUIT (1994, 1995 MODELS)

<TURBO, NON TURBO (CALIFORNIA)>

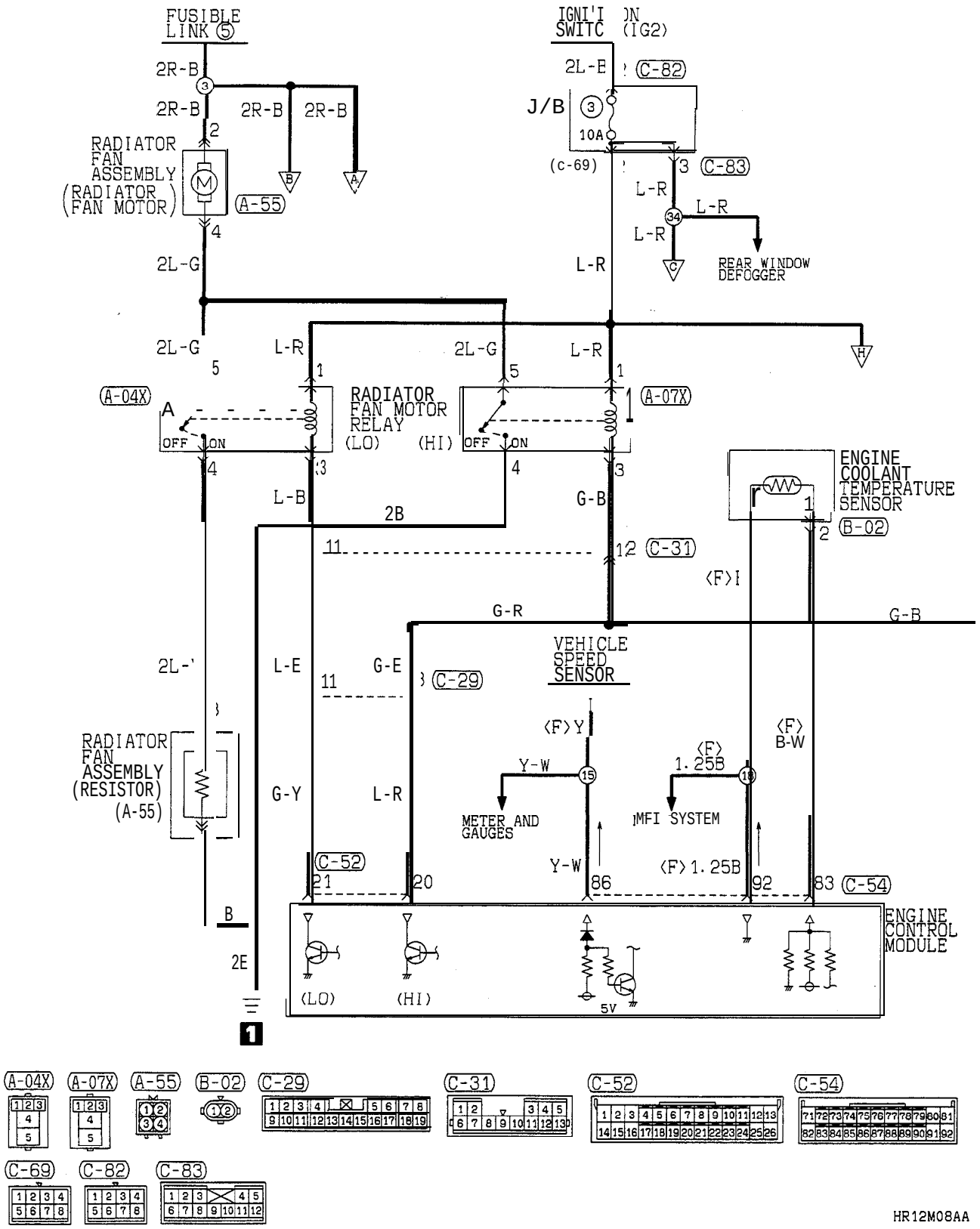

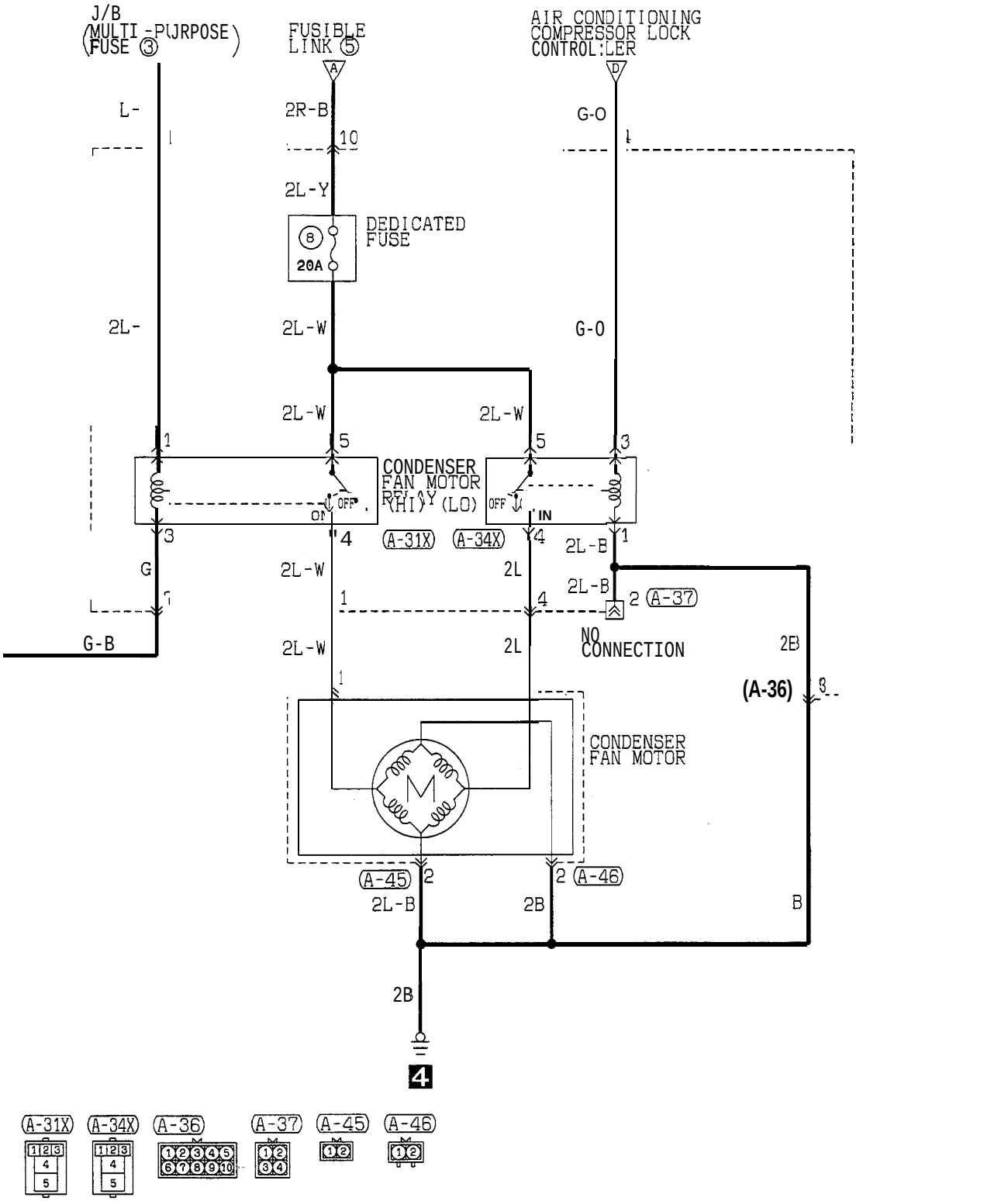

HR12M08AB

TSB Revision

FULL AUTO AIR CONDITIONING CIRCUIT (1994, 1995 MODELS) <TURBO, NON TURBO (CALIFORNIA)> (CONTINUED)

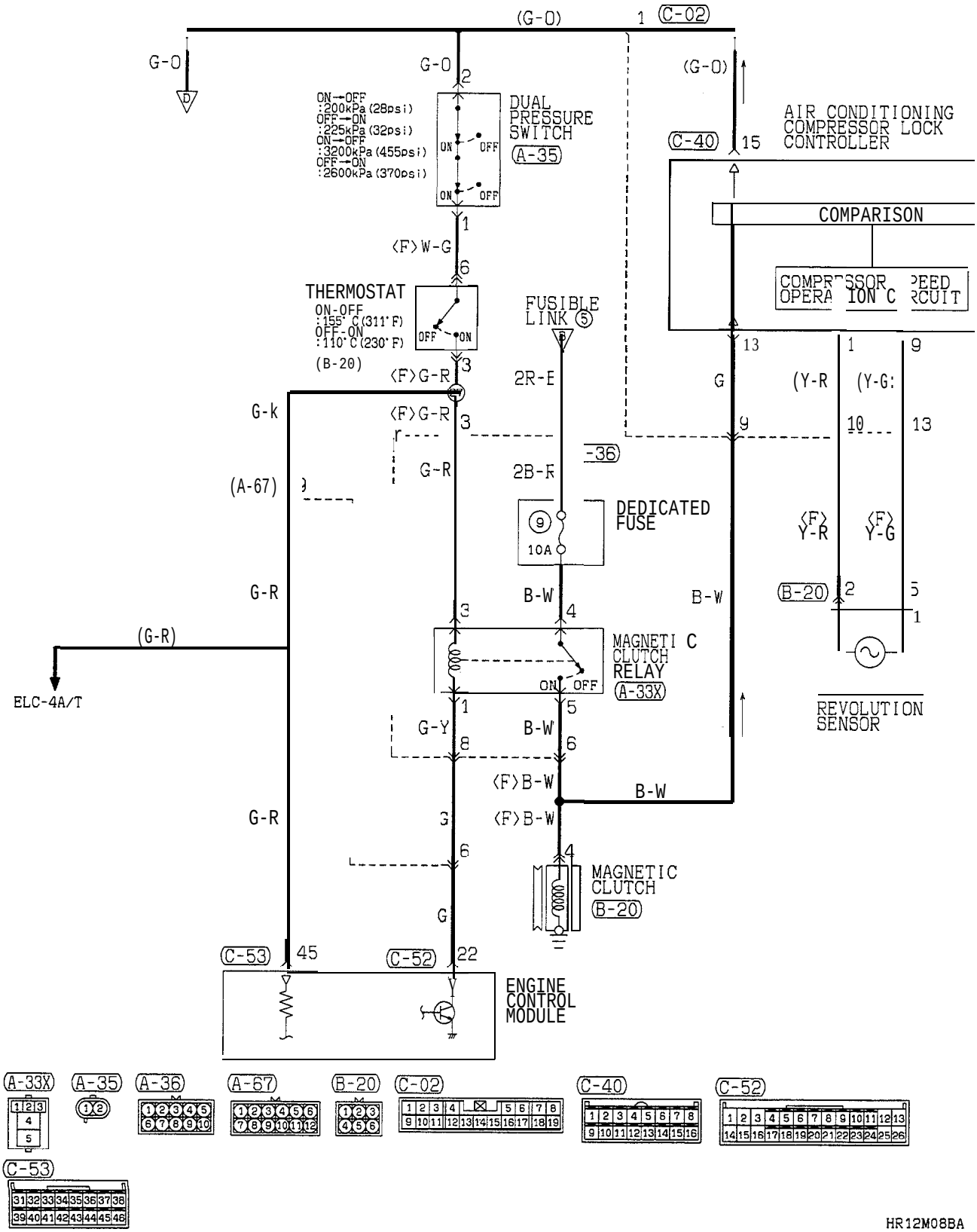

TSB Revision

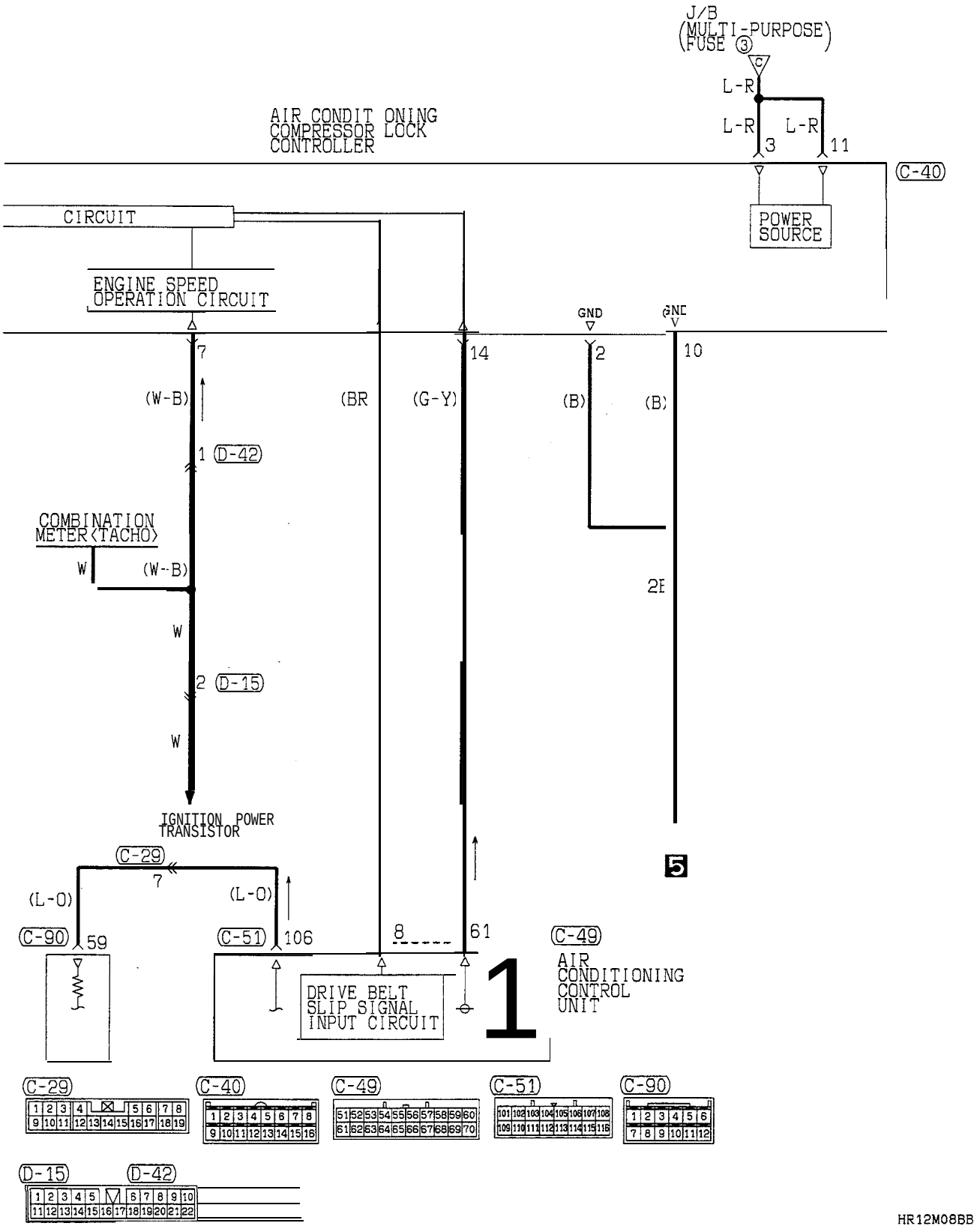

HR12M08BB

TSB Revision

FULL AUTO AIR CONDITIONING CIRCUIT (1994, 1995 MODELS) <TURBO, NON TURBO (CALIFORNIA)> (CONTINUED)

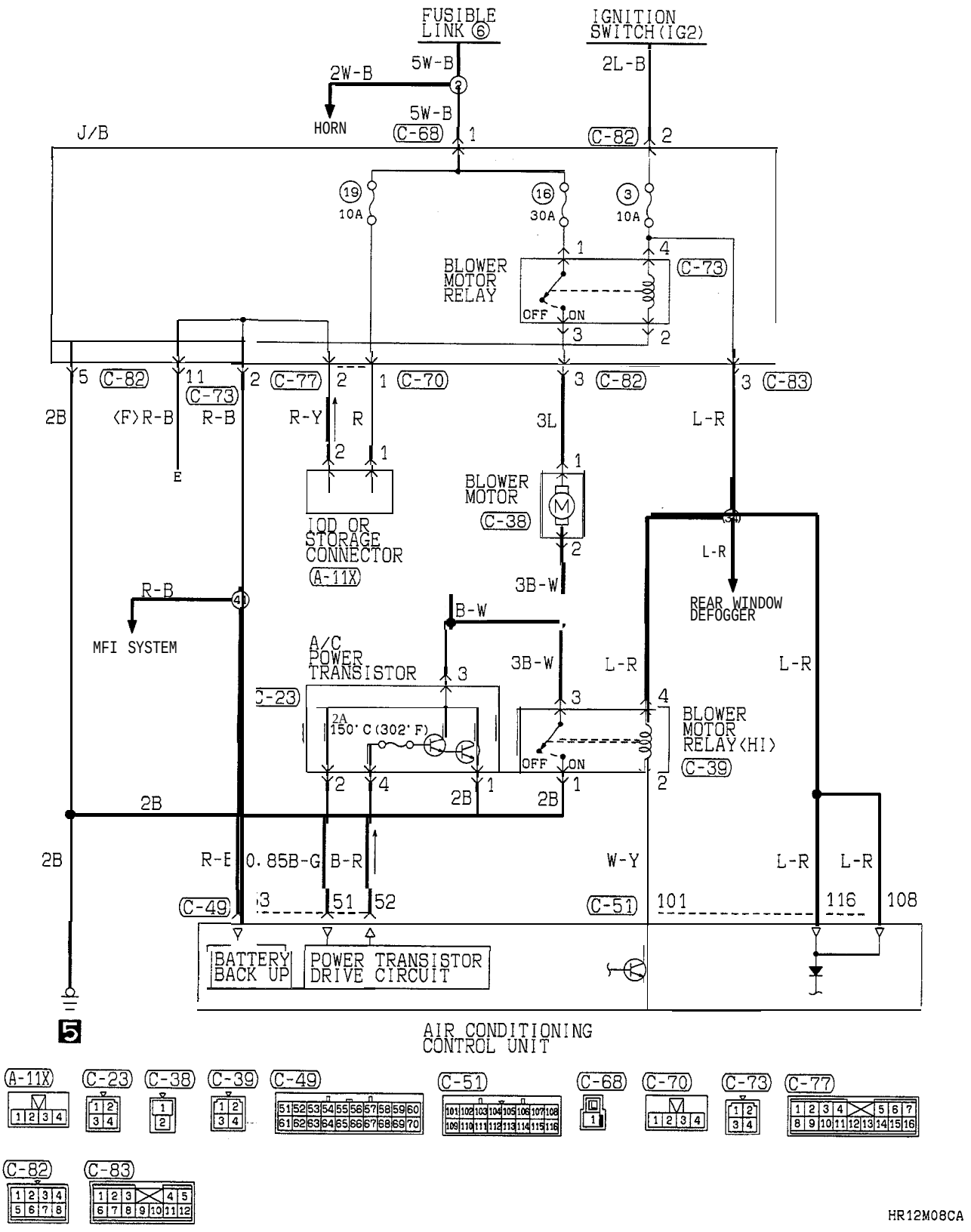

TSB Revision

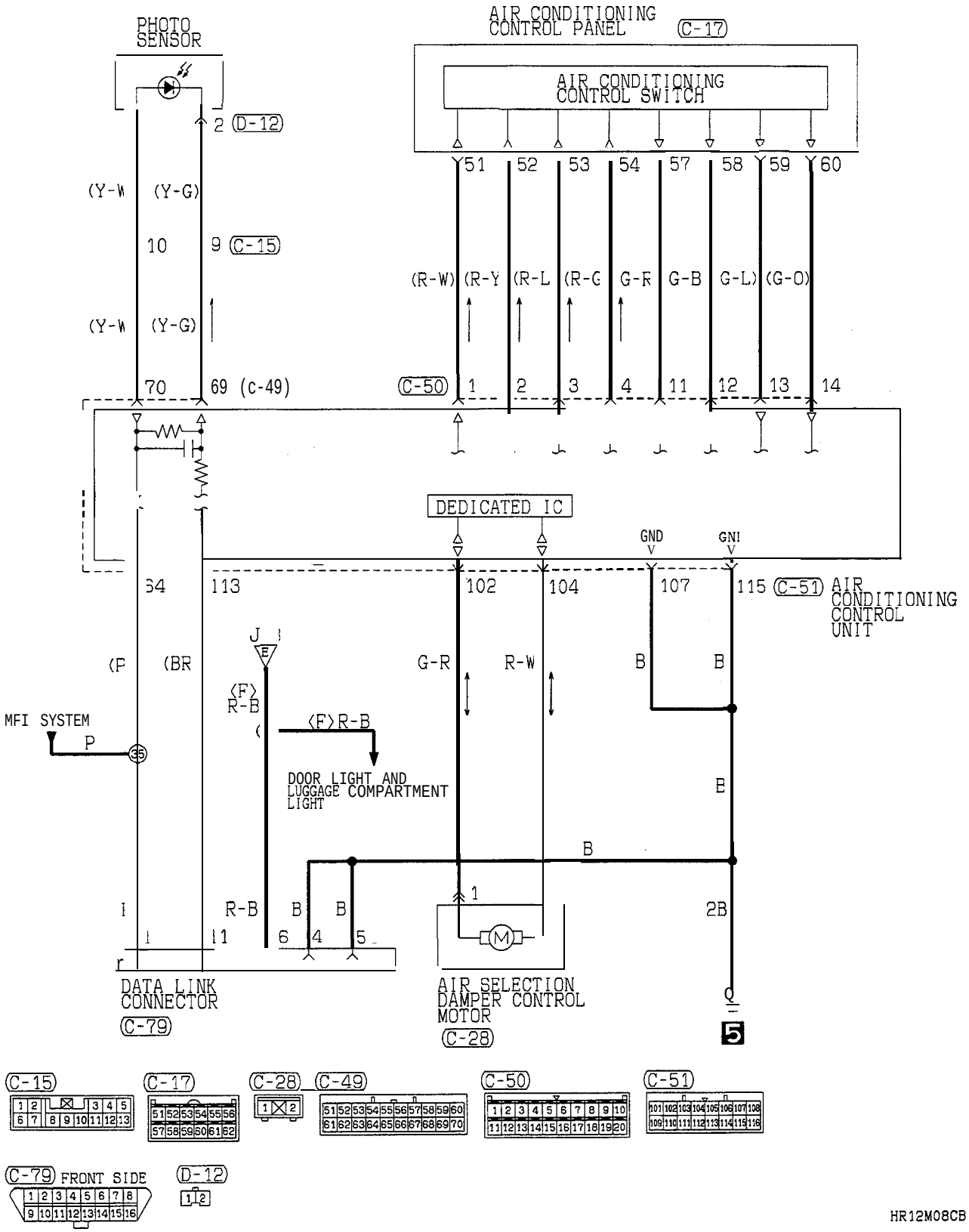
PHOTO SENSOR
AIR CONDITIONING CONTROL PANEL (C-17)
AIR CONDITIONING CONTROL SWITCH
2 (D-12)
(Y-W (Y-G)
10 9 (C-15)
(Y-W (Y-G)
70 69 (c-49)
51 52 53 54 57 58 59 60
(R-W) (R-Y (R-L (R-G G-R G-B G-L) (G-O)
(C-50) 1 2 3 4 11 12 13 14
DEDICATED IC
GND
GNI
54 113 102 104 107 115 (C-51) AIR CONDITIONING CONTROL UNIT
(P (BR
G-R R-W B B
(F) R-B
(F)R-B
MFI SYSTEM
P
35
DOOR LIGHT AND LUGGAGE COMPARTMENT LIGHT
B
B
R-B B B
6 4 5
1
2B
DATA LINK CONNECTOR (C-79)
AIR SELECTION DAMPER CONTROL MOTOR (C-28)
5
(C-15)
(C-17)
(C-28)
(C-49)
(C-50)
(C-51)
(C-79) FRONT SIDE
(D-12)
HR12M08CB

FULL AUTO AIR CONDITIONING CIRCUIT (1994, 1995 MODELS) <TURBO, NON TURBO (CALIFORNIA)> (CONTINUED)

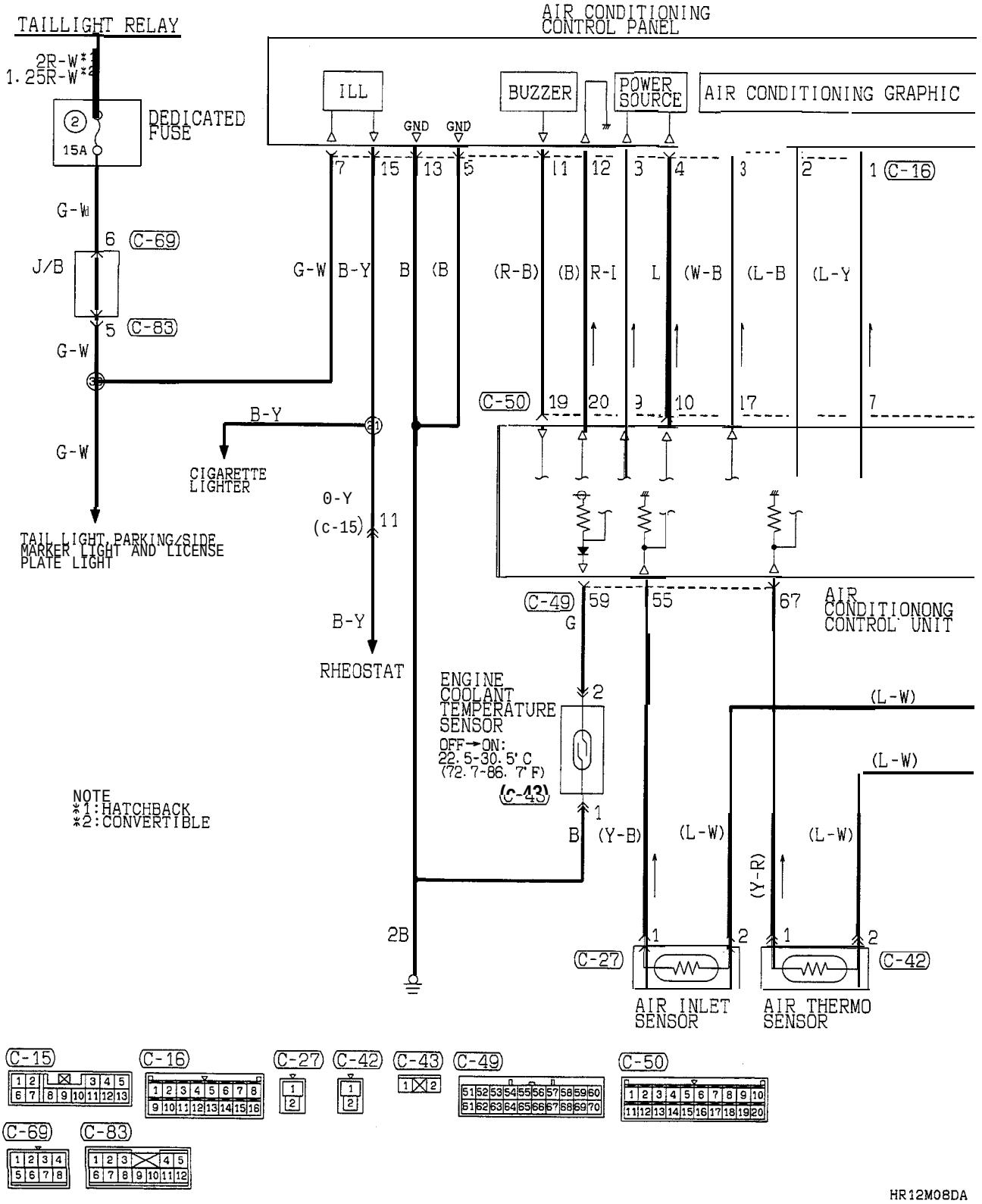

TSB Revision

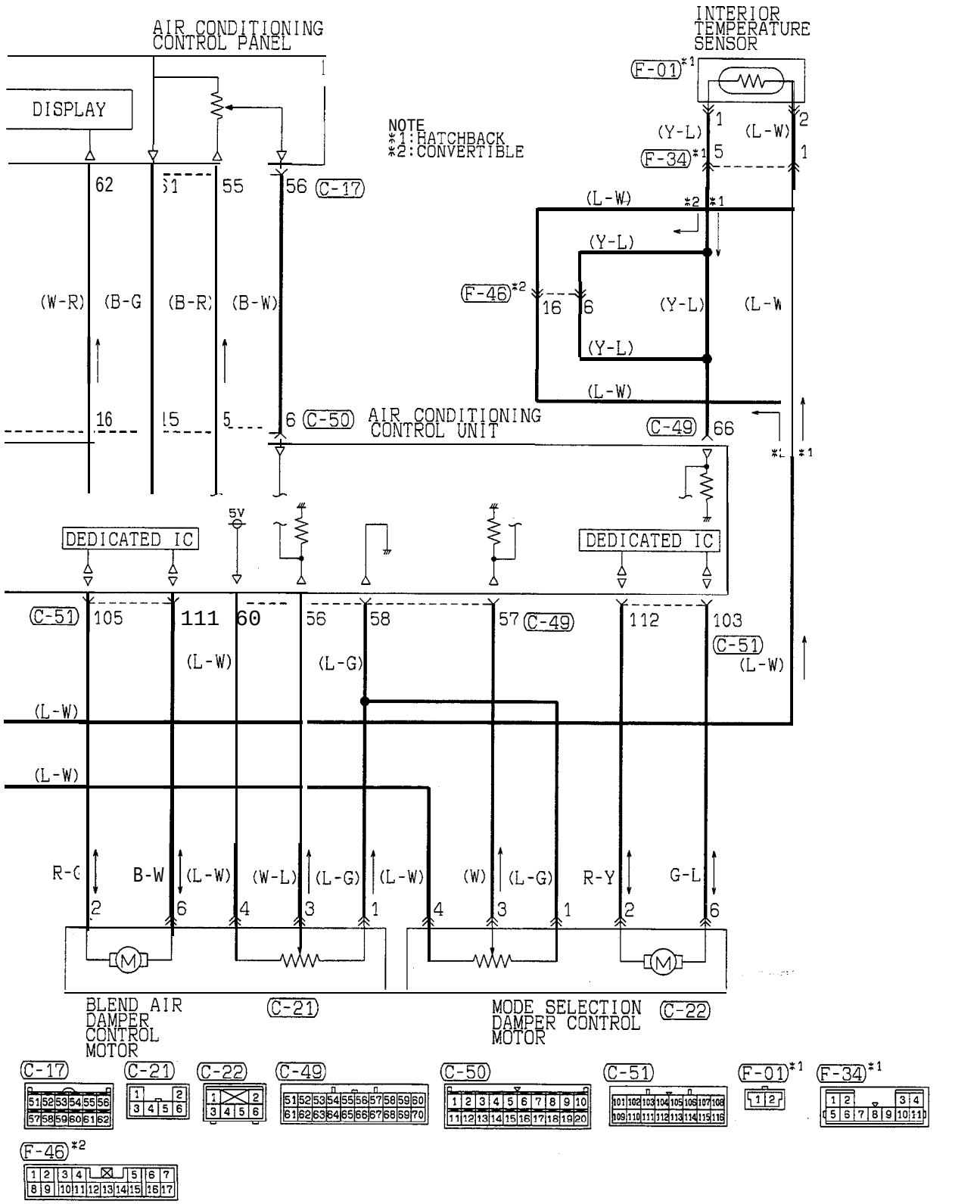

TSB Revision

FULL AUTO AIR CONDITIONING CIRCUIT (FROM 1996 MODELS)

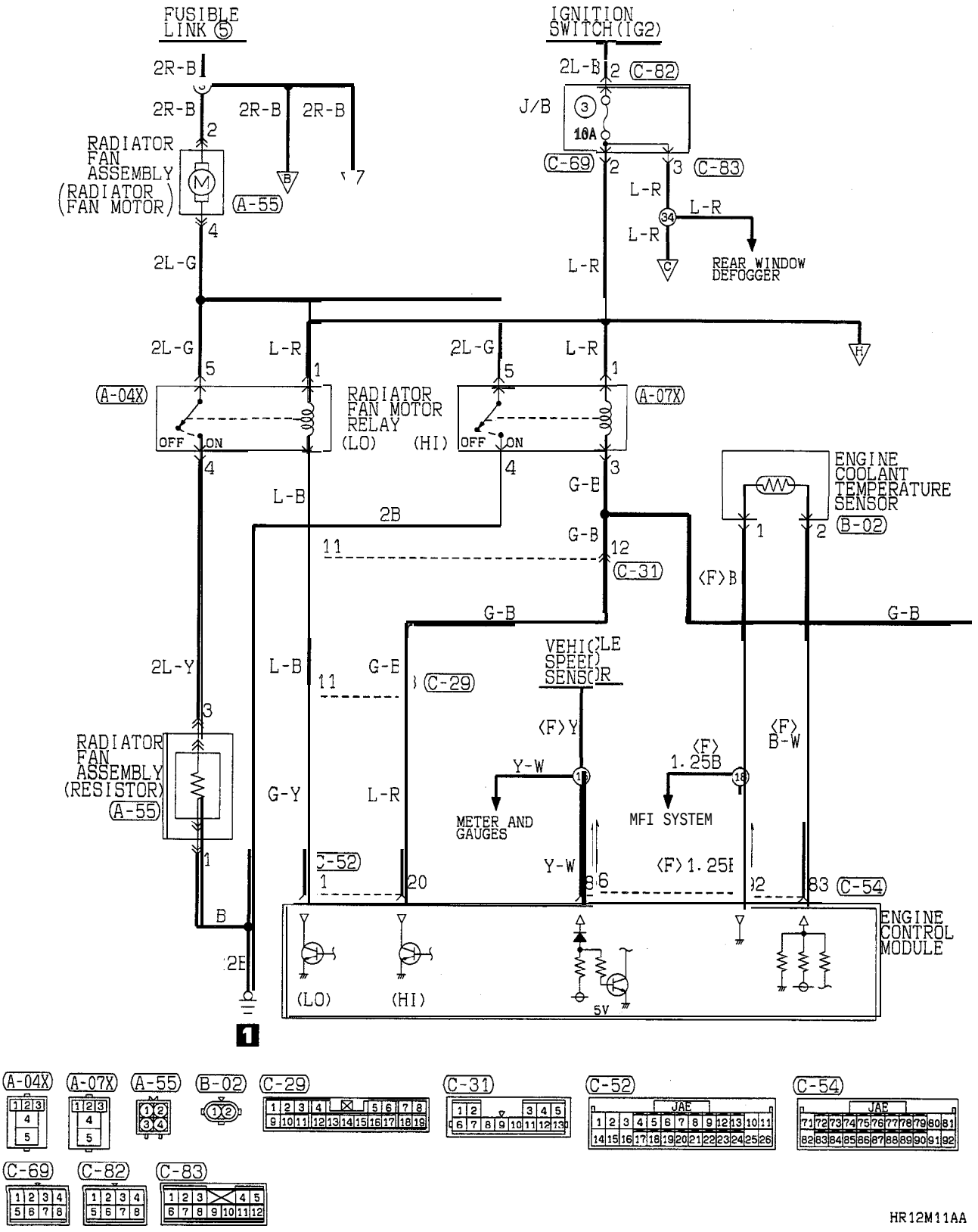

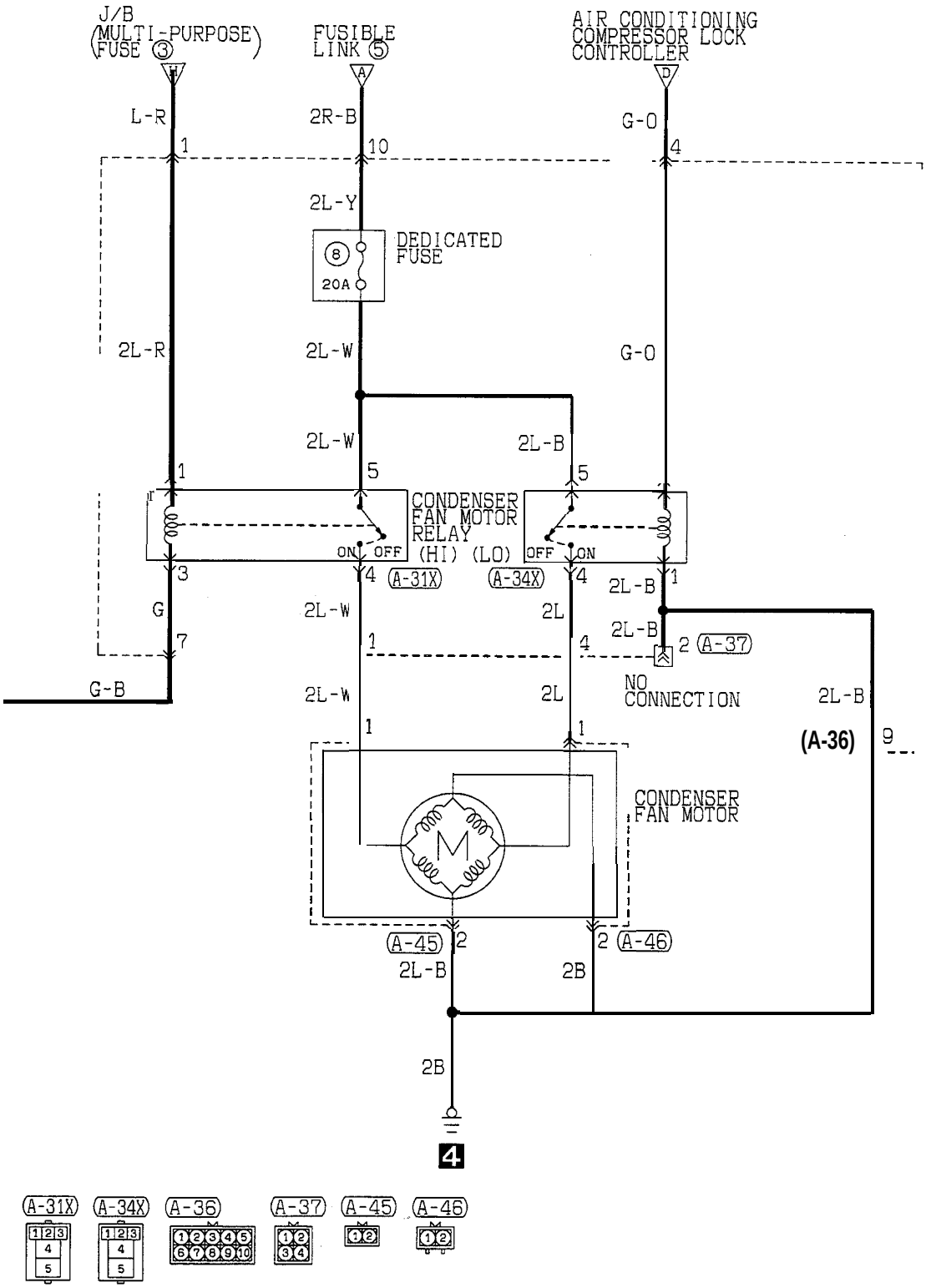

HR12M11AB

TSB Revision

FULL AUTO AIR CONDITIONING CIRCUIT (FROM 1996 MODELS) (CONTINUED)

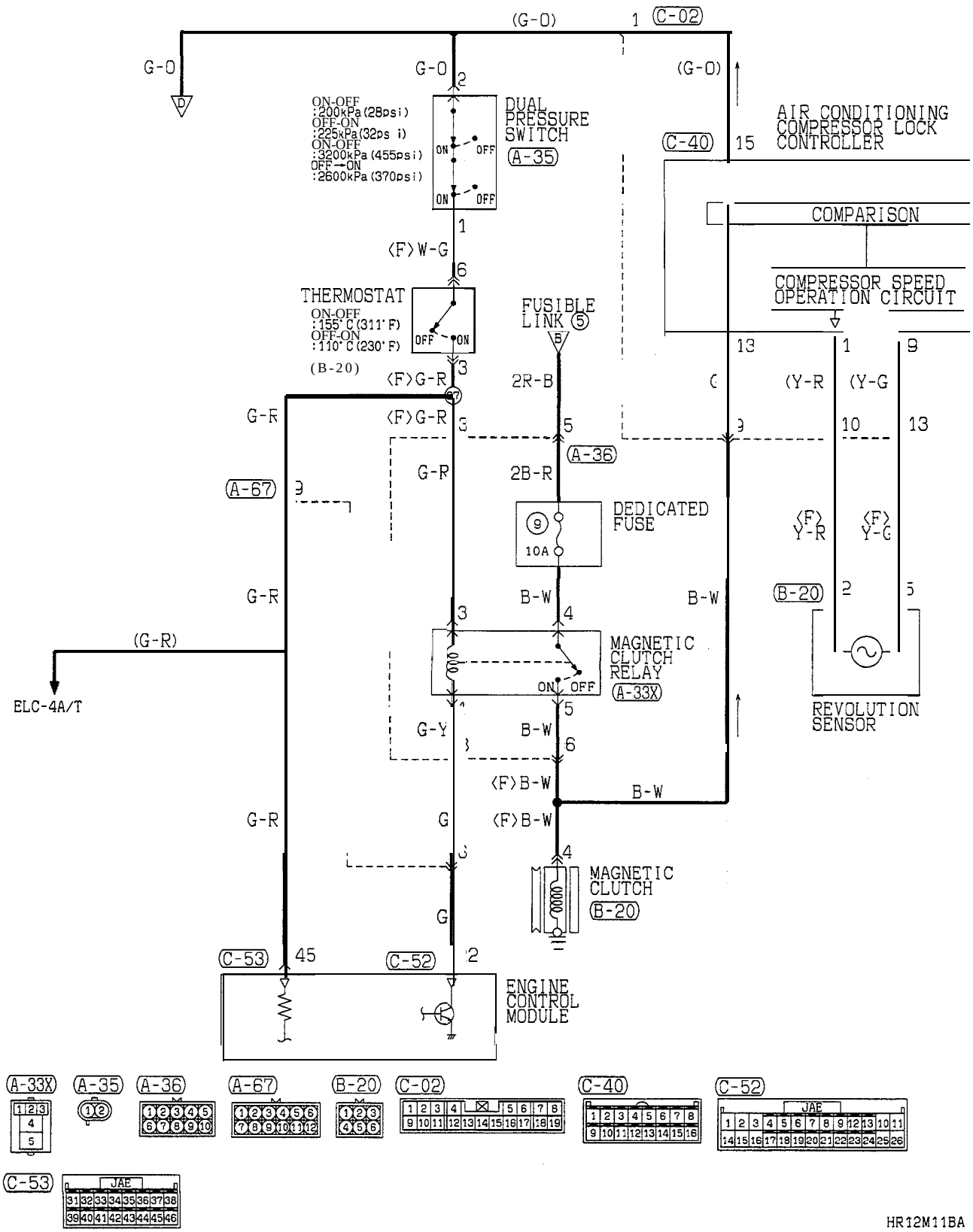

TSB Revision

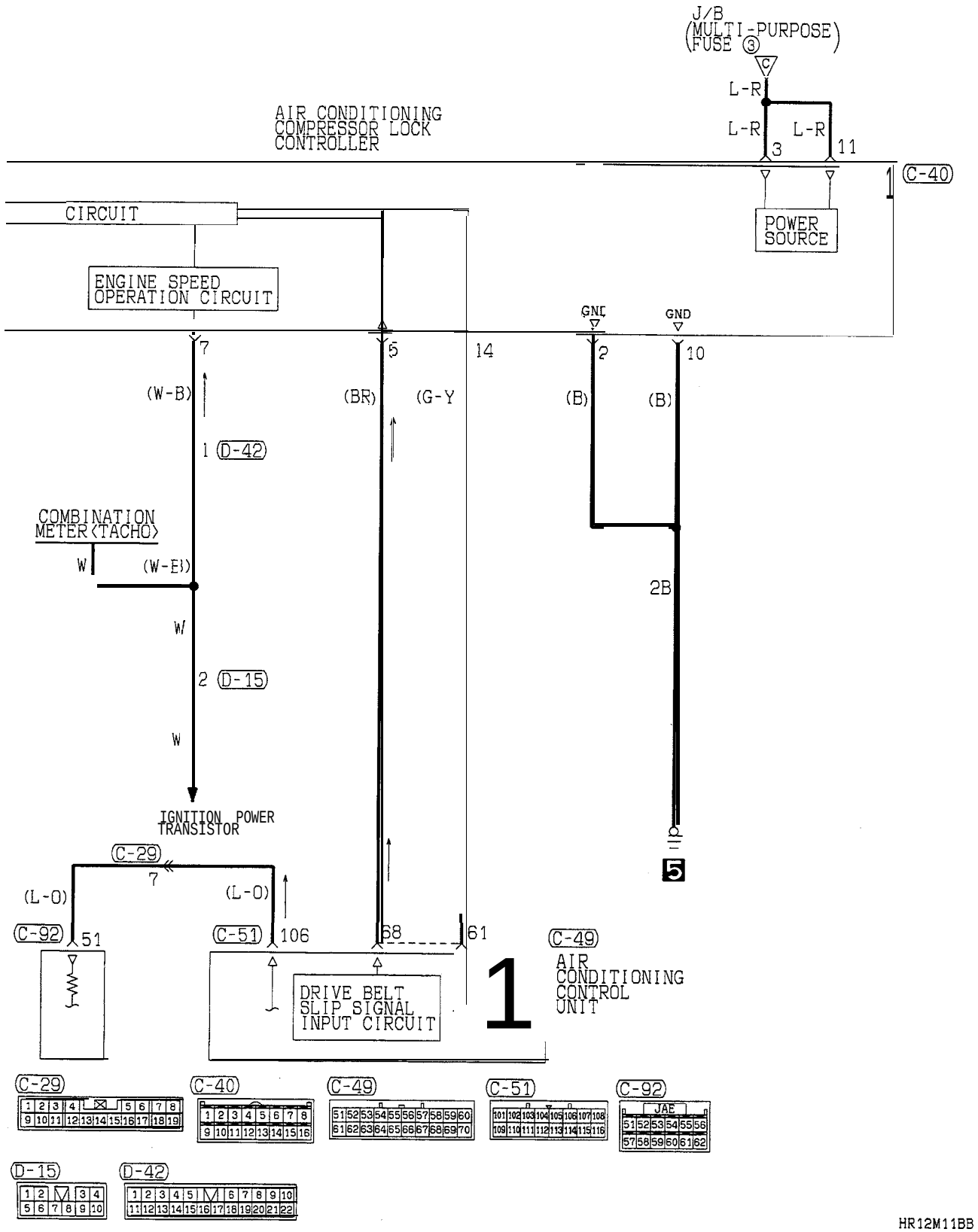

HR12M11BB

TSB Revision

FULL AUTO AIR CONDITIONING CIRCUIT (FROM 1996 MODELS) (CONTINUED)

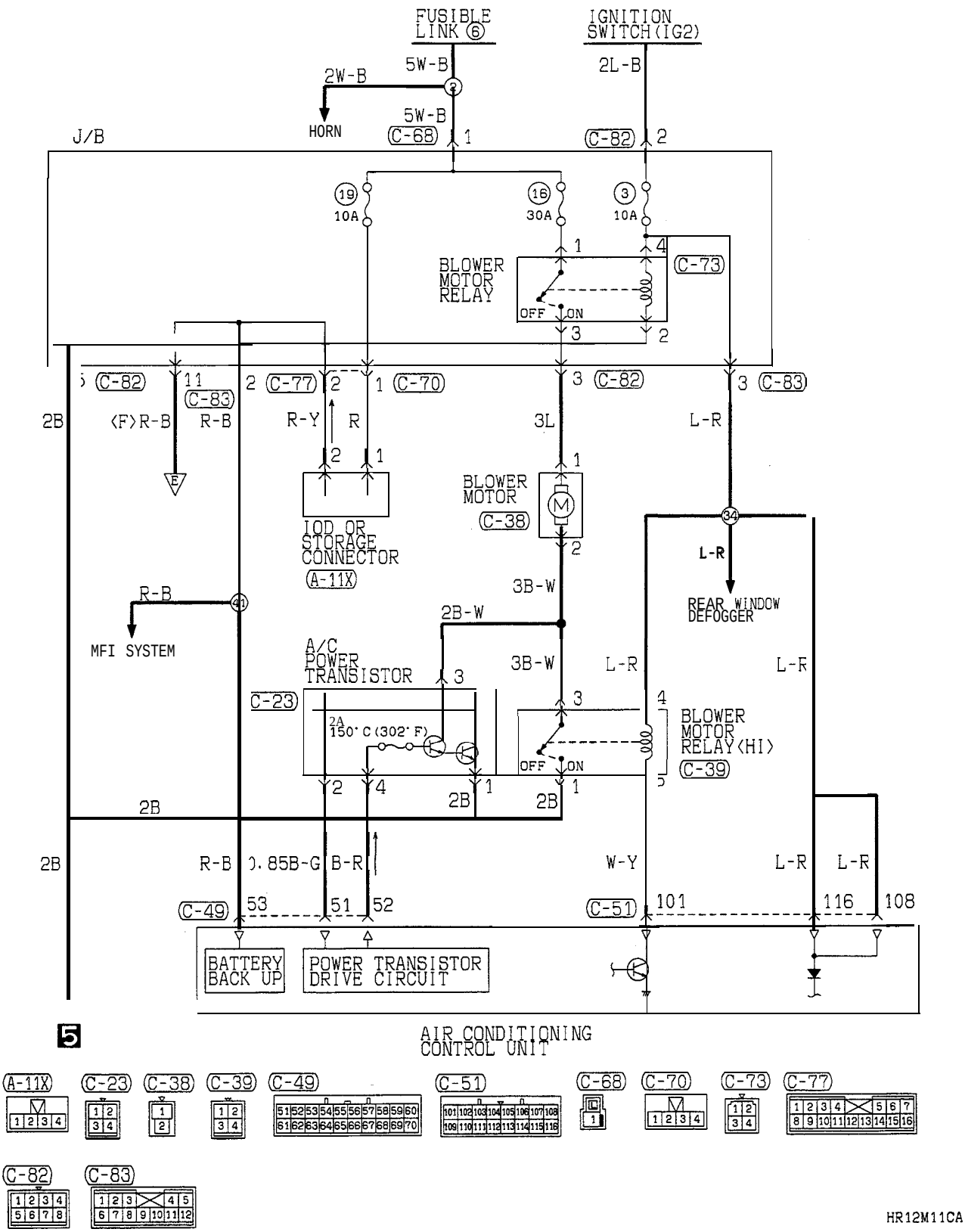

TSB Revision

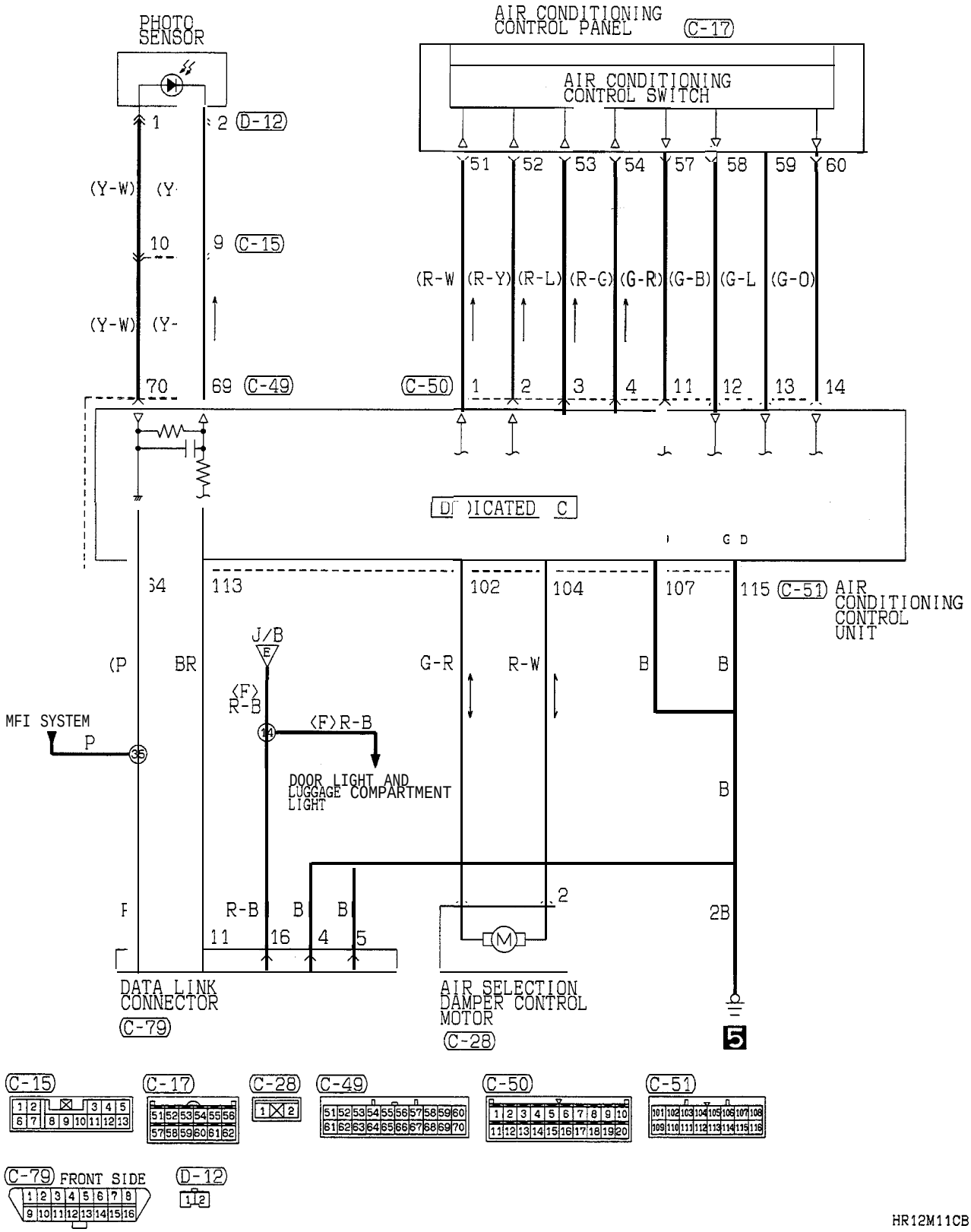

TSB Revision

FULL AUTO AIR CONDITIONING CIRCUIT (FROM 1996 MODELS) (CONTINUED)

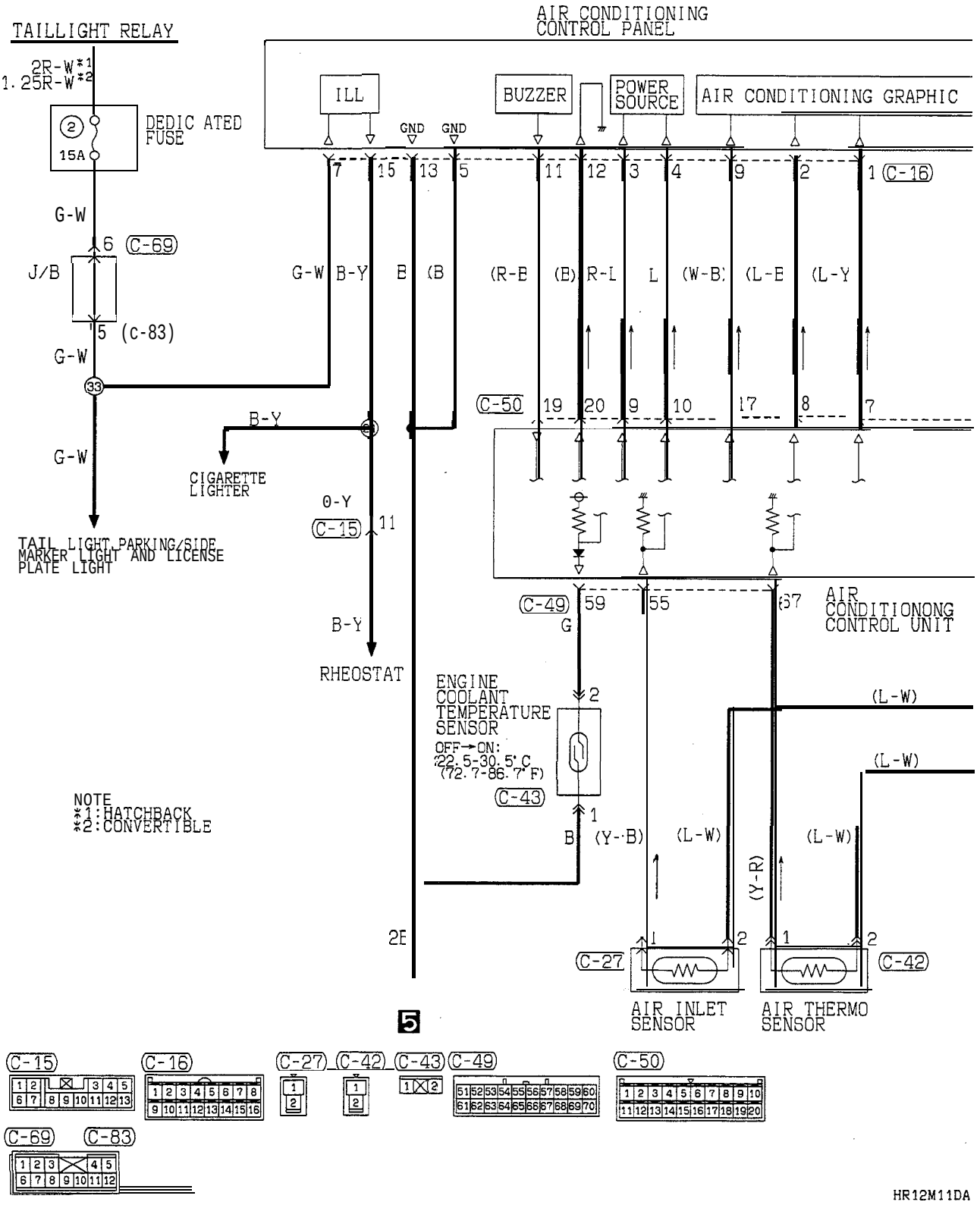

TSB Revision

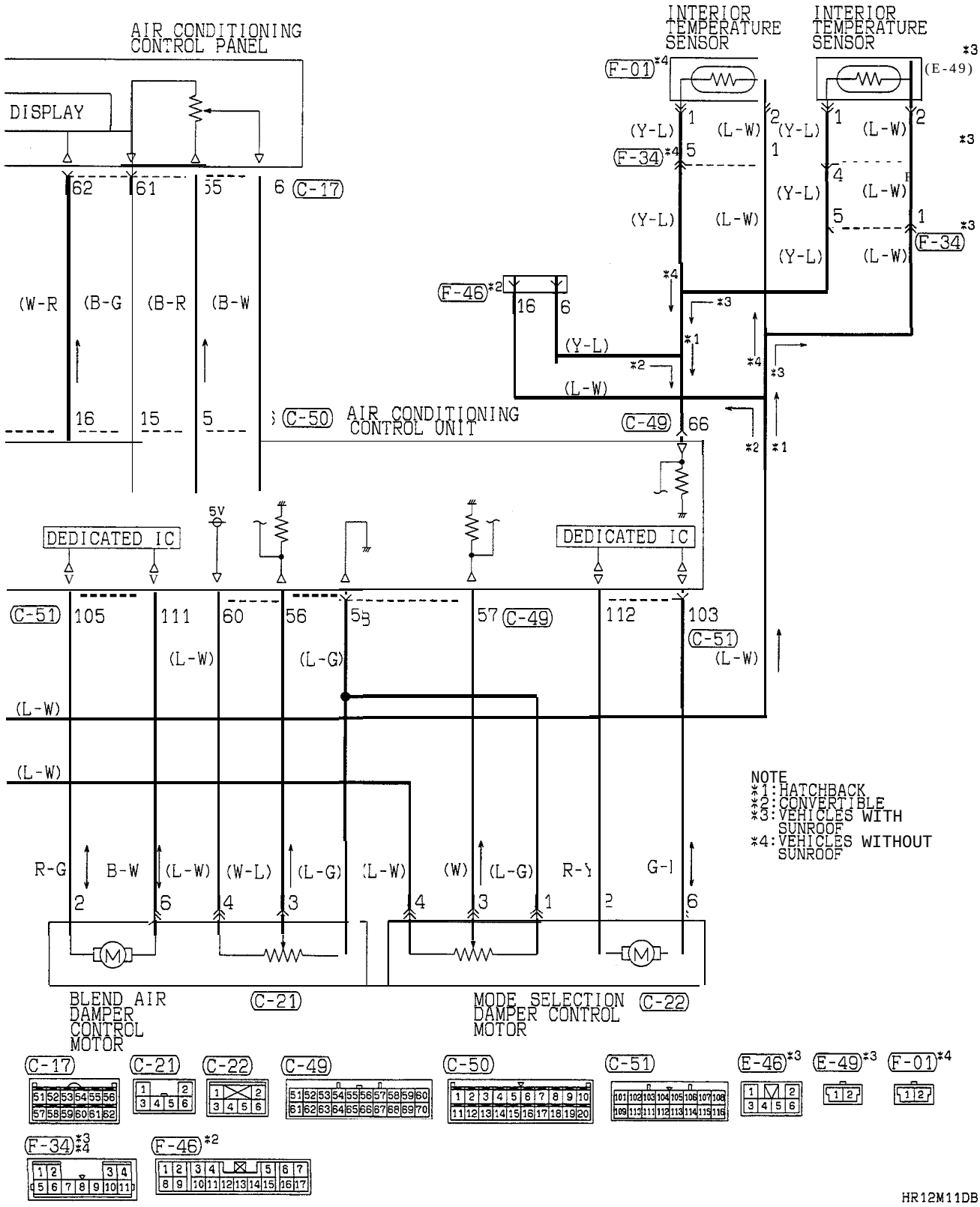

TSB Revision

COMPONENT LOCATION

Name	Symbol	Name	Symbol
Air conditioning compressor lock controller	I	Dual pressure switch	C
Air conditioning control unit	E	Engine control module	E
Air-inlet sensor	H	Engine coolant temperature sensor	J
Air-thermo sensor	F	Engine coolant temperature switch*	A
Blower motor relay	L	Interior temperature sensor	N
Blower motor relay (HI)	I	Magnetic clutch relay	B
Condenser fan motor relay (HI)	B	Photo sensor	G
Condenser fan motor relay (LO)	B	Radiator fan motor control relay*	B
Data link connector (From 1994 models)		Revolution sensor	D
Data link connector (Up to 1993 models)		Thermostat*	D

NOTE
- Up to 1993 models

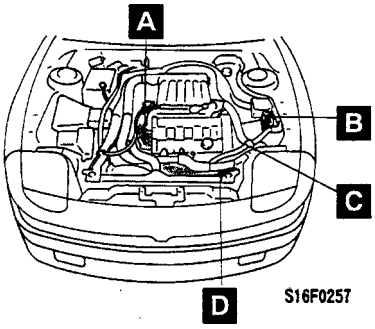

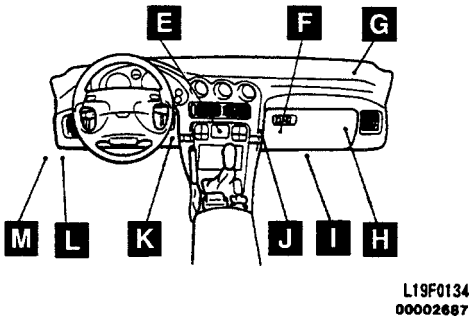

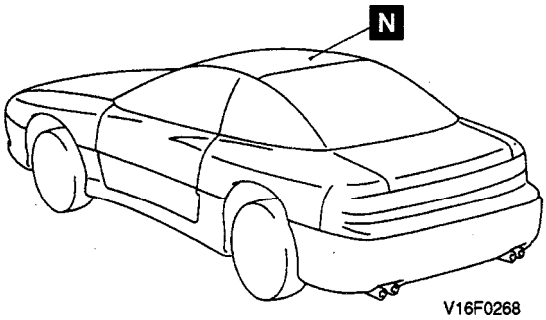

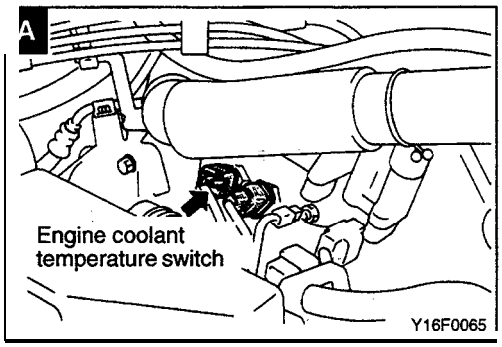

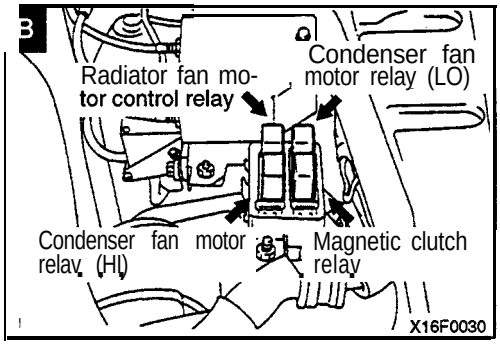

TSB Revision

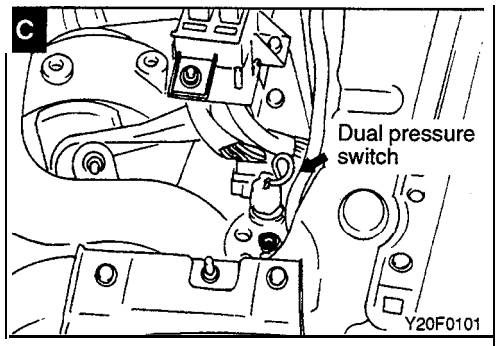
C
Dual pressure switch
Y20F0101

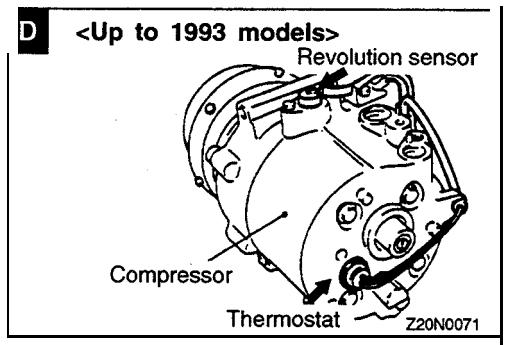
D
<Up to 1993 models>
Revolution sensor
Compressor
Thermostat
Z20N0071

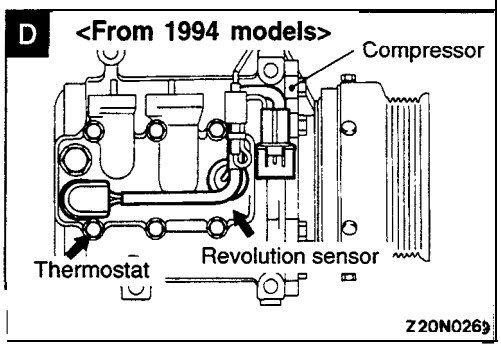
D
<From 1994 models>
Compressor
Thermostat
Revolution sensor
Z20N0269

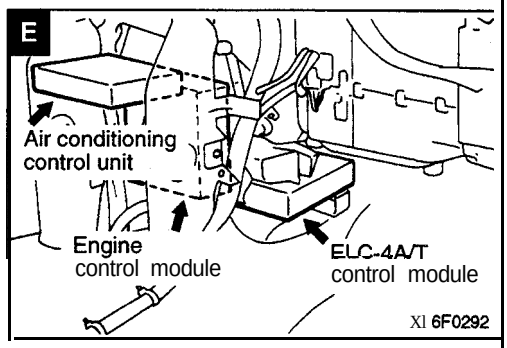
E
Air conditioning control unit
Engine control module
ELC-4A/T control module
XI 6F0292

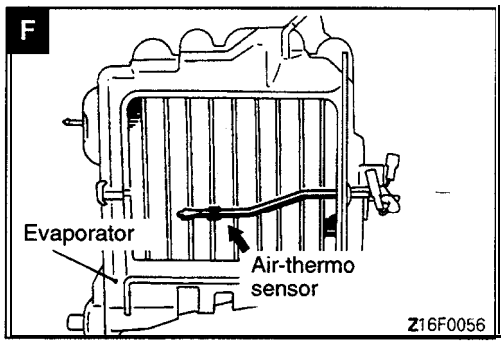
F
Evaporator
Air-thermo sensor
Z16F0056

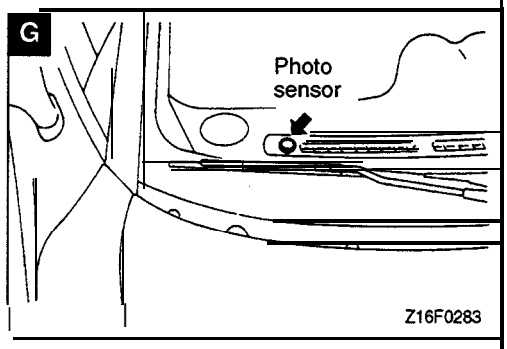
G
Photo sensor
Z16F0283

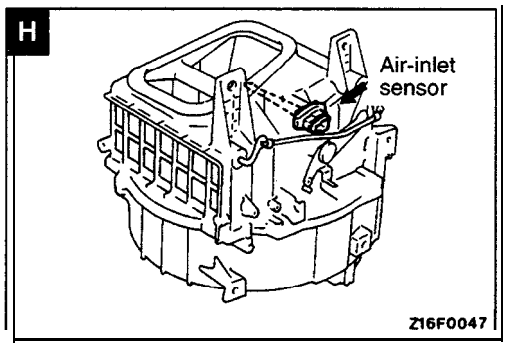
H
Air-inlet sensor
Z16F0047

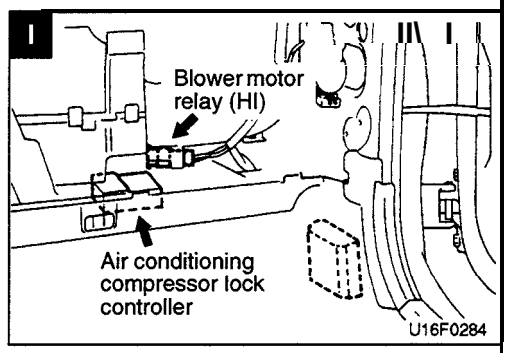
I
Blower motor relay (HI)
Air conditioning compressor lock controller
U16F0284

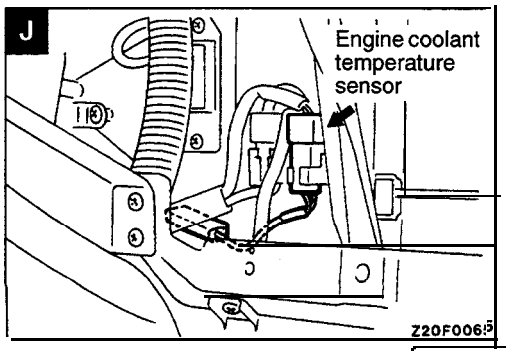
J
Engine coolant temperature sensor
Z20F0065

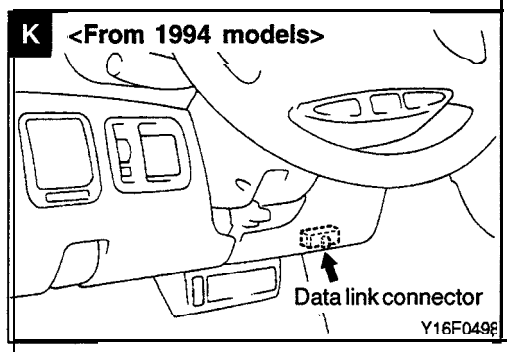
K
<From 1994 models>
Data link connector
Y16F0498

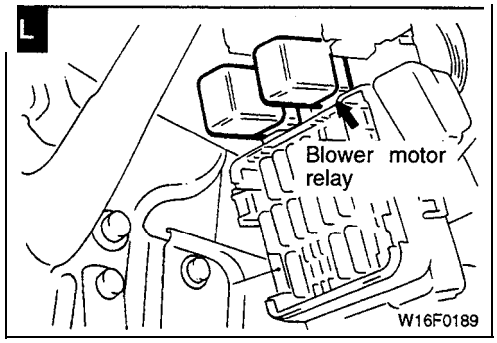

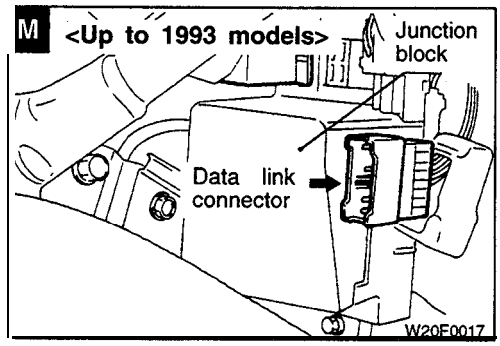

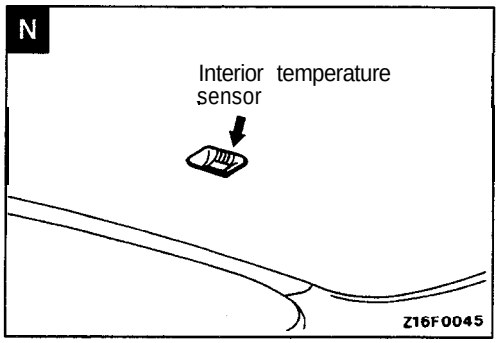

WINDSHIELD WIPER AND WASHER

COMPONENT LOCATION

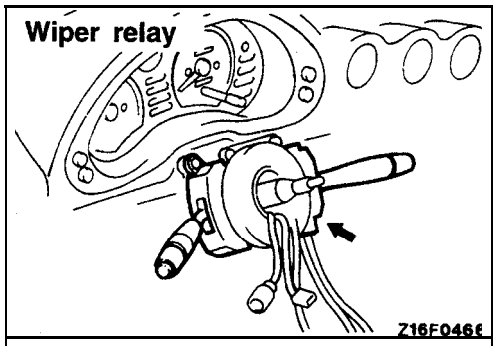

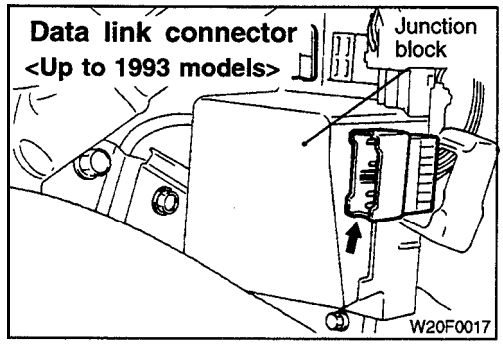

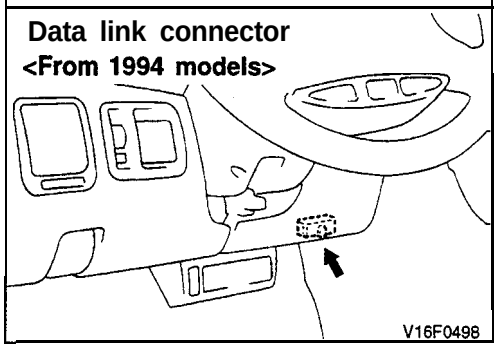

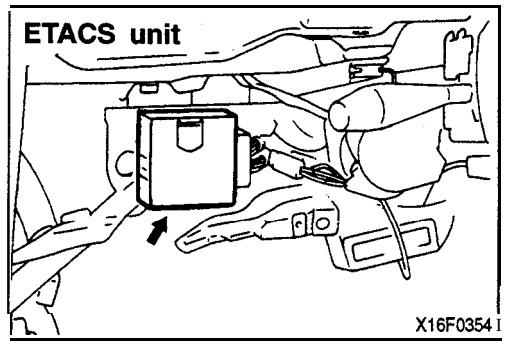

OPERATION

<Low-speed (and high-speed) wiper>

- When the wiper switch is placed in the LO position with the ignition switch in the ACC or ON position, wipers operate continuously at low speed.
- Placing the wiper switch in the HI position causes the wipers to operate at high speed.

<Intermittent wiper>

- If the wiper switch is turned to the INT position when the ignition switch is in the ON or ACC position, the voltage value from the intermittent variable volume switch is input to intermittent time detection circuit.
- The intermittent time detection circuit outputs an H signal at the intermittent time according to the set value of the intermittent variable volume switch and, via OR, turns the Tr on and off to operate the wiper.

<Auto wiper stop>

- When the wipe: switch is placed in the OFF position, the cam contacts of wiper motor causes current to flow through the auto wiper stop circuit, allowing the wiper blades to cycle before they reach to the stop position.

<Mist wiper>

- If the washer switch is on for 0.6 second or less when the ignition switch is at ON or ACC with the wiper switch turned off, the washer liquid will not be poured but transistor will be turned on to operate the wipers one time.

<Wiper linked with washer>

- If the washer switch is on for 0.6 second or more when the ignition switch is at ON or ACC with the wiper switch turned off, the washer liquid will be poured and the transistor will be turned on 0.6 second later to operate the wipers two or three times.

TROUBLESHOOTING HINTS

Phenomenon		Inspecting method
Wipers do not operate continuously	Washer does not operate.	• Check the multi-purpose fuse No. 9
	Washer operates.	• Check the wiper motor. (Refer to GROUP 51–Windshield Wiper and Washer.) • Check the column switch. (Refer to GROUP 51–Windshield Wiper and Washer.)
Low-speed (or high-speed) wiper operation only is inoperative.		• Check the column switch. (Refer to GROUP 51–Windshield Wiper and Washer.)
Wipers do not operate intermittently. (They operate continuously.)		• Check the wiper switch "INT" input signal. (Refer to GROUP 51–Troubleshooting.) • Check the column switch. (Refer to GROUP 51–Windshield Wiper and Washer.)
Wipers do not stop.		• Check the wiper switch "INT" input signal. (Refer to GROUP 51–Troubleshooting.) • Check the column switch. (Refer to GROUP 51–Windshield Wiper and Washer.) • Check the wiper motor. (Refer to GROUP 51–Windshield Wiper and Washer.)
The intermittent time will not vary even if the variable intermittent wiper control switch is operated.		• Check the variable intermittent wiper control switch input signal. (Refer to GROUP S-Troubleshooting.) • Check the column switch. (Refer to GROUP 51–Windshield Wiper and Washer.)
Even if the washer switch is on for 0.6 second or more,. the washer will not operate.	The wipers linked with the washer operate.	• Check the washer motor. (Refer to GROUP 51–Windshield Wiper and Washer.) • Check the washer nozzle and washer tube.
	The wipers linked with the washer do not operate.	• Check the washer switch input signal. • Check the washer switch. (Refer to GROUP 51–Windshield Wiper and Washer.)

WINDSHIELD WIPER AND WASHER CIRCUIT

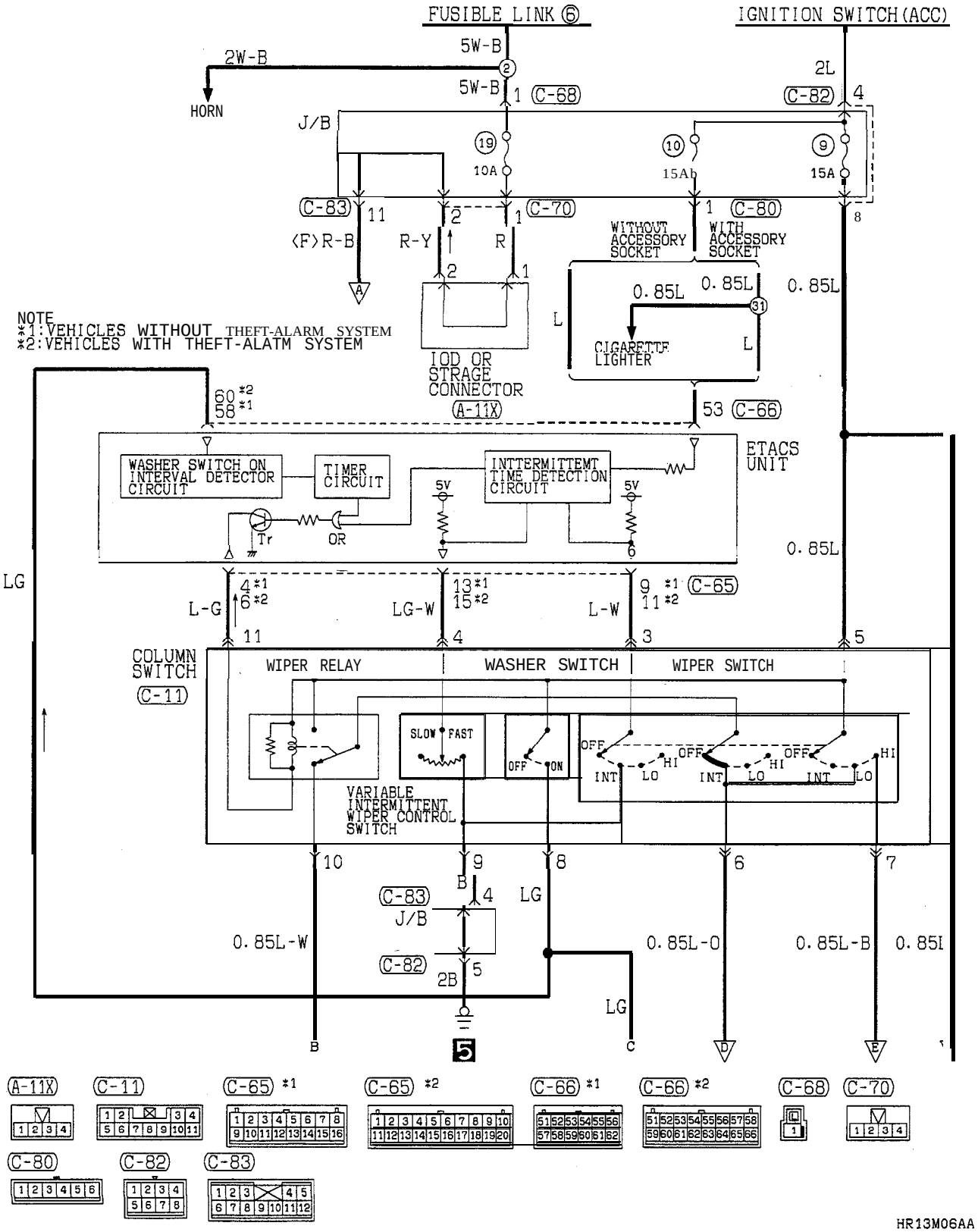

HR13M06AA

TSB Revision

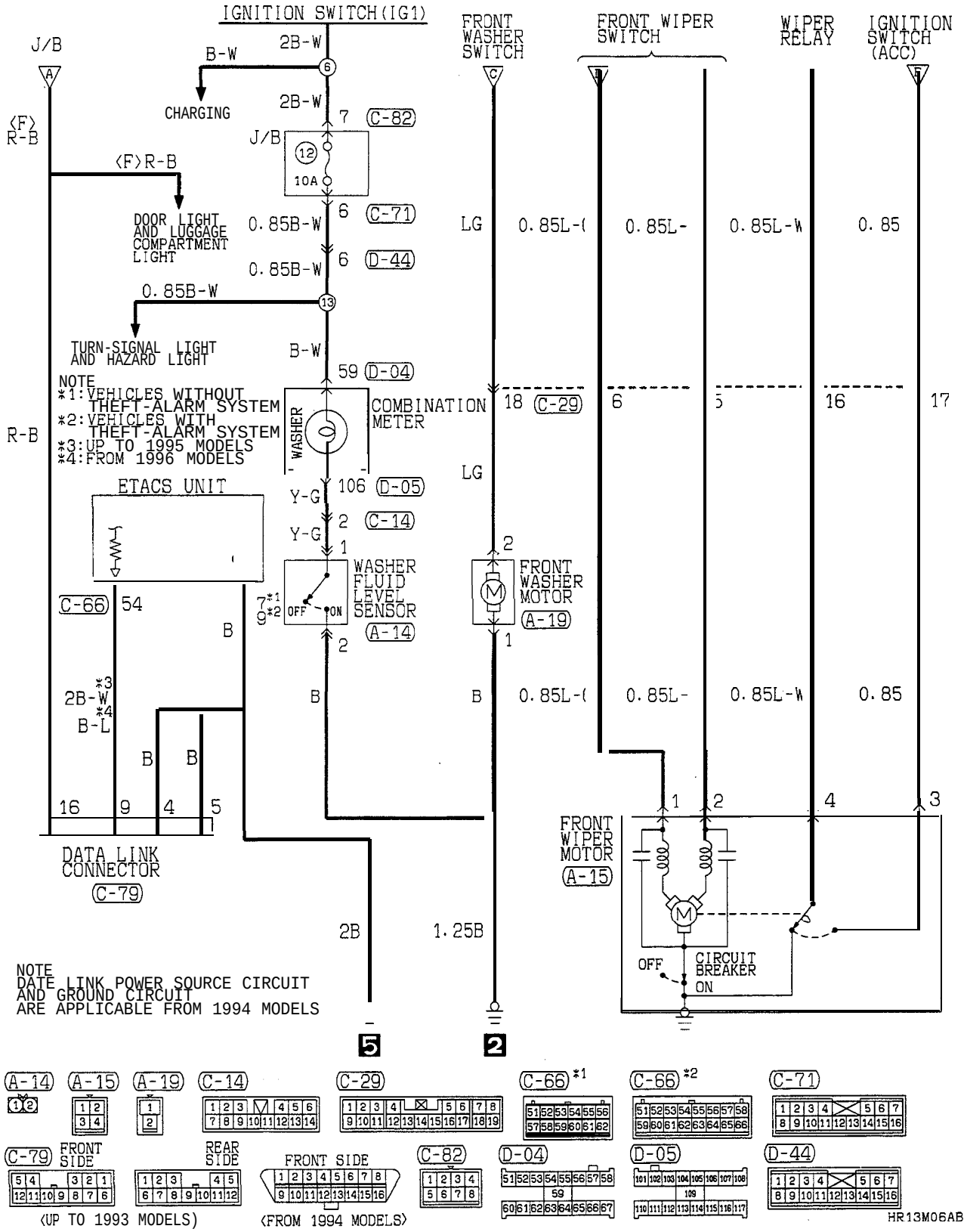

TSB Revision

REAR WIPER AND WASHER CIRCUIT

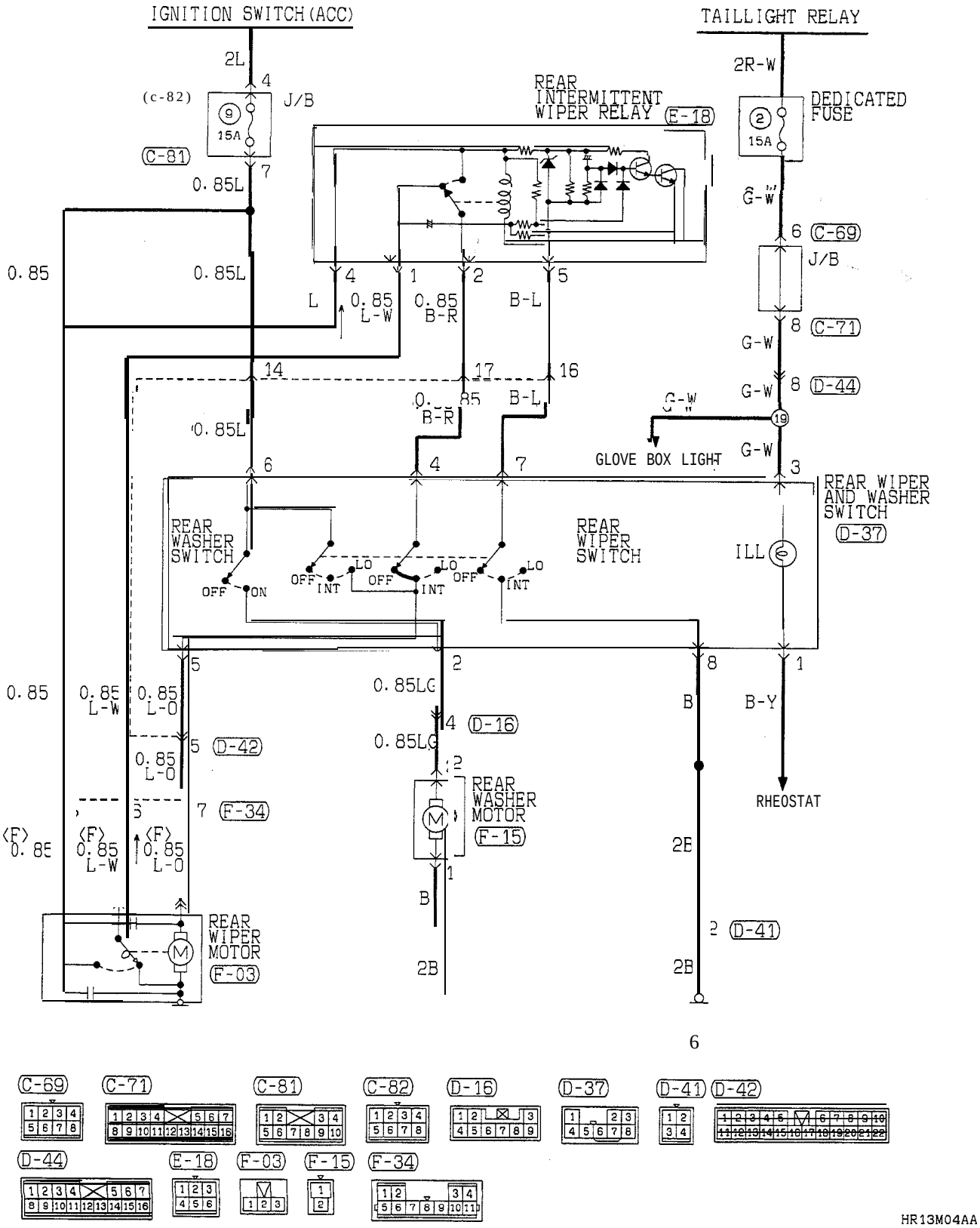

6

HR13M04AA

TSB Revision

COMPONENT LOCATION

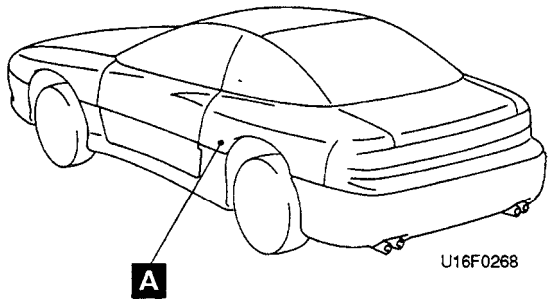

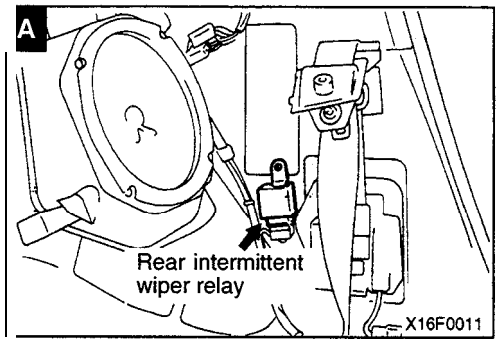

OPERATION

<Low-speed wiper>

- When the rear wiper switch is placed in the ON position with the ignition switch in the ACC or ON position, wipers operate continuously at low speed.

<Auto wiper stop>

- When the rear wiper switch is placed in the OFF position, the cam contains of wiper motor causes current to flow through the auto wiper stop circuit, allowing the wiper blades to cycle before they reach to the stop positions.

<Intermittent wiper>

- When the rear wiper switch is placed in the INT position with the ignition switch in ACC or ON position, the rear intermittent wiper relay is energized causing the rear intermittent wiper relay contacts to close and open repeatedly.
- When the contacts are closed, the wiper motor is energized.
- When the rear wiper motor is energized, the rear intermittent wiper relay contacts open; however, the cam contacts keep the rear wiper motor energized until the wiper blades return to their stop position.

TROUBLESHOOTING HINTS

1. Wipers do not operate.
   (1) Washer is not operative, either.
   - Check multi-purpose fuse No. 9.
   - Check ground.
2. Low-speed wiper operation only is inoperative.
   - Check wiper switch.
3. Wipers do not stop.
   - Check wiper motor.
   - Check rear intermittent wiper relay.
   - Check rear wiper switch.
4. Intermittent wiper operation is inoperative.
   - Check terminal voltage of the rear intermittent wiper relay energized. (Refer to GROUP 51–Windshield Wiper and Washer for information concerning the installation position of the intermittent wiper relay.)

Terminal No.	Voltage	Check
2	0V	Rear intermittent wiper relay or rear wiper switch
	12V	Rear intermittent wiper relay
	0 ↔ 12V (alternating)	–(Normal)

5. Washer is inoperative.
   - Check washer motor.
   - Check washer switch.

REMOTE CONTROLLED MIRROR CIRCUIT

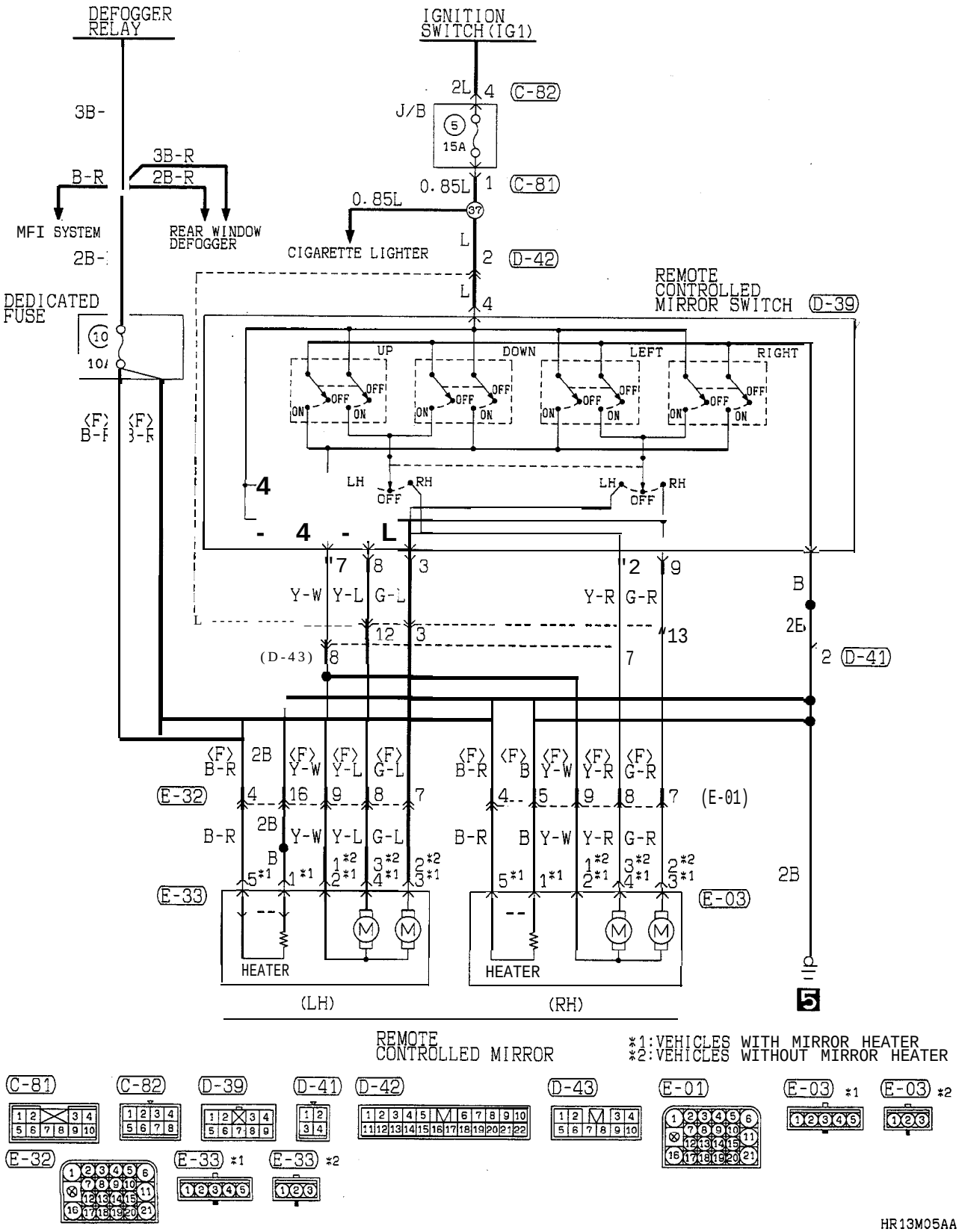

TSB Revision

OPERATION

- When teh remote controlled mirror switch is operated while the ignition key is in "ACC" or "ON" position, current flows through fuse No. 5 remote controlled mirror switch, remote controlled mirror, remote controlled mirror switch, and ground, causing the mirror to move.

TROUBLESHOOTING HINTS

Neither right nor left mirror operates

1) Also cigarette lighter does not operate
   - Check multi-prpose fuse No. 5.
2) Cigarette lighter operates
   - Check remote controlled mirror switch.

ANTI-LOCK BRAKING SYSTEM (ABS) CIRCUIT (UP TO OCTOBER, 1993)

<FWD>

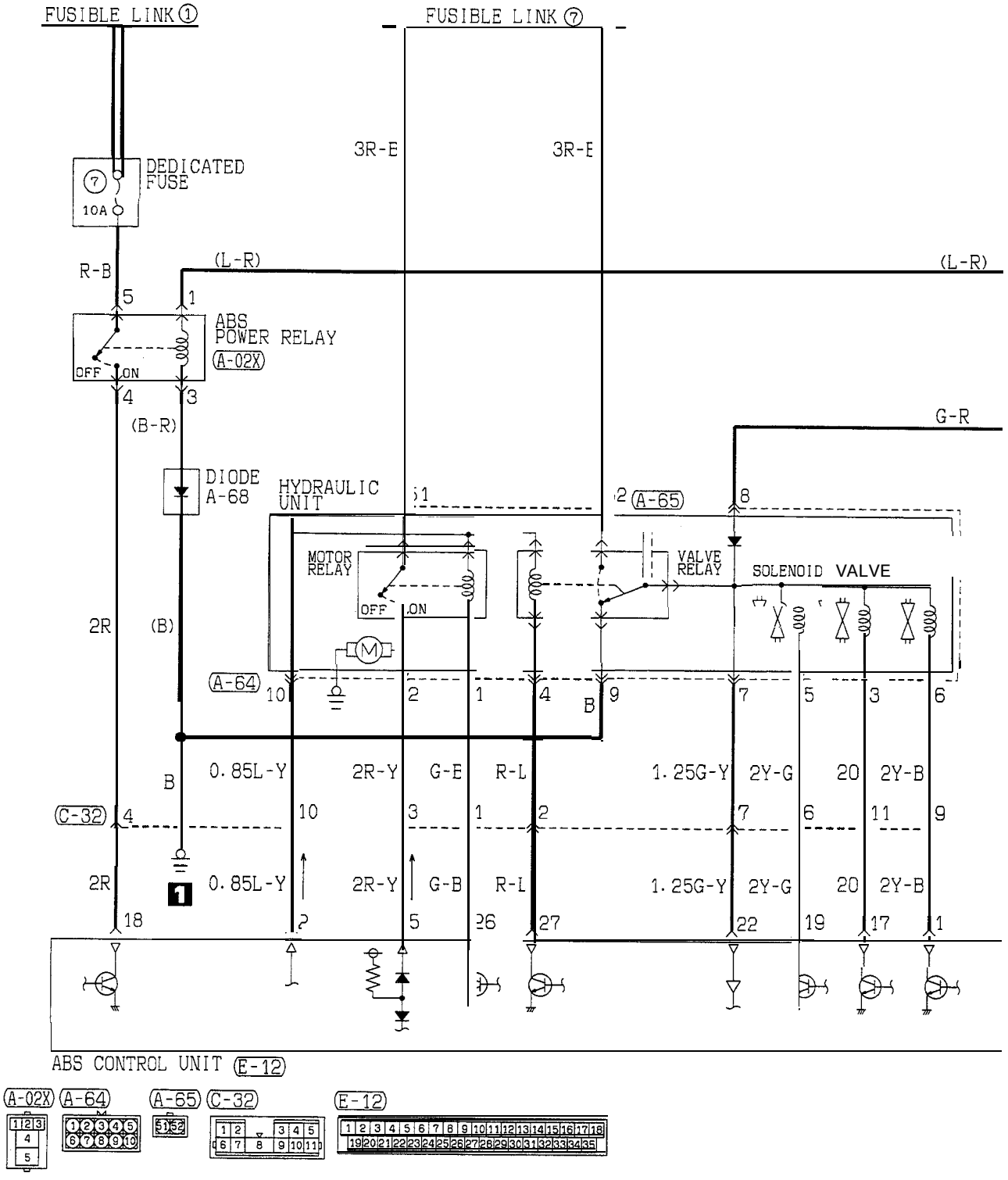

HR15M05AA

TSB Revision

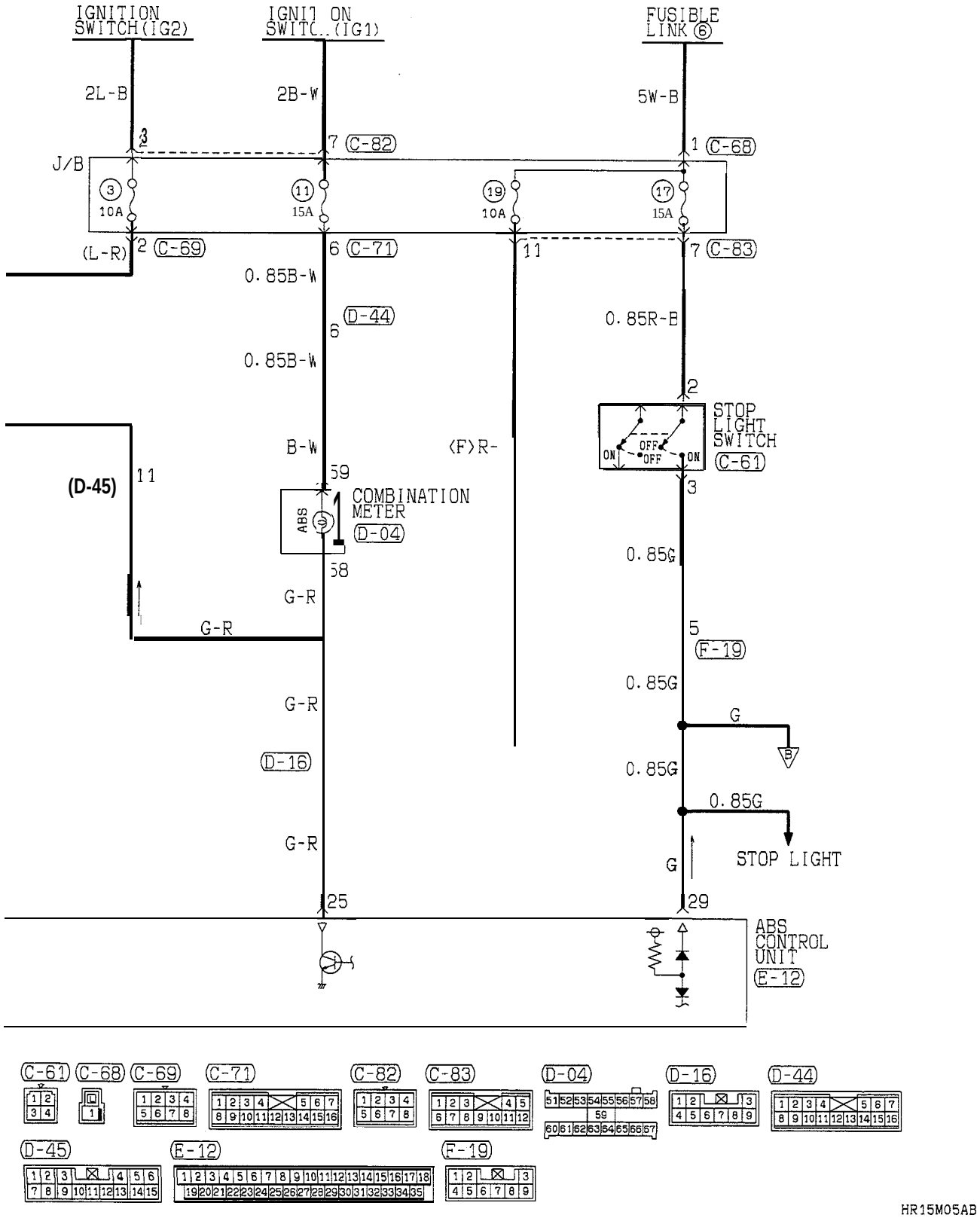

HR15M05AB

TSB Revision

ANTI-LOCK BRAKING SYSTEM (ABS) CIRCUIT (UP TO OCTOBER, 1993) <FWD> (CONTINUED)

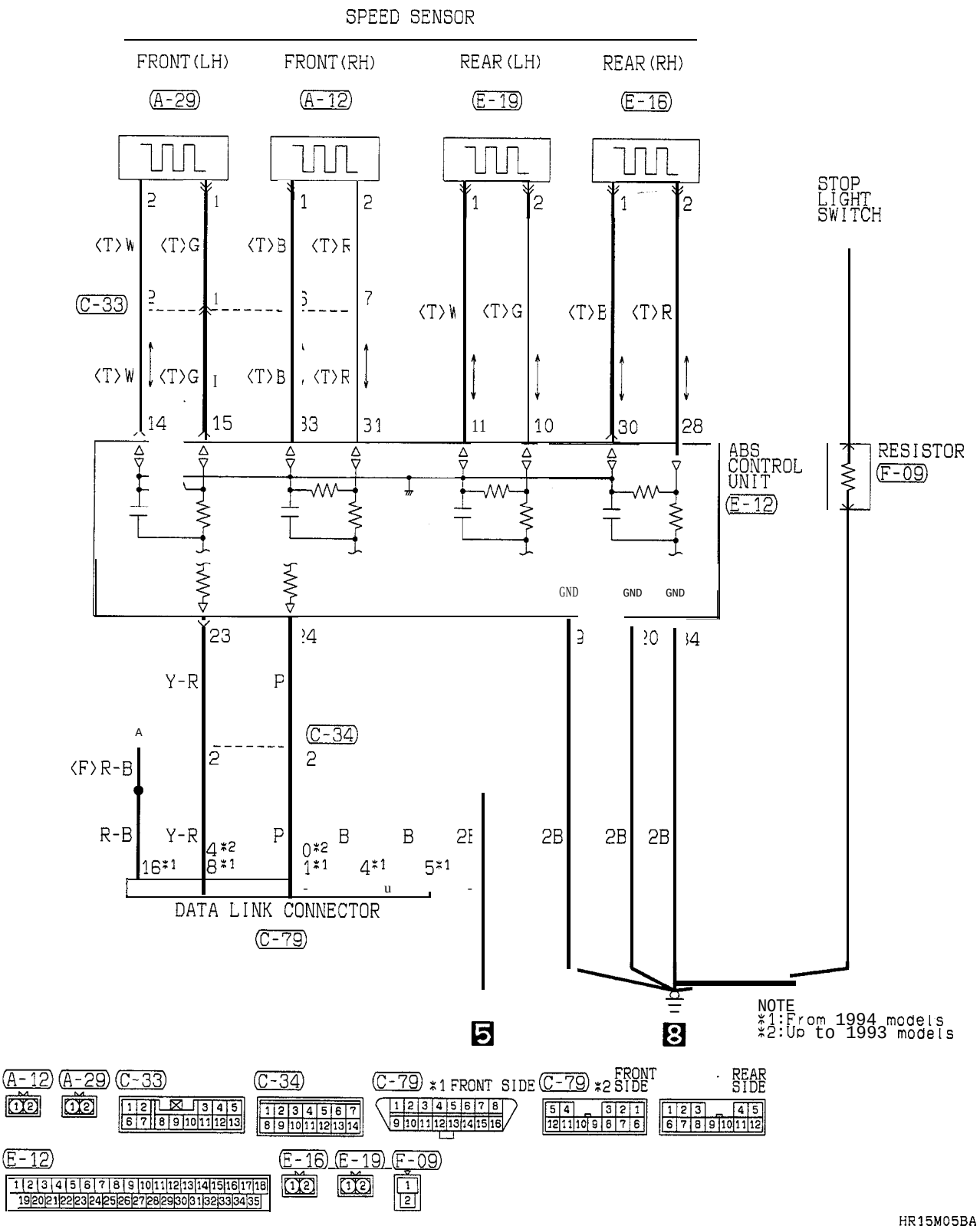

HR15M05BA

TSB Revision

NOTES

ANTI-LOCK BRAKING SYSTEM (ABS) CIRCUIT (FROM NOVEMBER, 1993)

<FWD> (HATCHBACK)

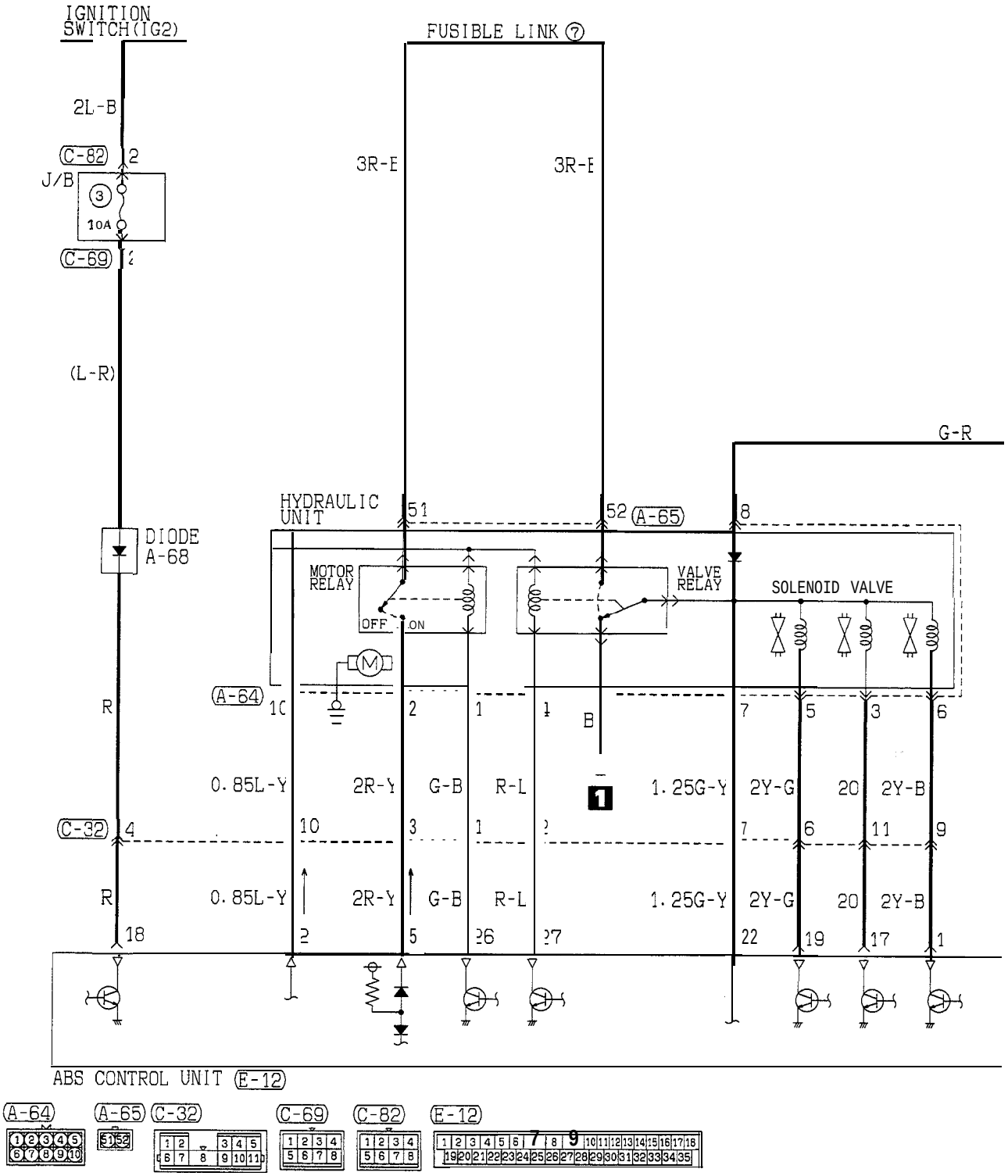

HR15M06AA

TSB Revision

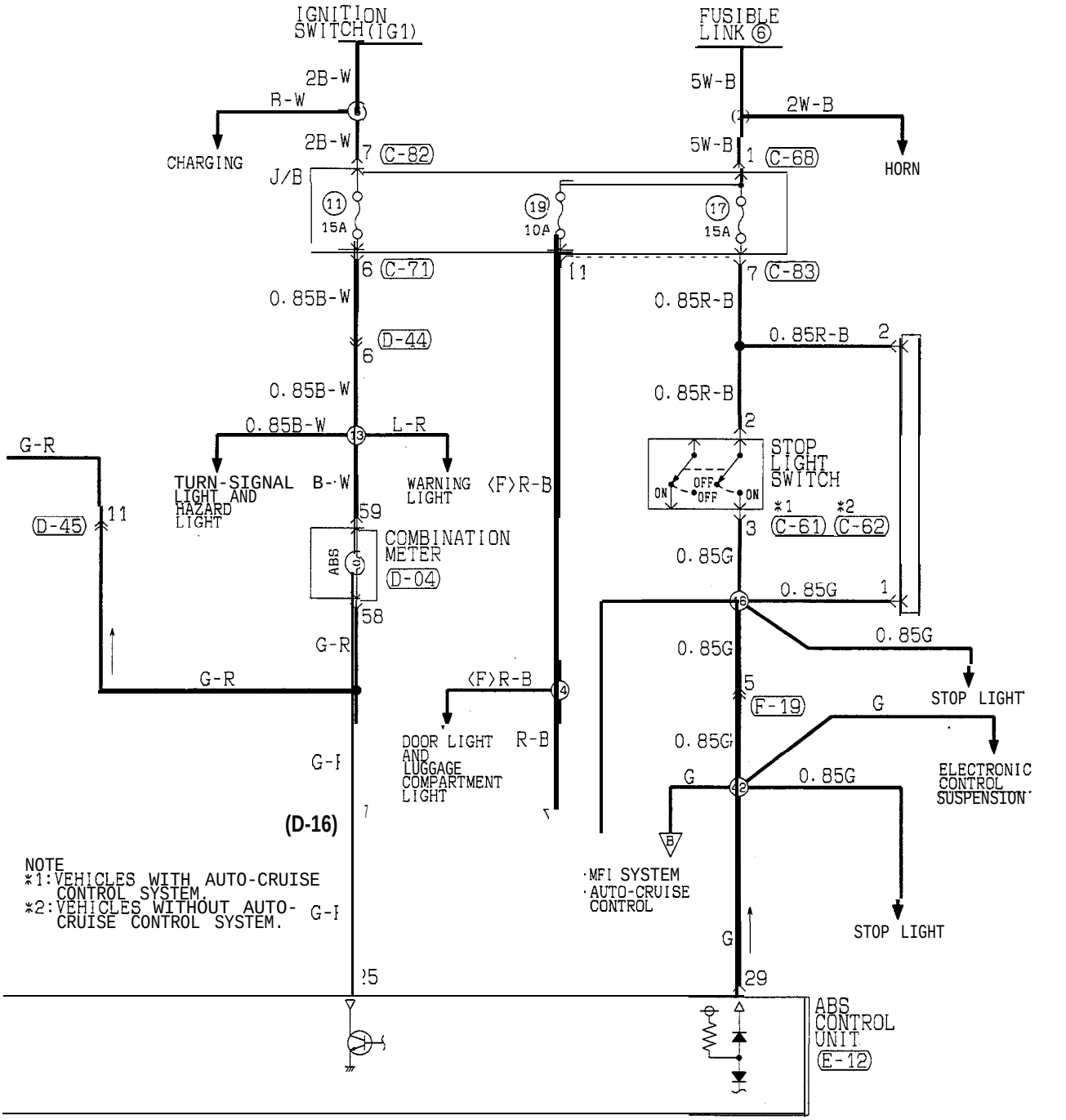

TSB Revision

ANTI-LOCK BRAKING SYSTEM (ABS) CIRCUIT (FROM NOVEMBER, 1993) <FWD> (HATCHBACK) (CONTINUED)

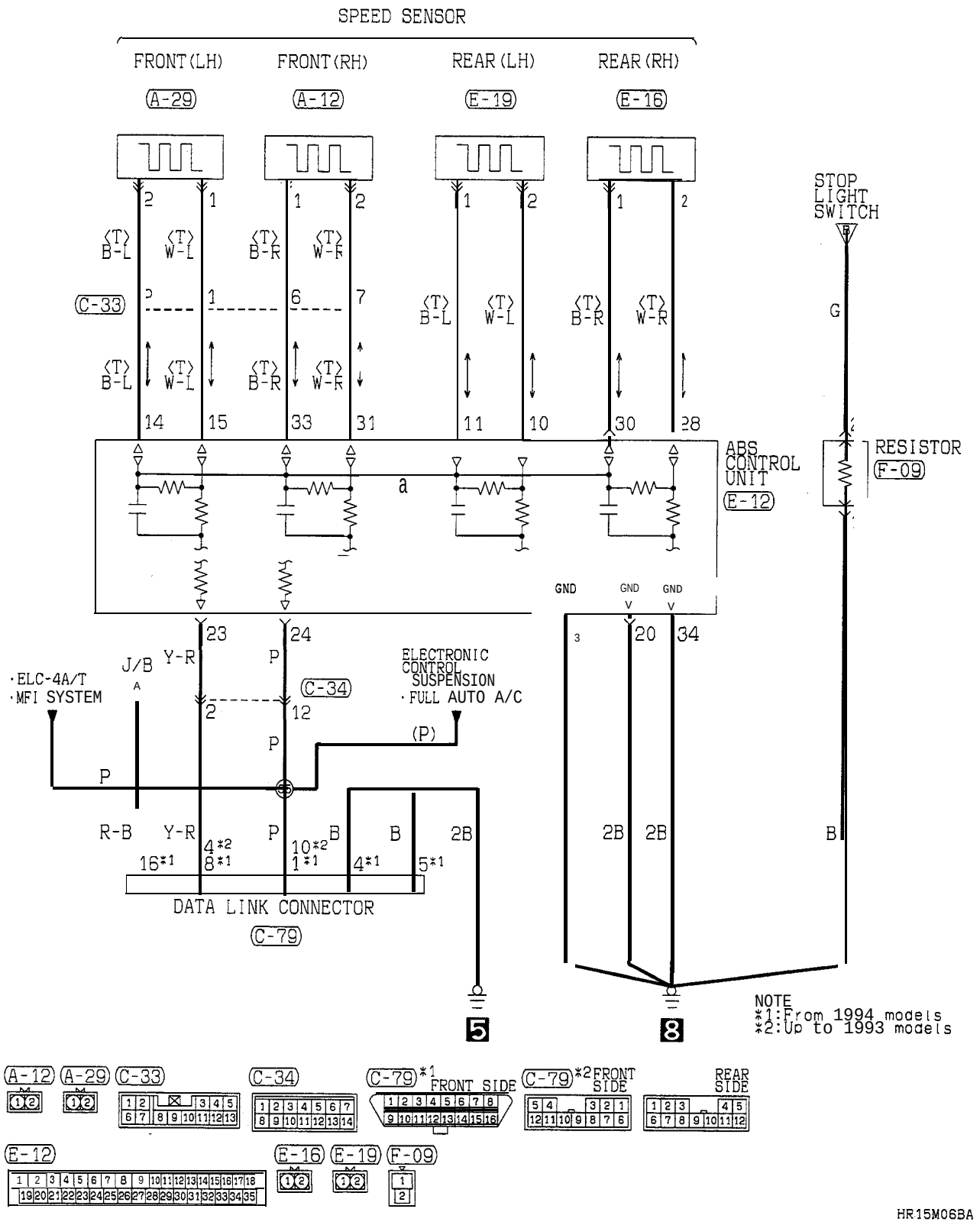

TSB Revision

NOTES

ANTI-LOCK BRAKING SYSTEM (ABS) CIRCUIT (1995 MODELS)

<FWD> (CONVERTIBLE)

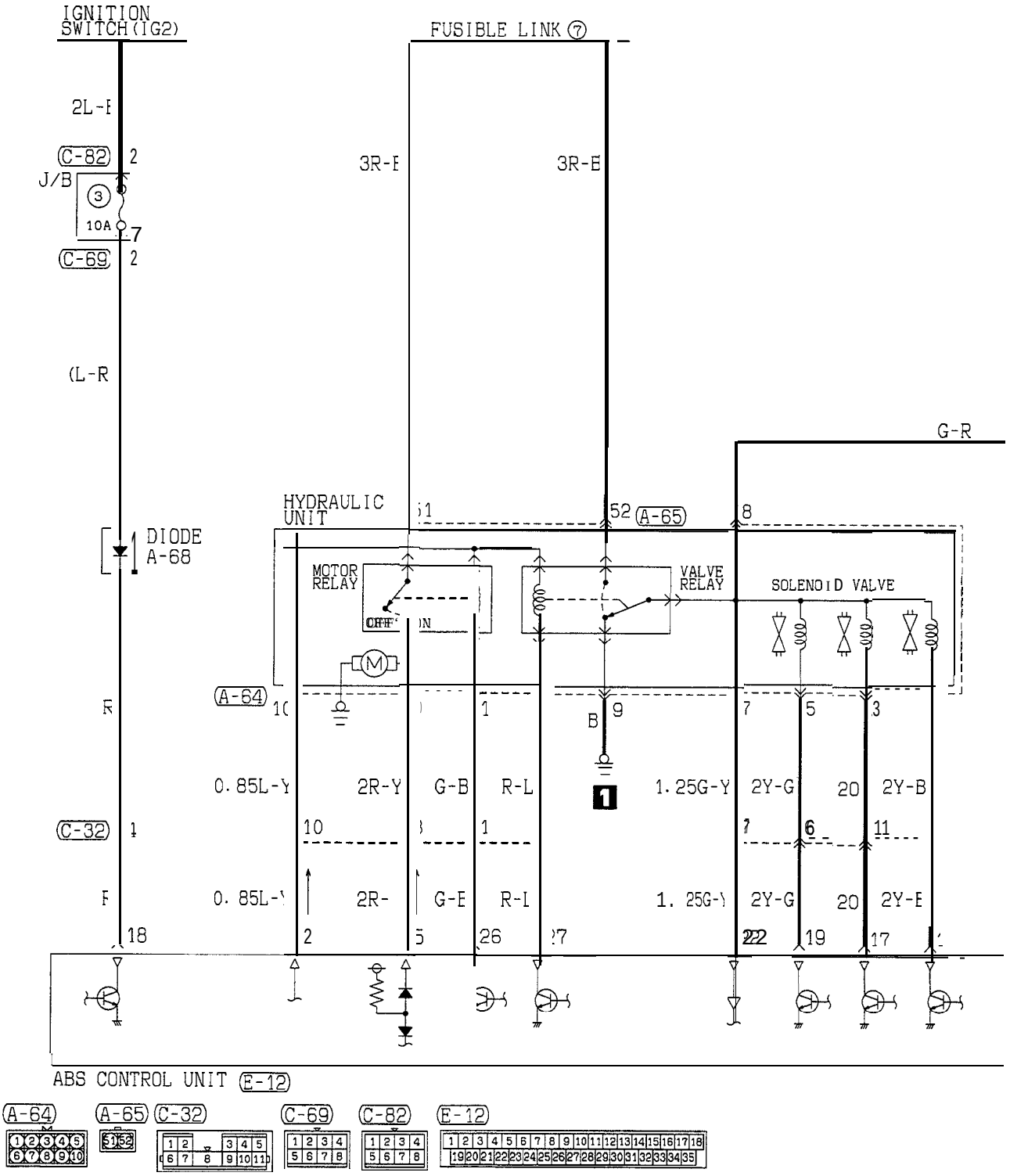

HR15M07AA

TSB Revision

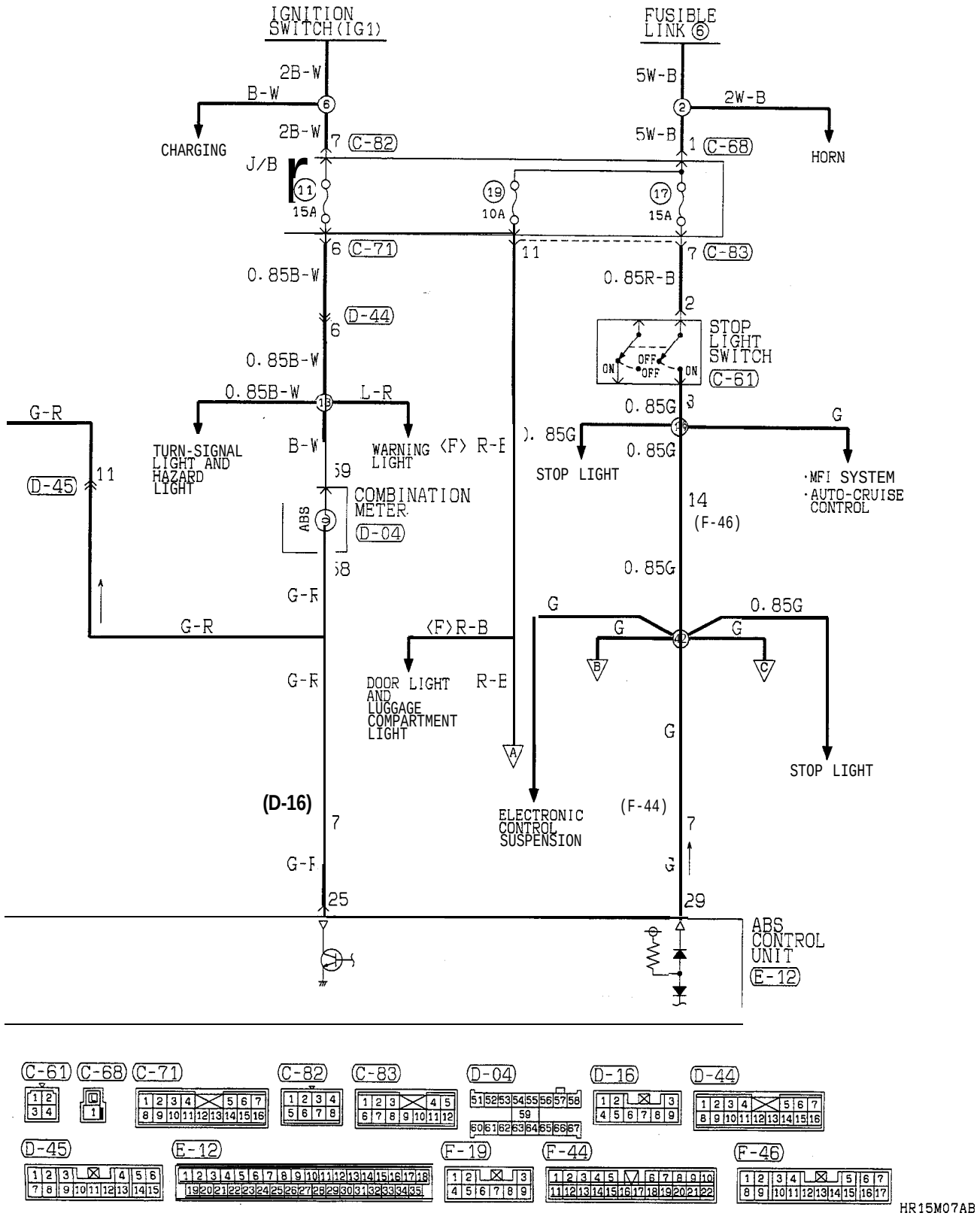

HR15M07AB

TSB Revision

ANTI-LOCK BRAKING SYSTEM (ABS) CIRCUIT (1995 MODELS) <FWD> (CONVERTIBLE) (CONTINUED)

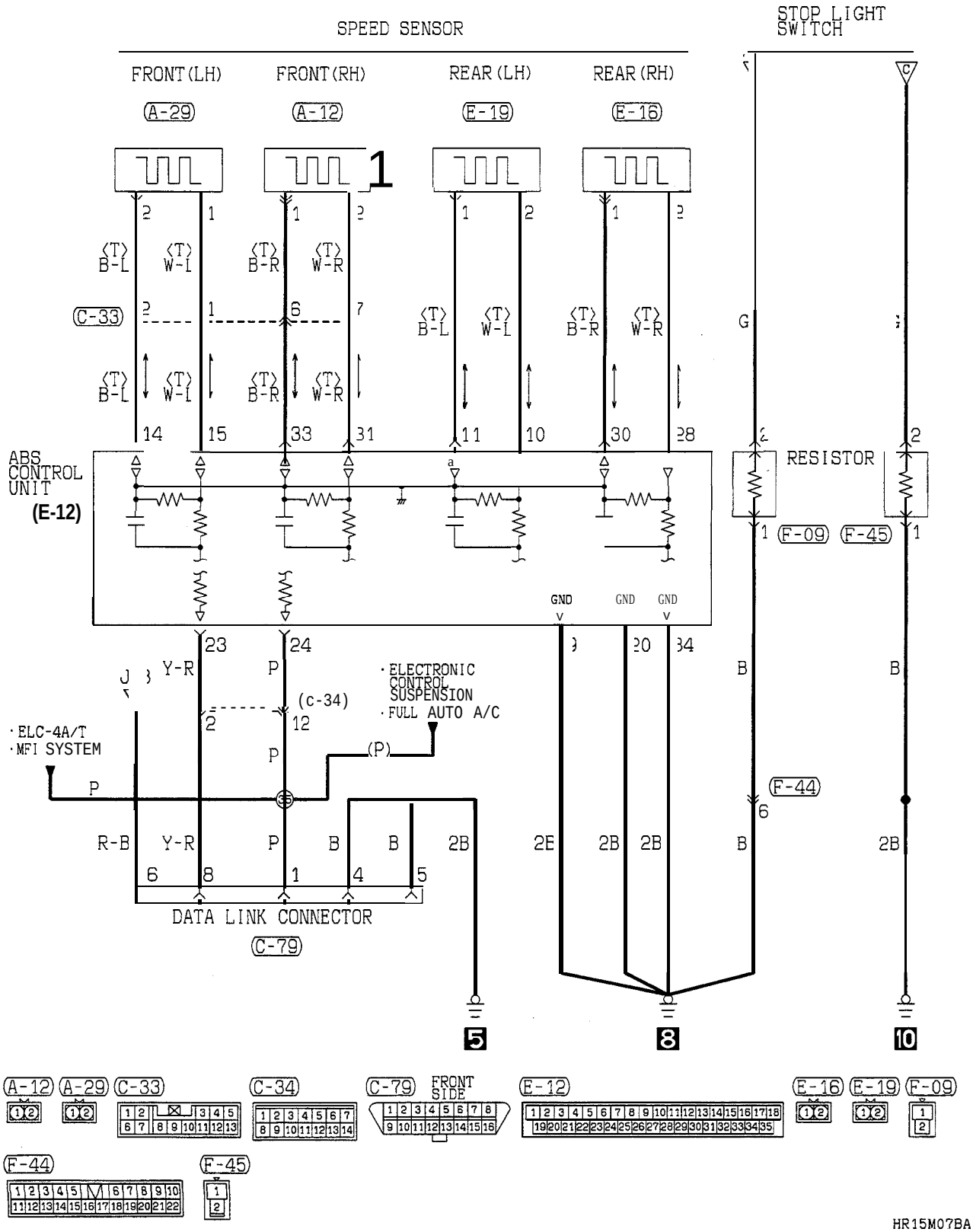

TSB Revision

NOTES

ANTI-LOCK BRAKING SYSTEM (ABS) CIRCUIT (UP TO OCTOBER, 1993)

<AWD>

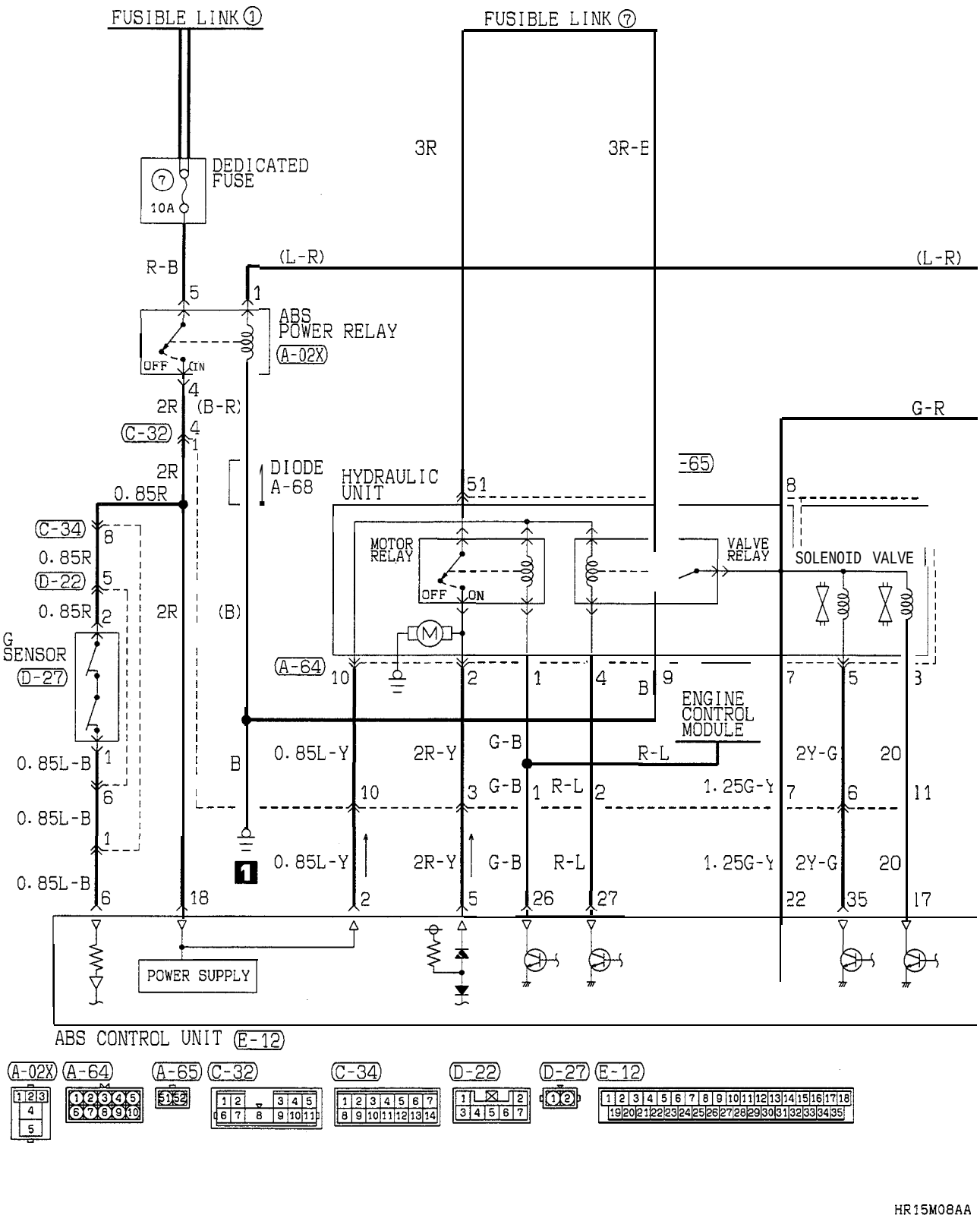

HR15M08AA

TSB Revision

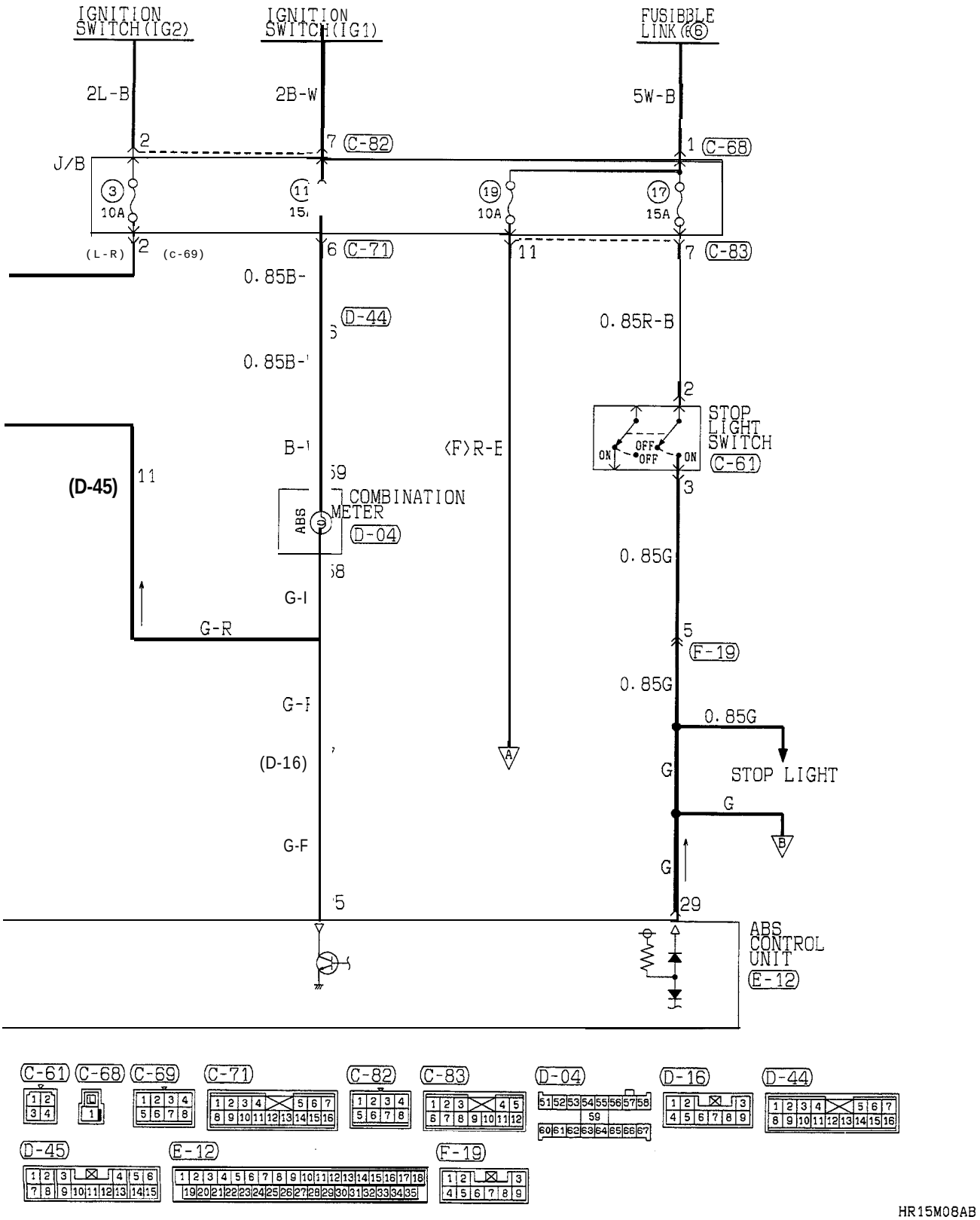

TSB Revision

ANTI-LOCK BRAKING SYSTEM (ABS) CIRCUIT (UP TO OCTOBER, 1993) <AWD> (CONTINUED)

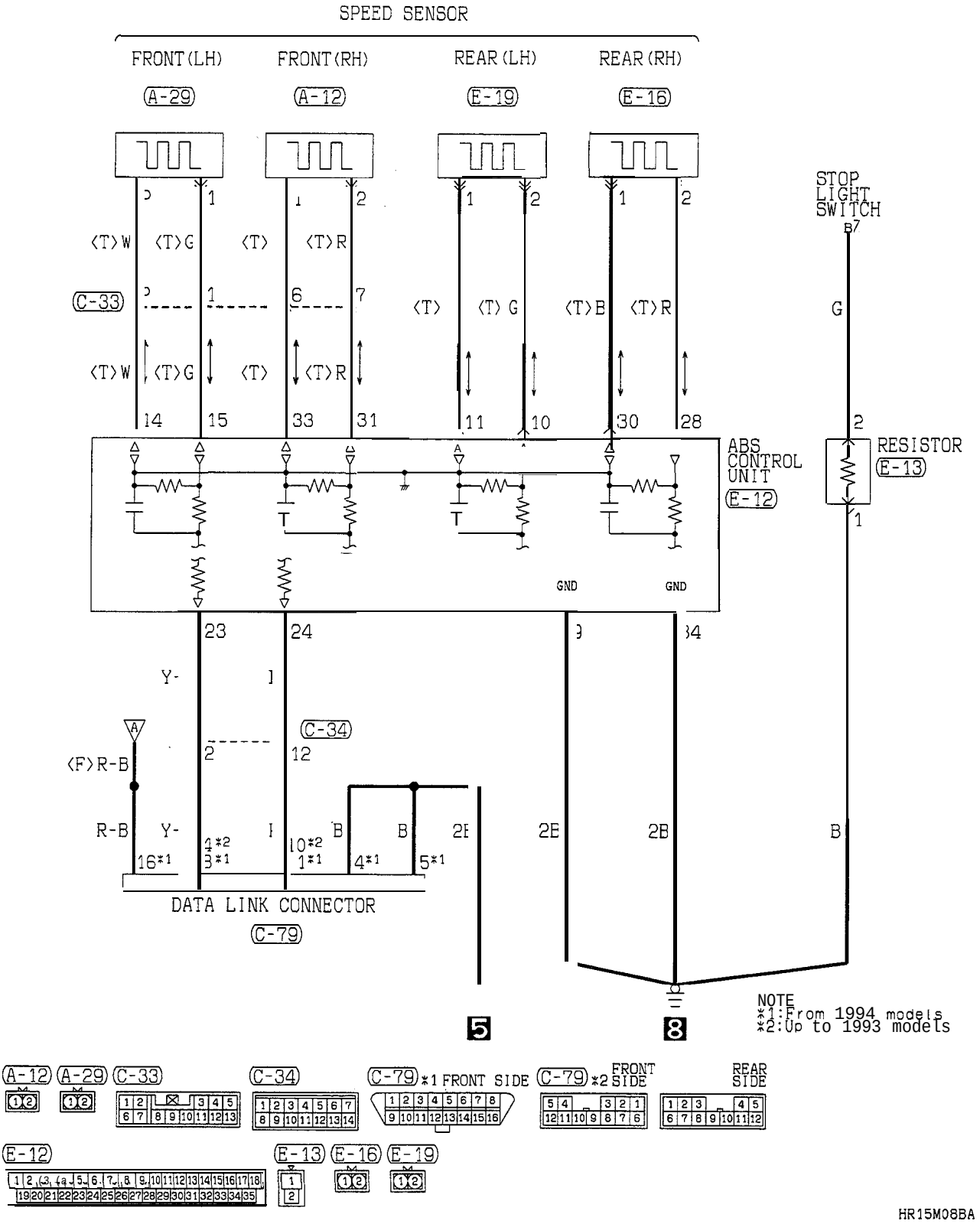

HR15M08BA

TSB Revision

NOTES

ANTI-LOCK BRAKING SYSTEM (ABS) CIRCUIT (FROM NOVEMBER, 1993)

<AWD> (HATCHBACK)

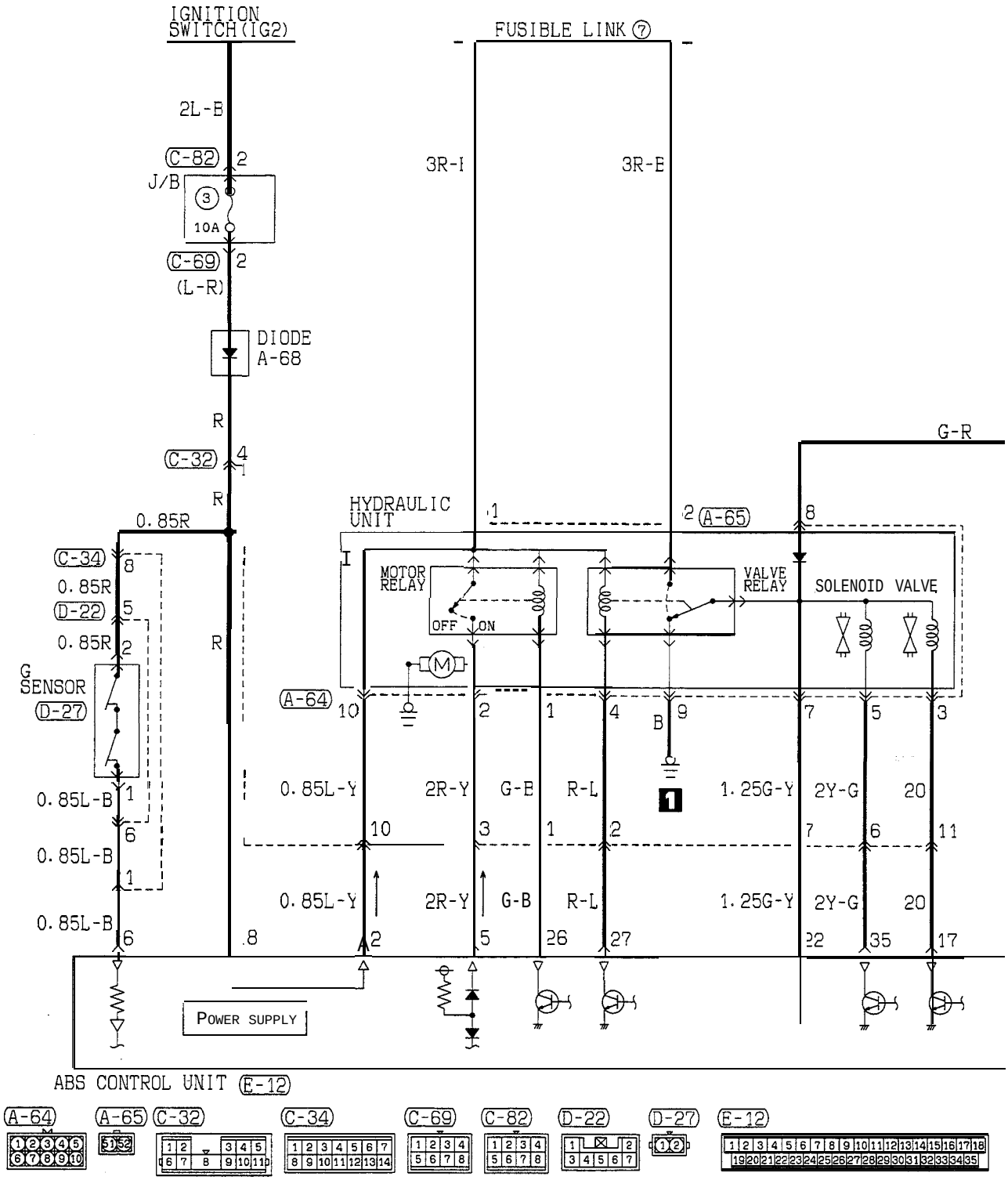

HR15M09AA

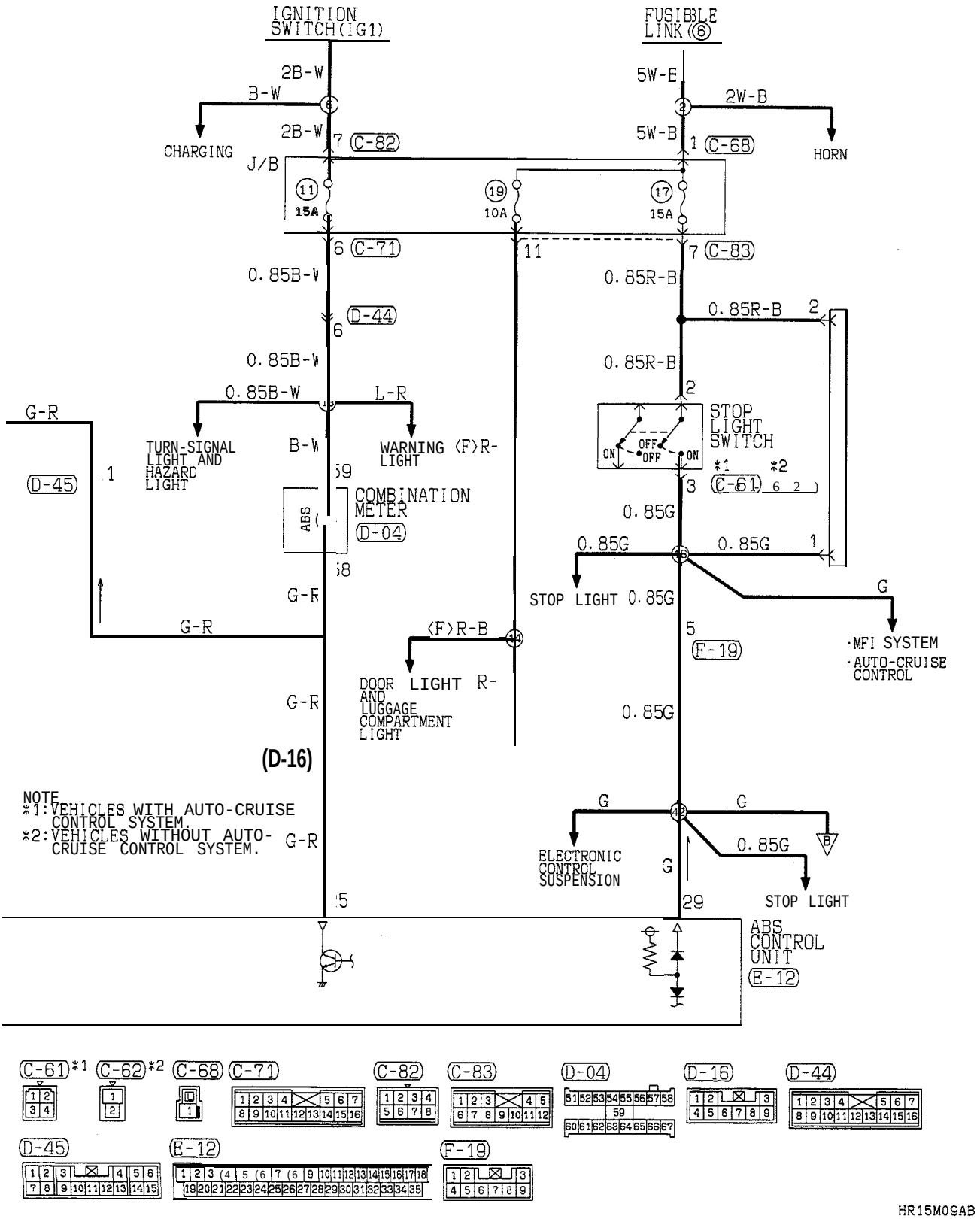

TSB Revision

ANTI-LOCK BRAKING SYSTEM (ABS) CIRCUIT (FROM NOVEMBER, 1993) <AWD> (HATCHBACK) (CONTINUED)

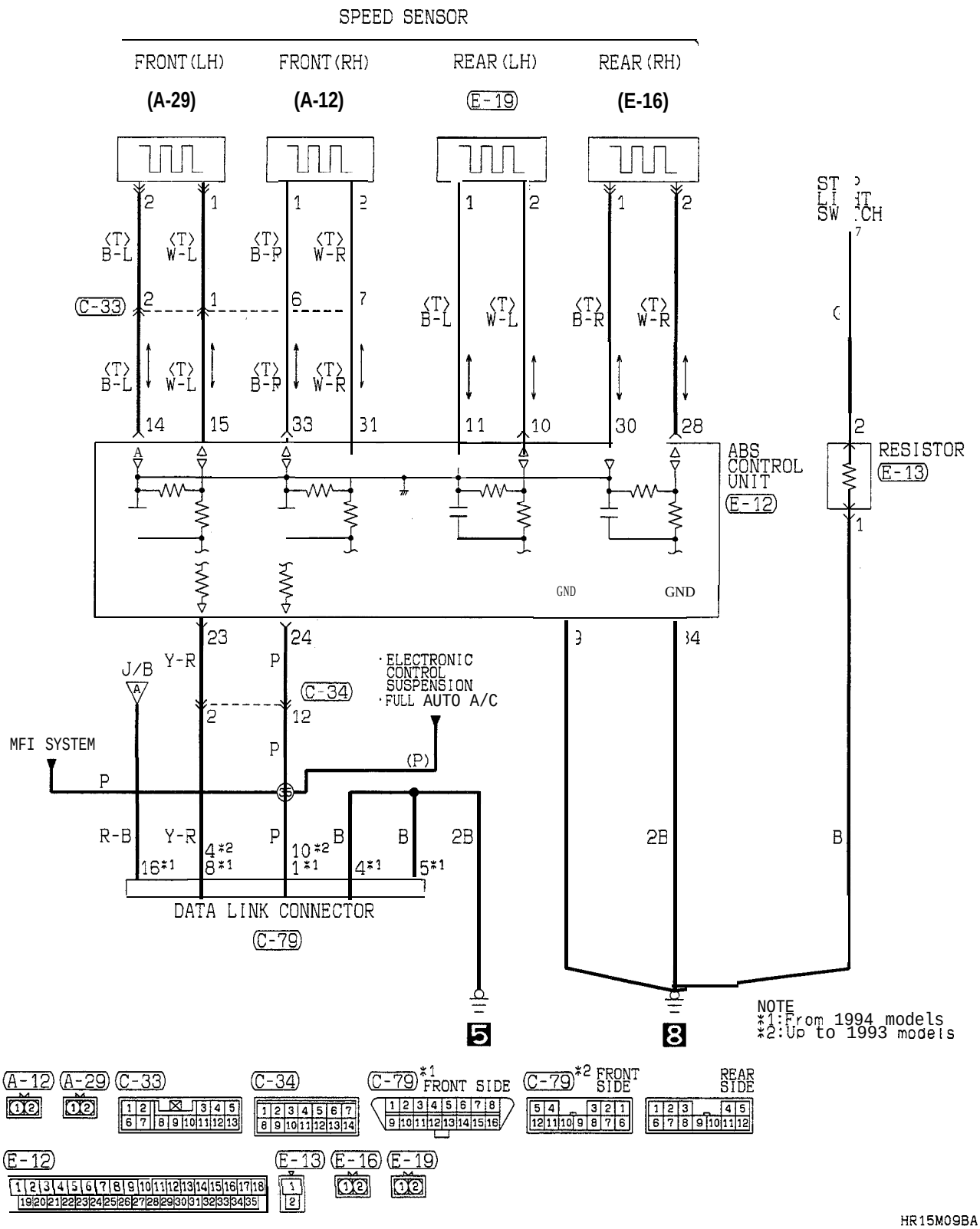

TSB Revision

NOTES

ANTI-LOCK BRAKING SYSTEM (ABS) CIRCUIT (1995 MODELS)

<AWD> (CONVERTIBLE)

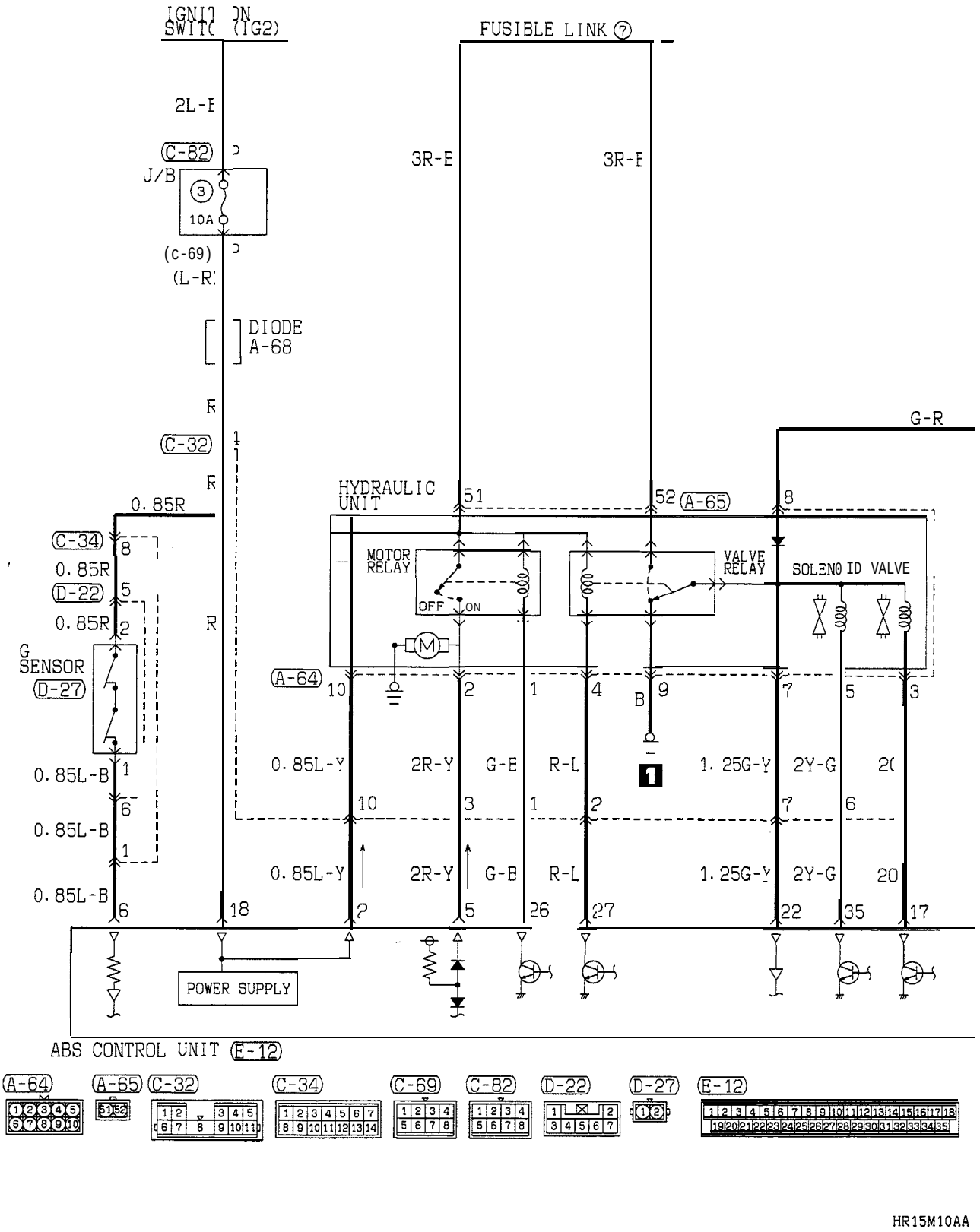

HR15M10AA

TSB Revision

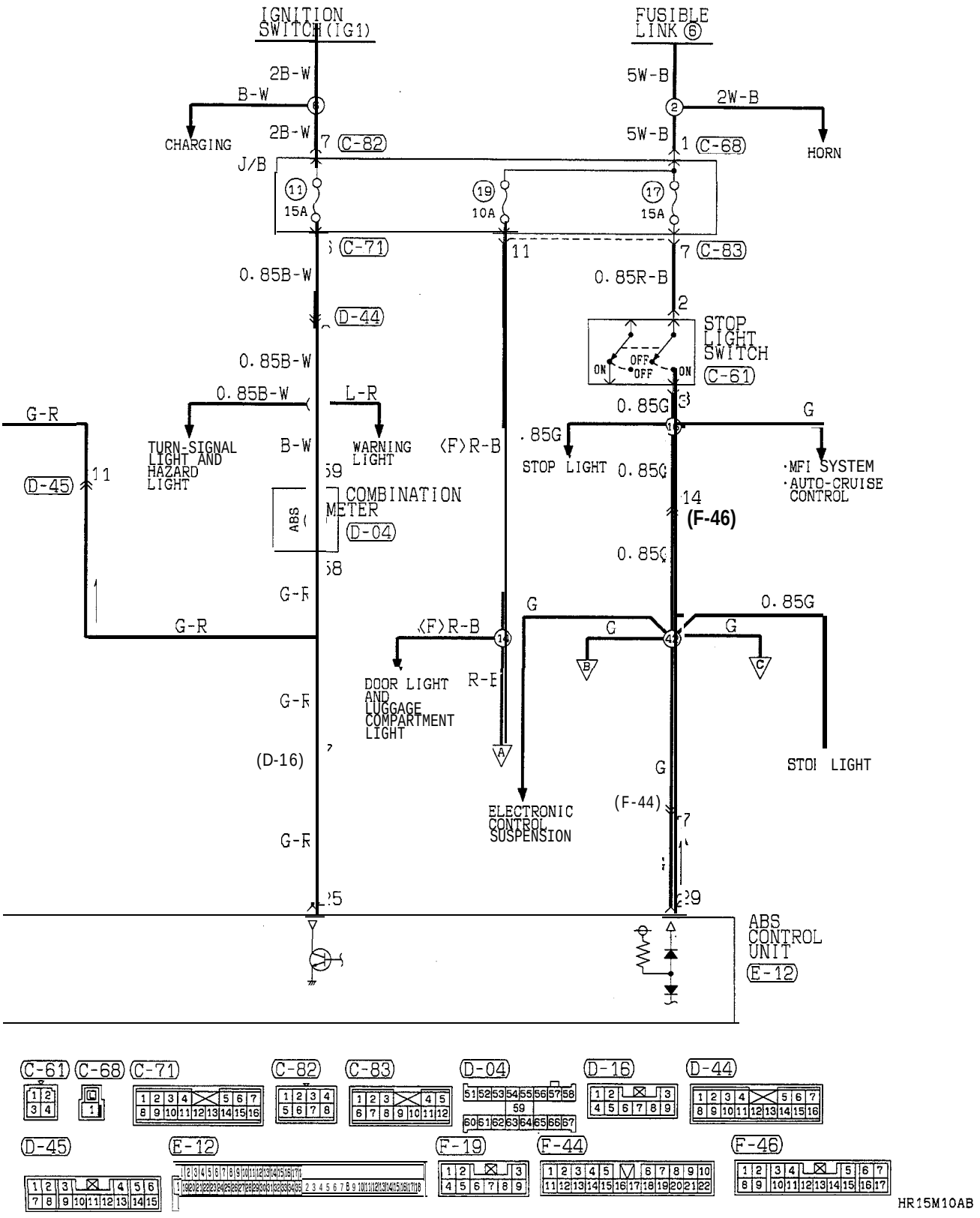

TSB Revision

ANTI-LOCK BRAKING SYSTEM (ABS) CIRCUIT (1995 MODELS) <AWD> (CONVERTIBLE) (CONTINUED)

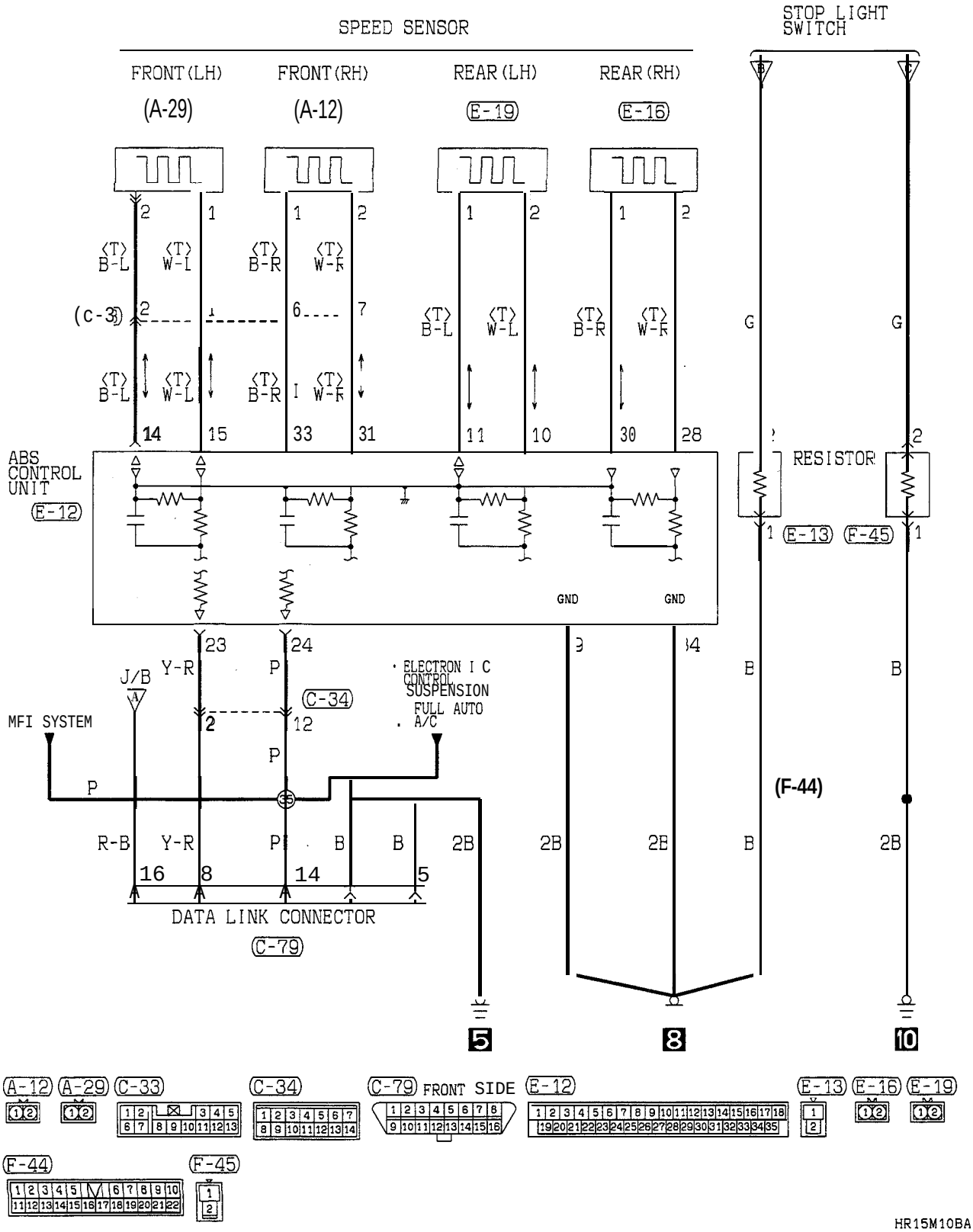

TSB Revision

NOTES

ANTI-LOCK BRAKING SYSTEM (ABS) CIRCUIT (FROM 1996 MODELS)

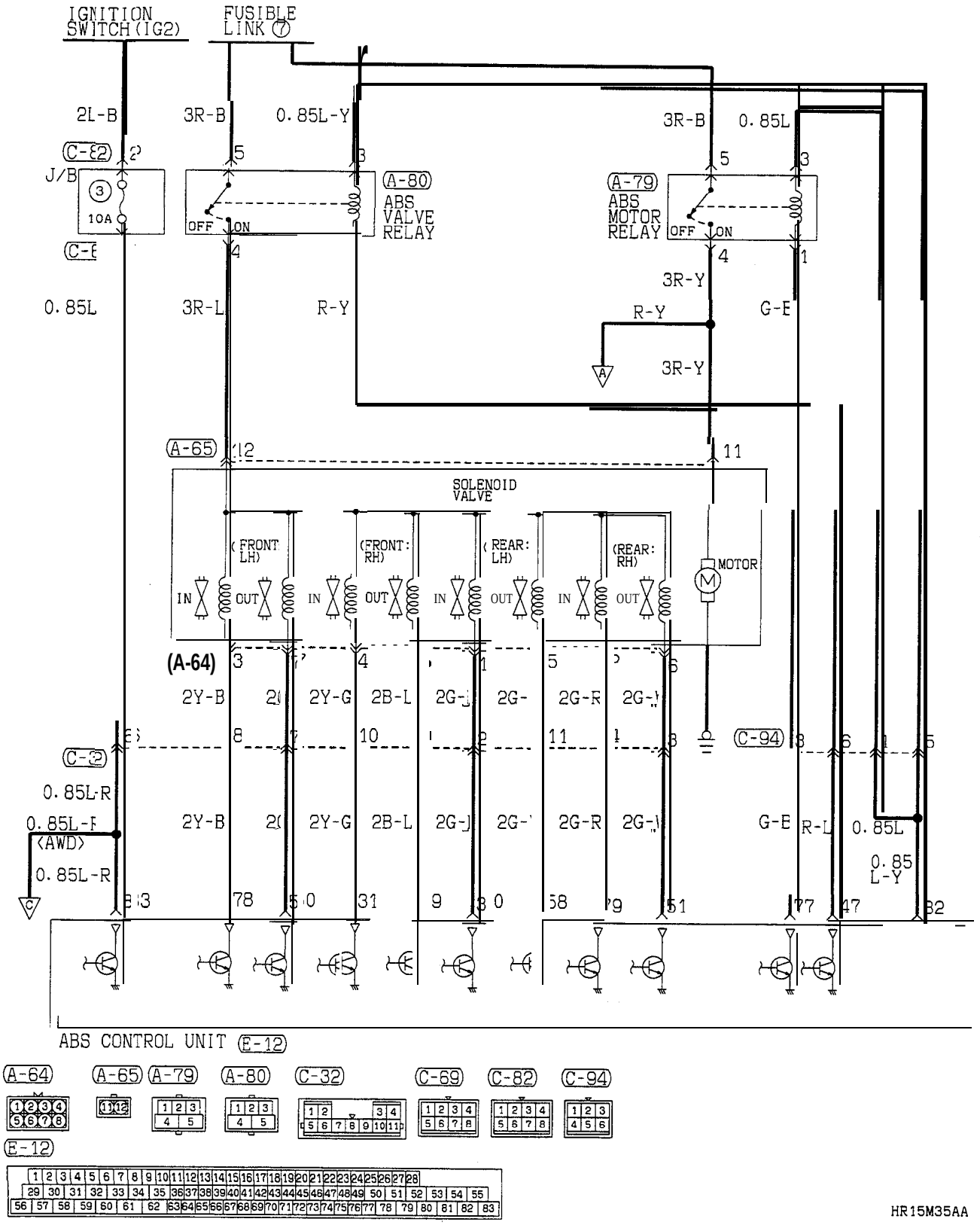

HR15M35AA

TSB Revision

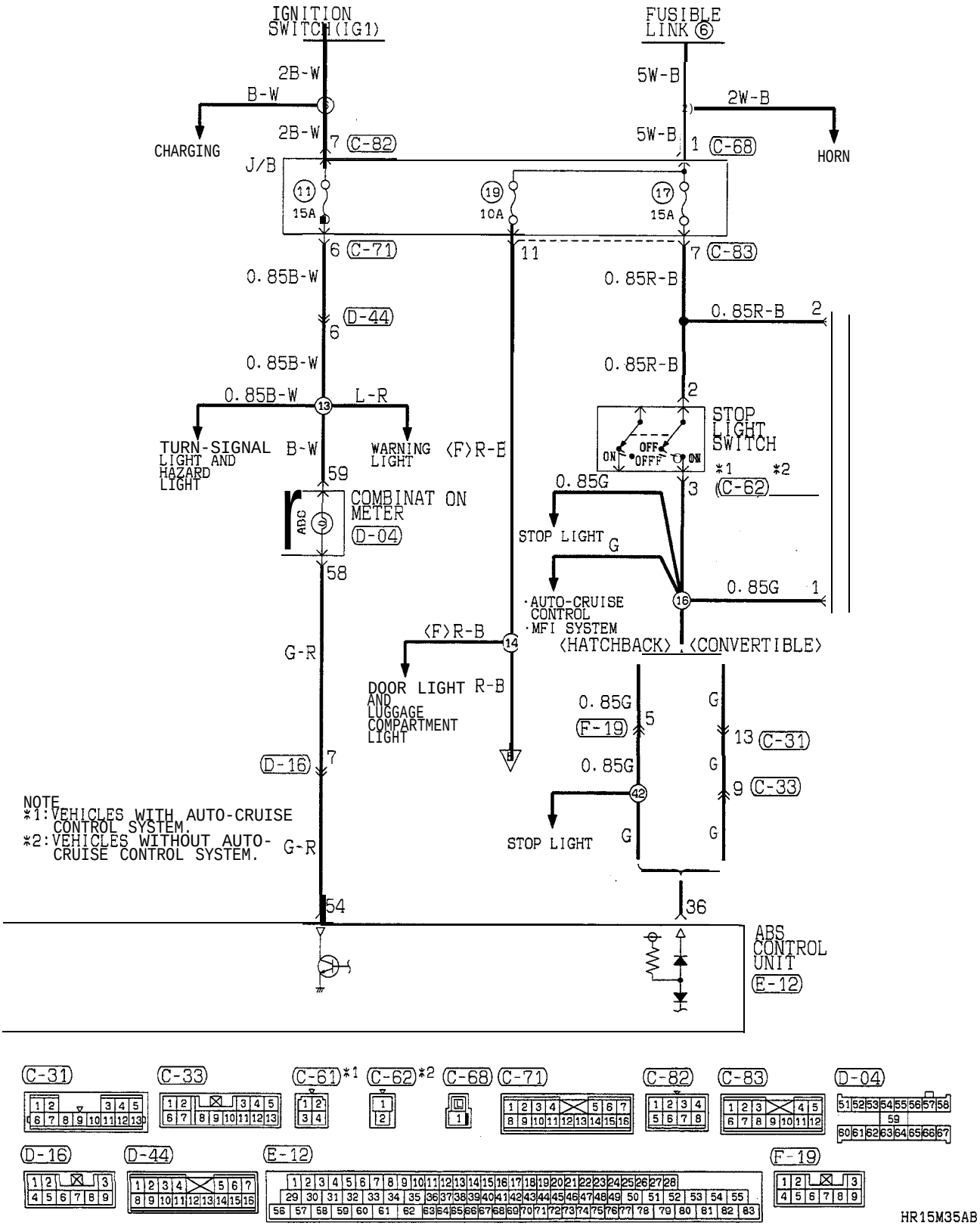

TSB Revision

ANTI-LOCK BRAKING SYSTEM (ABS) CIRCUIT (FROM 1996 MODELS) (CONTINUED)

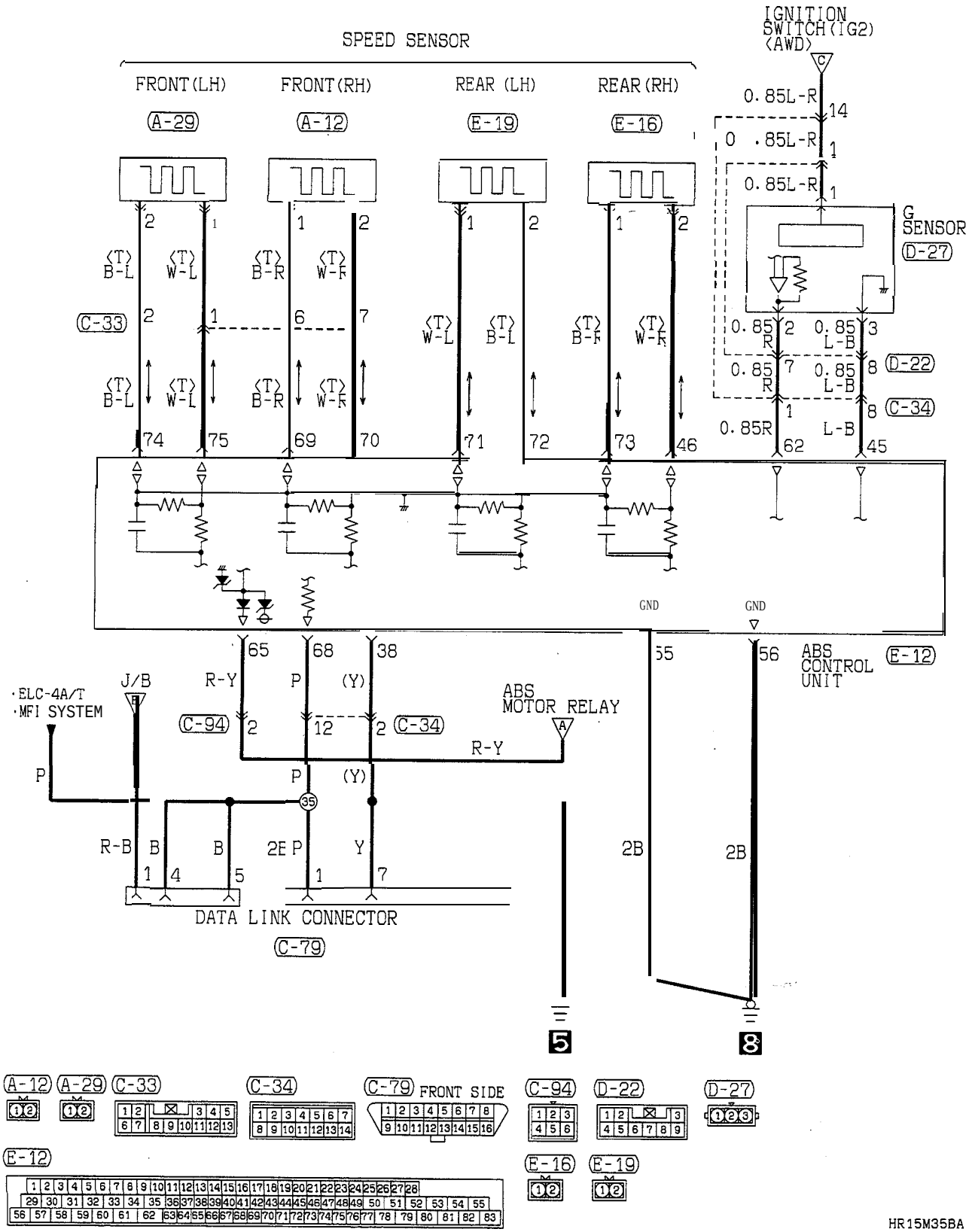

TSB Revision

COMPONENT LOCATION

Name	Symbol	Name	Symbol
ABS control unit	G	G sensor	F
ABS power relay (Up to 1993–October models)	C	Hydraulic unit	A
Data link connector (from 1994 models)	E	Motor relay	A
Data link connector (up to 1993 models)	D	Rear speed sensor	I
Diode (Up to 1995 models)	B	Valve relay	A
Front speed sensor	H		

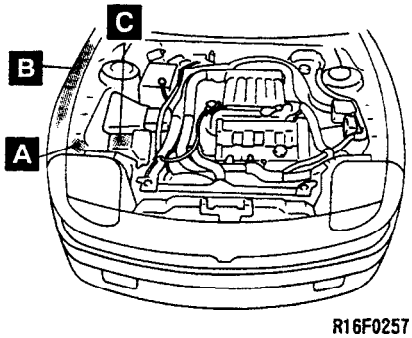

R16F0257

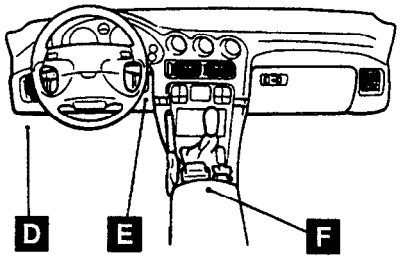

K19F0134

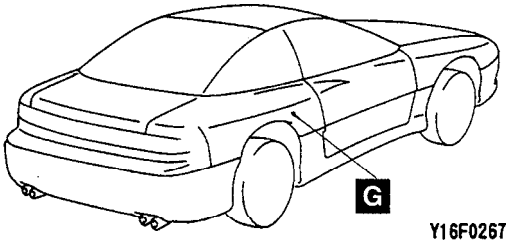

Y16F0267

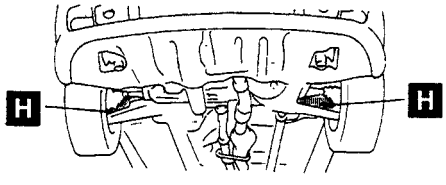

Y16F0040

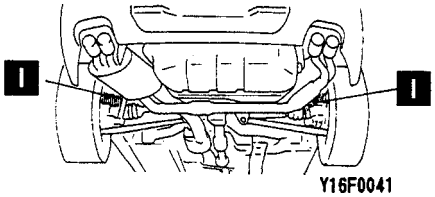

Y16F0041
00002666

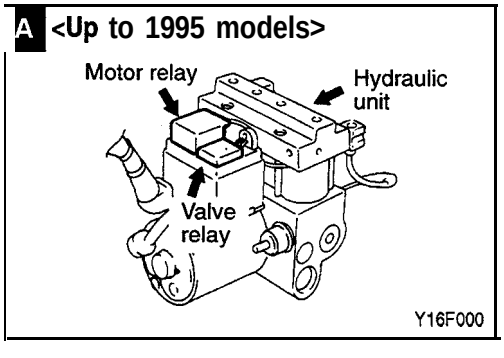

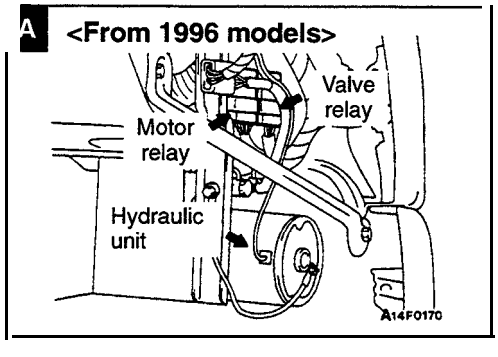

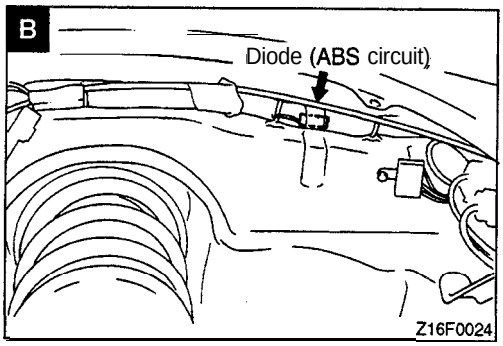

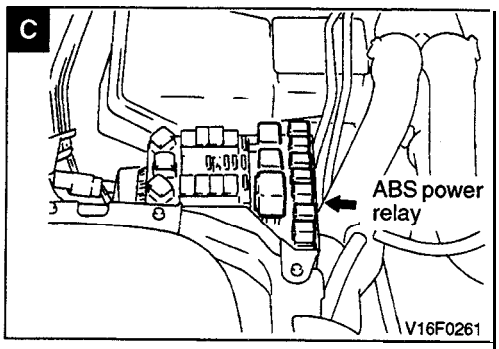

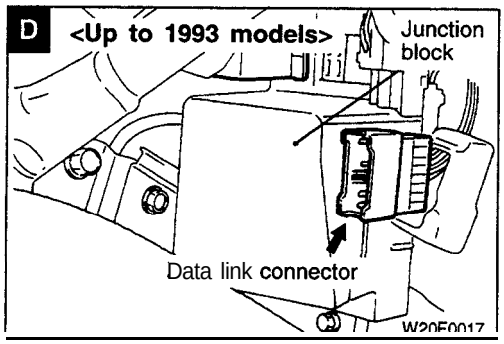

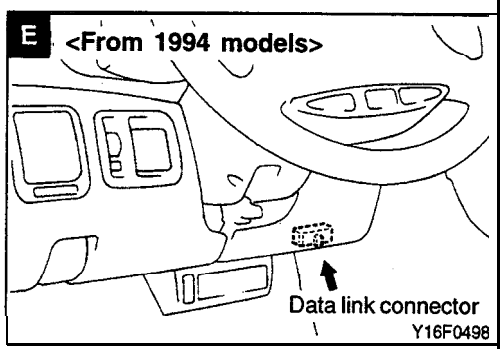

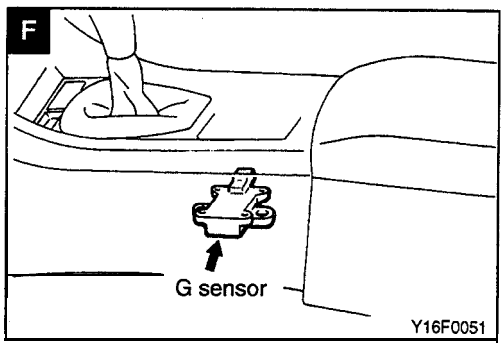

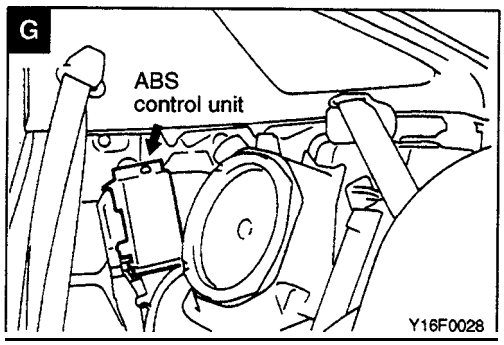

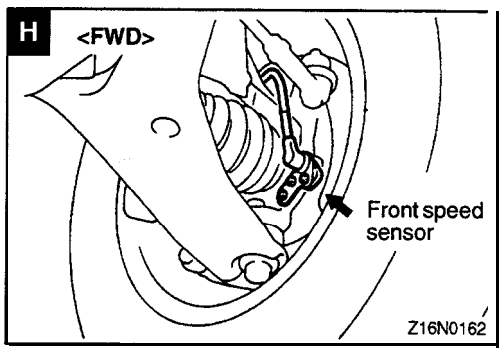

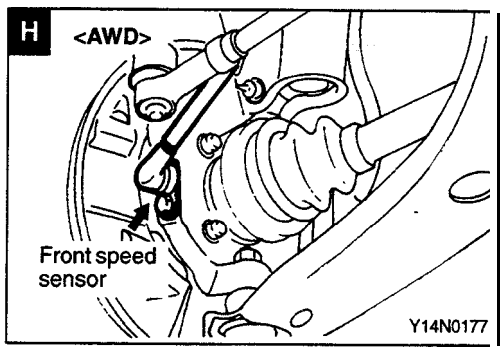

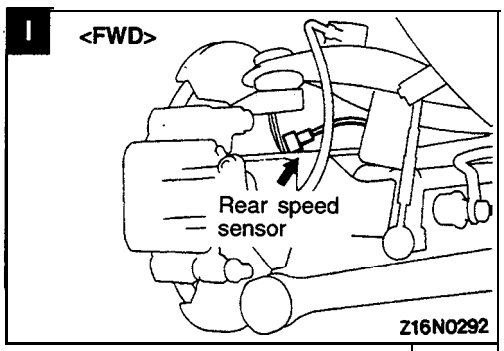

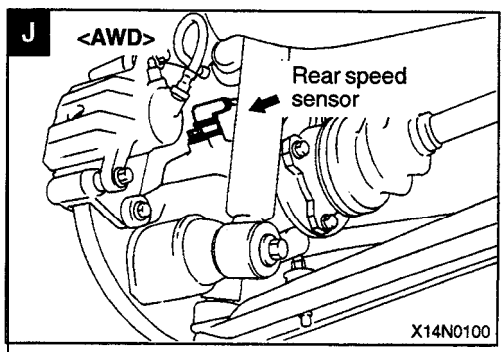

TSB Revision

NOTES

ELECTRONIC CONTROL SUSPENSION (ECS) CIRCUIT (UP TO 1993 MODELS)

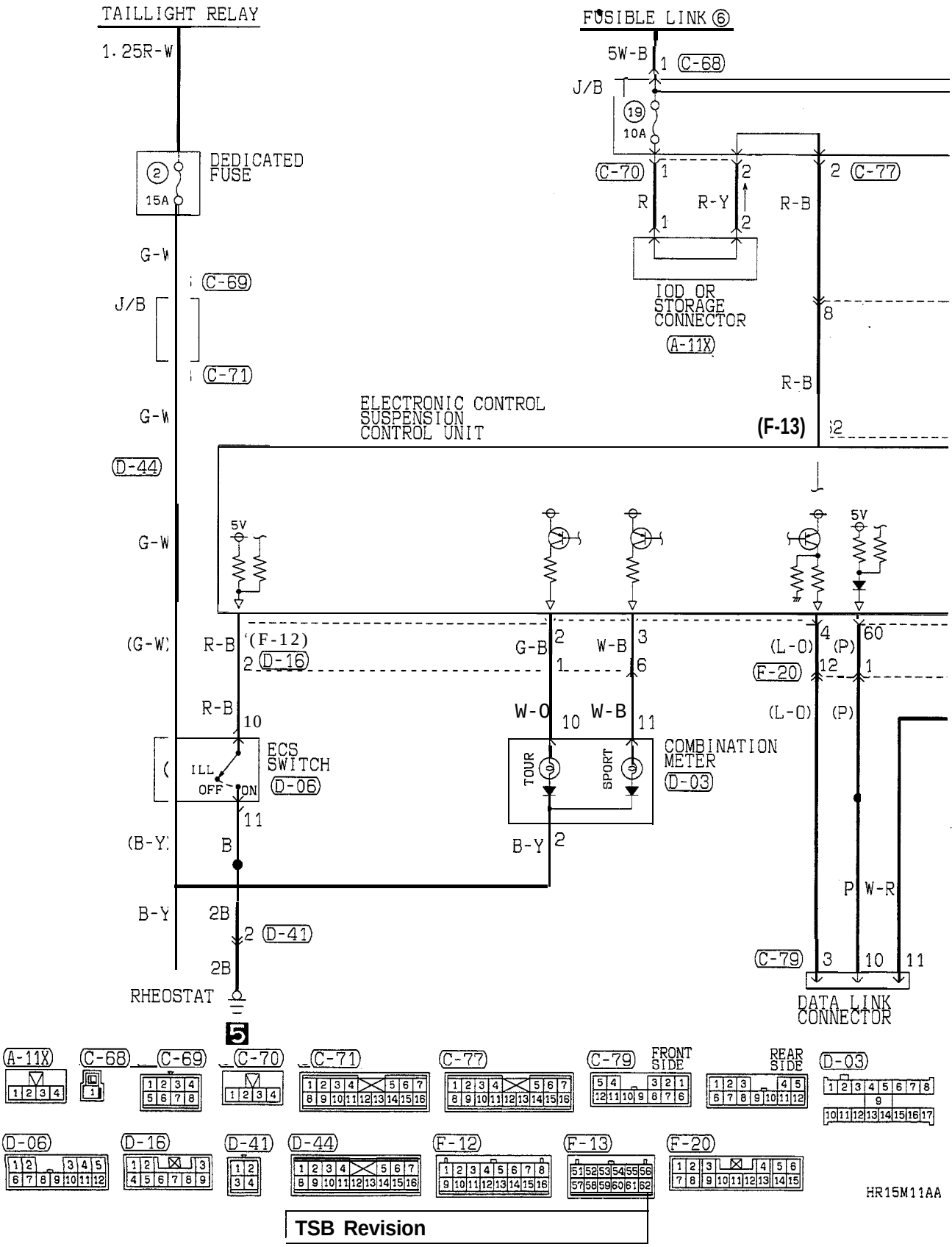

TSB Revision

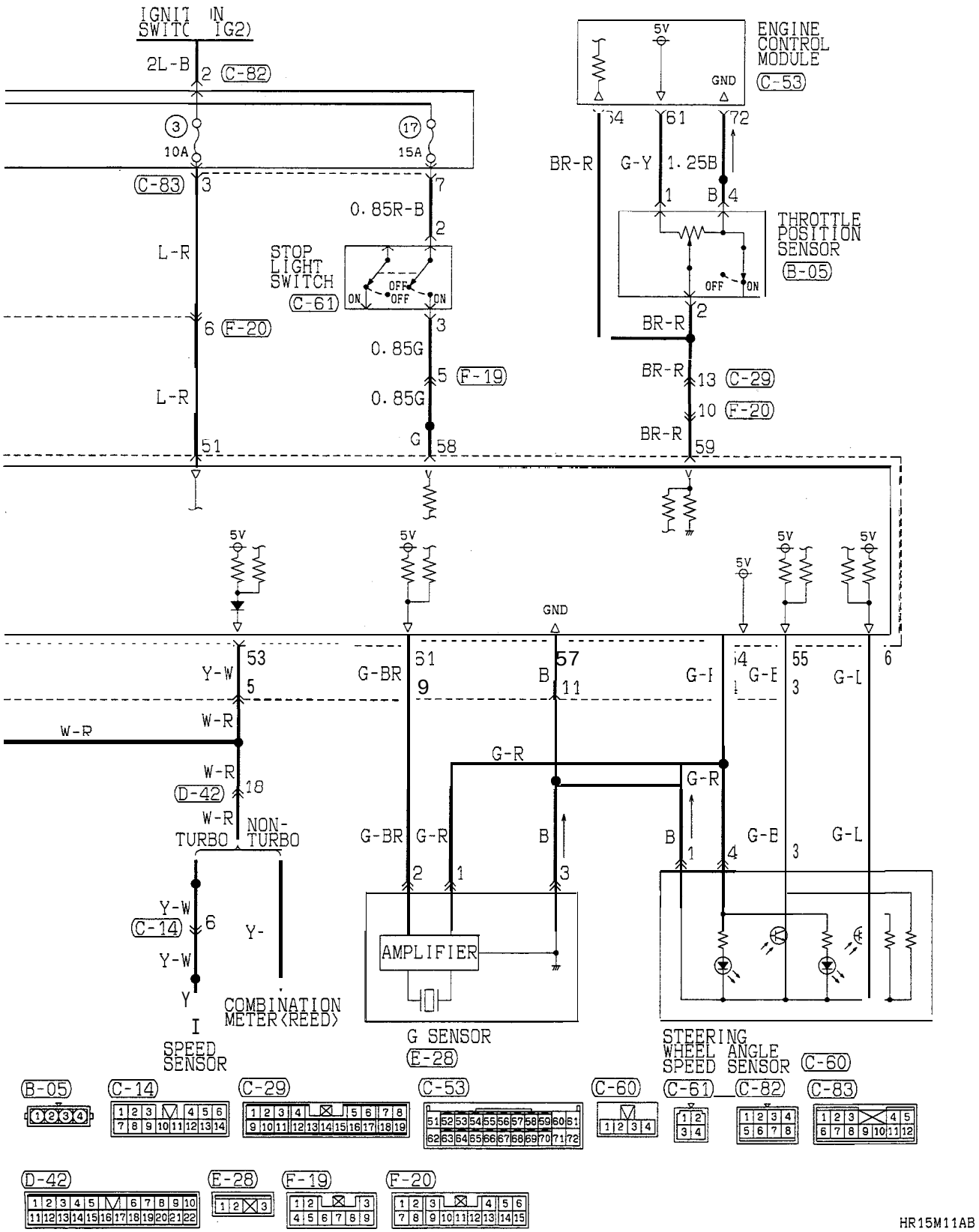

TSB Revision

ELECTRONIC CONTROL SUSPENSION (ECS) CIRCUIT (UP TO 1993 MODELS) (CONTINUED)

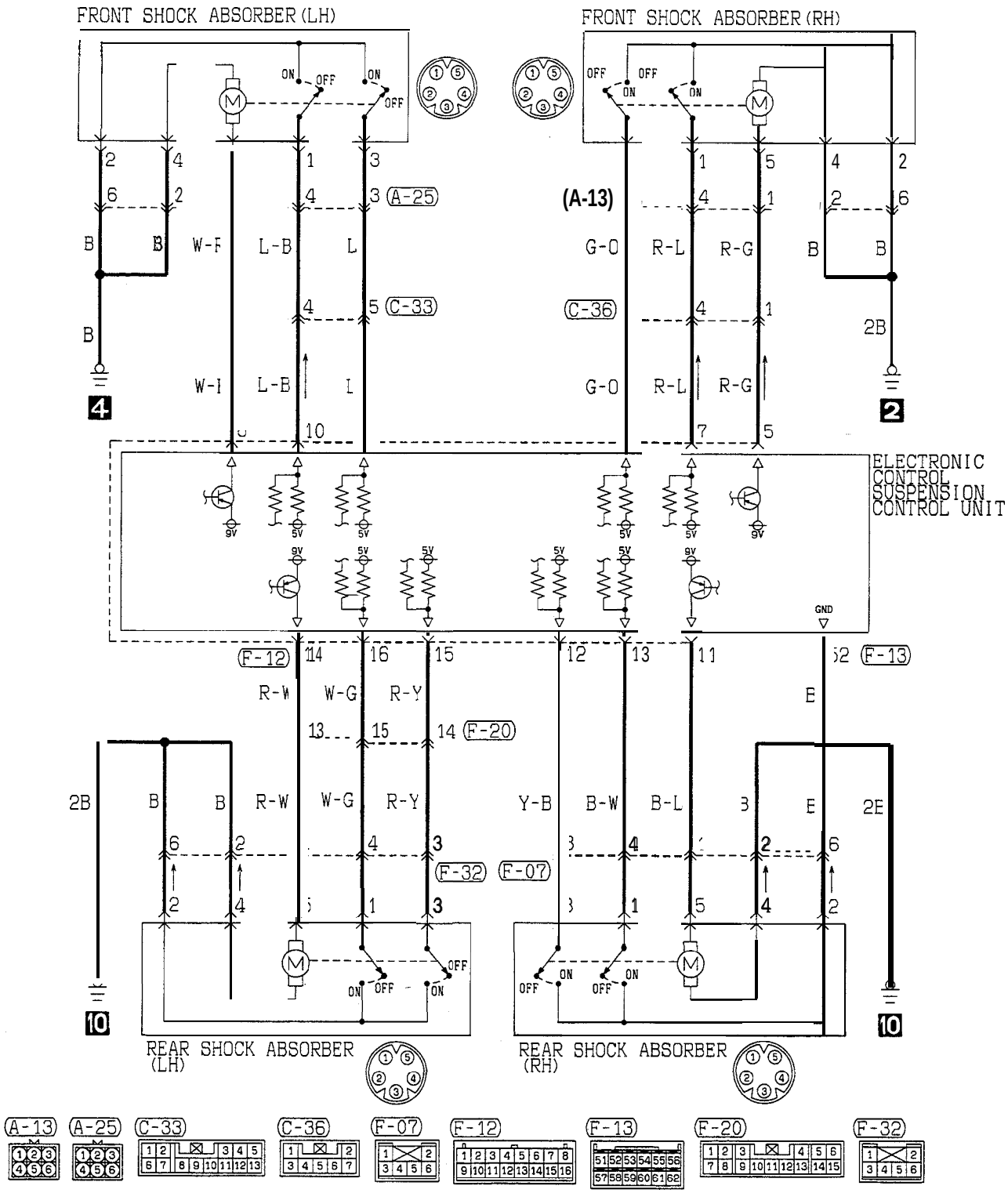

HR15M11BA

TSB Revision

NOTES

ELECTRONIC CONTROL SUSPENSION (ECS) CIRCUIT

(1994 MODELS)

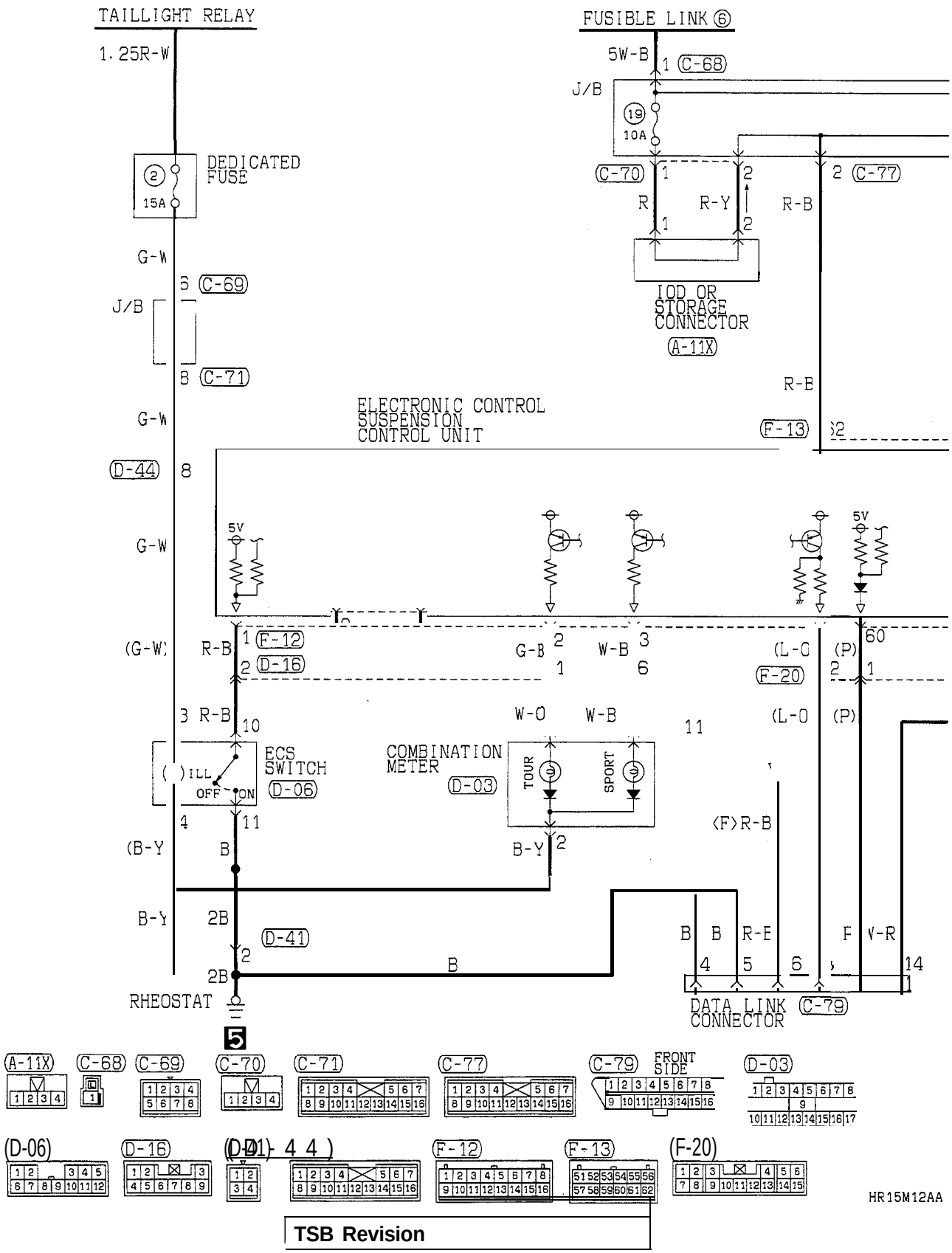

TSB Revision

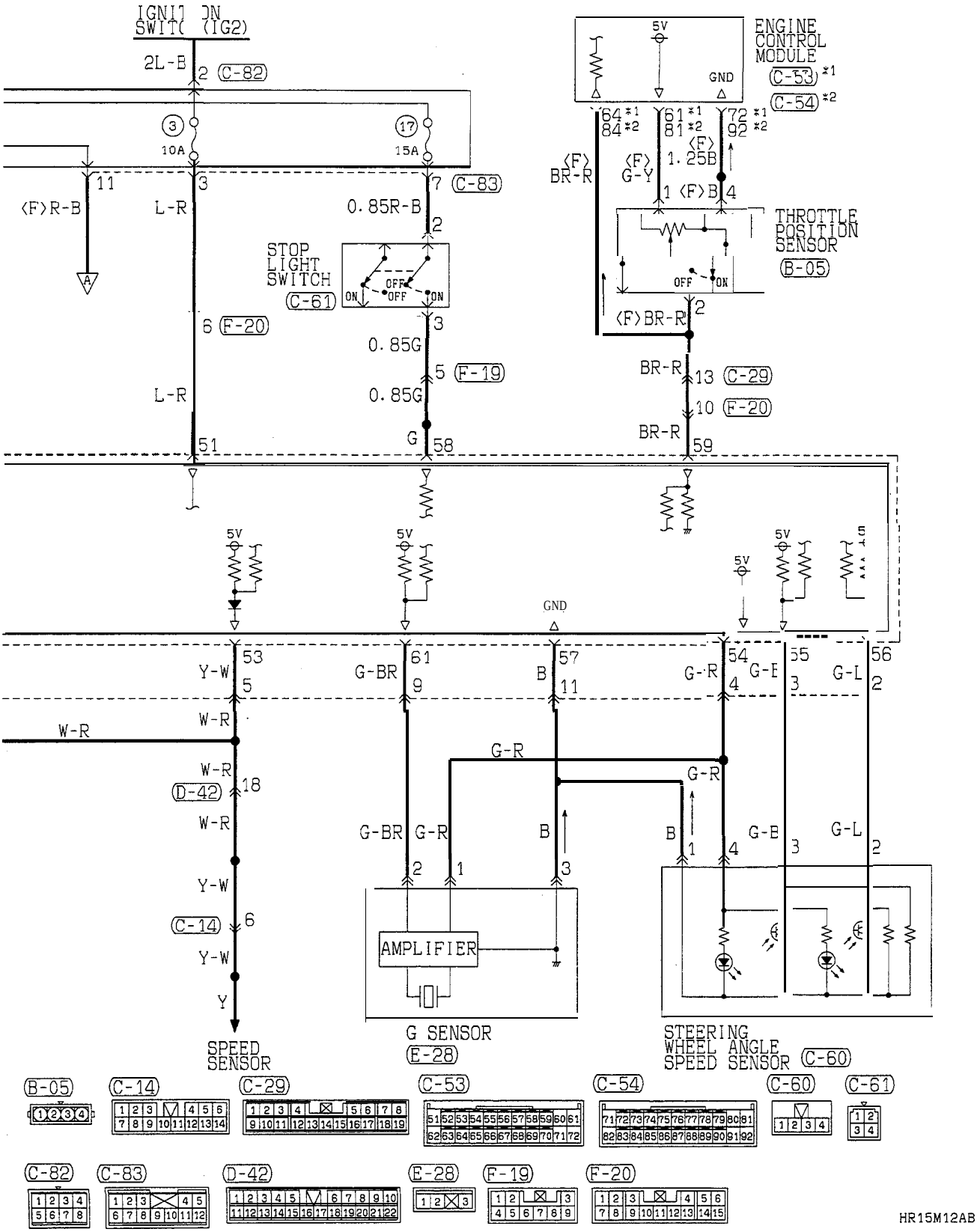

TSB Revision

ELECTRONIC CONTROL SUSPENSION (ECS) CIRCUIT (1994 MODELS) (CONTINUED)

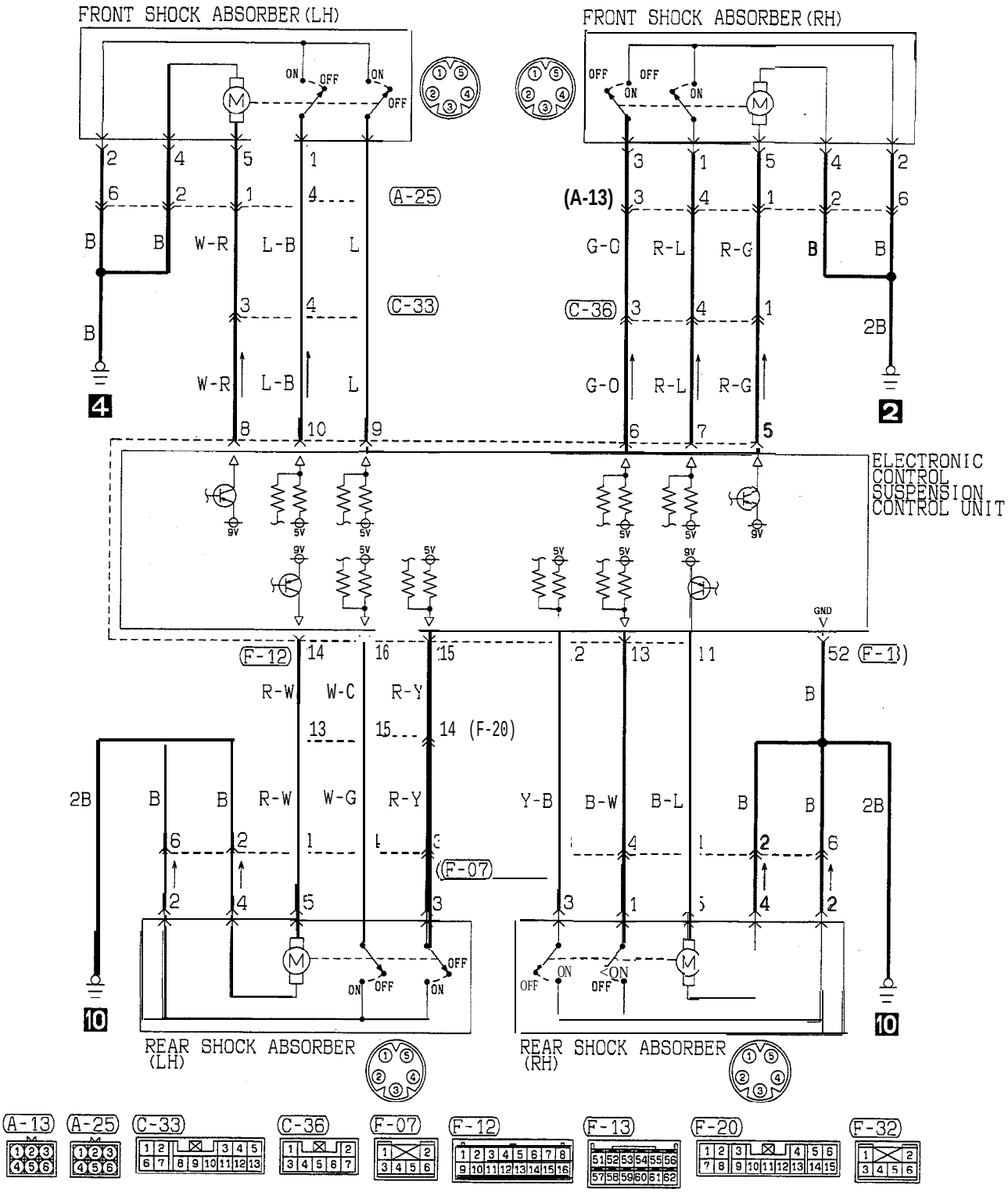

NOTES

ELECTRONIC CONTROL SUSPENSION (ECS) CIRCUIT (1995 MODELS) <HATCHBACK>

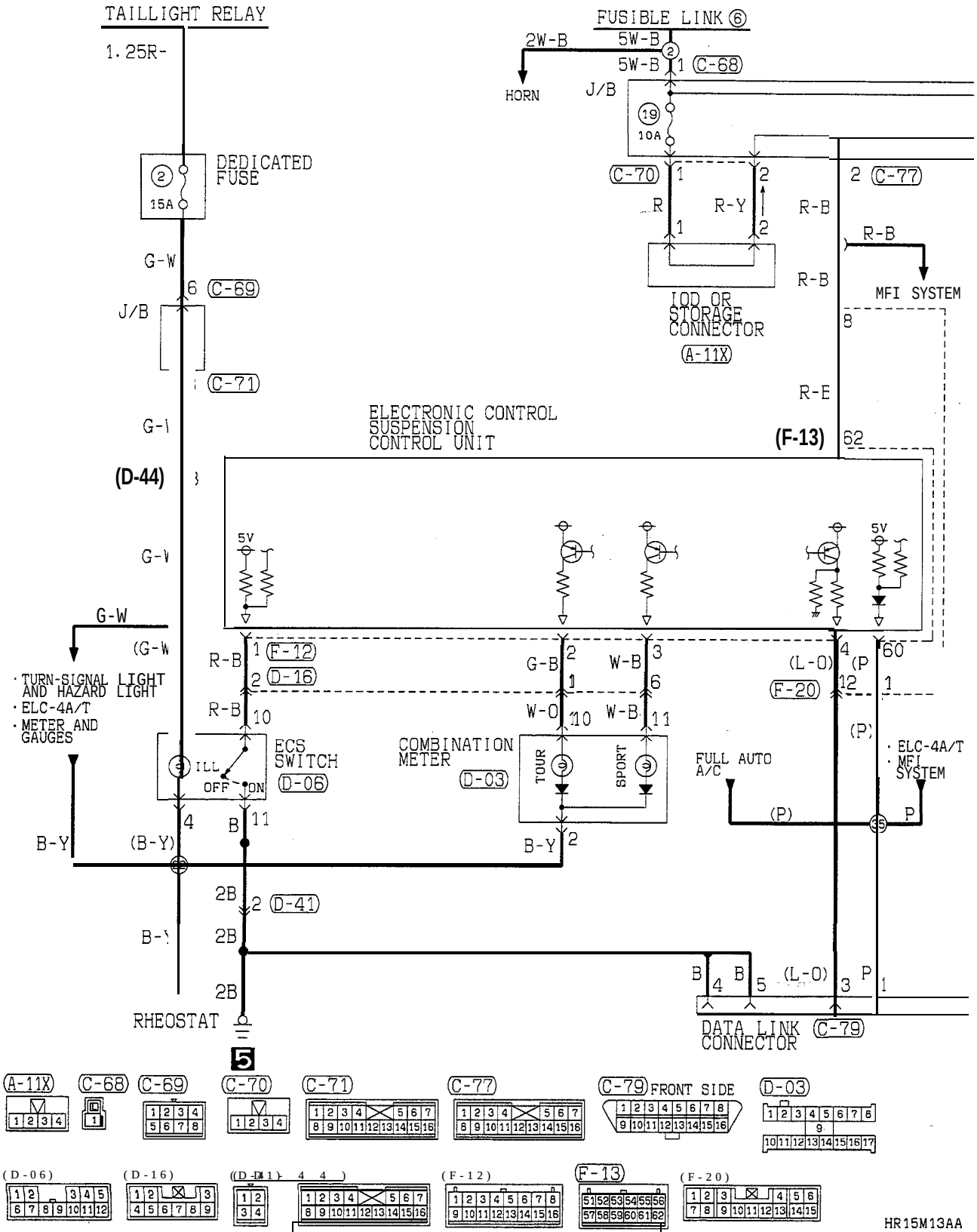

TSB Revision

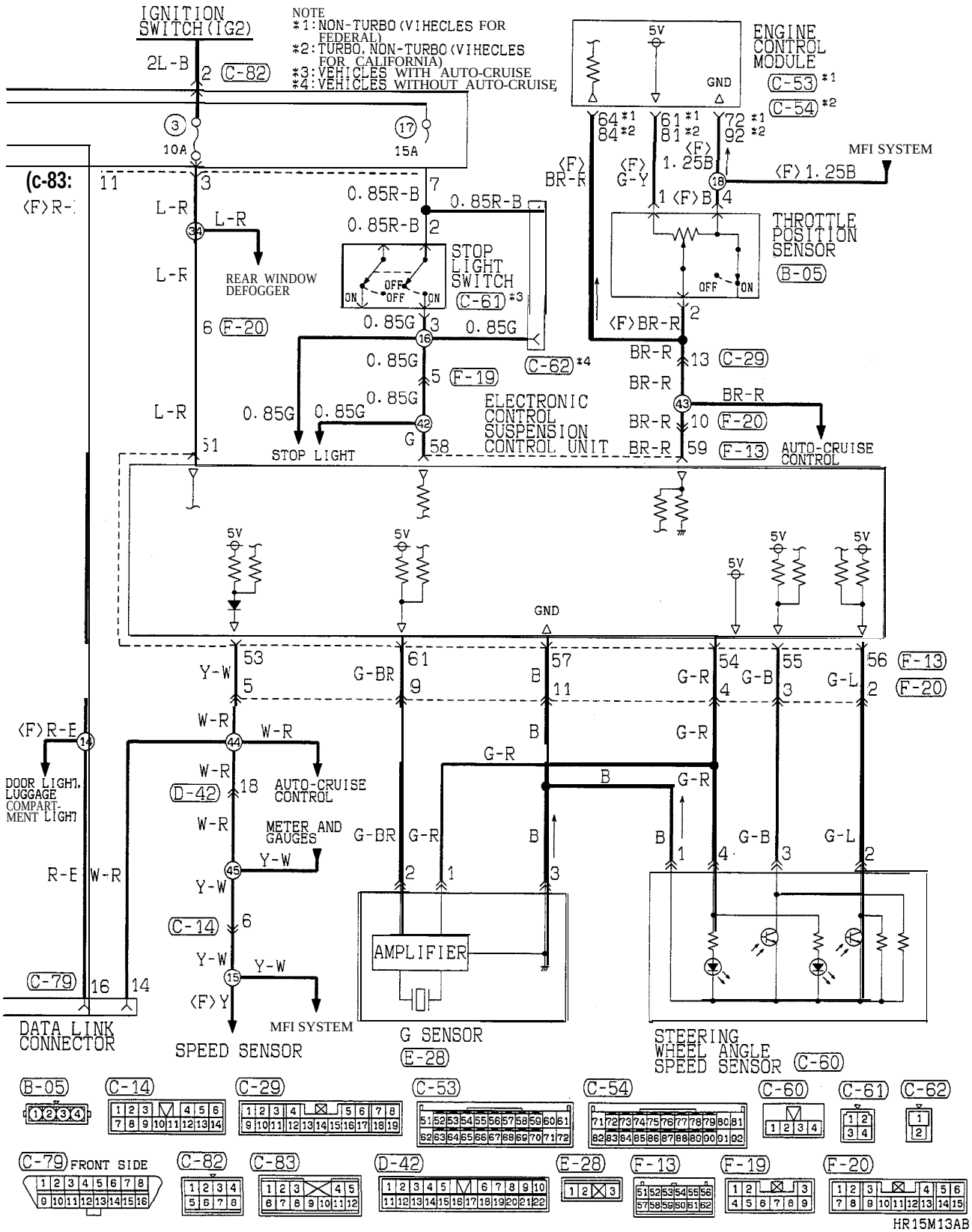
IGNITION SWITCH (IG2)
NOTE
*1: NON-TURBO (VIHECLES FOR FEDERAL)
*2: TURBO, NON-TURBO (VIHECLES FOR CALIFORNIA)
*3: VEHICLES WITH AUTO-CRUISE
*4: VEHICLES WITHOUT AUTO-CRUISE
ENGINE CONTROL MODULE
MFI SYSTEM
THROTTLE POSITION SENSOR
STOP LIGHT SWITCH
REAR WINDOW DEFOGGER
STOP LIGHT
ELECTRONIC CONTROL SUSPENSION CONTROL UNIT
AUTO-CRUISE CONTROL
DOOR LIGHT, LUGGAGE COMPARTMENT LIGHT
METER AND GAUGES
AMPLIFIER
DATA LINK CONNECTOR
SPEED SENSOR
G SENSOR
STEERING WHEEL ANGLE SPEED SENSOR
FRONT SIDE
HR15M13AB

ELECTRONIC CONTROL SUSPENSION (ECS) CIRCUIT (1995 MODELS) <HATCHBACK> (CONTINUED)

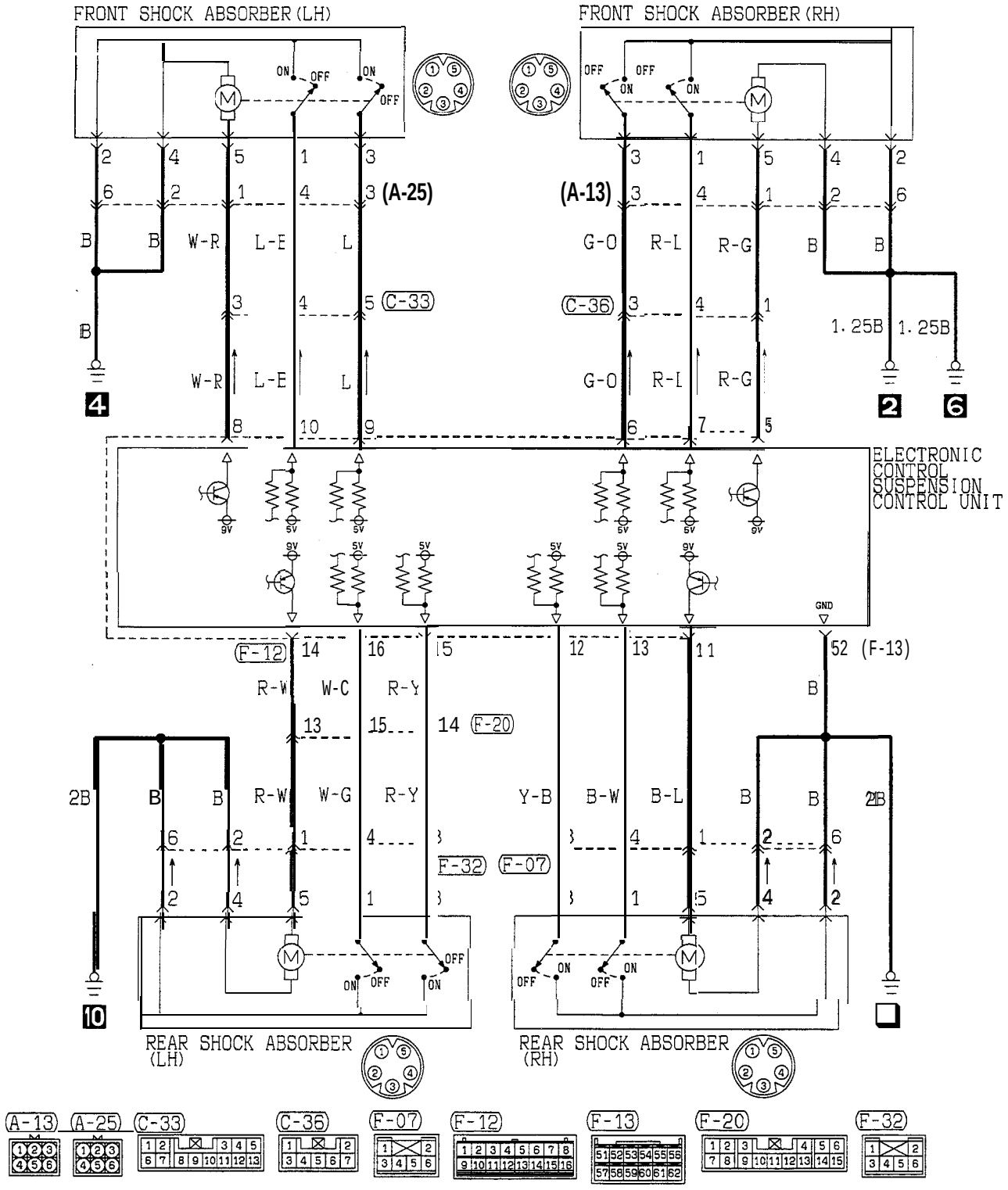

HR15M13BA

NOTES

ELECTRONIC CONTROL SUSPENSION (ECS) CIRCUIT (1995 MODELS)

<CONVERTIBLE>

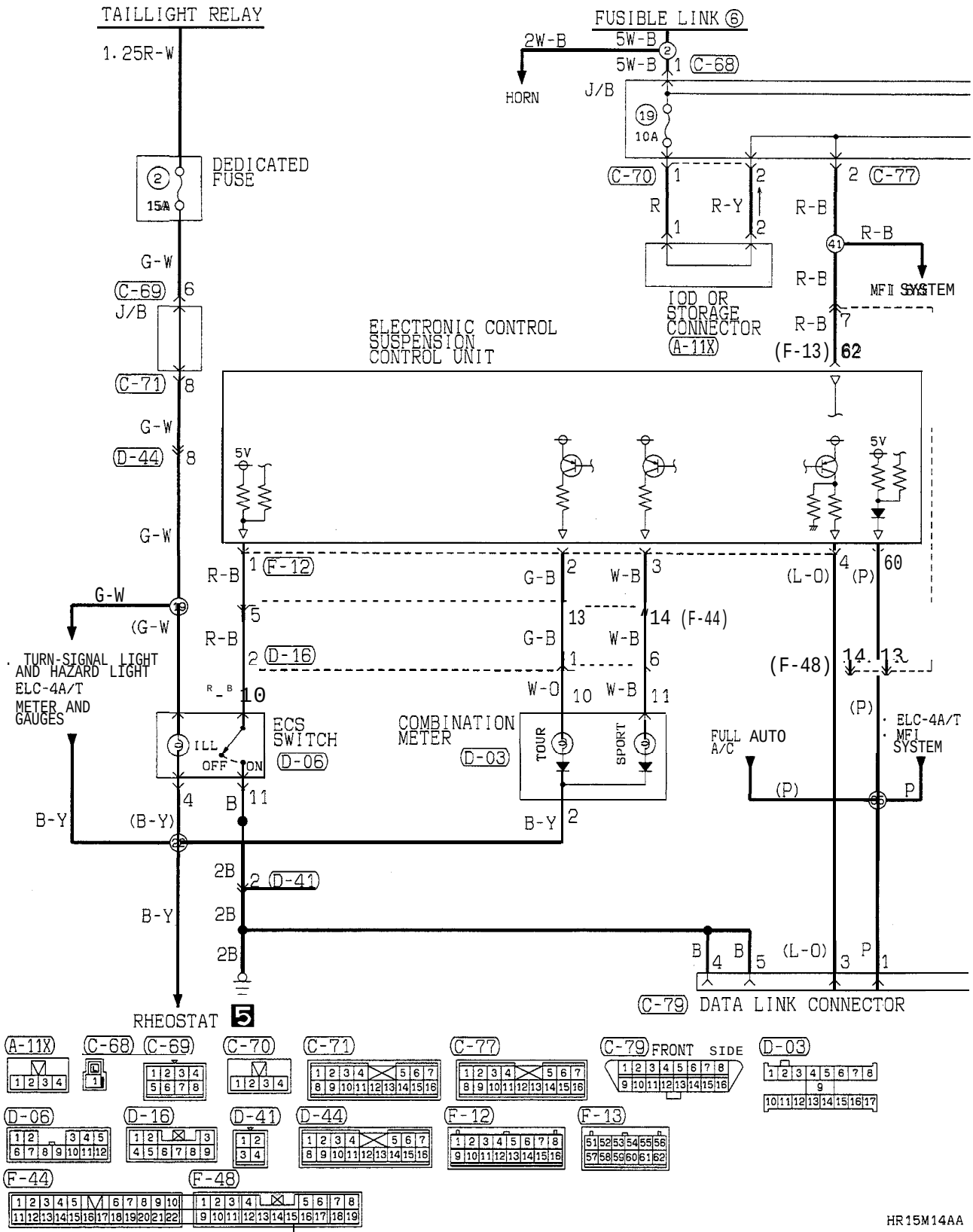

TSB Revision

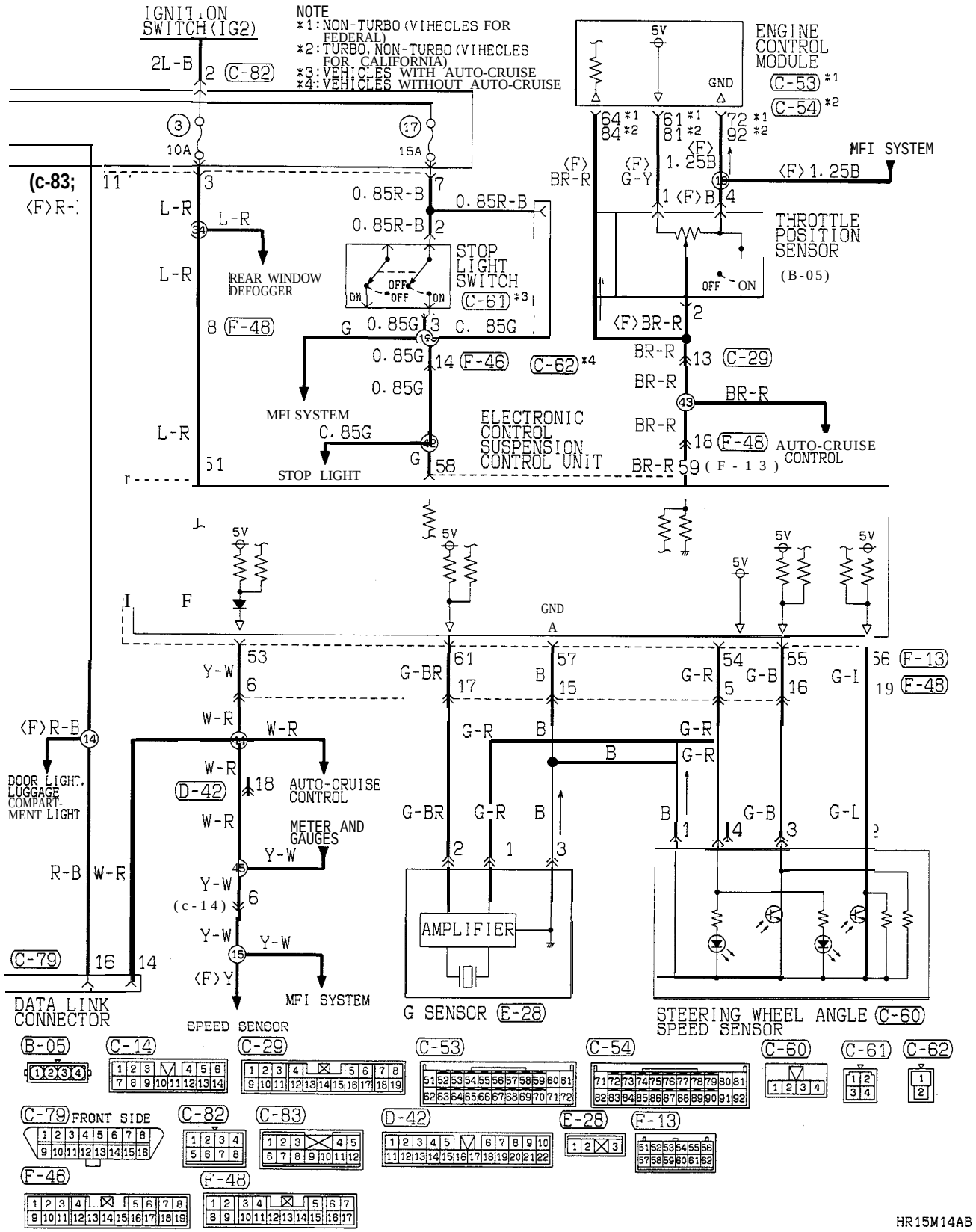
IGNITION SWITCH (IG2)
NOTE
*1: NON-TURBO (VIHECLES FOR FEDERAL)
*2: TURBO, NON-TURBO (VIHECLES FOR CALIFORNIA)
*3: VEHICLES WITH AUTO-CRUISE
*4: VEHICLES WITHOUT AUTO-CRUISE
ENGINE CONTROL MODULE
MFI SYSTEM
THROTTLE POSITION SENSOR
(B-05)
STOP LIGHT SWITCH
REAR WINDOW DEFOGGER
MFI SYSTEM
STOP LIGHT
ELECTRONIC CONTROL SUSPENSION CONTROL UNIT
AUTO-CRUISE CONTROL
DOOR LIGHT, LUGGAGE COMPARTMENT LIGHT
METER AND GAUGES
AMPLIFIER
DATA LINK CONNECTOR
SPEED SENSOR
G SENSOR
STEERING WHEEL ANGLE SPEED SENSOR
FRONT SIDE
HR15M14AB

ELECTRONIC CONTROL SUSPENSION (ECS) CIRCUIT (1995 MODELS) <CONVERTIBLE> (CONTINUED)

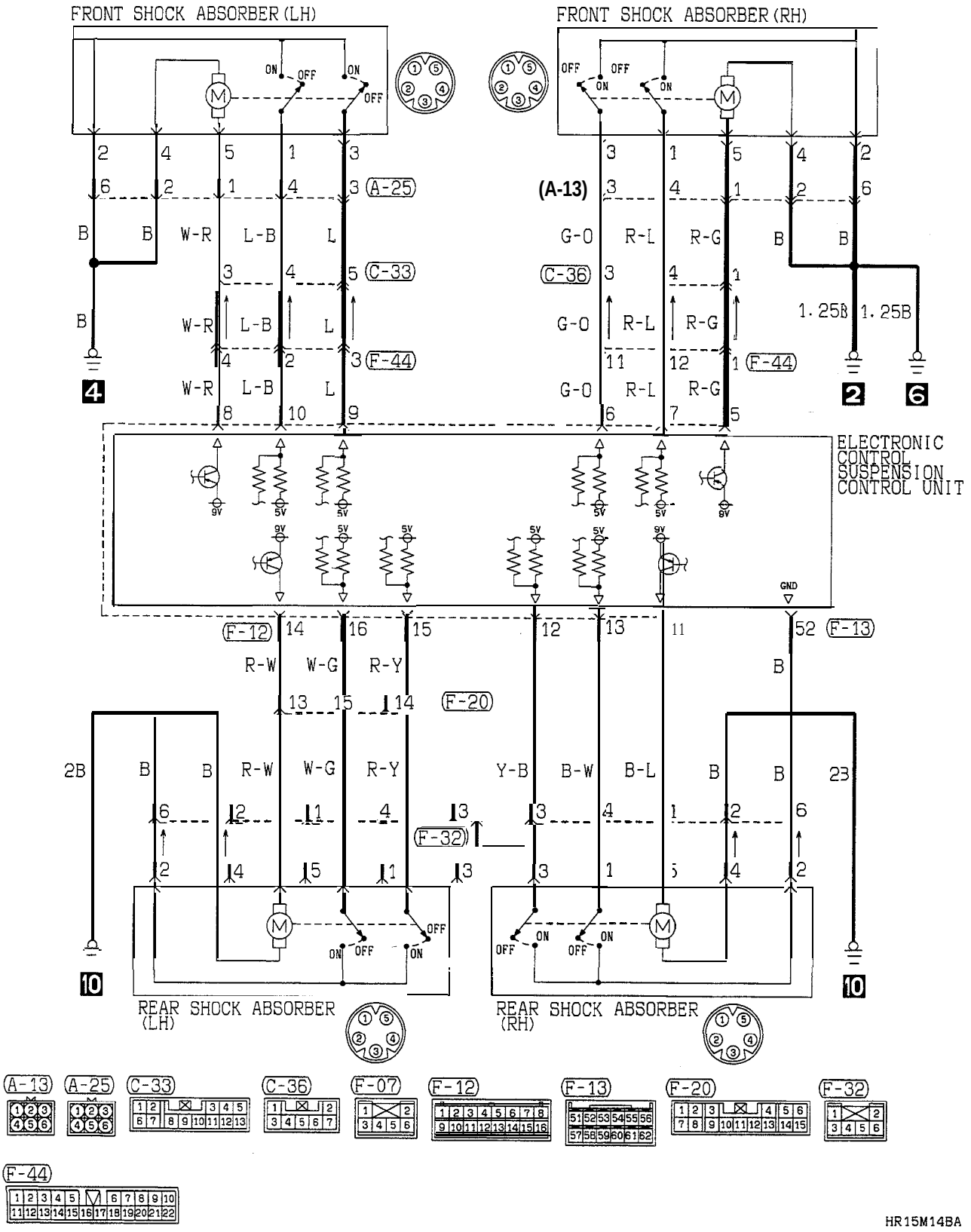

TSB Revision

COMPONENT LOCATION

Name	Symbol	Name	Symbol
Data link connector (from 1994 models)	D	G sensor	E
Data link connector (up to 1993 models)	F	Steering wheel angle speed sensor	B
ECS control unit	G	Throttle position sensor	A
Engine control module	C		

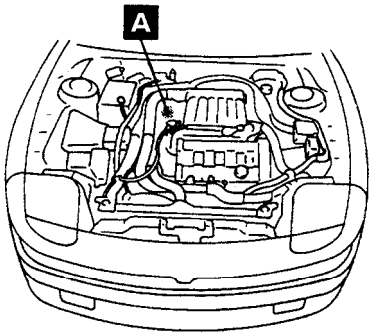

Q16F0257

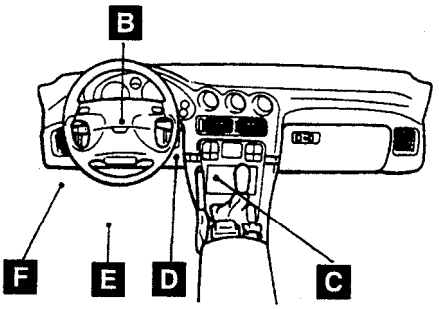

K19F0134

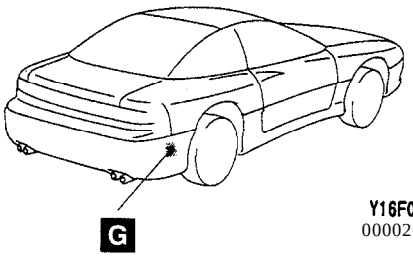

Y16F0267
00002609

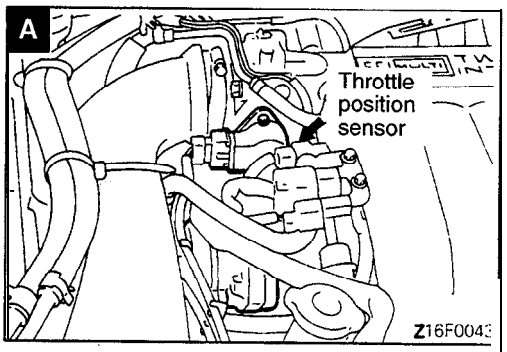

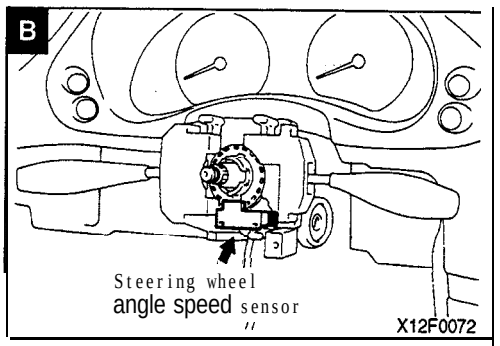

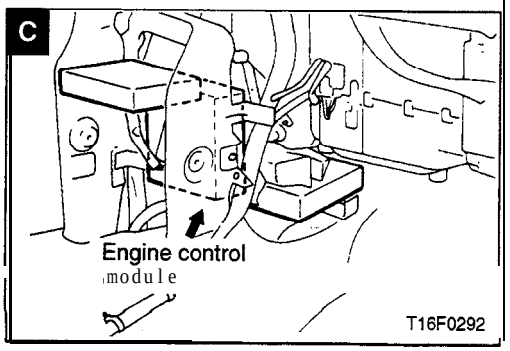

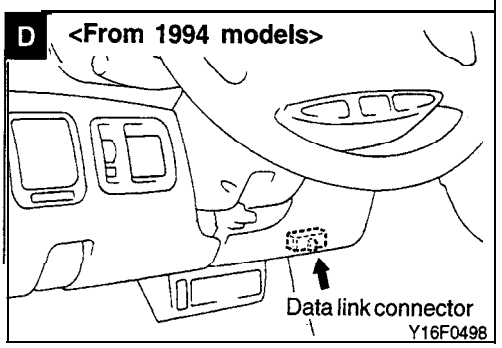

TSB Revision

E

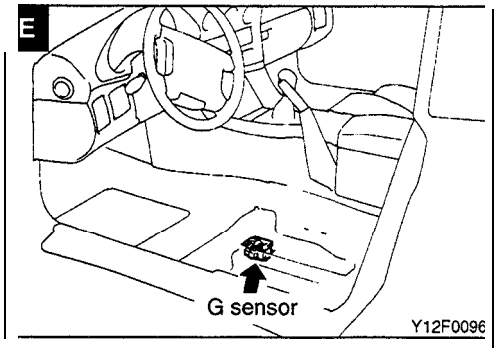
G sensor
Y12F0096

F

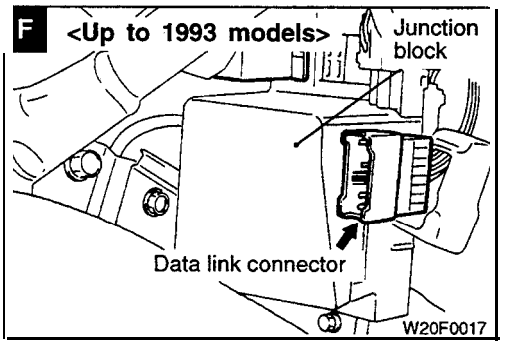
<Up to 1993 models>
Junction block
Data link connector
W20F0017

G

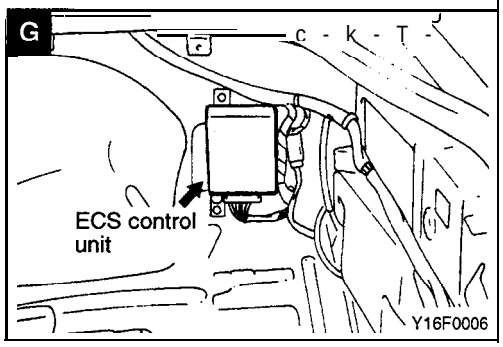
ECS control unit
Y16F0006

ACTIVE EXHAUST SYSTEM

COMPONENT LOCATION

Name	Symbol	Name	Symbol
Active exhaust control unit	C	Engine control module	B
Actuator assembly	D	Power window relay	A

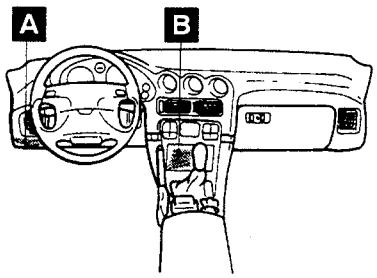

I19F0134

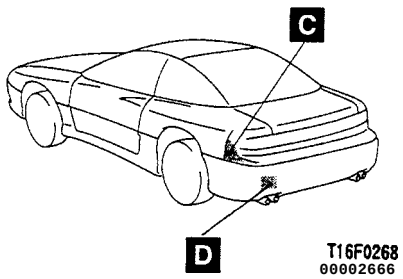

T16F0268
00002666

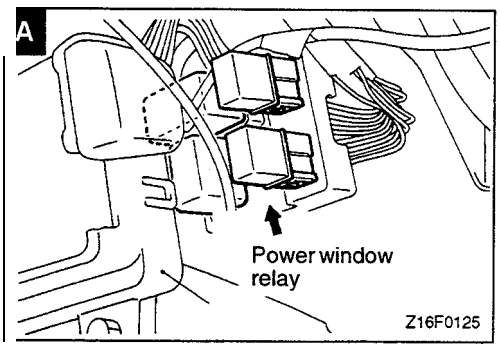

Z16F0125

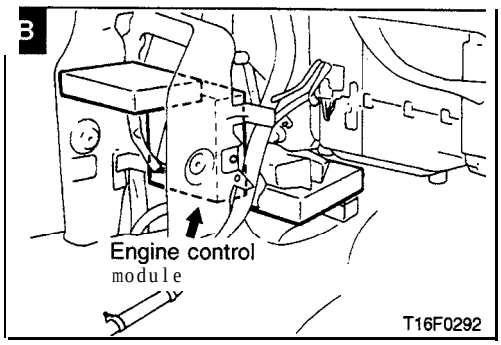

T16F0292

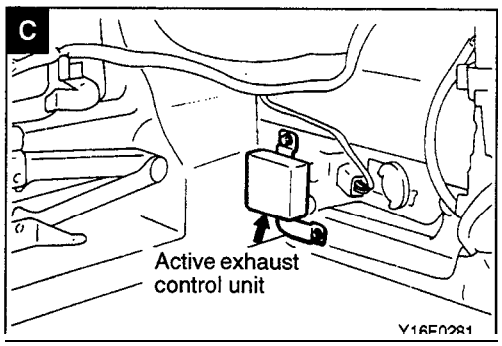

Y16F0281

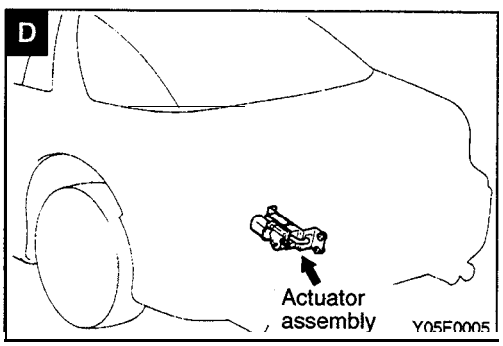

Y05F0005

ACTIVE EXHAUST SYSTEM CIRCUIT (UP TO 1993 MODELS)

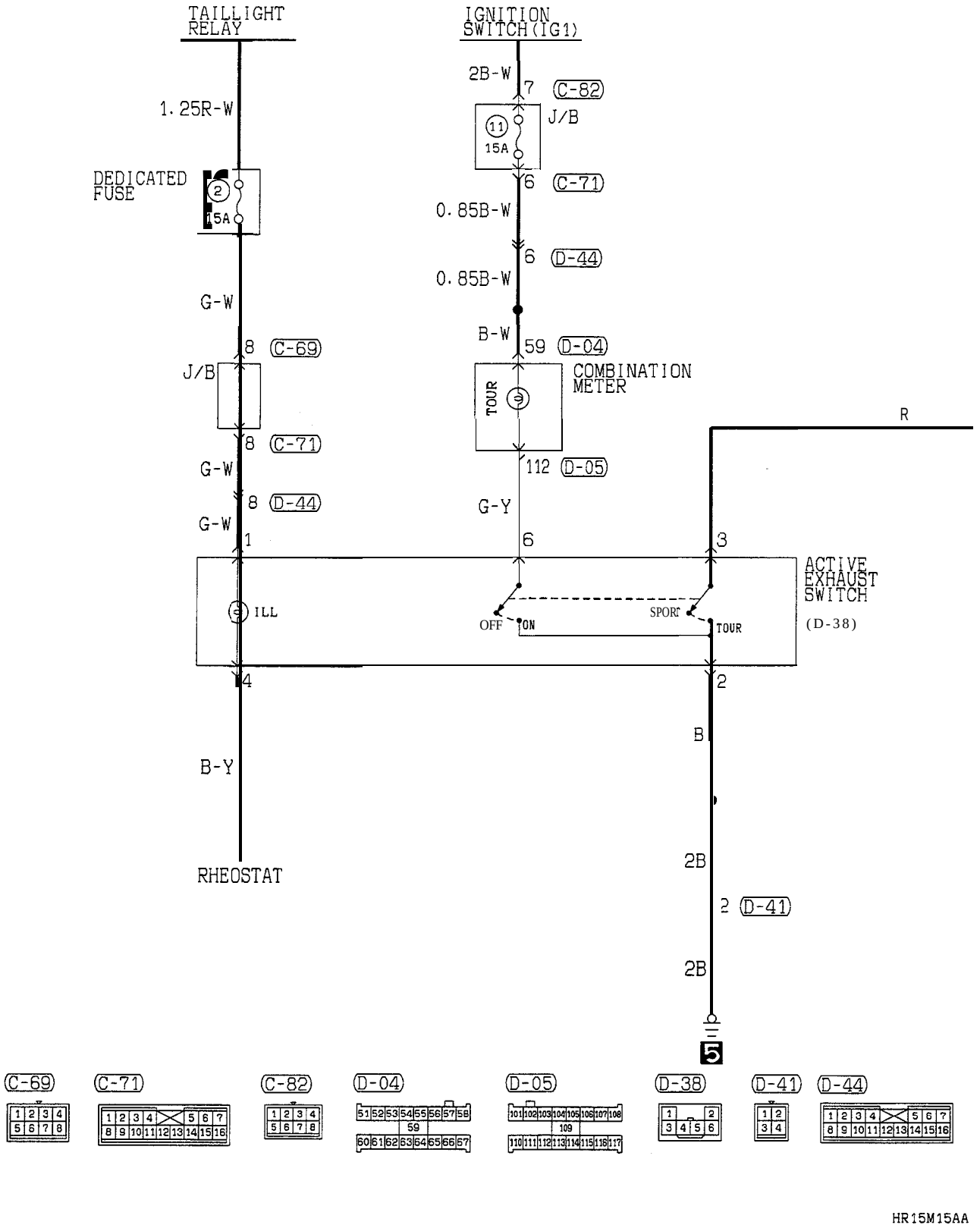

TSB Revision

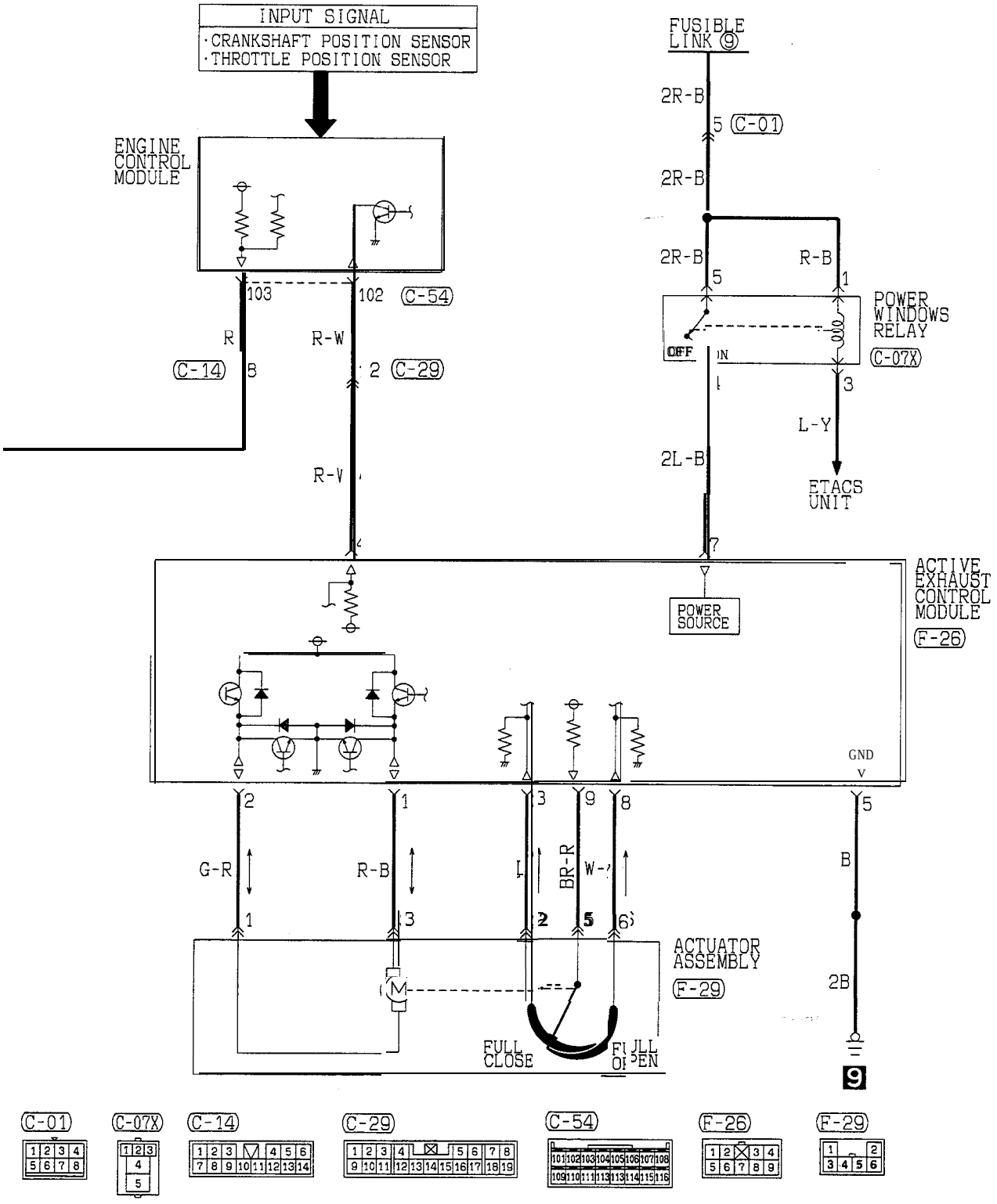

HR15M15AB

TSB Revision

ACTIVE EXHAUST SYSTEM CIRCUIT (1994 MODELS)

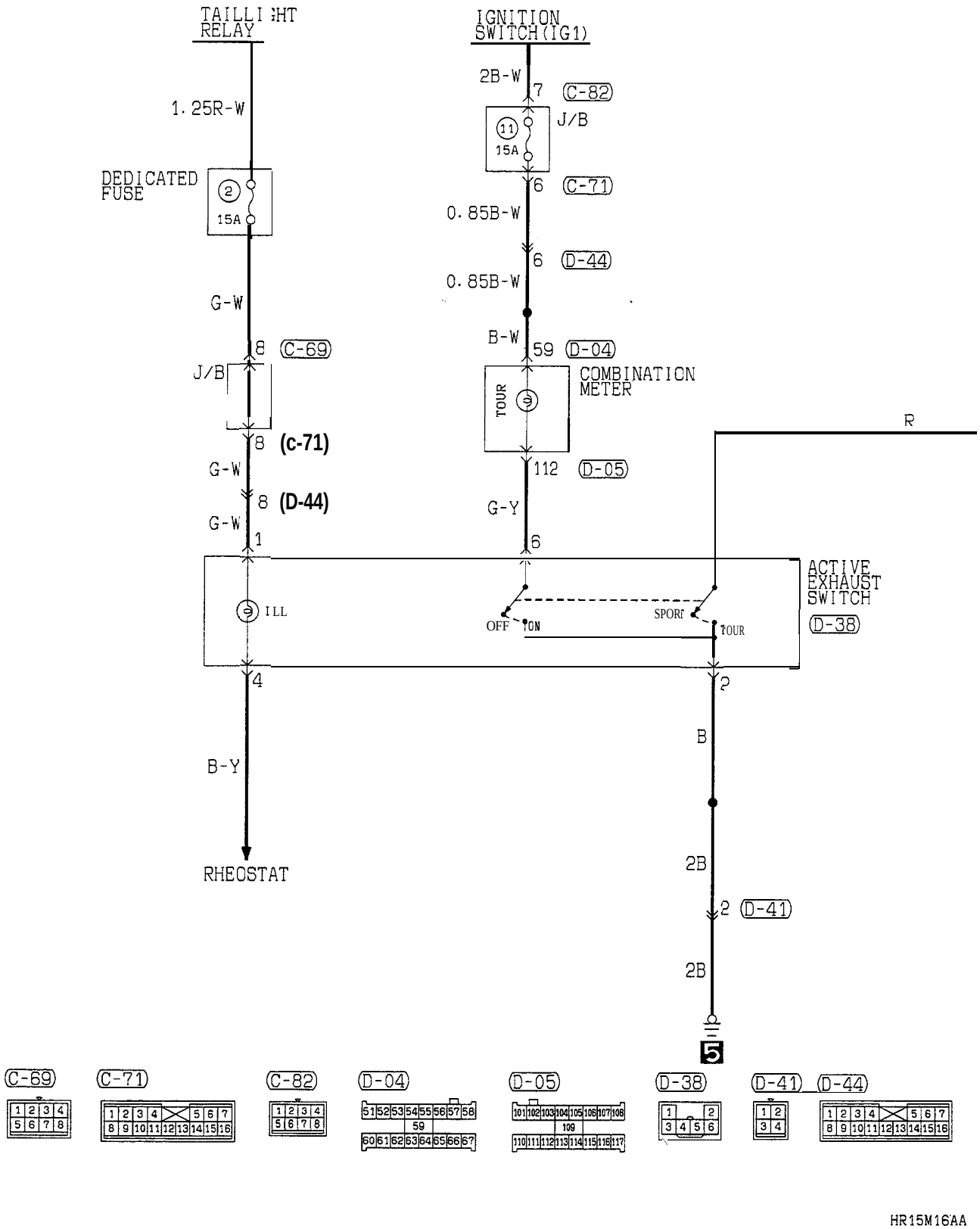

HR15M16AA

TSB Revision

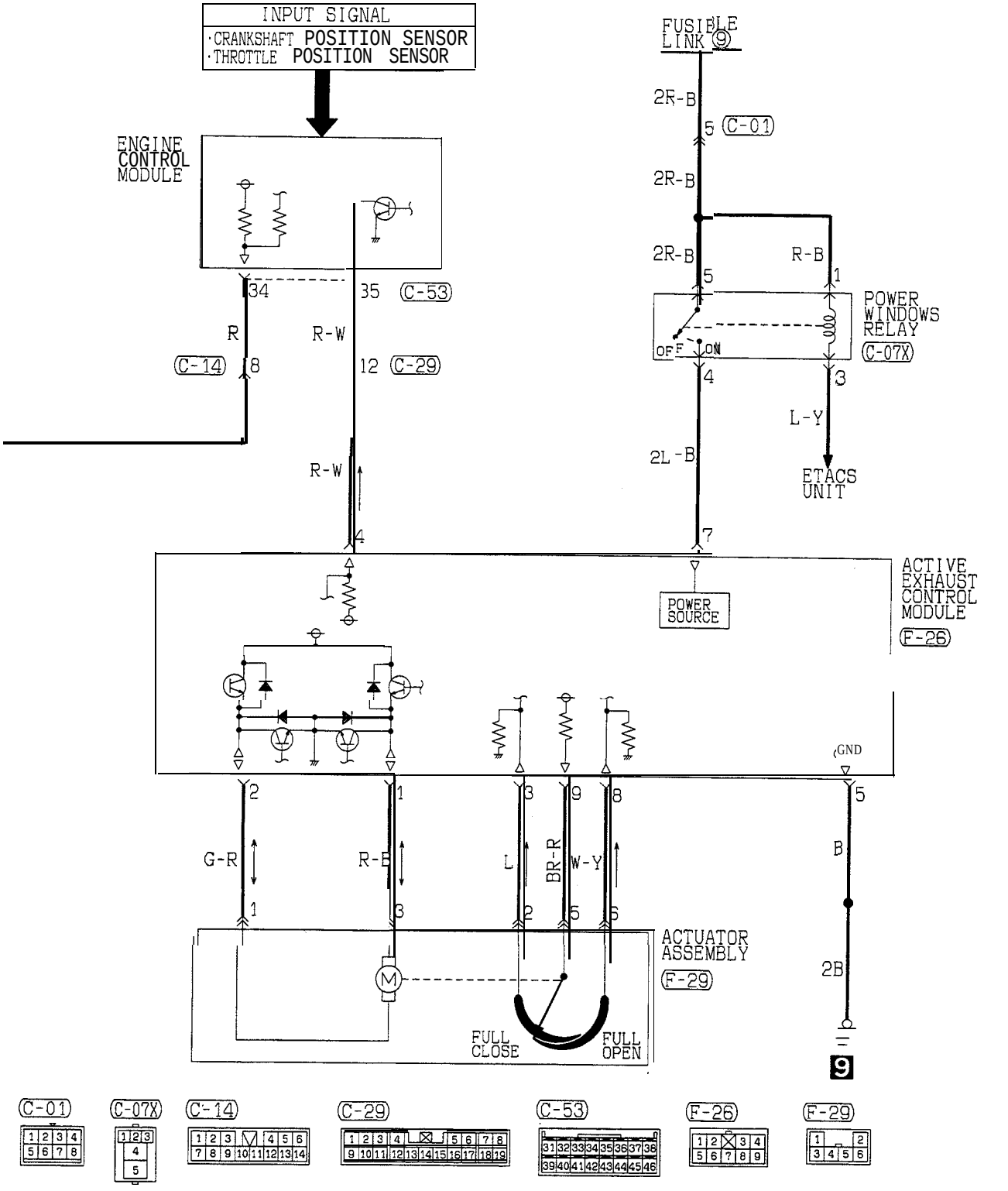

HR15M16AB

TSB Revision

SUPPLEMENTAL RESTRAINT SYSTEM (SRS) CIRCUIT (UP TO 1993 MODEL)

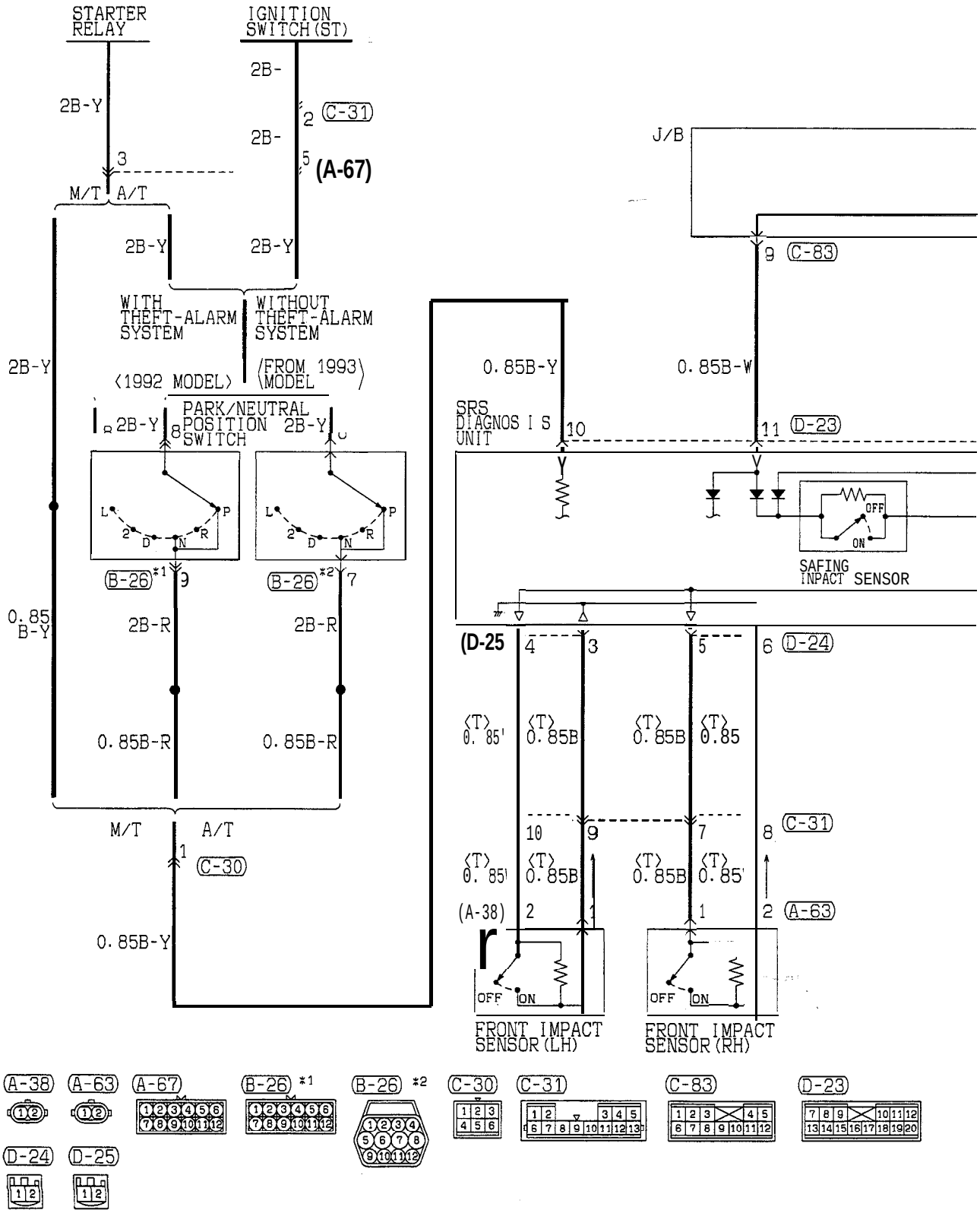

HR15M17AA

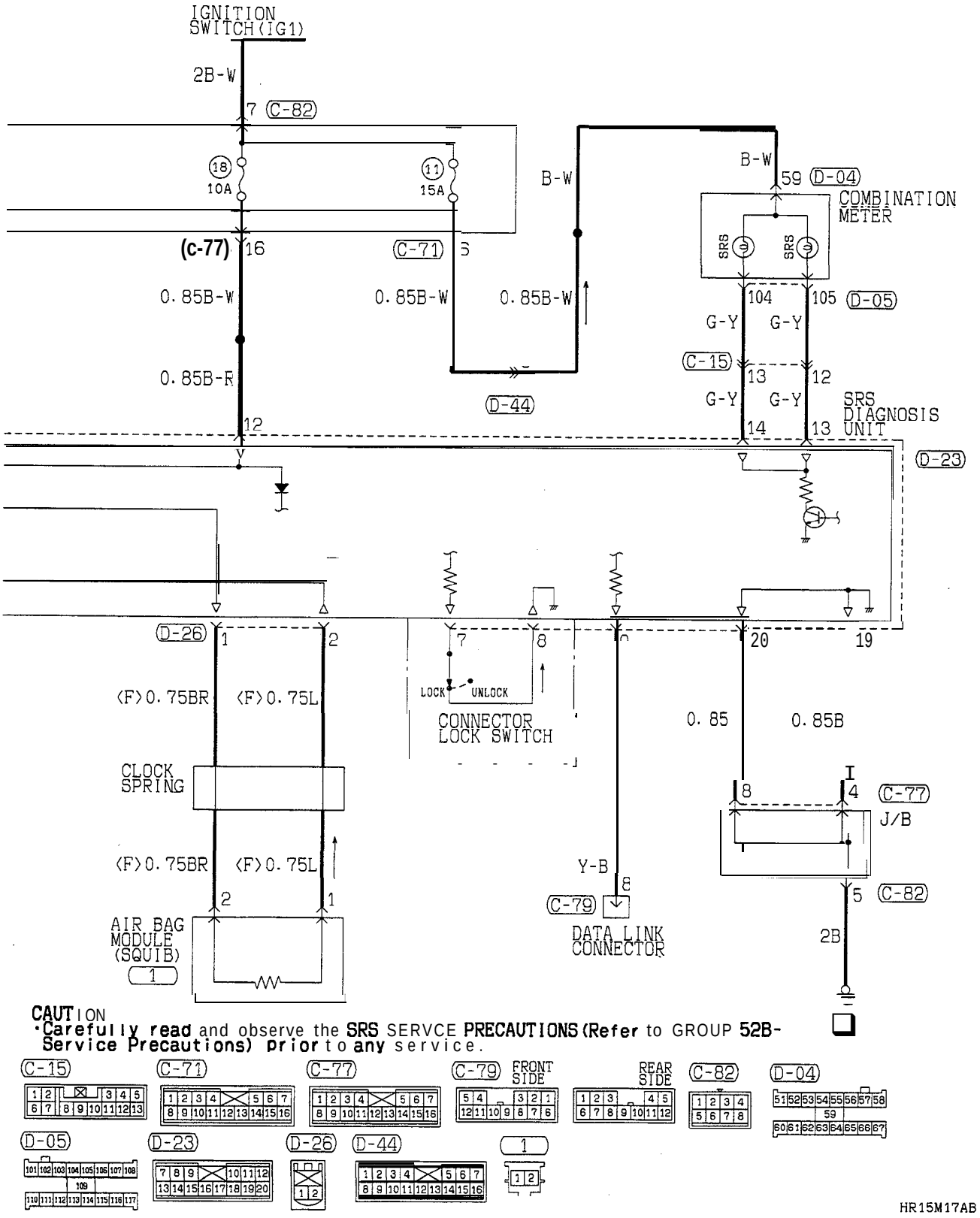

CAUTION

- **Carefully read** and observe the **SRS** SERVCE **PRECAUTIONS (Refer** to GROUP **52B-Service Precautions) prior** to **any** service.

TSB Revision

SUPPLEMENTAL RESTRAINT SYSTEM (SRS) CIRCUIT (FROM 1994 MODELS)

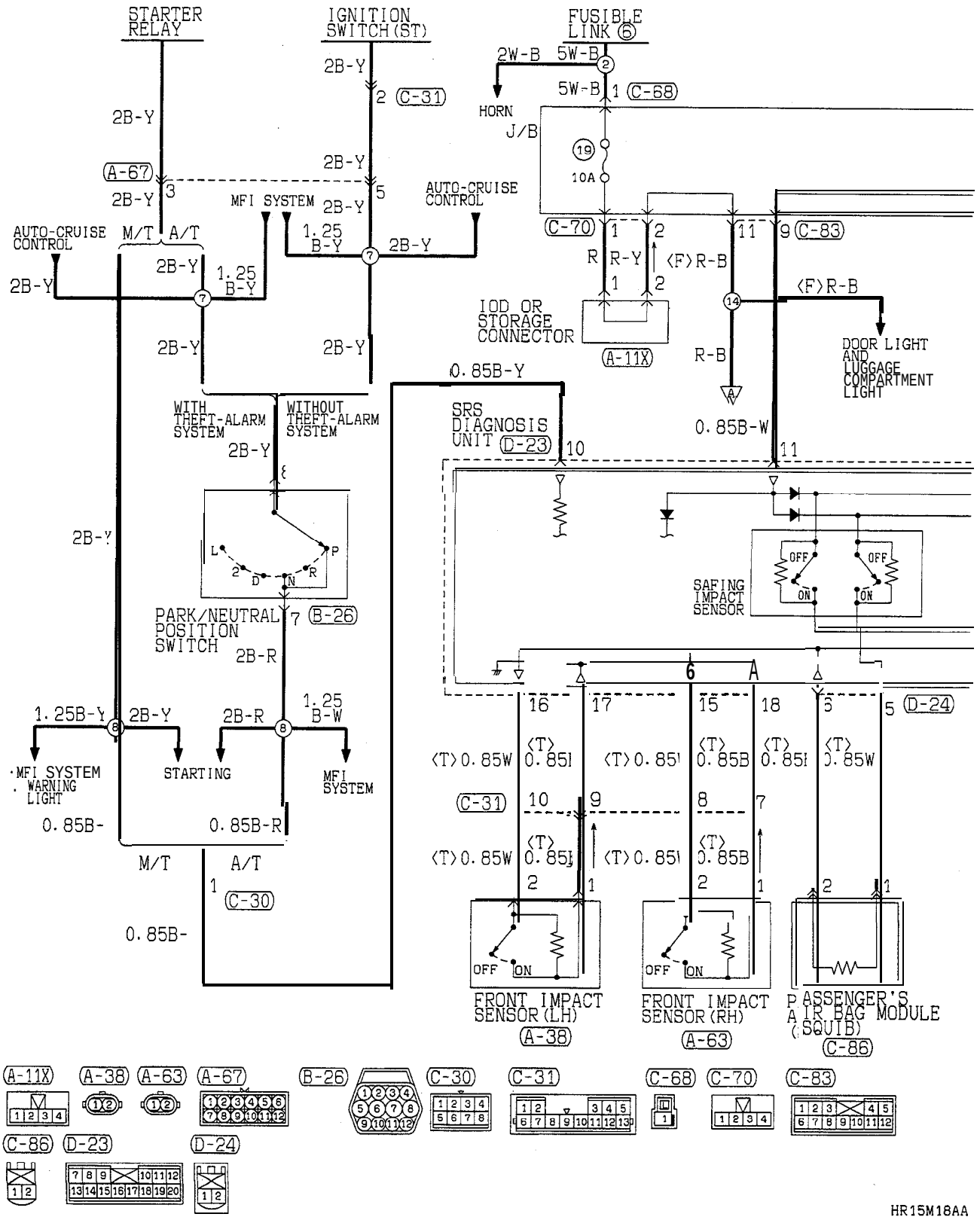

TSB Revision

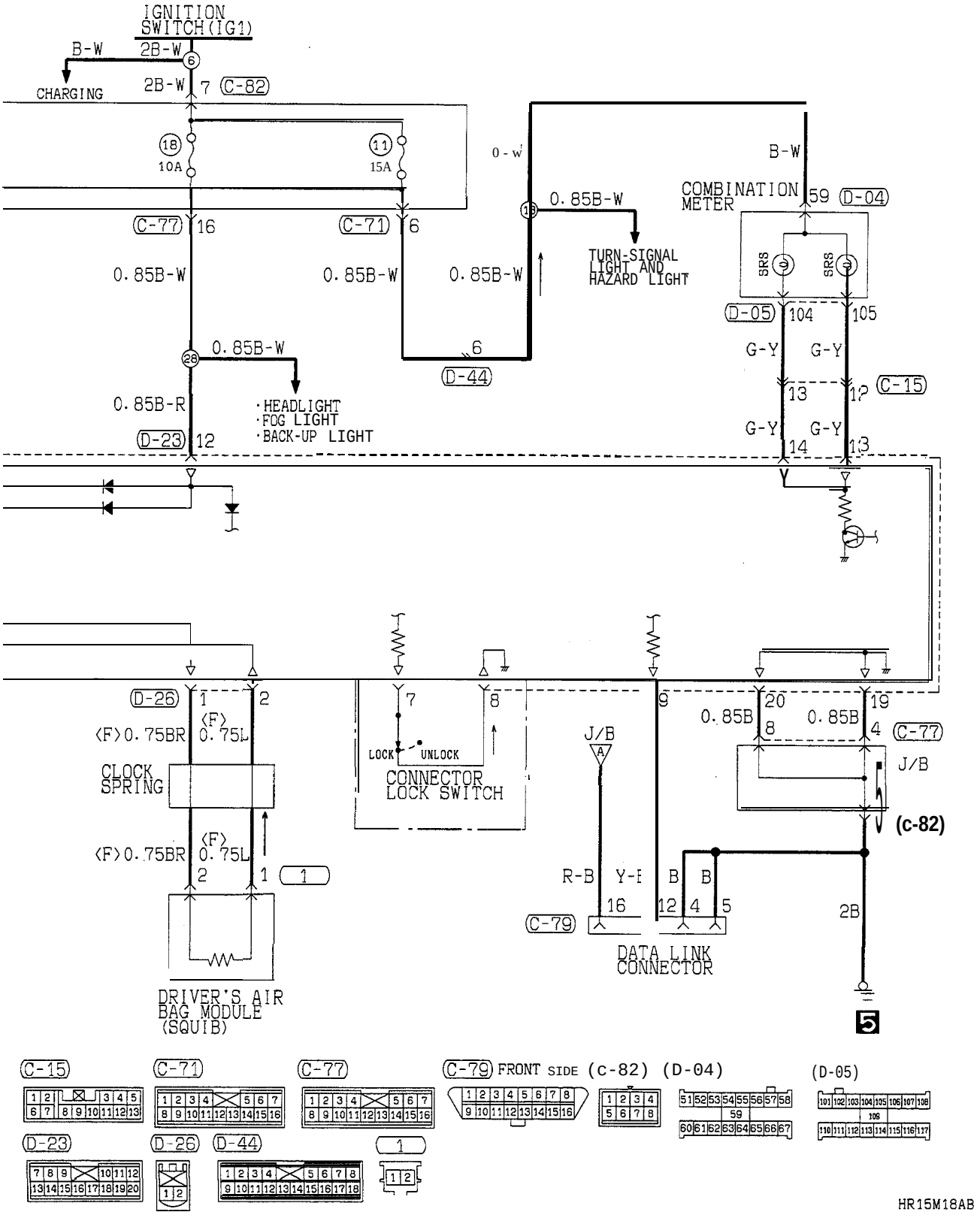

TSB Revision

COMPONENT LOCATION

Name	Symbol	Name	Symbol
Data link connector (from 1994 models)	D	Front impact sensor	A
Data link connector (up to 1993 models)	C	SRS diagnosis unit	B

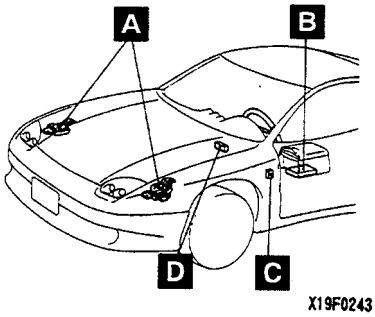

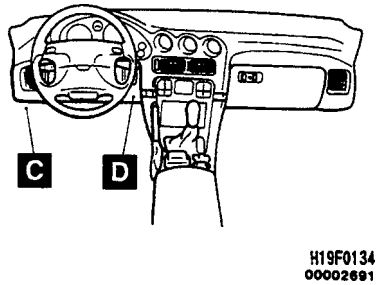

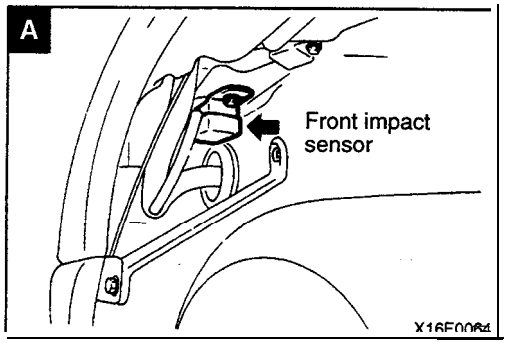

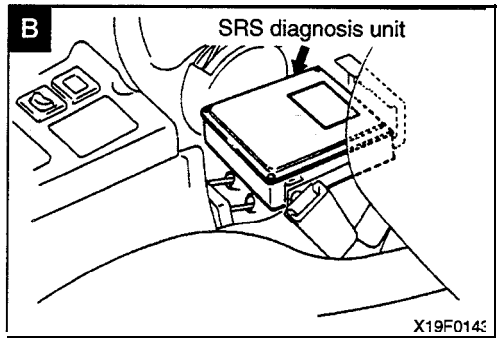

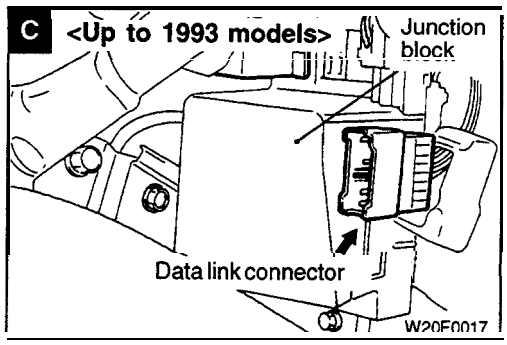

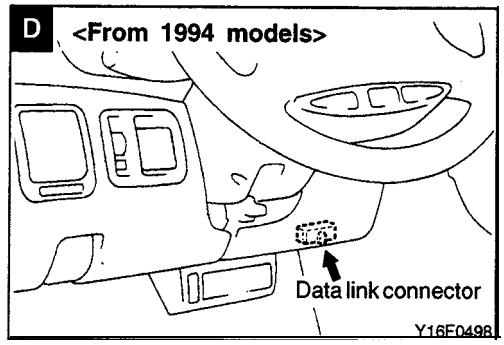

AUTO-CRUISE CONTROL

COMPONENT LOCATION

Name	Symbol	Name	Symbol
Auto-cruise control unit	B	Data link connector (up to 1993 models)	D
Auto-cruise relay	C	Engine control module	C
Data link connector (from 1994 models)	E	Throttle position sensor	A

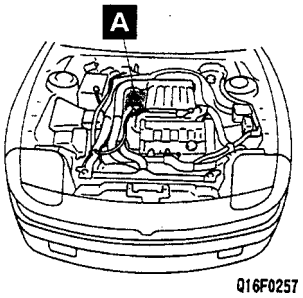

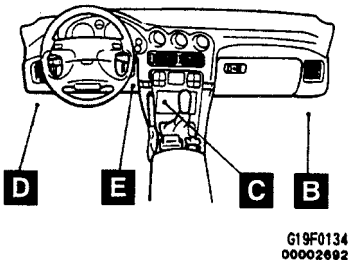

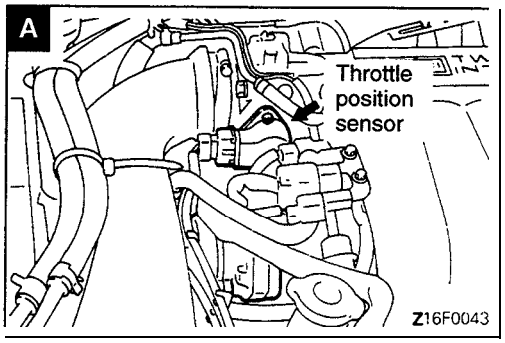

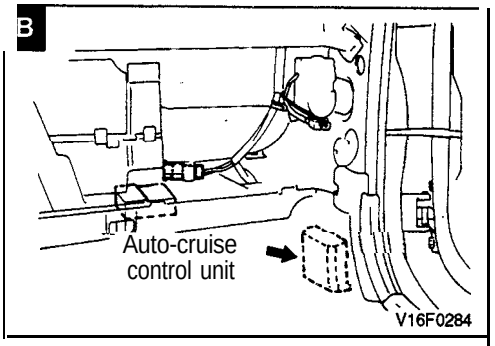

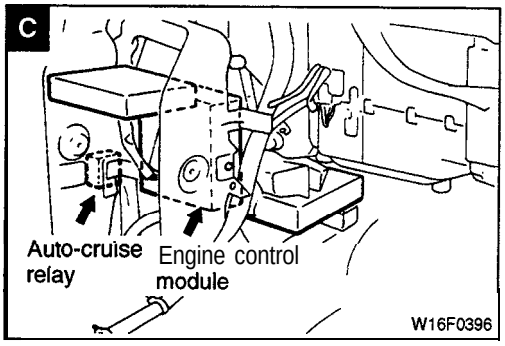

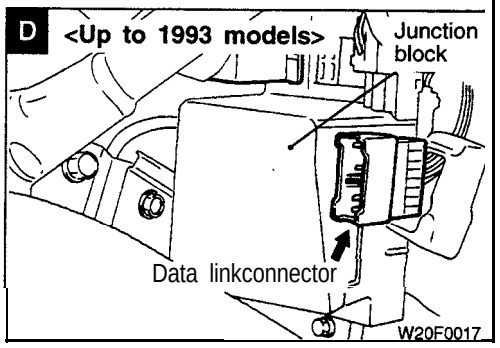

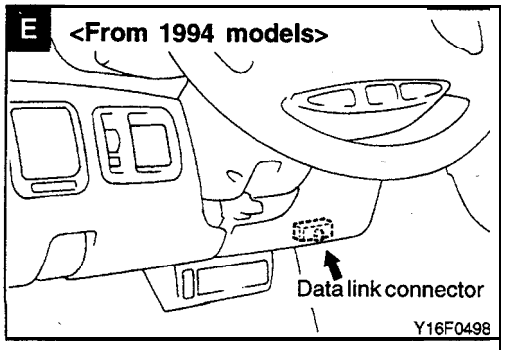

AUTO-CRUISE CONTROL CIRCUIT (UP TO 1993 MODELS)

<M/T>

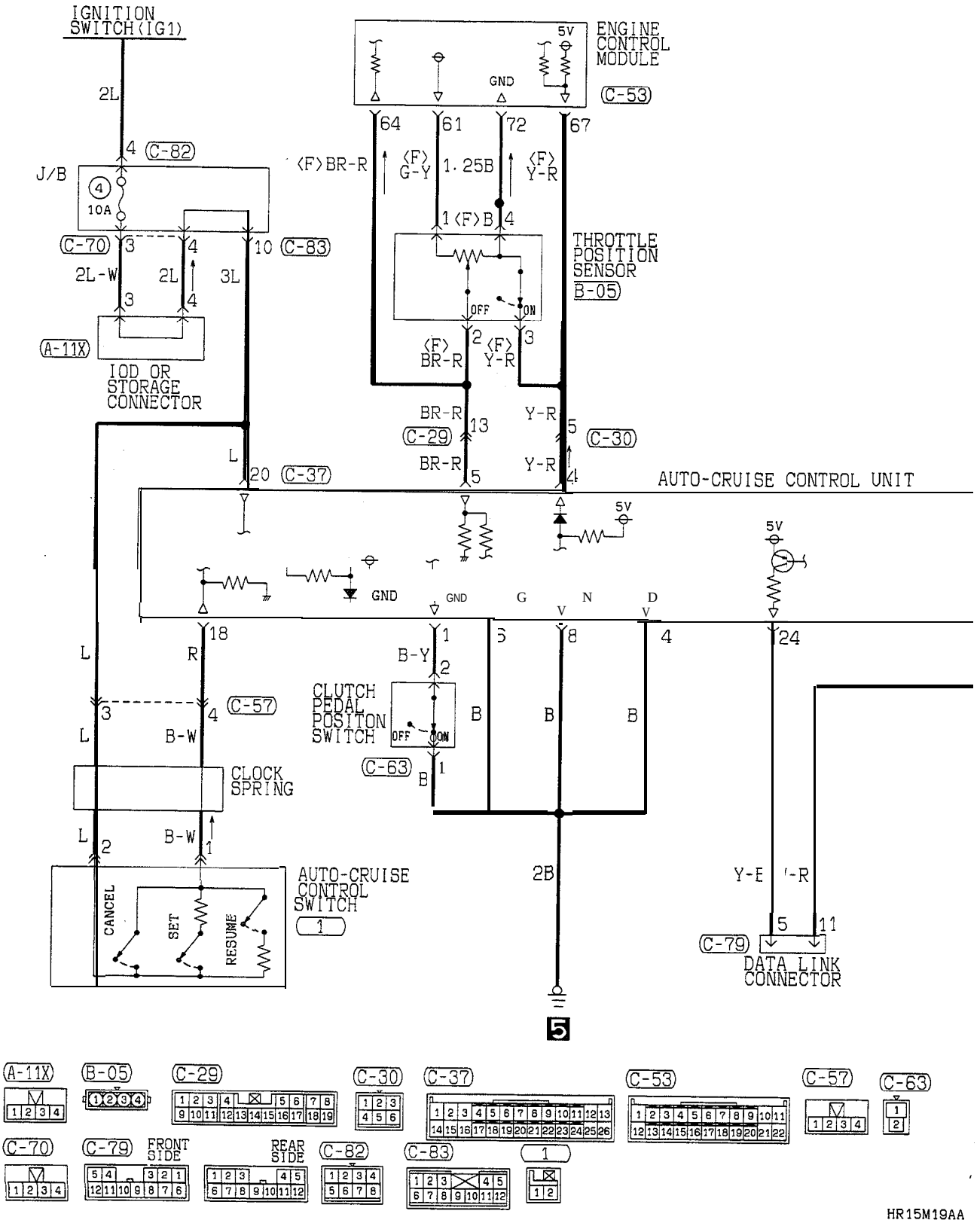

TSB Revision

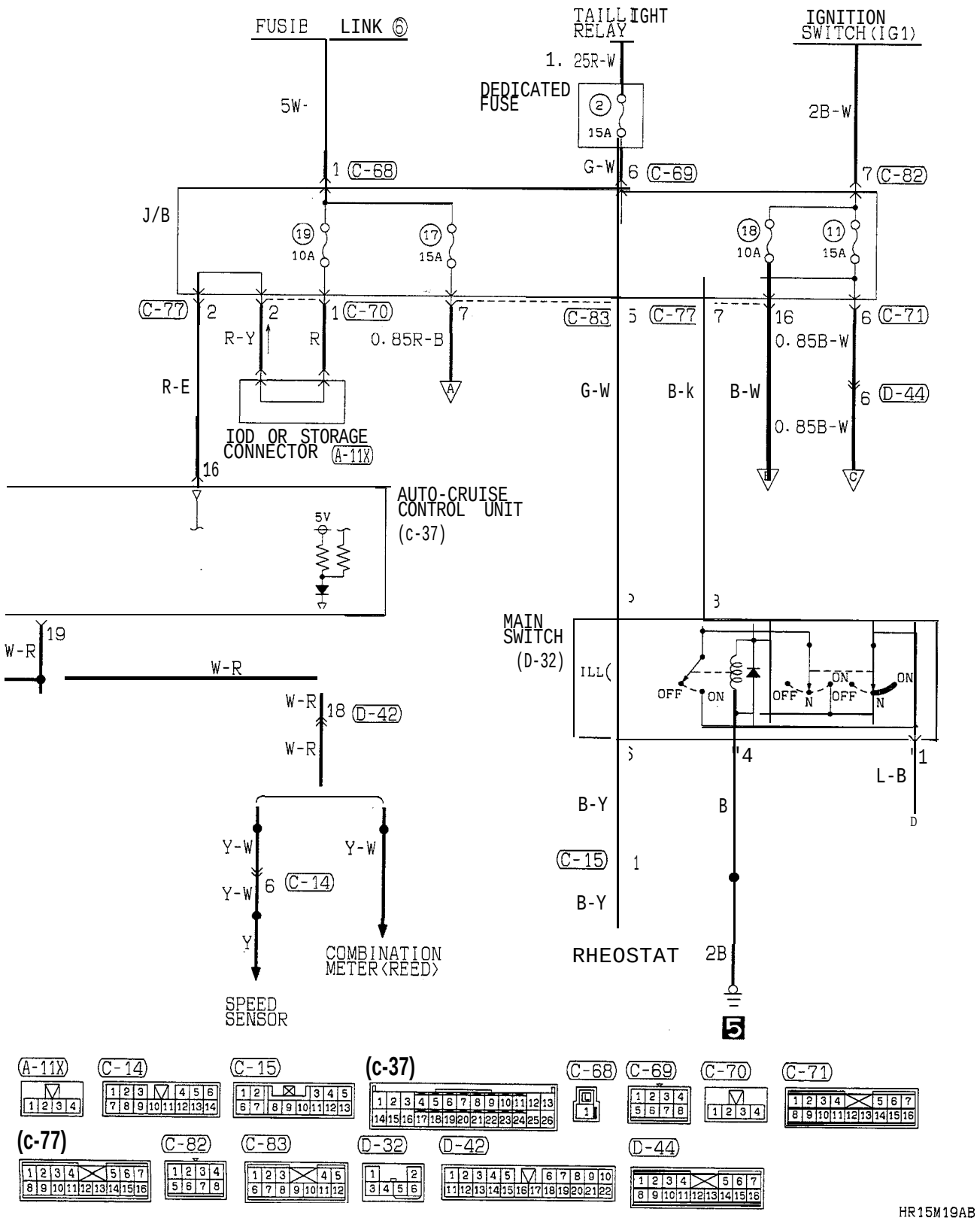
FUSIB LINK ⑥
TAILLIGHT RELAY
IGNITION SWITCH(IG1)
1. 25R-W
DEDICATED FUSE
15A
5W-
2B-W
G-W
1 (C-68)
6 (C-69)
7 (C-82)
J/B
10A
15A
10A
15A
(C-77) 2
2
1 (C-70)
7
(C-83) 5 (C-77) 7
16
6 (C-71)
R-Y
R
0.85R-B
0.85B-W
R-E
G-W
B-k
B-W
6 (D-44)
0.85B-W
IOD OR STORAGE CONNECTOR (A-11X)
16
AUTO-CRUISE CONTROL UNIT (c-37)
5V
MAIN SWITCH (D-32)
ILL(
OFF
ON
OFF
N
ON
OFF
N
ON
W-R
19
W-R
W-R
18 (D-42)
W-R
L-B
B-Y
B
Y-W
Y-W
Y-W
6 (C-14)
Y
(C-15) 1
B-Y
COMBINATION METER<REED>
RHEOSTAT
2B
SPEED SENSOR
5
(A-11X)
(C-14)
(C-15)
(c-37)
(C-68)
(C-69)
(C-70)
(C-71)
(c-77)
(C-82)
(C-83)
(D-32)
(D-42)
(D-44)
HR15M19AB

AUTO-CRUISE CONTROL CIRCUIT (UP TO 1993 MODELS) <M/T> (CONTINUED)

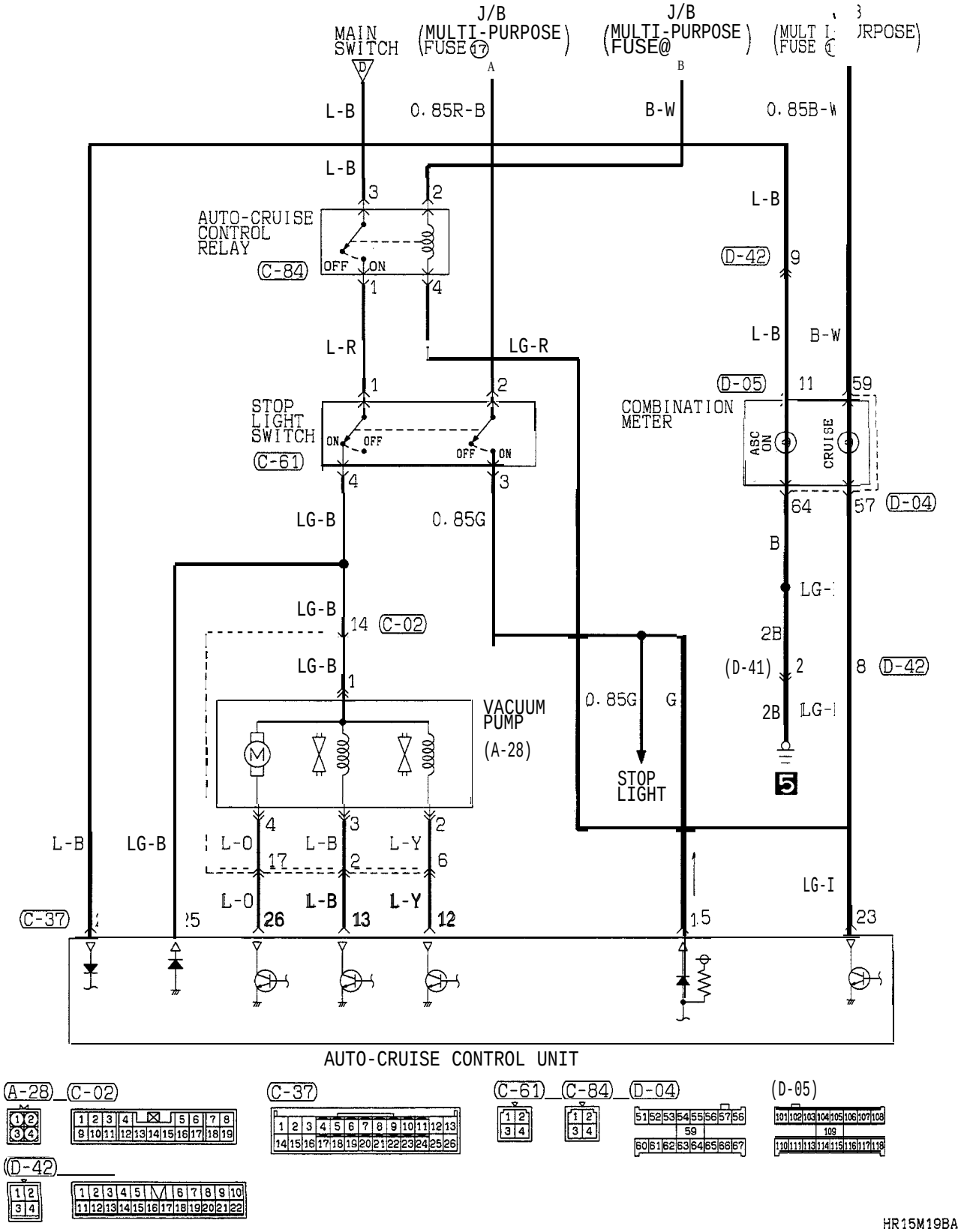

HR15M19BA

TSB Revision

NOTES

AUTO-CRUISE CONTROL CIRCUIT (1994, 1995 MODELS)

<M/T> NON TURBO (FEDERAL)

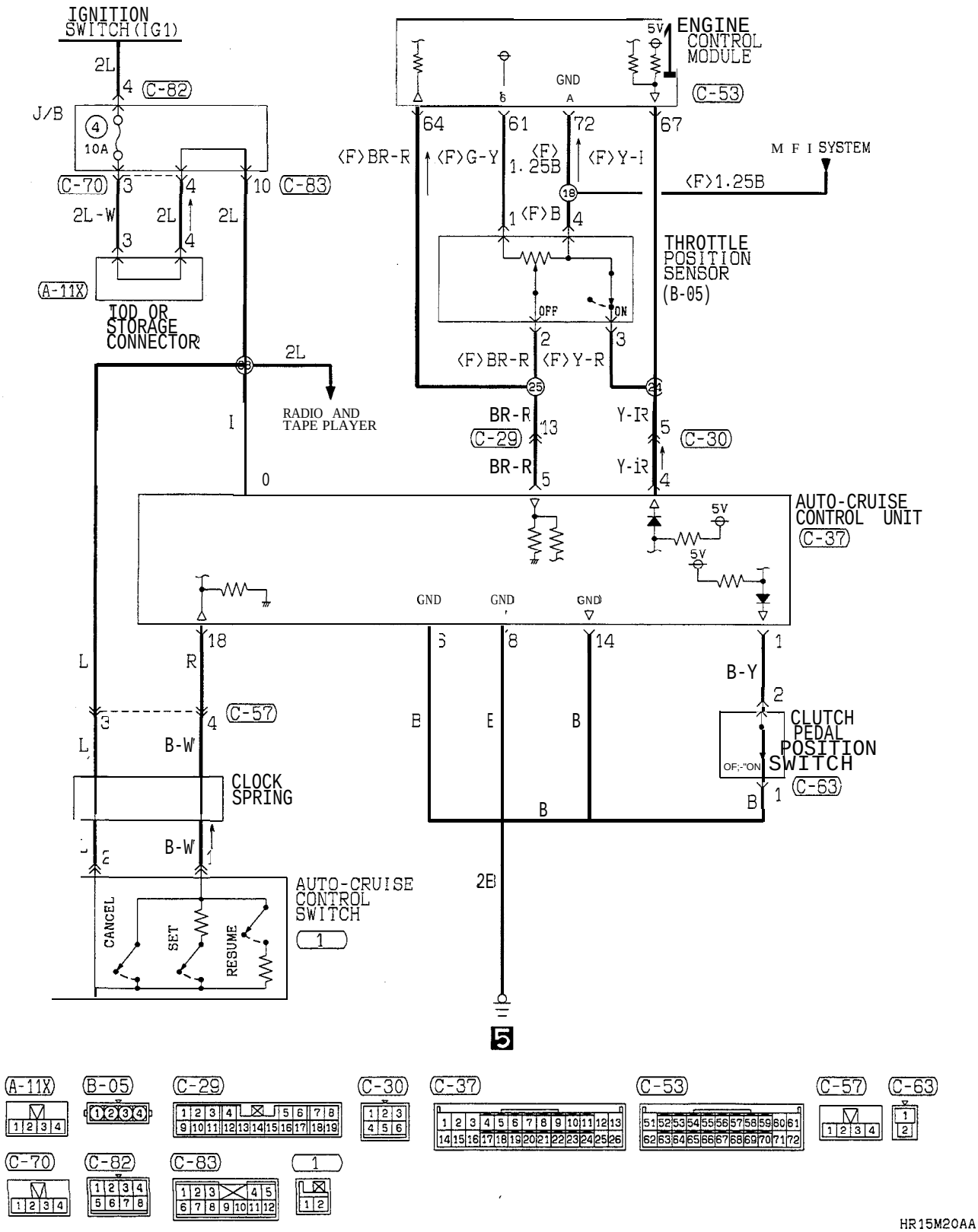

TSB Revision

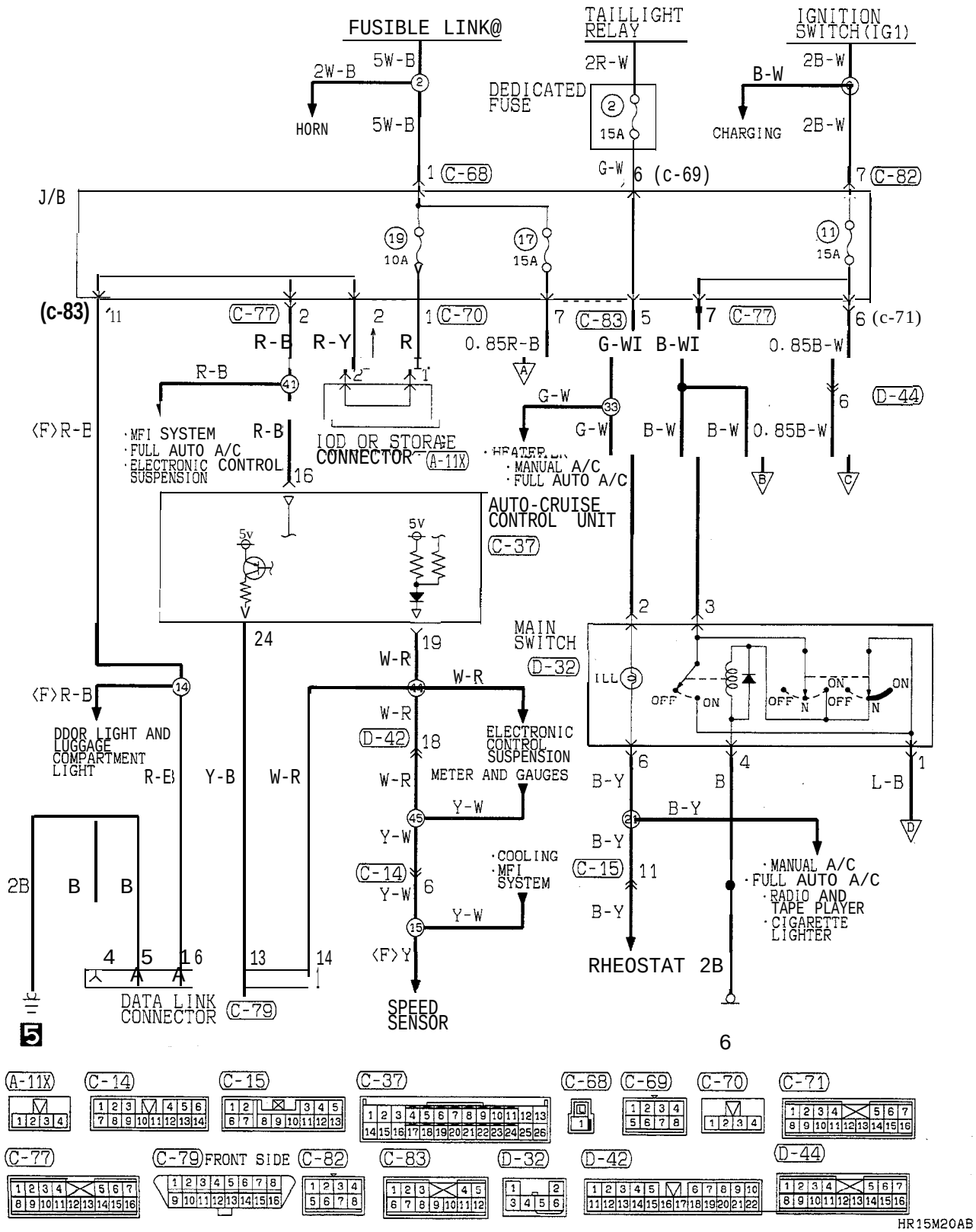
FUSIBLE LINK@
TAILLIGHT RELAY
IGNITION SWITCH(IG1)
5W-B
2W-B
HORN
2R-W
DEDICATED FUSE
15A
B-W
2B-W
CHARGING
G-W
6 (c-69)
1 (C-68)
7 (C-82)
J/B
19
10A
17
15A
11
15A
(c-83)
11
(C-77)
2
1 (C-70)
7 (C-83)
5
7 (C-77)
6 (c-71)
R-B
R-Y
R
0.85R-B
G-WI
B-WI
0.85B-W
R-B
41
G-W
33
6
(D-44)
(F)R-B
·MFI SYSTEM
·FULL AUTO A/C
·ELECTRONIC CONTROL SUSPENSION
R-B
16
IOD OR STORAGE CONNECTOR (A-11X)
·HEATER
·MANUAL A/C
·FULL AUTO A/C
B-W
0.85B-W
AUTO-CRUISE CONTROL UNIT
(C-37)
5V
24
19
W-R
MAIN SWITCH
(D-32)
ILL
OFF
ON
N
(F)R-B
14
DDOR LIGHT AND LUGGAGE COMPARTMENT LIGHT
R-B
Y-B
W-R
(D-42)
18
ELECTRONIC CONTROL SUSPENSION
METER AND GAUGES
Y-W
45
(C-14)
6
·COOLING
·MFI SYSTEM
15
(F)Y
SPEED SENSOR
B-Y
B
L-B
(C-15)
11
·MANUAL A/C
·FULL AUTO A/C
·RADIO AND TAPE PLAYER
·CIGARETTE LIGHTER
RHEOSTAT 2B
2B
B
4
5
16
13
14
DATA LINK CONNECTOR (C-79)
5
6
(A-11X)
(C-14)
(C-15)
(C-37)
(C-68)
(C-69)
(C-70)
(C-71)
(C-77)
(C-79) FRONT SIDE
(C-82)
(C-83)
(D-32)
(D-42)
(D-44)
HR15M20AB

AUTO-CRUISE CONTROL CIRCUIT (1994, 1995 MODELS) <M/T> NON TURBO (FEDERAL) (CONTINUED)

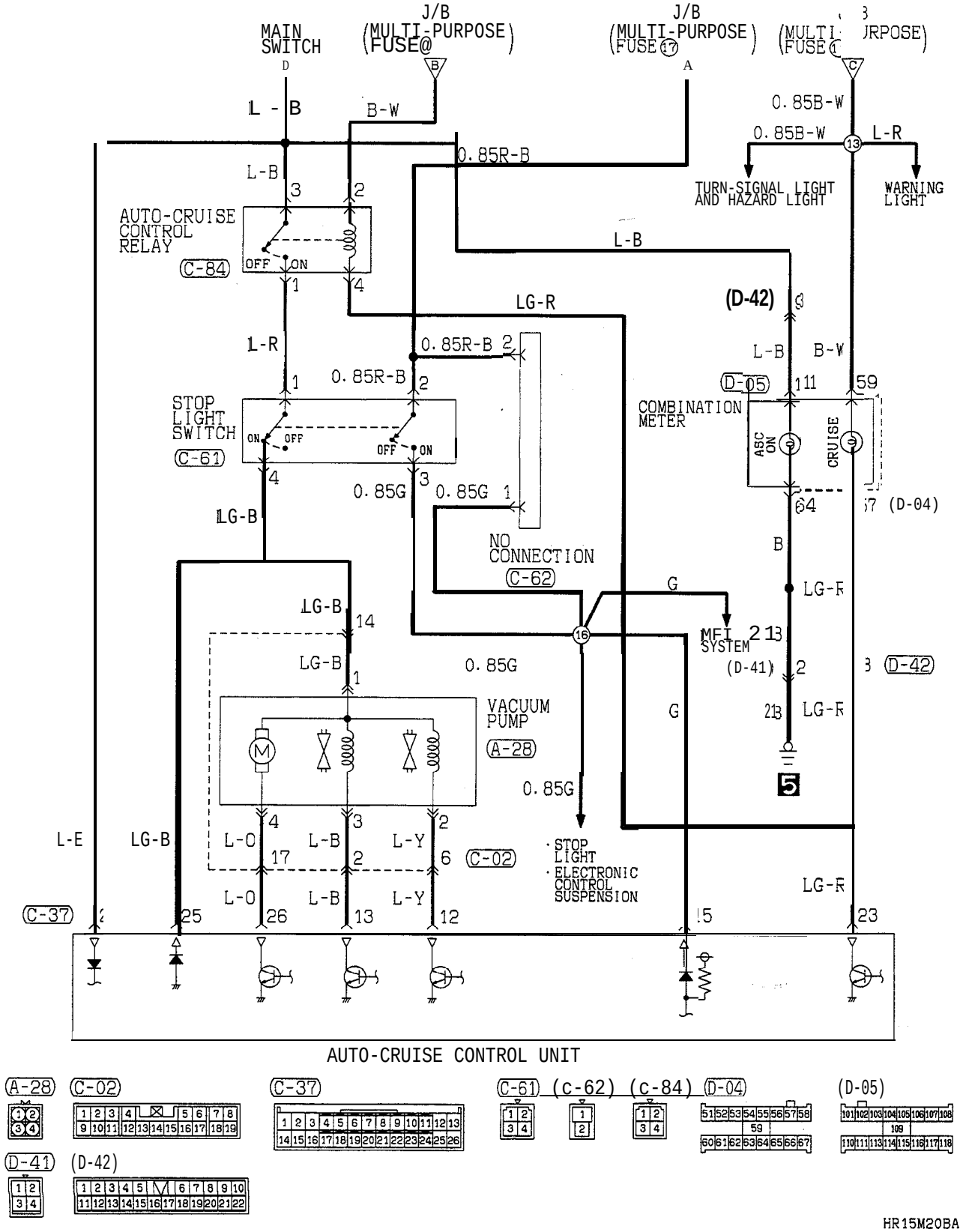

TSB Revision

NOTES

AUTO-CRUISE CONTROL CIRCUIT (1994, 1995 MODELS)

<M/T> TURBO, NON TURBO (CALIFORNIA)

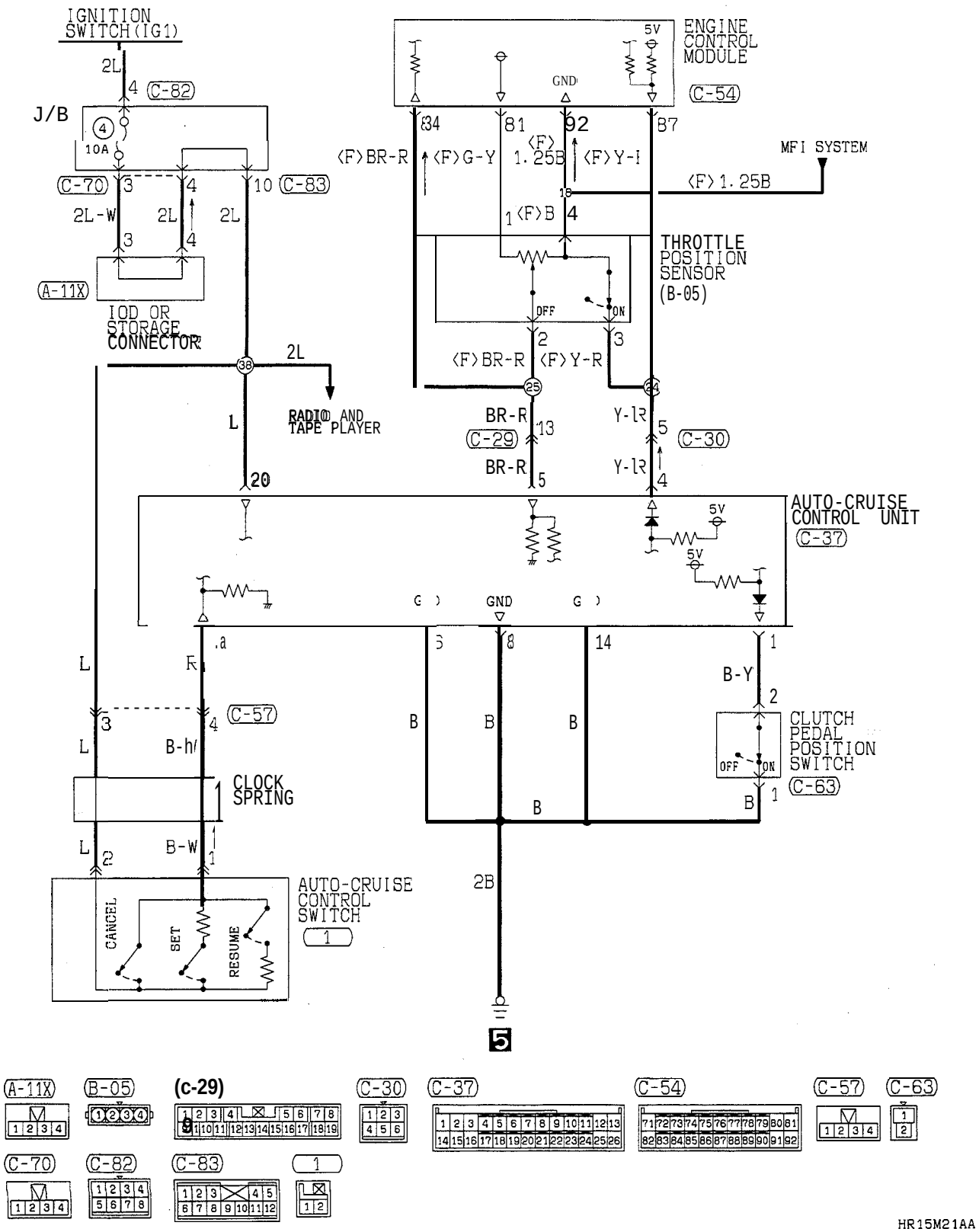

TSB Revision

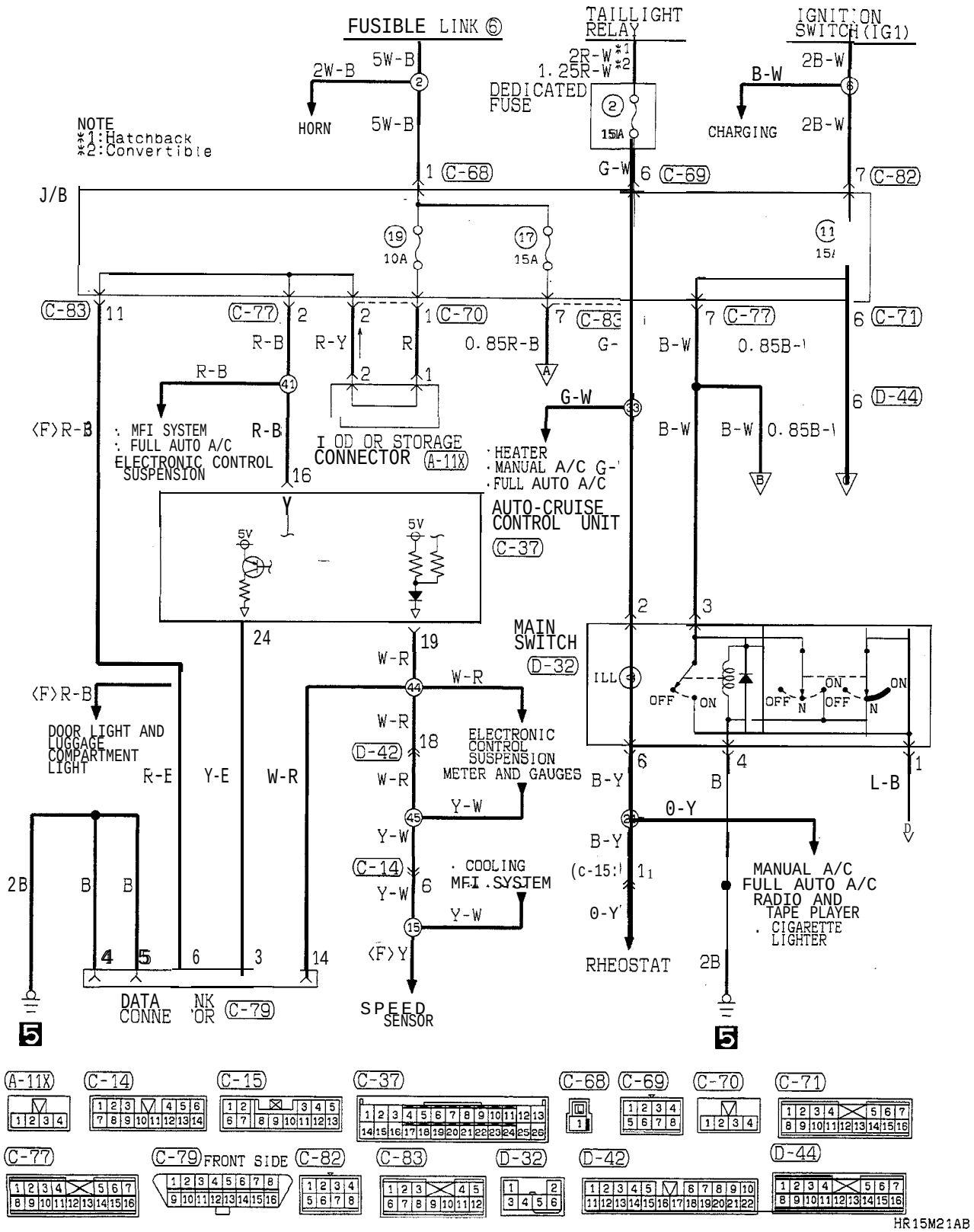
FUSIBLE LINK ⑥
TAILLIGHT RELAY
IGNITION SWITCH (IG1)
NOTE
*1:Hatchback
*2:Convertible
HORN
DEDICATED FUSE
CHARGING
J/B
MFI SYSTEM
FULL AUTO A/C
ELECTRONIC CONTROL SUSPENSION
I OD OR STORAGE CONNECTOR (A-11X)
HEATER
MANUAL A/C
FULL AUTO A/C
AUTO-CRUISE CONTROL UNIT (C-37)
MAIN SWITCH (D-32)
DOOR LIGHT AND LUGGAGE COMPARTMENT LIGHT
ELECTRONIC CONTROL SUSPENSION
METER AND GAUGES
COOLING
MFI SYSTEM
RHEOSTAT
MANUAL A/C
FULL AUTO A/C
RADIO AND TAPE PLAYER
CIGARETTE LIGHTER
DATA LINK CONNECTOR (C-79)
SPEED SENSOR
FRONT SIDE
HR15M21AB

AUTO-CRUISE CONTROL CIRCUIT (1994, 1995 MODELS) <M/T> TURBO, NON TURBO (CALIFORNIA) (CONTINUED)

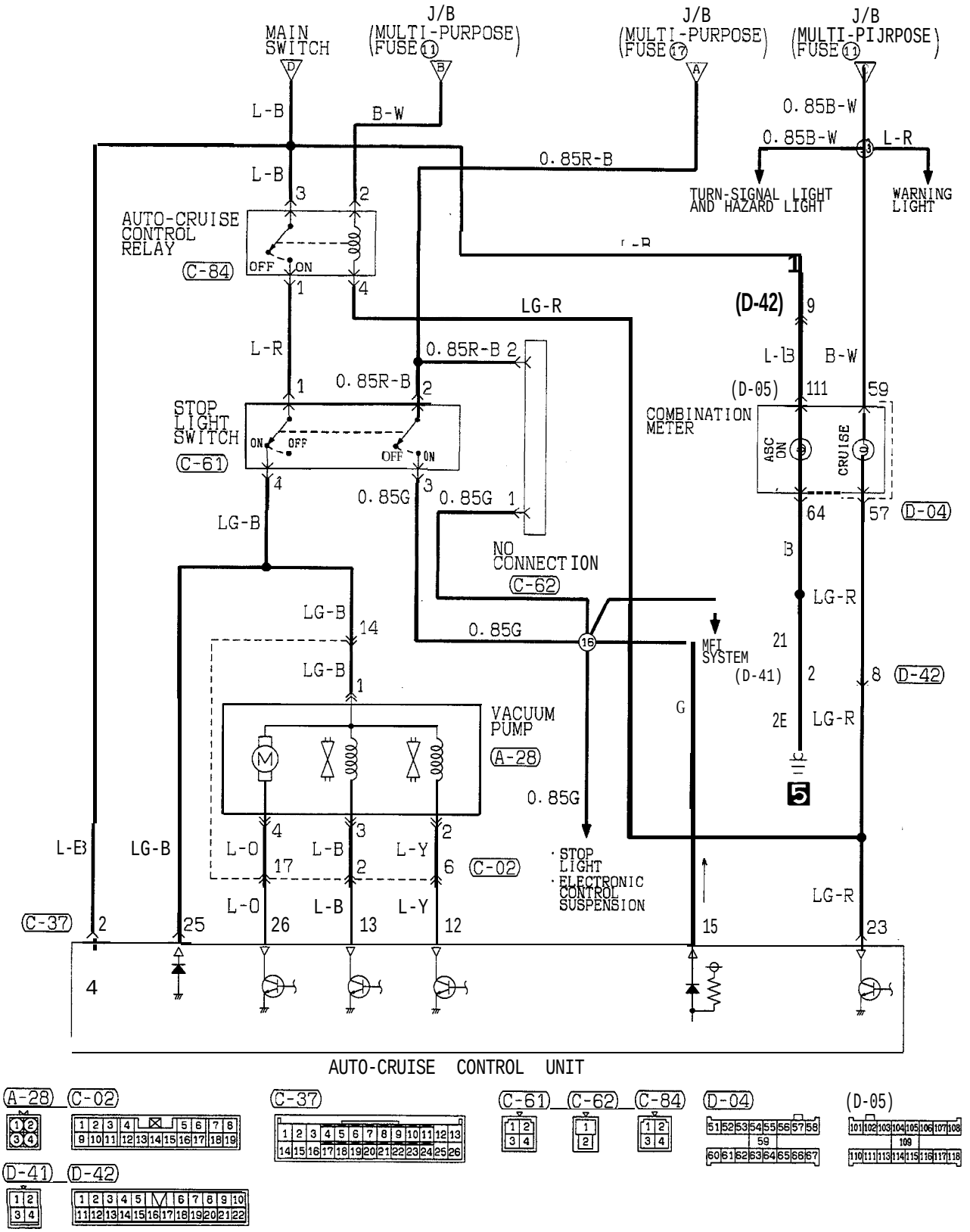

HR15M21BA

TSB Revision

NOTES

AUTO-CRUISE CONTROL CIRCUIT (FROM 1996 MODELS)

<M/T>

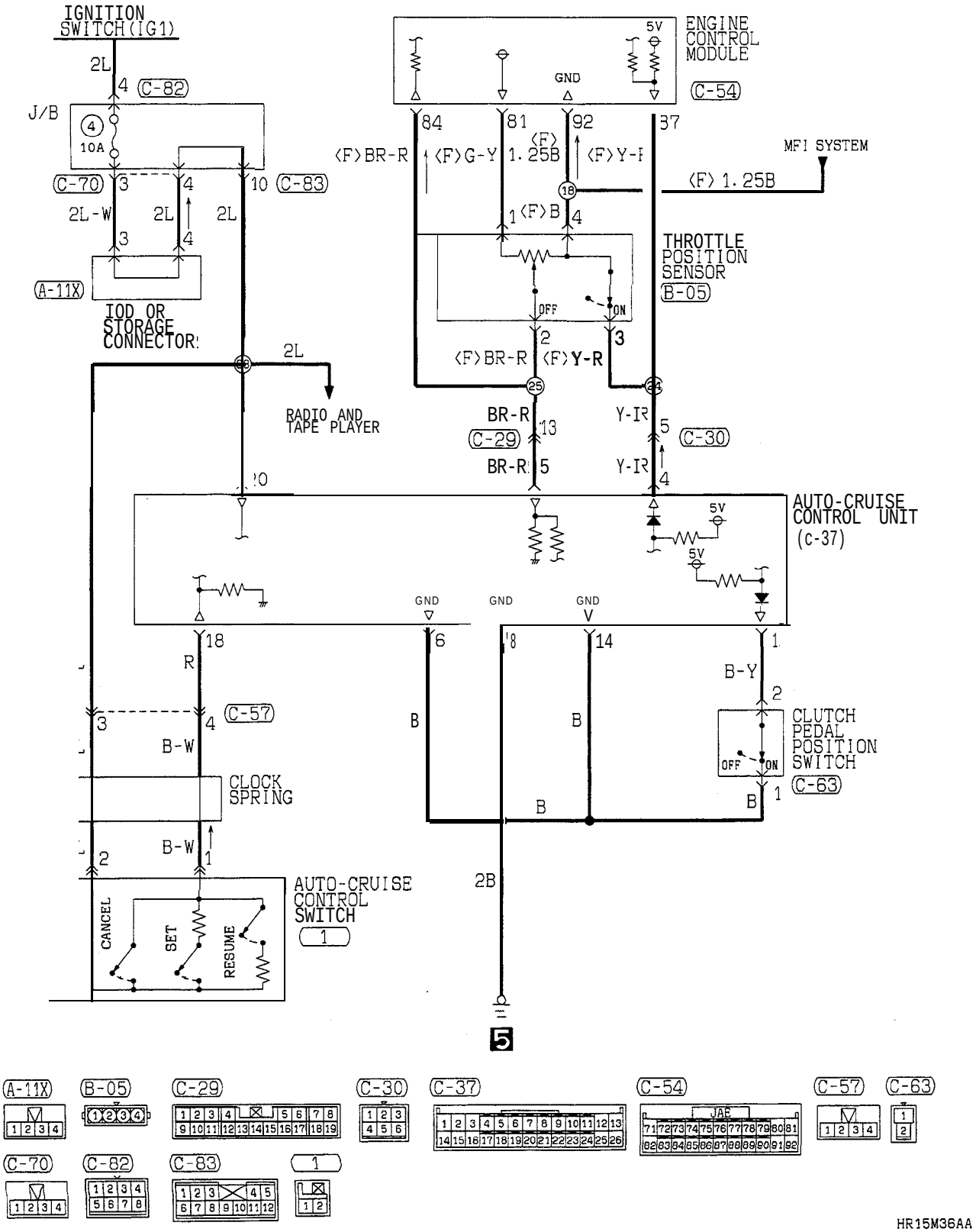

TSB Revision

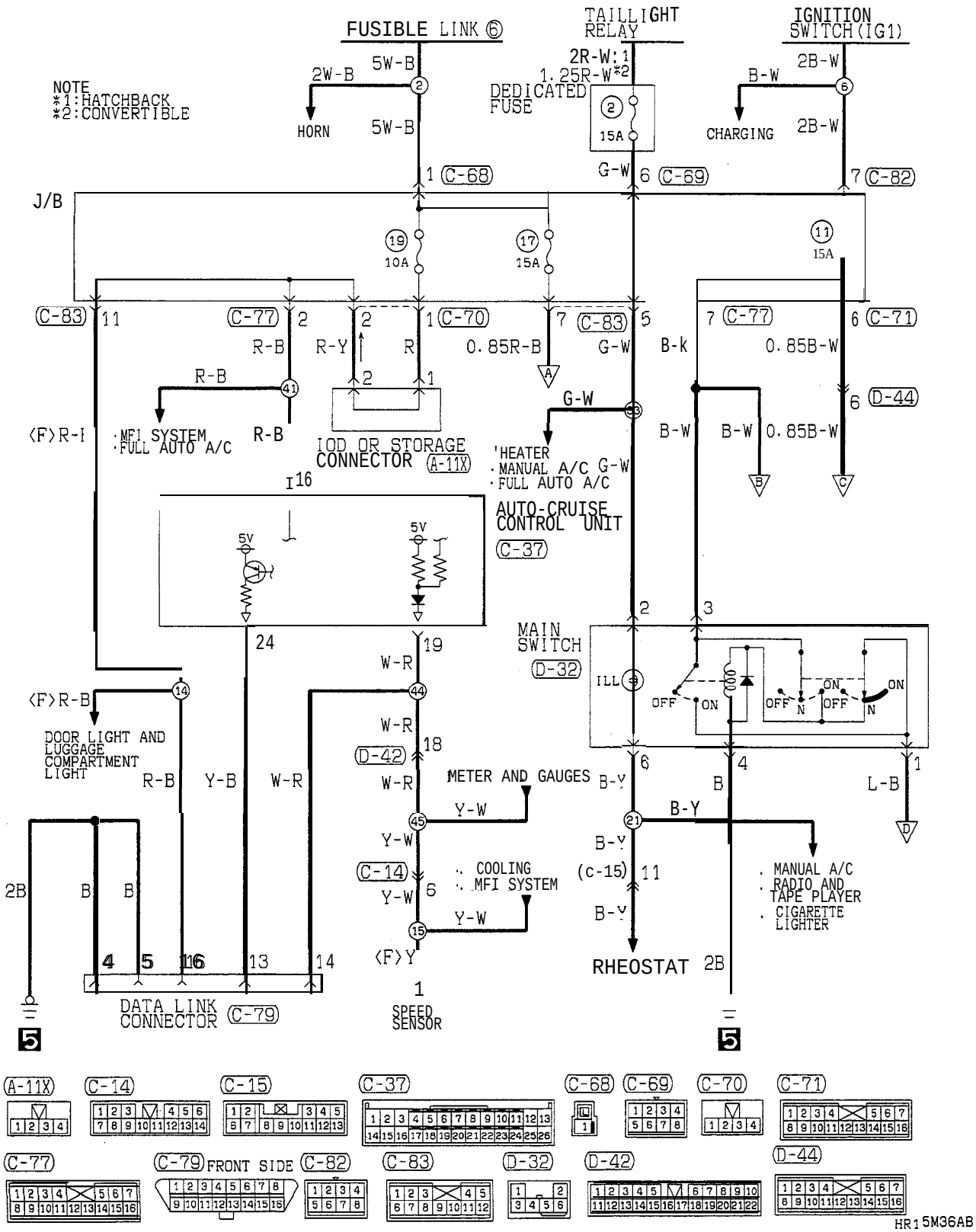
FUSIBLE LINK ⑥
TAILLIGHT RELAY
IGNITION SWITCH(IG1)
NOTE
*1:HATCHBACK
*2:CONVERTIBLE
2W-B
5W-B
HORN
DEDICATED FUSE
2R-W:1
1.25R-W*2
15A
B-W
2B-W
CHARGING
J/B
10A
15A
(C-68)
(C-69)
(C-82)
(C-83)
(C-77)
(C-70)
(C-71)
(D-44)
R-B
R-Y
R
0.85R-B
G-W
B-k
0.85B-W
B-W
(F)R-I
MFI SYSTEM
FULL AUTO A/C
IOD OR STORAGE CONNECTOR (A-11X)
HEATER
MANUAL A/C
FULL AUTO A/C
AUTO-CRUISE CONTROL UNIT
(C-37)
5V
MAIN SWITCH
(D-32)
ILL
OFF
ON
N
(F)R-B
DOOR LIGHT AND LUGGAGE COMPARTMENT LIGHT
Y-B
W-R
(D-42)
METER AND GAUGES
Y-W
B-Y
B
L-B
(C-14)
COOLING
MFI SYSTEM
(c-15)
MANUAL A/C
RADIO AND TAPE PLAYER
CIGARETTE LIGHTER
2B
(F)Y
RHEOSTAT
DATA LINK CONNECTOR (C-79)
SPEED SENSOR
(A-11X)
(C-14)
(C-15)
(C-37)
(C-68)
(C-69)
(C-70)
(C-71)
(C-77)
(C-79) FRONT SIDE
(C-82)
(C-83)
(D-32)
(D-42)
(D-44)
HR15M36AB

AUTO-CRUISE CONTROL CIRCUIT (FROM 1996 MODELS) <M/T> (CONTINUED)

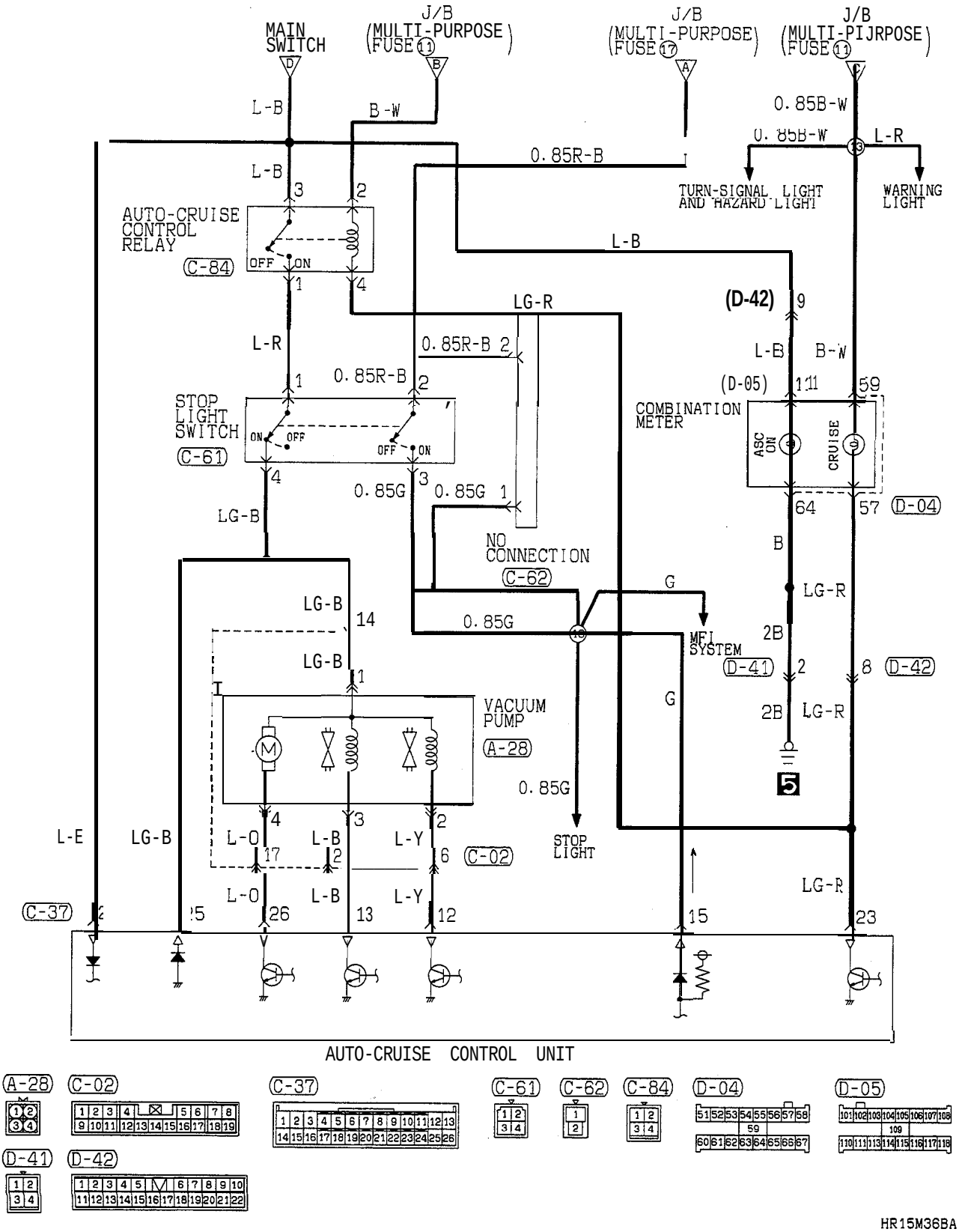

TSB Revision

NOTES

AUTO-CRUISE CONTROL CIRCUIT (1992 MODEL)

<A/T>

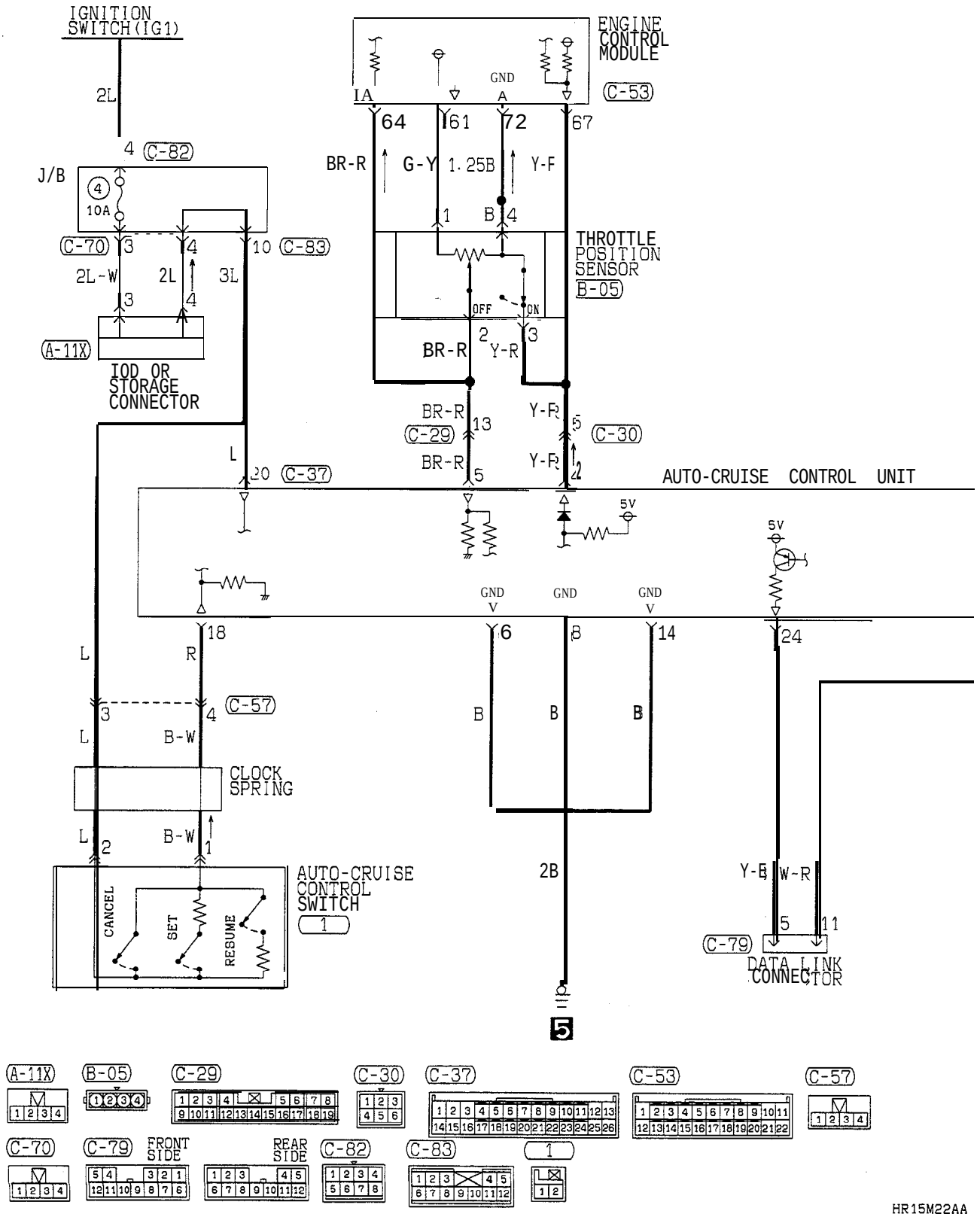

TSB Revision

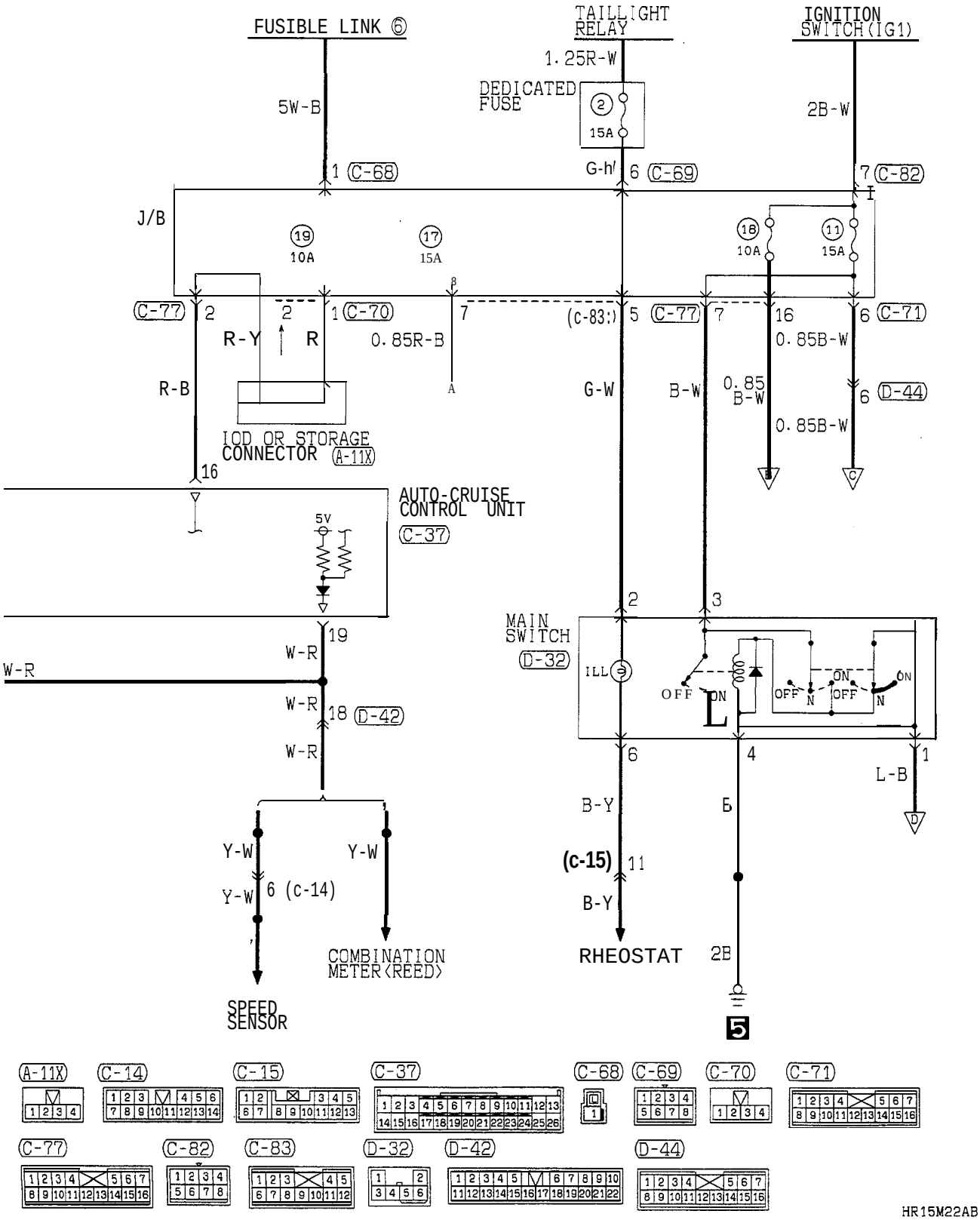

TSB Revision

AUTO-CRUISE CONTROL CIRCUIT (1992 MODEL) <A/T> (CONTINUED)

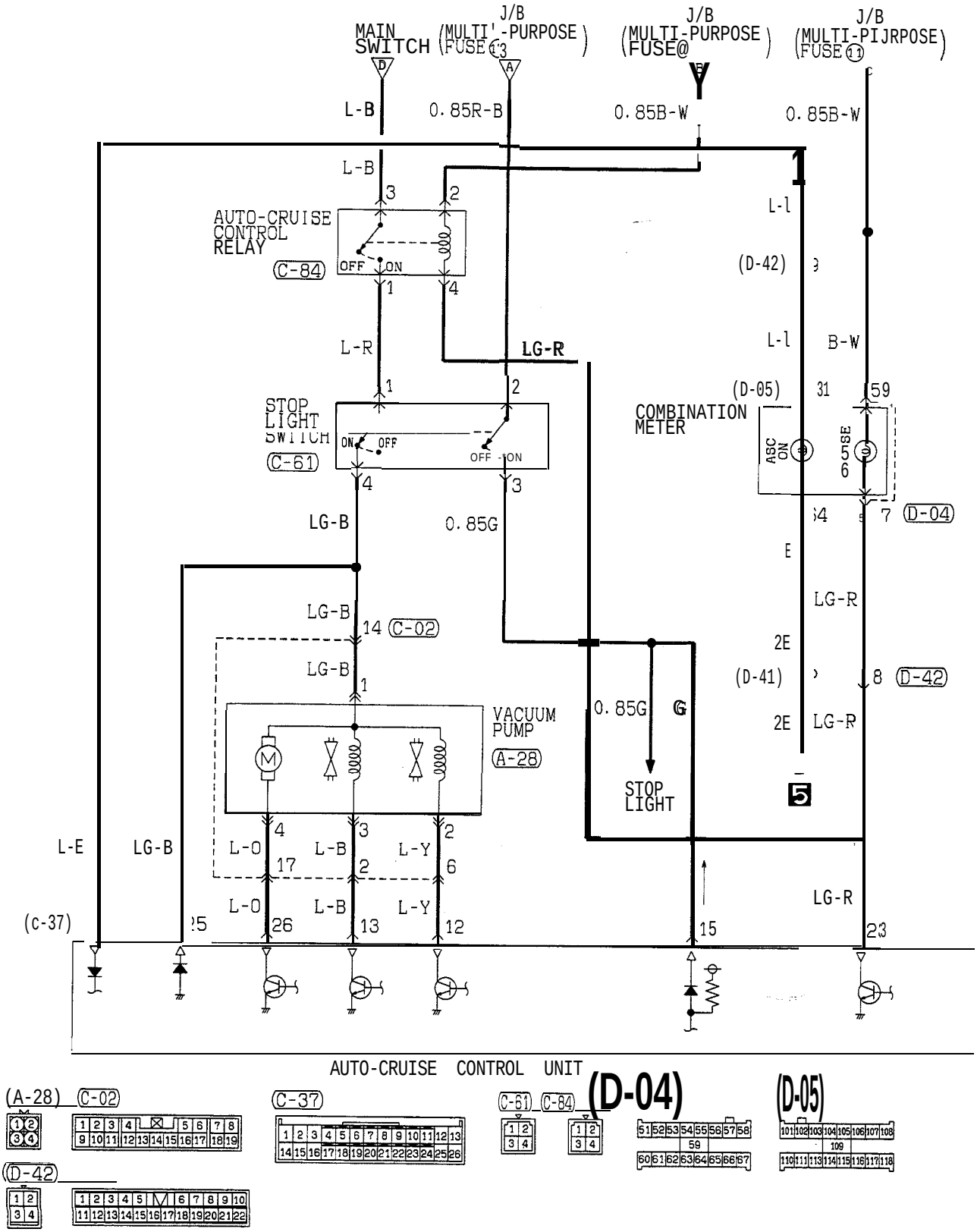

TSB Revision

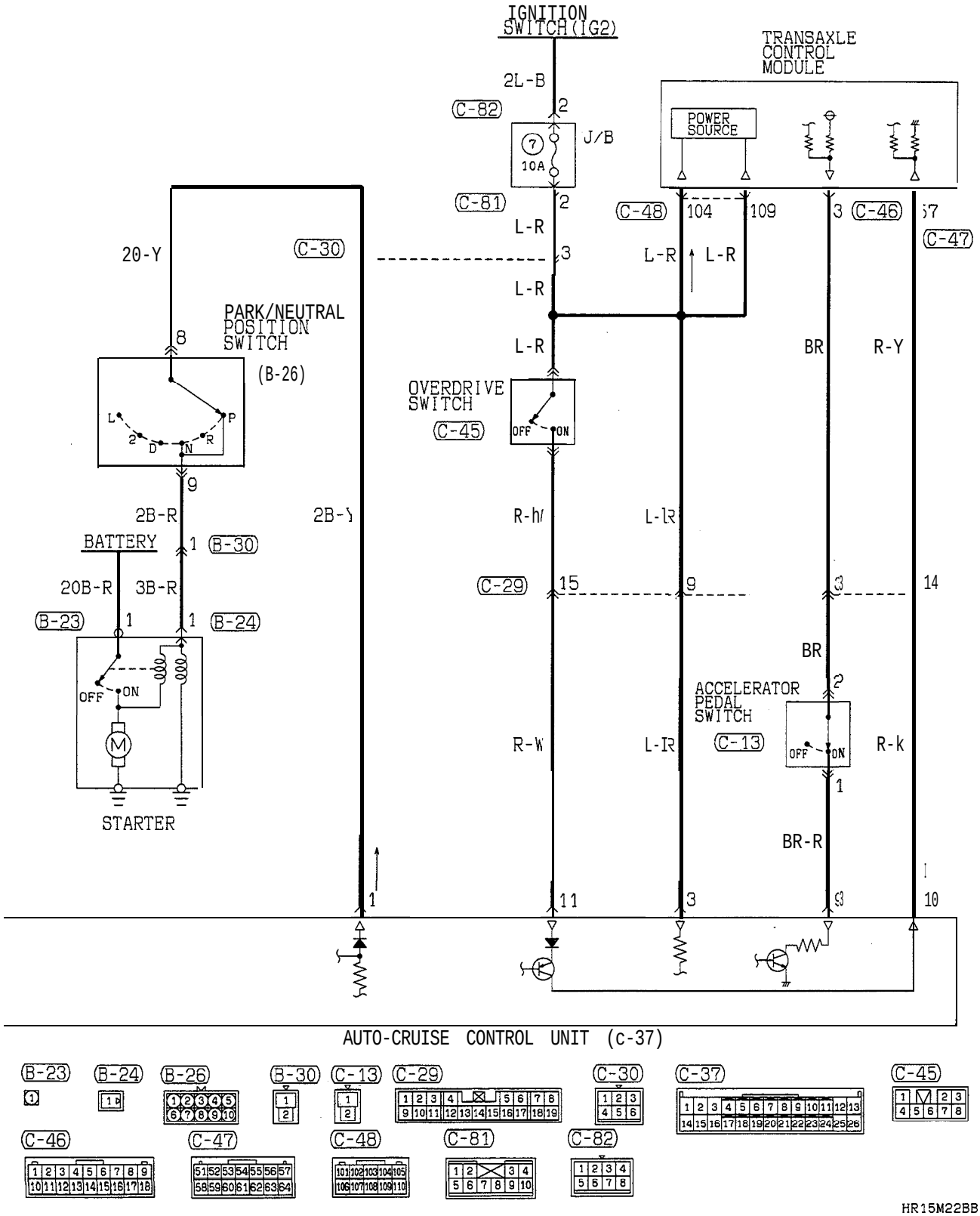
IGNITION SWITCH (IG2)
TRANSAXLE CONTROL MODULE
POWER SOURCE
2L-B
C-82
J/B
10A
C-81
L-R
C-48
104
109
C-46
C-47
20-Y
C-30
PARK/NEUTRAL POSITION SWITCH
(B-26)
OVERDRIVE SWITCH
C-45
OFF
ON
BR
R-Y
2B-R
BATTERY
B-30
20B-R
3B-R
B-23
B-24
C-29
15
14
ACCELERATOR PEDAL SWITCH
C-13
R-W
R-k
BR-R
STARTER
AUTO-CRUISE CONTROL UNIT (c-37)
B-23
B-24
B-26
B-30
C-13
C-29
C-30
C-37
C-45
C-46
C-47
C-48
C-81
C-82
HR15M22BB

AUTO-CRUISE CONTROL CIRCUIT (1993 MODELS)

<A/T>

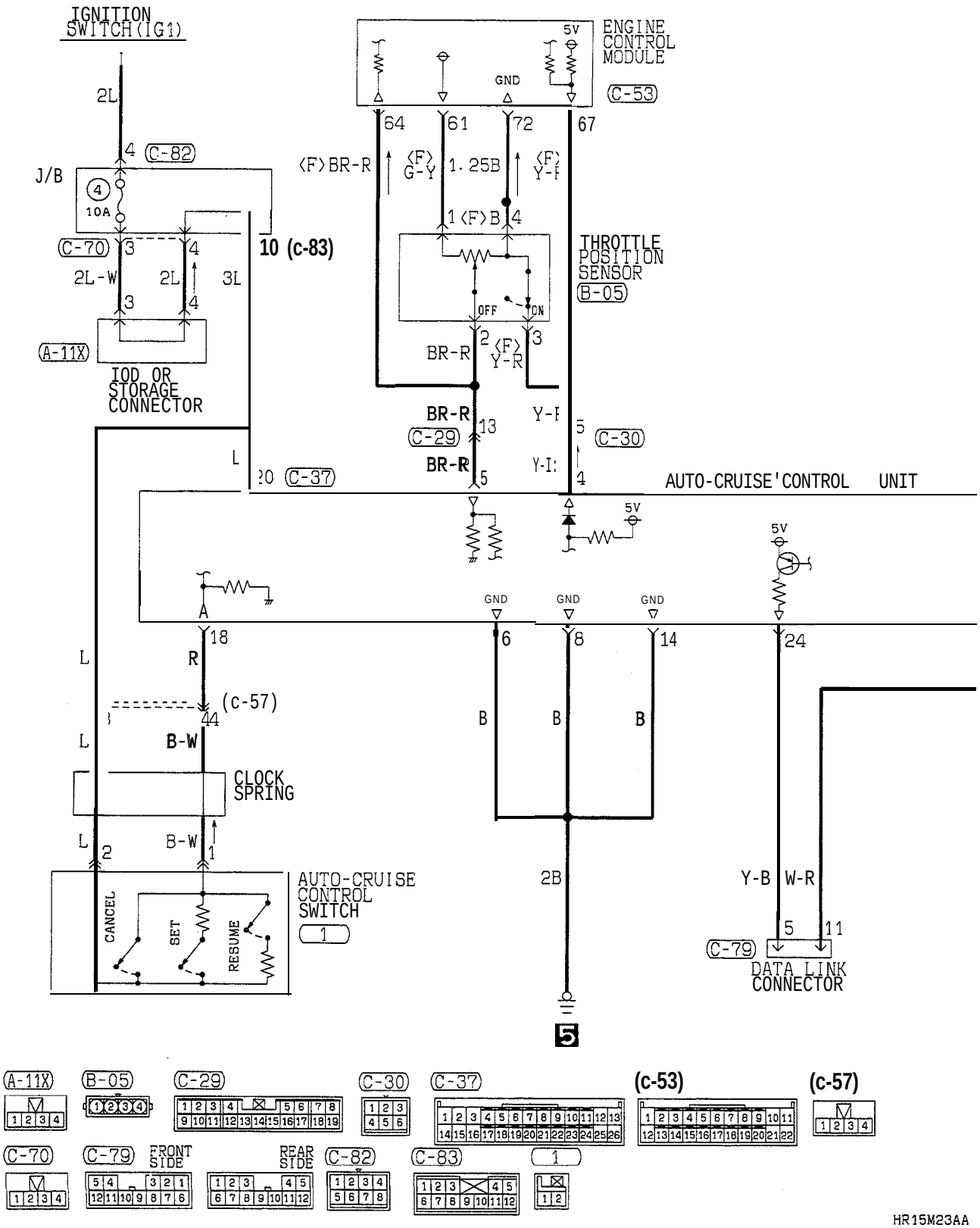

TSB Revision

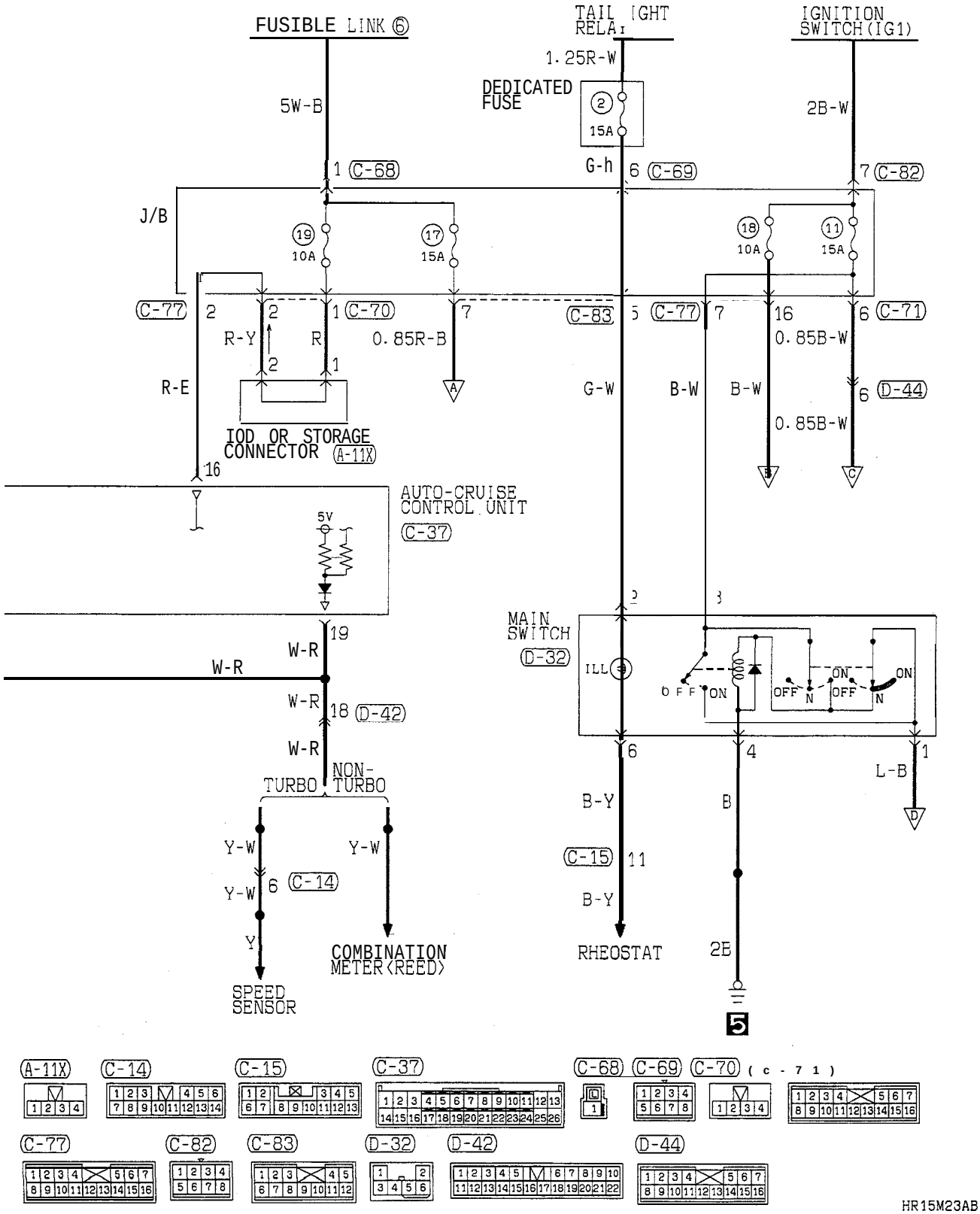

TSB Revision

AUTO-CRUISE CONTROL CIRCUIT (1993 MODELS) <A/T> (CONTINUED)

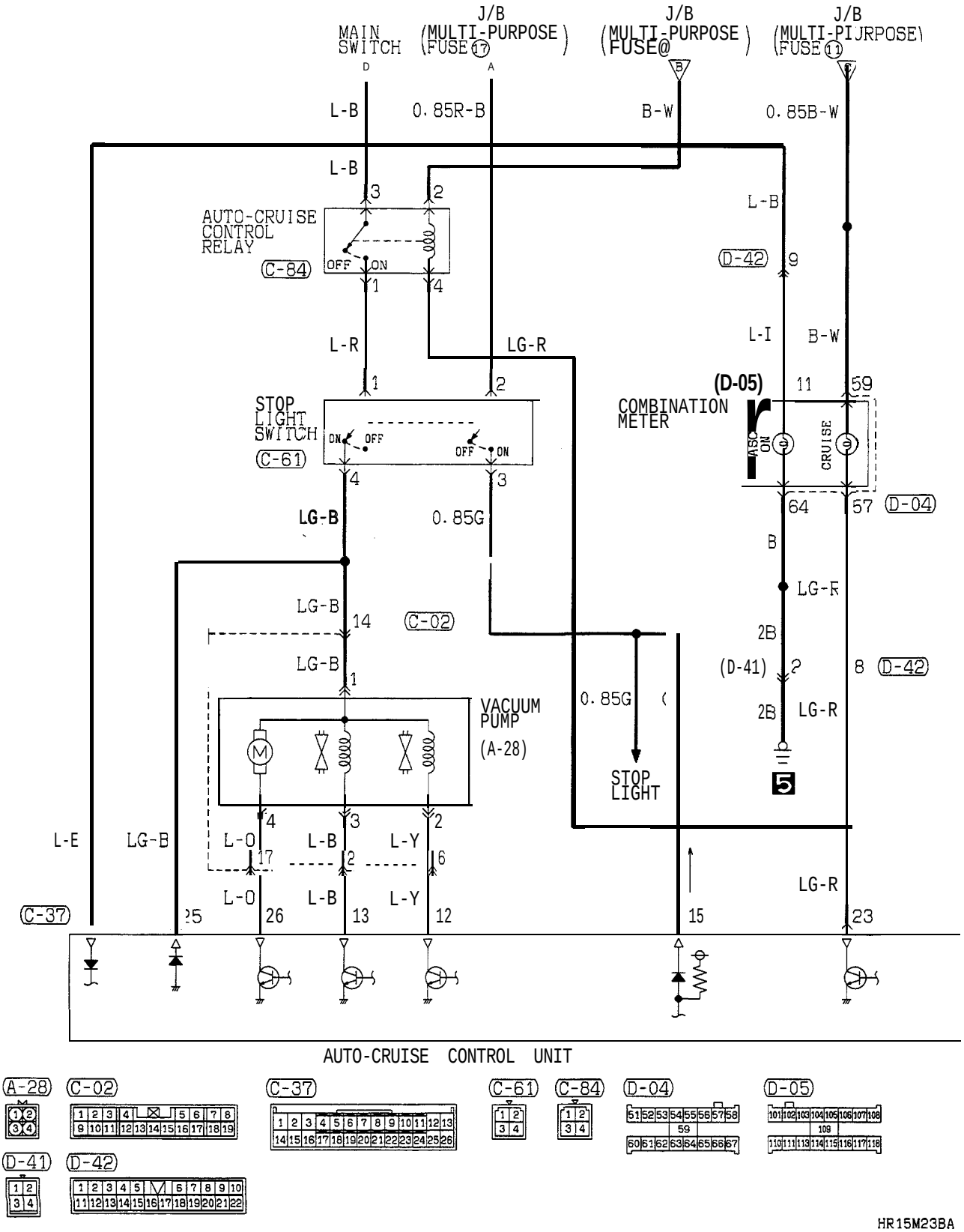

TSB Revision

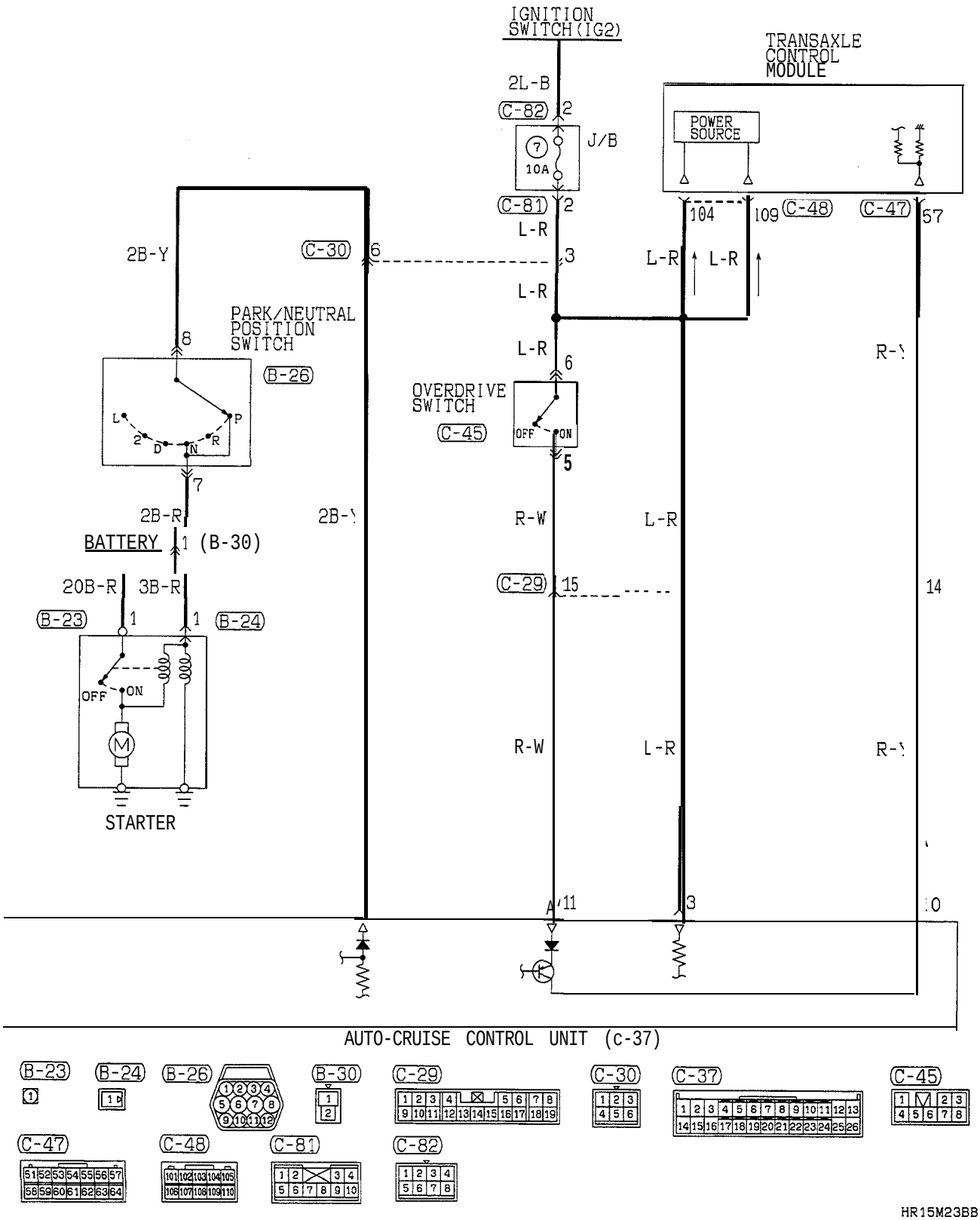

TSB Revision

AUTO-CRUISE CONTROL CIRCUIT (1994, 1995 MODELS)

<A/T> (FEDERAL)

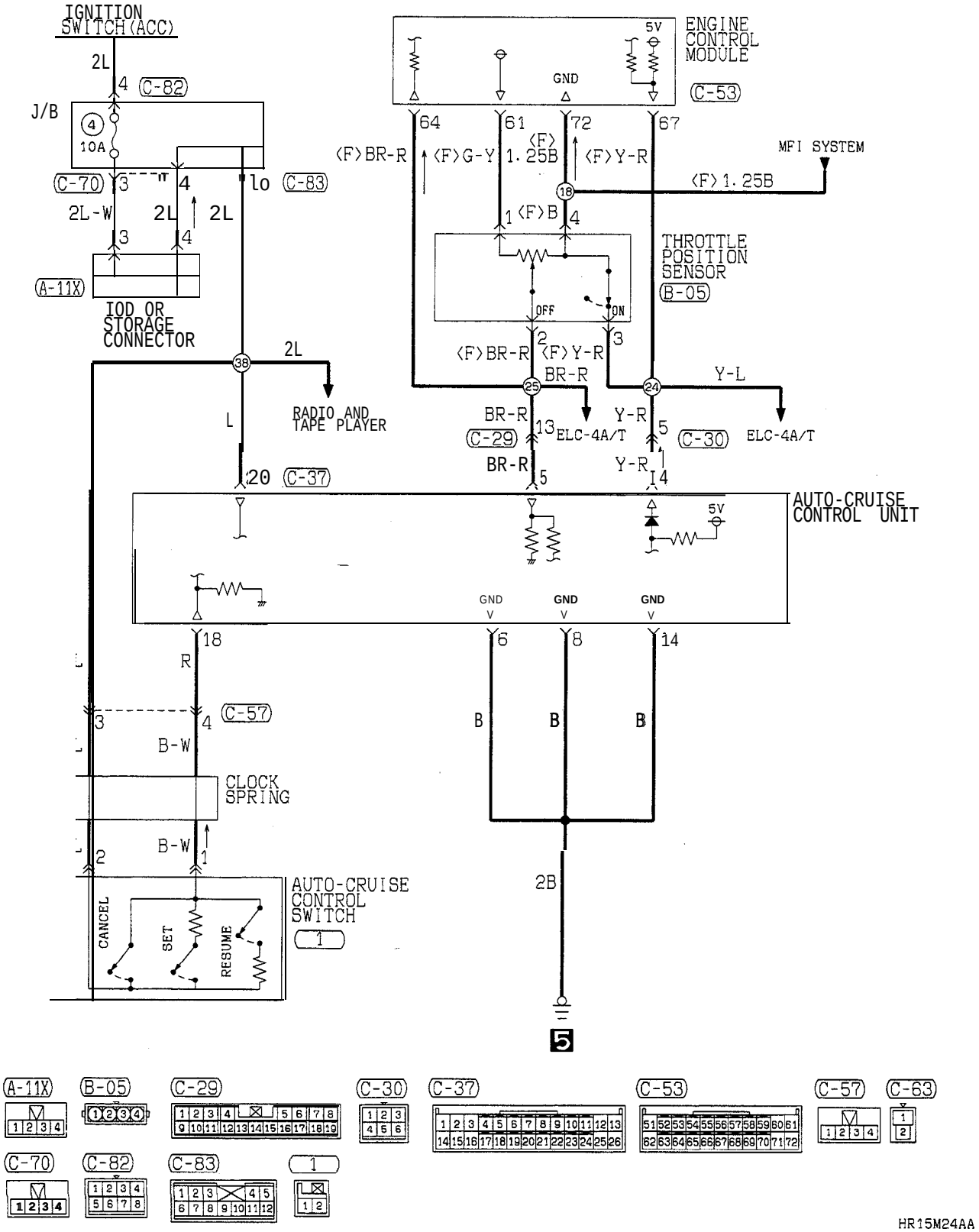

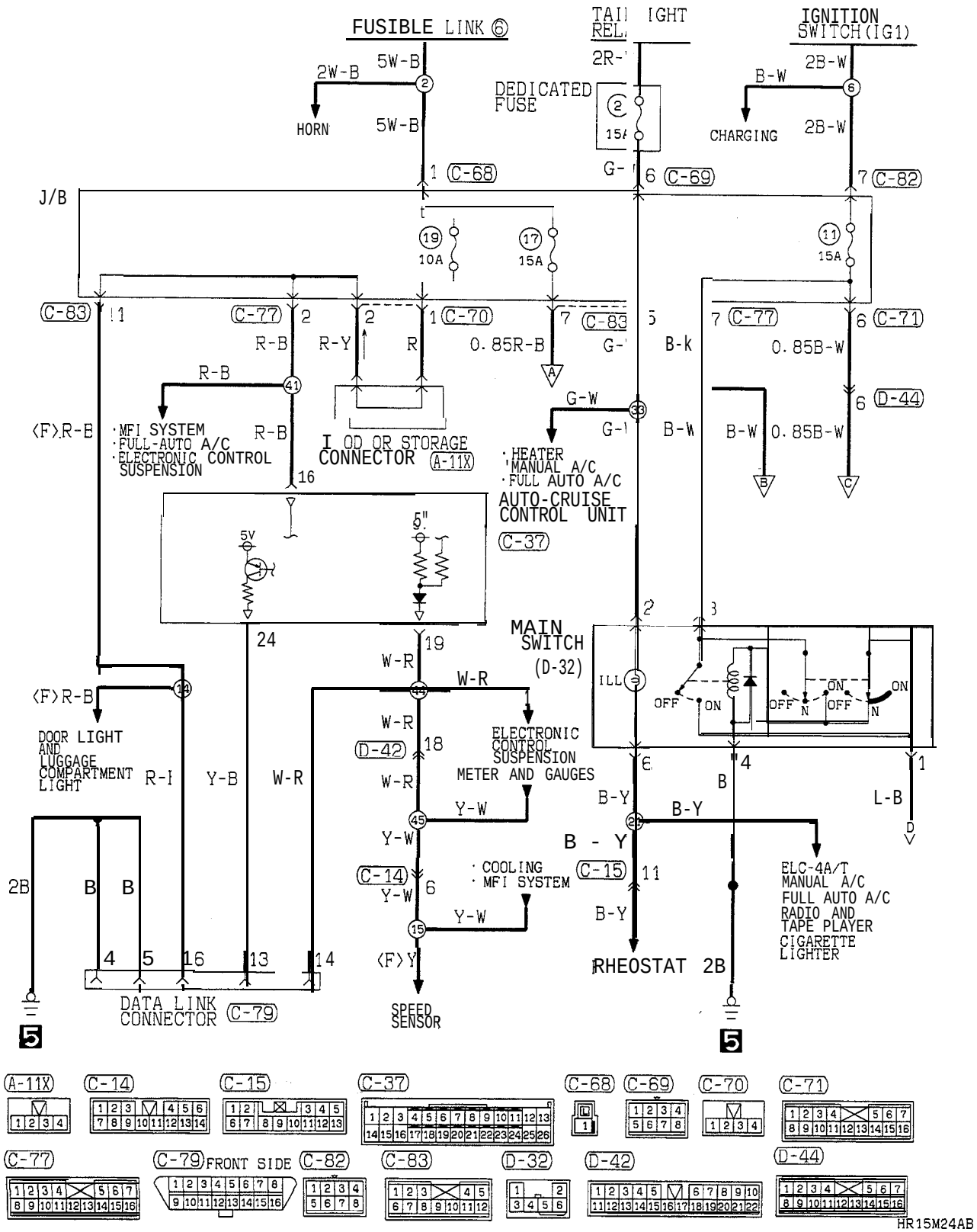

TSB Revision

AUTO-CRUISE CONTROL CIRCUIT (1994, 1995 MODELS) <A/T> (FEDERAL) (CONTINUED)

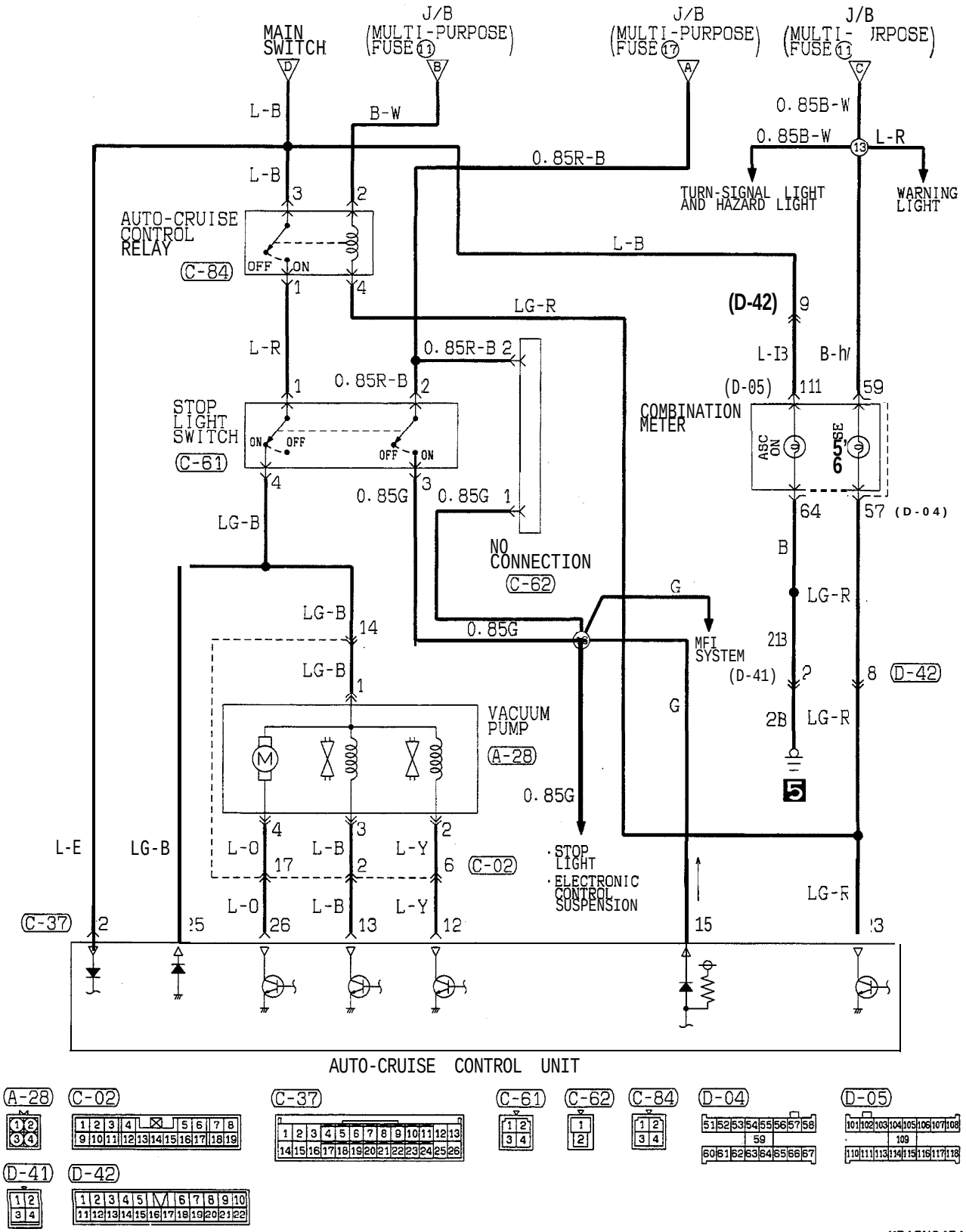

TSB Revision

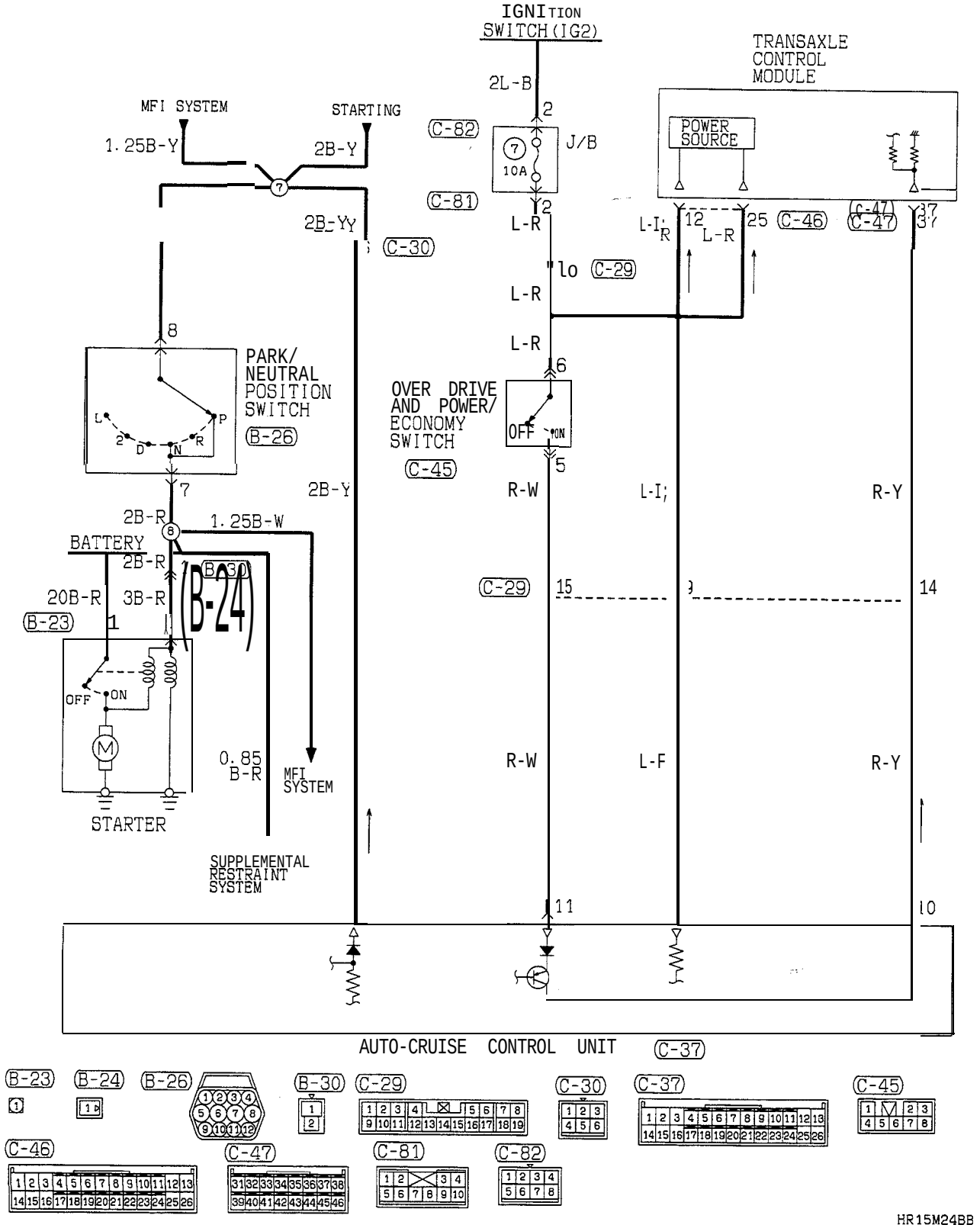

TSB Revision

AUTO-CRUISE CONTROL CIRCUIT (1994, 1995 MODELS)

<A/T> (CALIFORNIA)

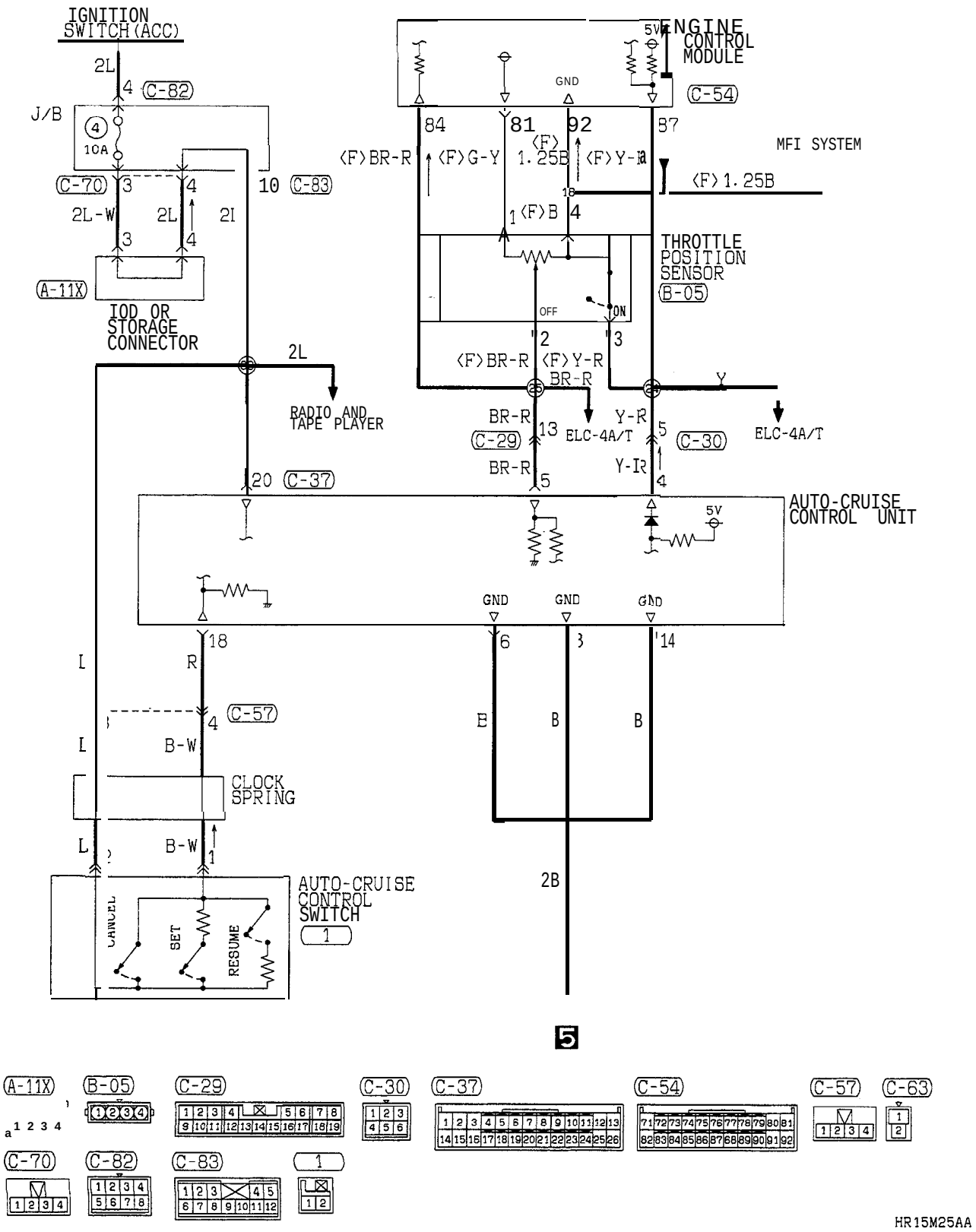

TSB Revision

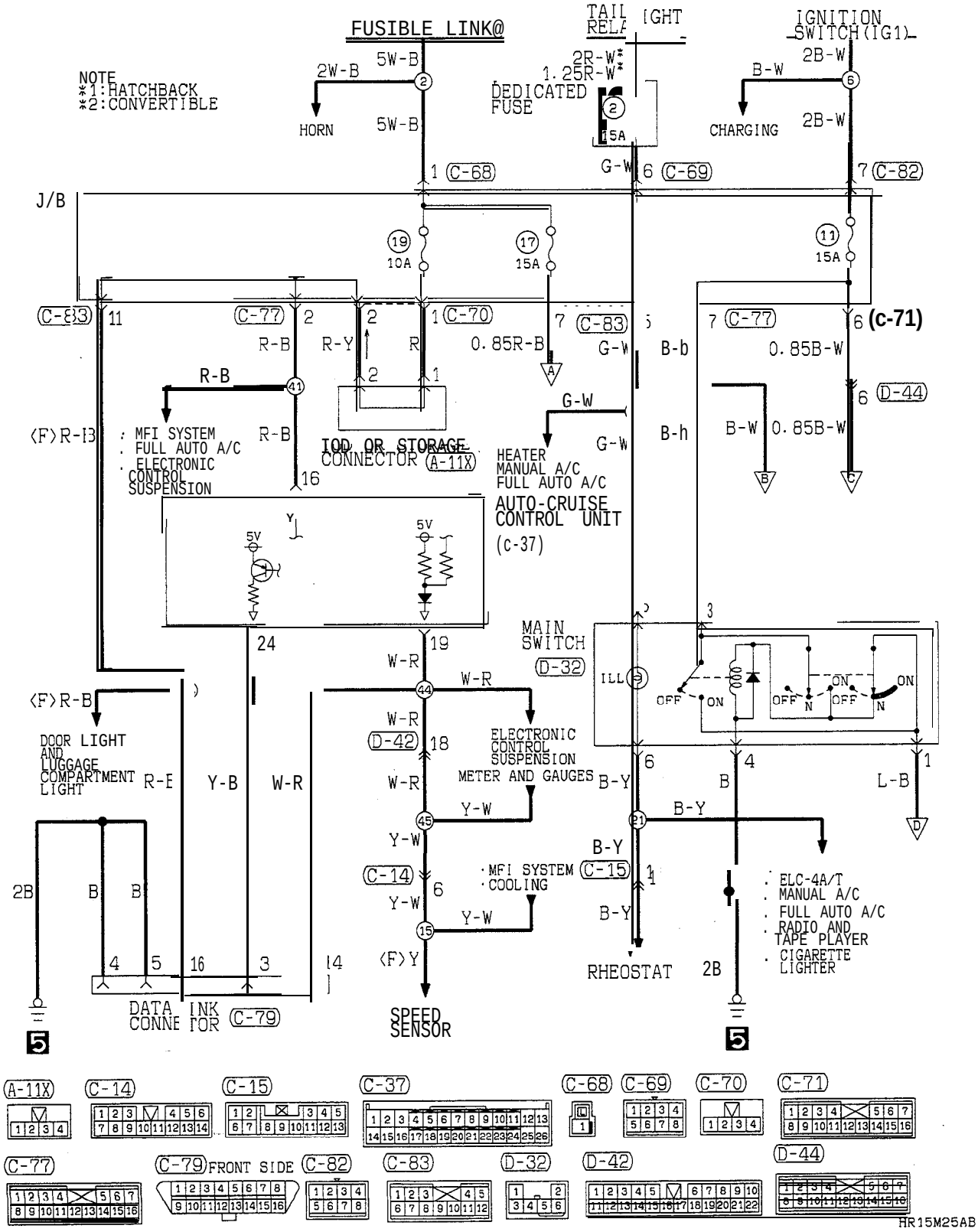

TSB Revision

AUTO-CRUISE CONTROL CIRCUIT (1994, 1995 MODELS) <A/T> (CALIFORNIA) (CONTINUED)

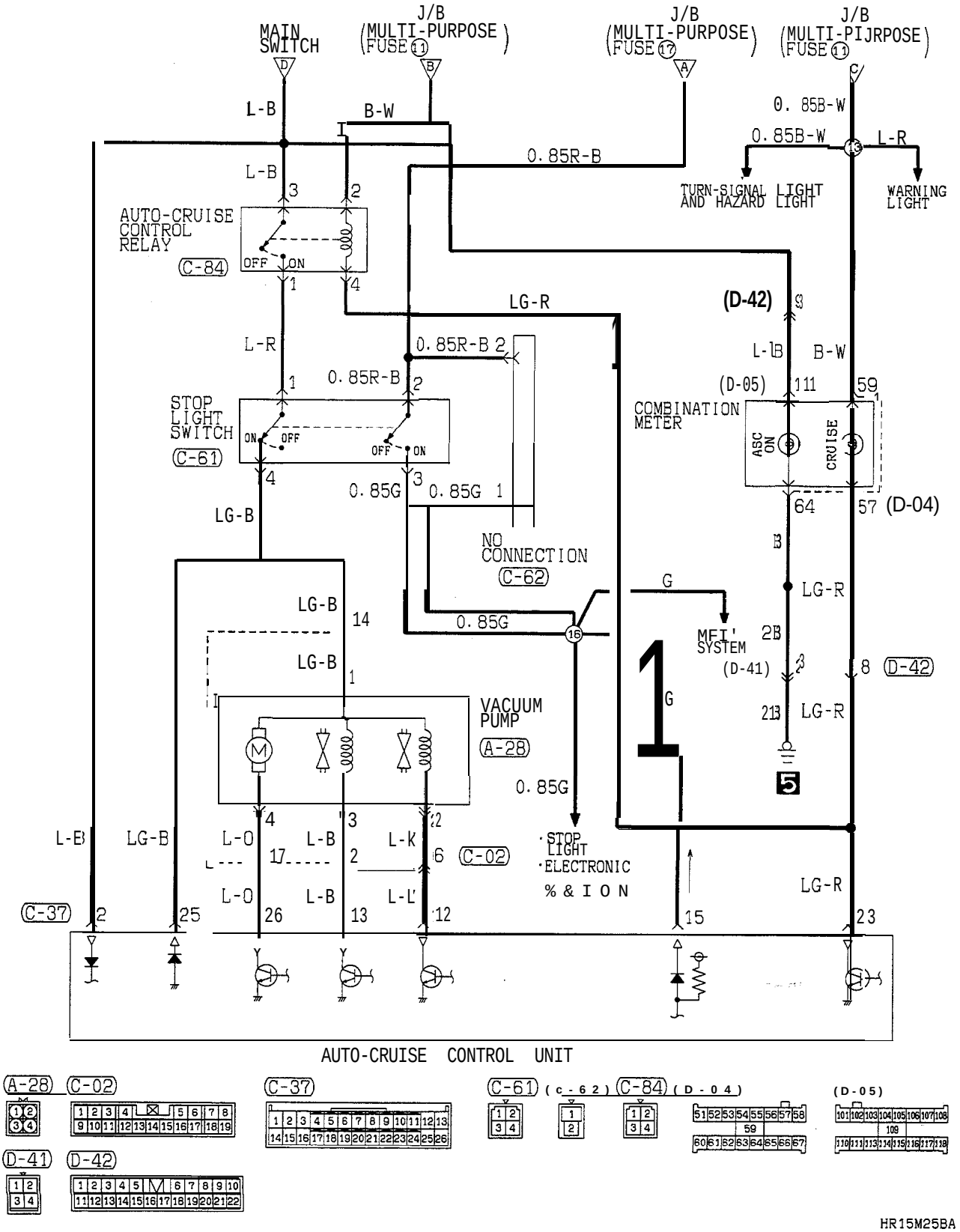

TSB Revision

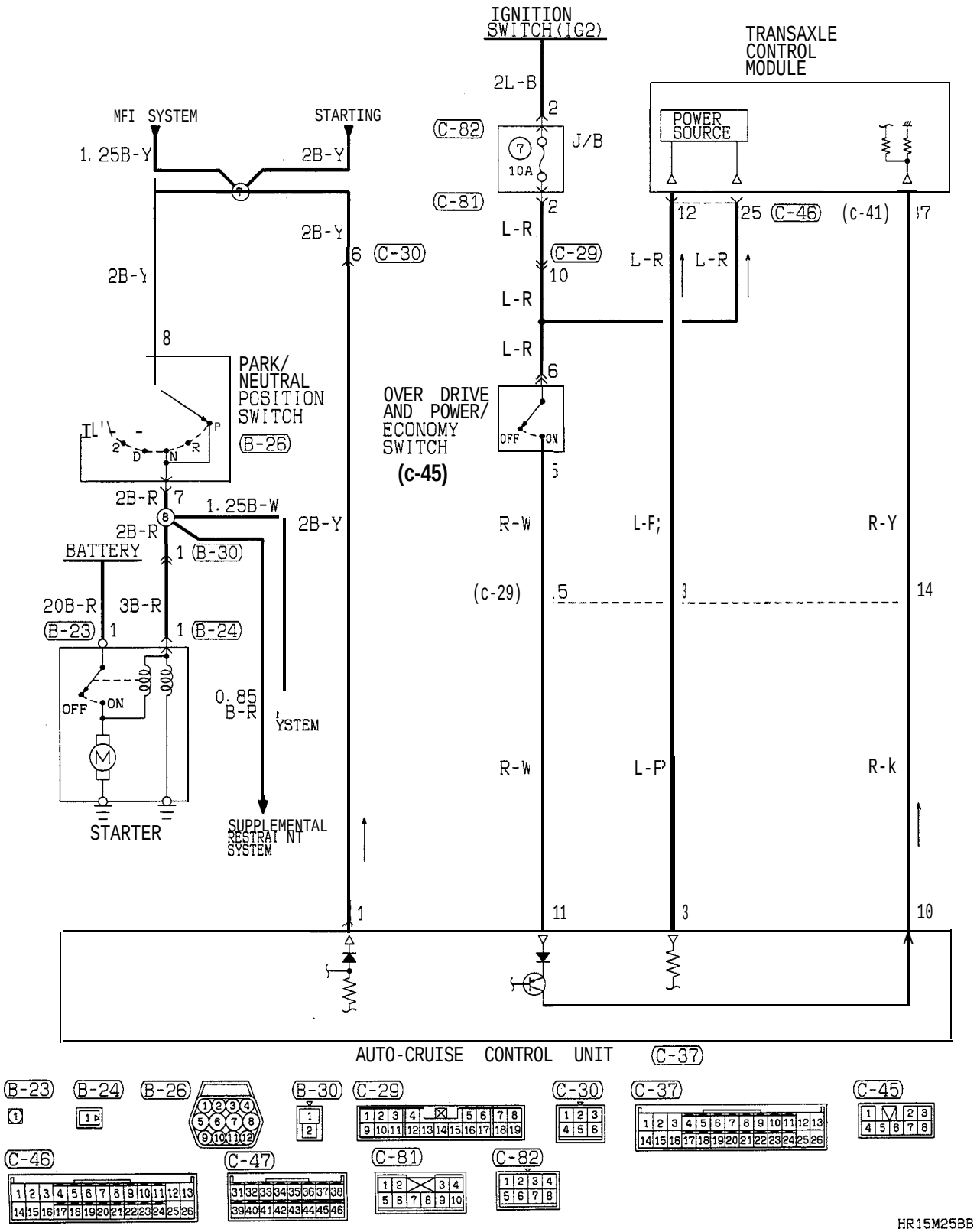

TSB Revision

AUTO-CRUISE CONTROL CIRCUIT (FROM 1996 MODELS) <A/T>

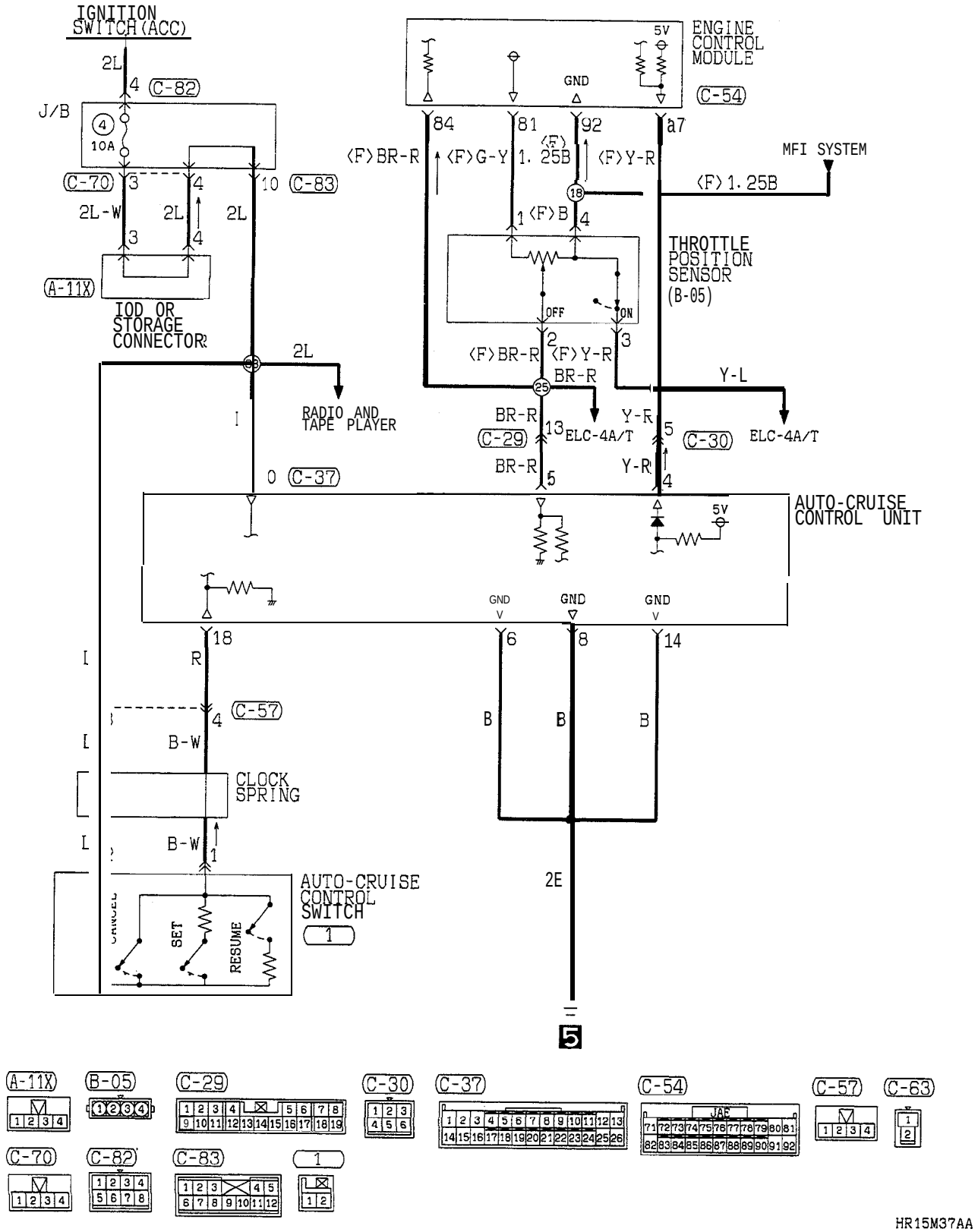

TSB Revision

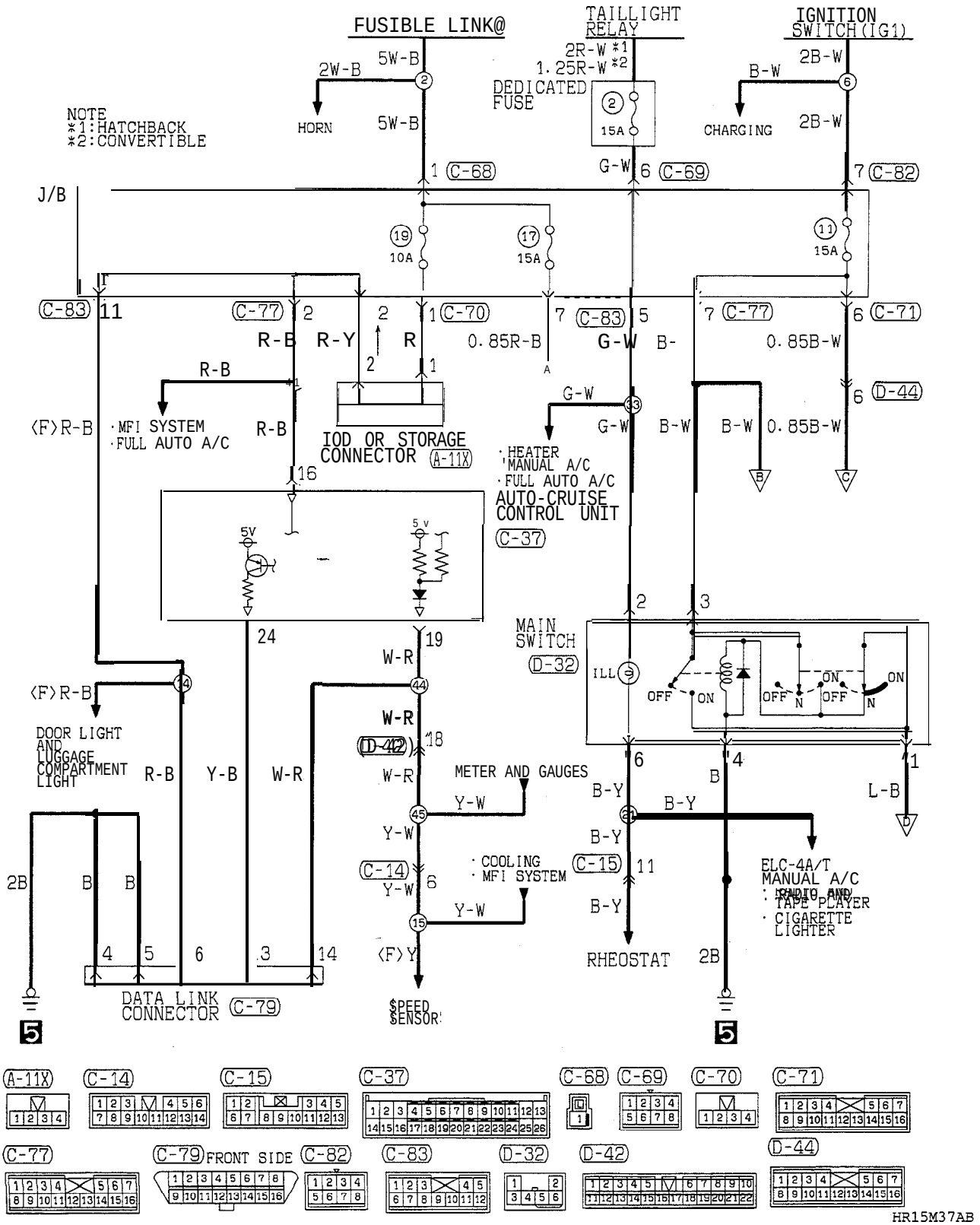

TSB Revision

AUTO-CRUISE CONTROL CIRCUIT (FROM 1996 MODELS) <A/T> (CONTINUED)

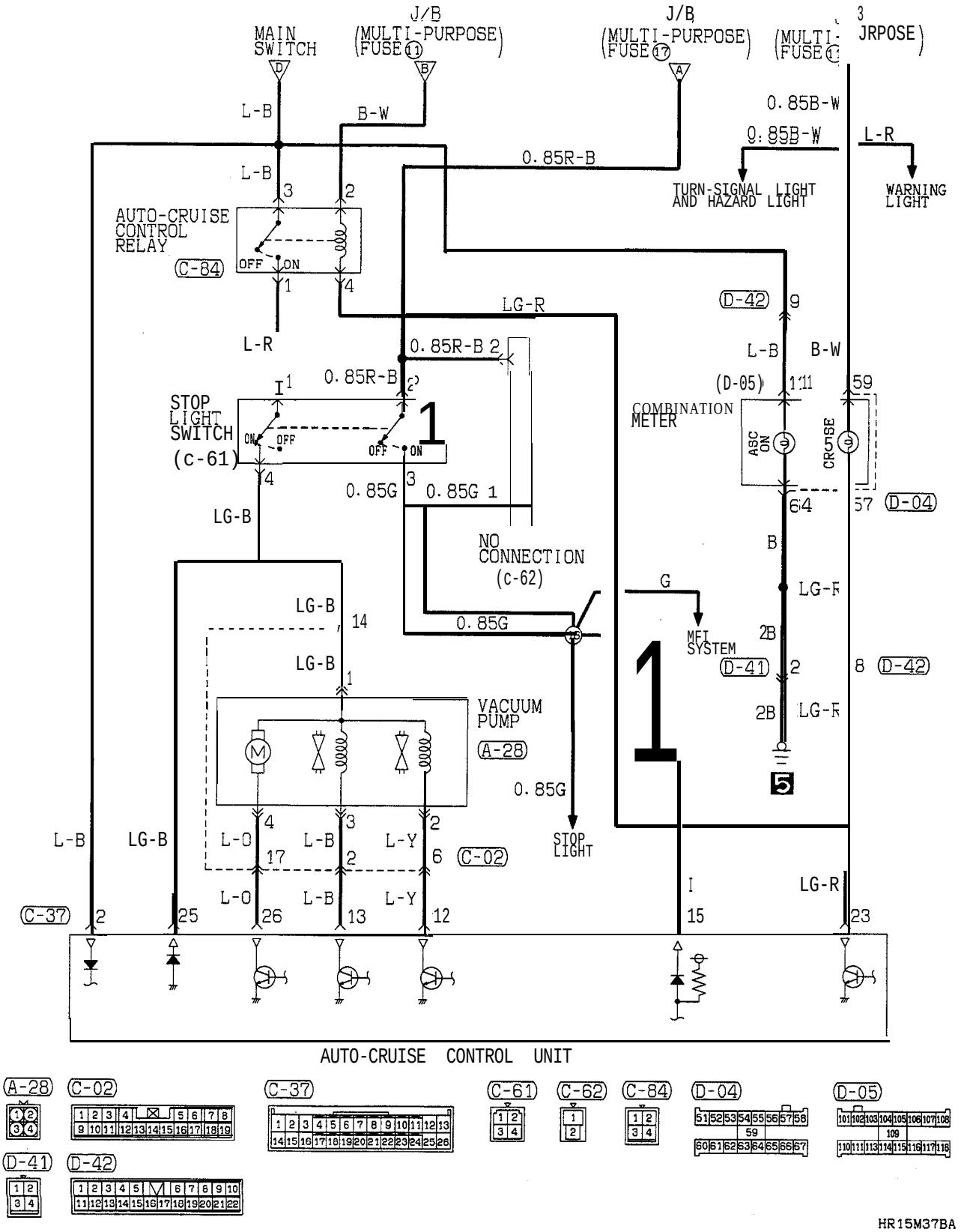

TSB Revision

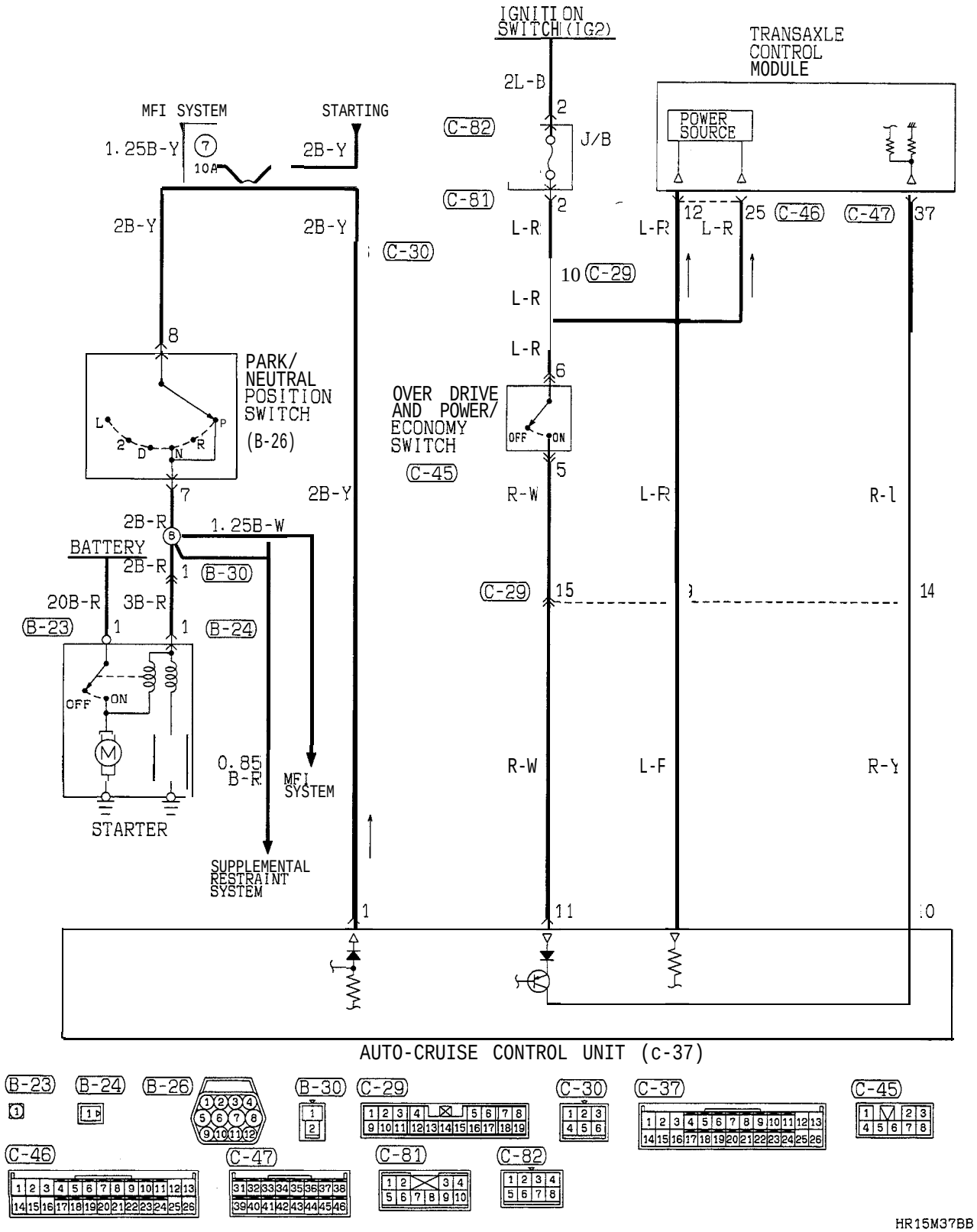
IGNITION SWITCH (IG2)
TRANSAXLE CONTROL MODULE
POWER SOURCE
MFI SYSTEM
STARTING
1.25B-Y
10A
2B-Y
2L-B
J/B
C-82
C-81
C-30
C-29
C-46
C-47
L-R
PARK/ NEUTRAL POSITION SWITCH
(B-26)
OVER DRIVE AND POWER/ ECONOMY SWITCH
C-45
OFF
ON
R-W
R-l
1.25B-W
BATTERY
B-30
20B-R
3B-R
B-23
B-24
STARTER
0.85 B-R
MFI SYSTEM
SUPPLEMENTAL RESTRAINT SYSTEM
L-F
R-Y
AUTO-CRUISE CONTROL UNIT (c-37)
B-23
B-24
B-26
B-30
C-29
C-30
C-37
C-45
C-46
C-47
C-81
C-82
HR15M37BB

POWER SEAT CIRCUIT (UP TO 1993 MODELS)

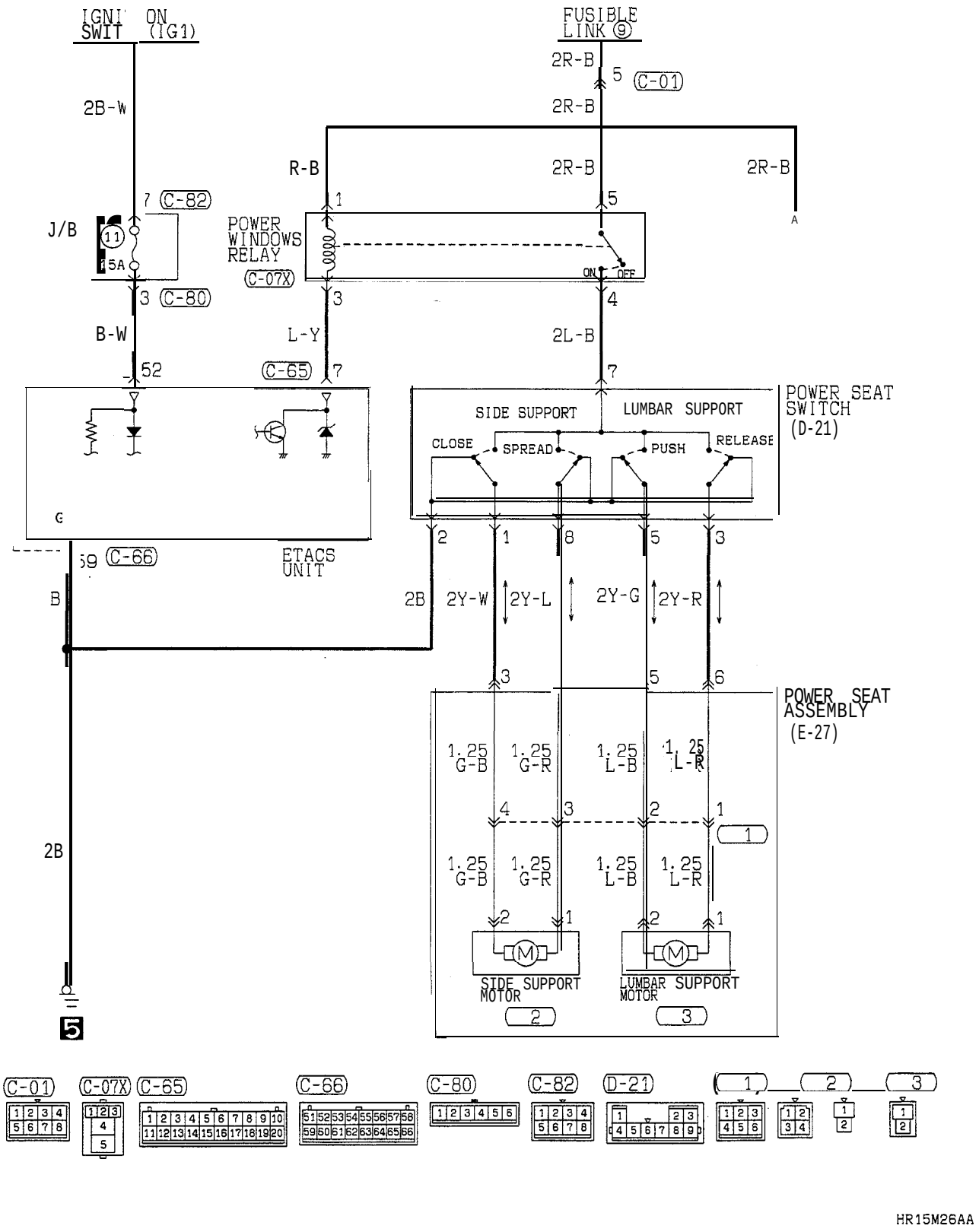

TSB Revision

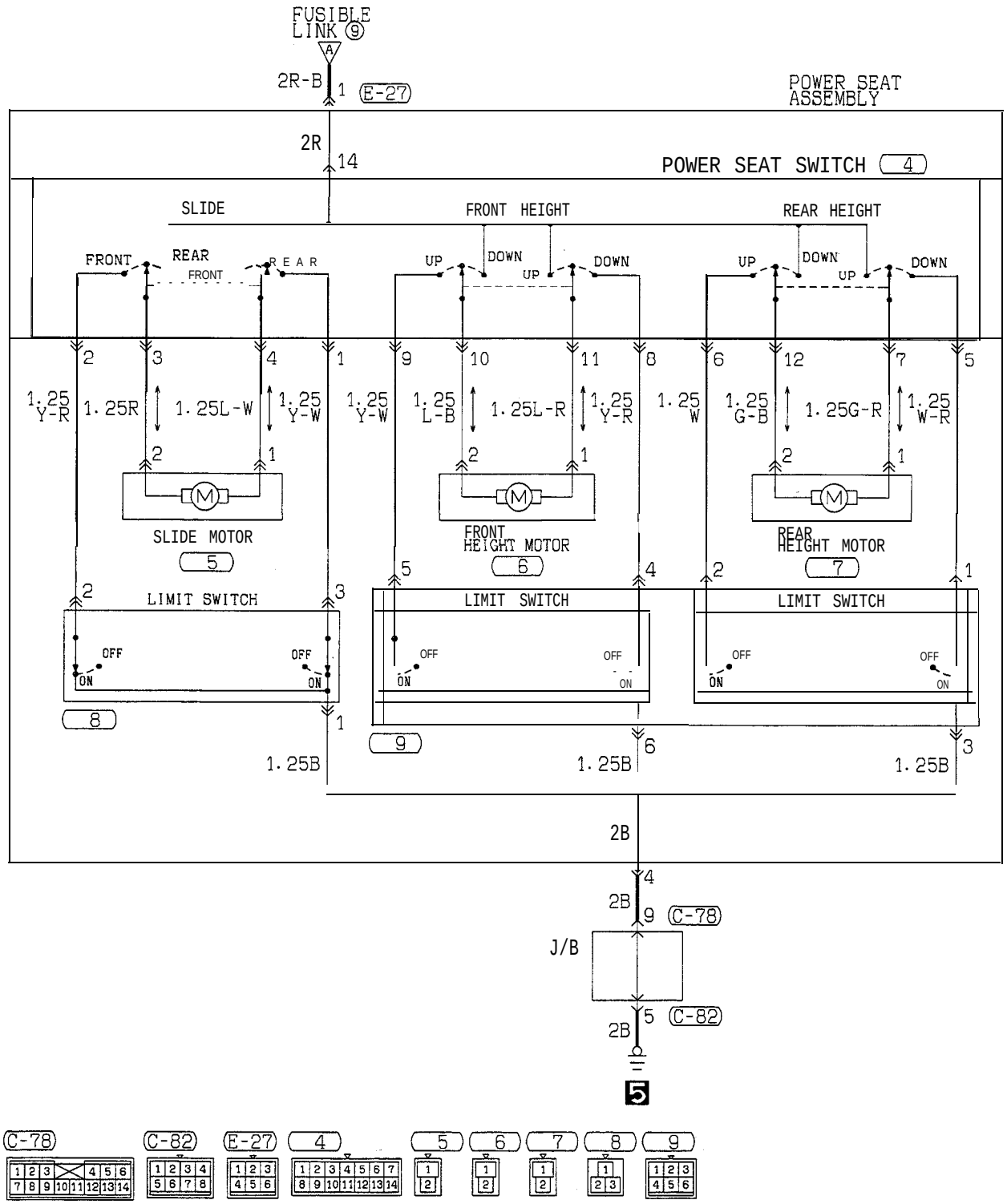

HR15M26AB

TSB Revision

POWER SEAT CIRCUIT (1994, 1995 MODELS)

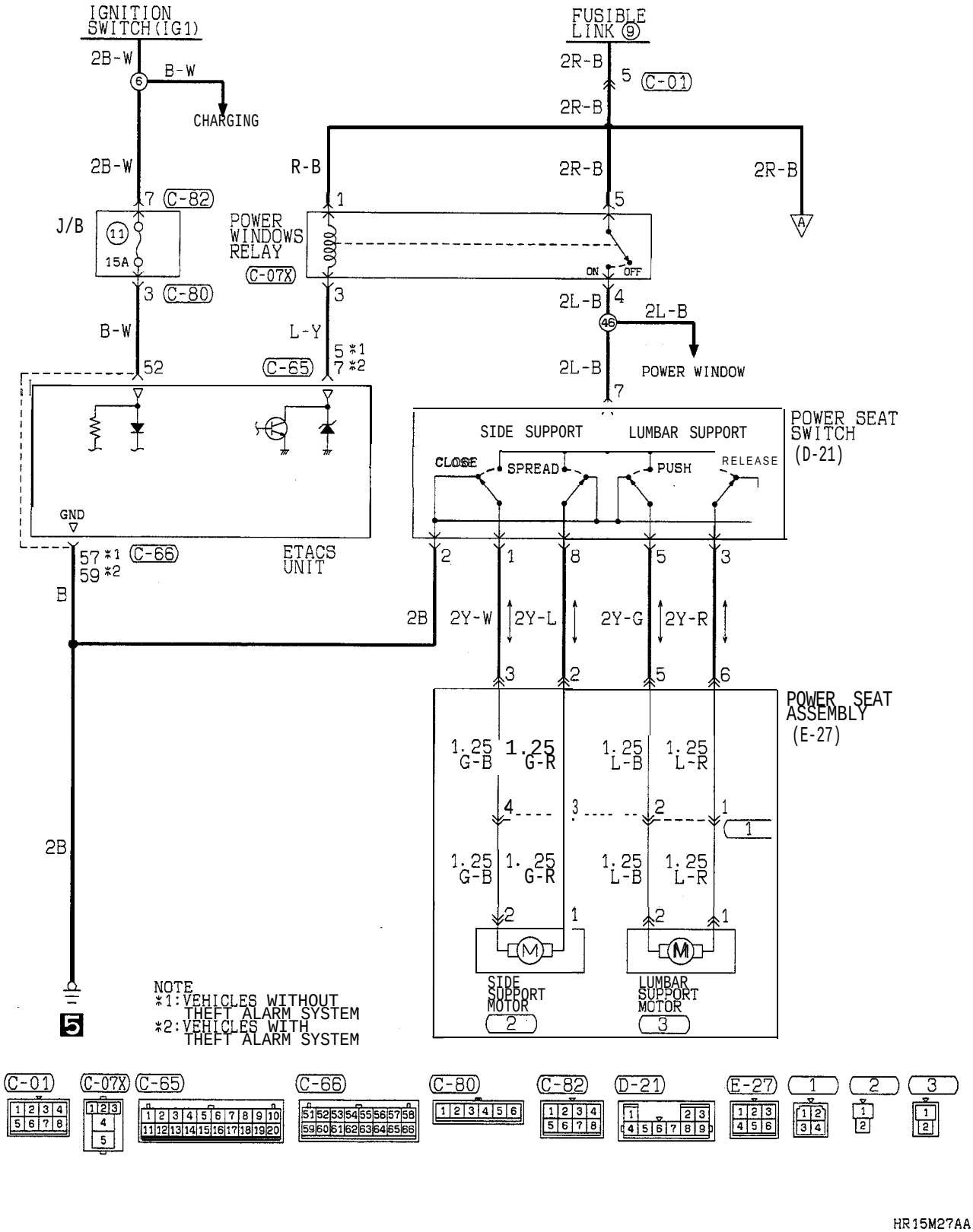

HR15M27AA

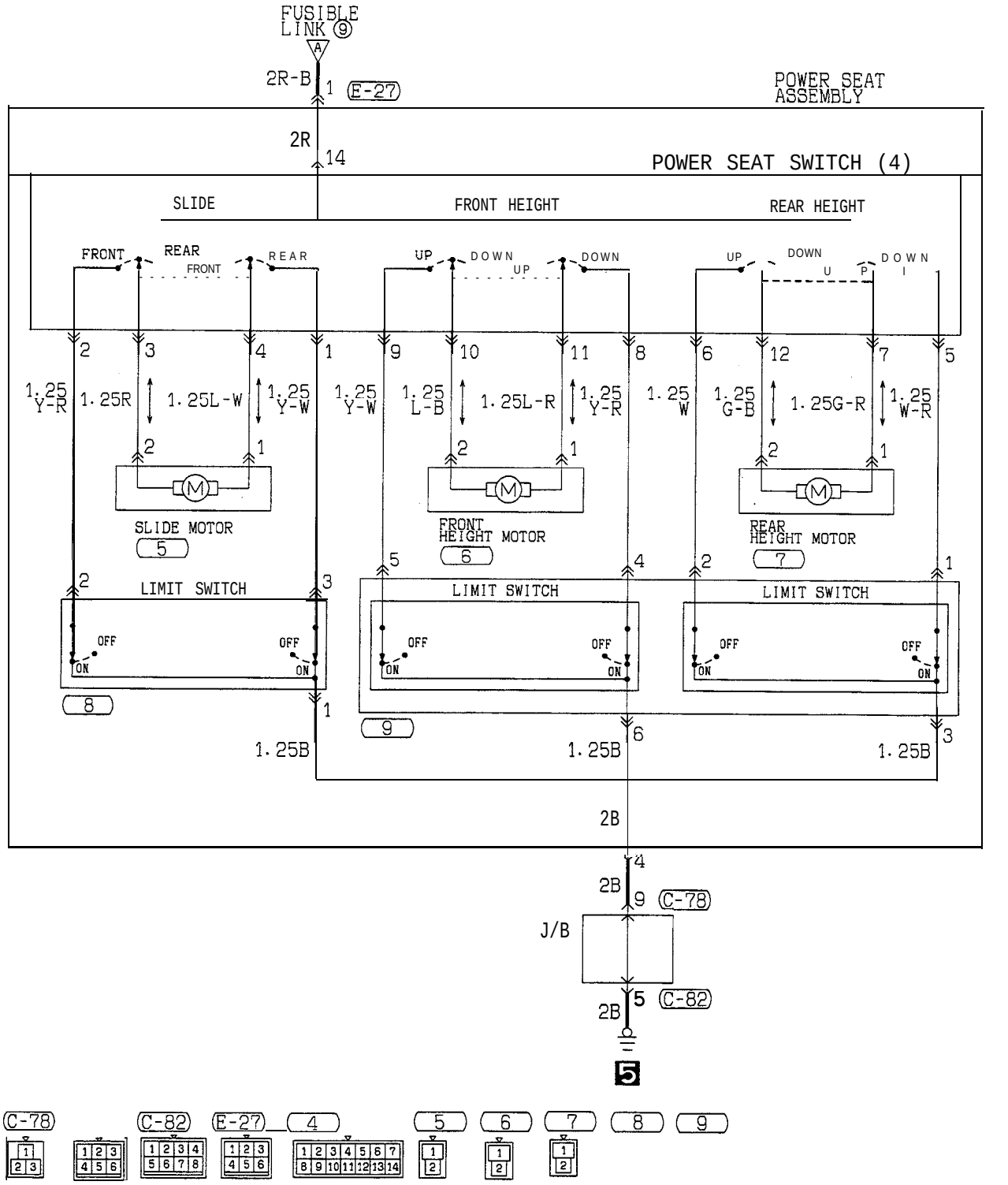
FUSIBLE LINK 9
A
2R-B
1
E-27
POWER SEAT ASSEMBLY
2R
14
POWER SEAT SWITCH (4)
SLIDE
FRONT HEIGHT
REAR HEIGHT
FRONT
REAR
FRONT
REAR
UP
DOWN
UP
DOWN
UP
DOWN
U
P
DOWN
I
2
3
4
1
9
10
11
8
6
12
7
5
1.25 Y-R
1.25R
1.25L-W
1.25 Y-W
1.25 Y-W
1.25 L-B
1.25L-R
1.25 Y-R
1.25 W
1.25 G-B
1.25G-R
1.25 W-R
SLIDE MOTOR
5
FRONT HEIGHT MOTOR
6
REAR HEIGHT MOTOR
7
LIMIT SWITCH
OFF
ON
8
9
1.25B
1.25B
1.25B
2B
2B
9
C-78
J/B
2B
5
C-82
5

C-78
C-82
E-27
4
5
6
7
8
9

HR15M27AB

POWER SEAT CIRCUIT (FROM 1996 MODELS)

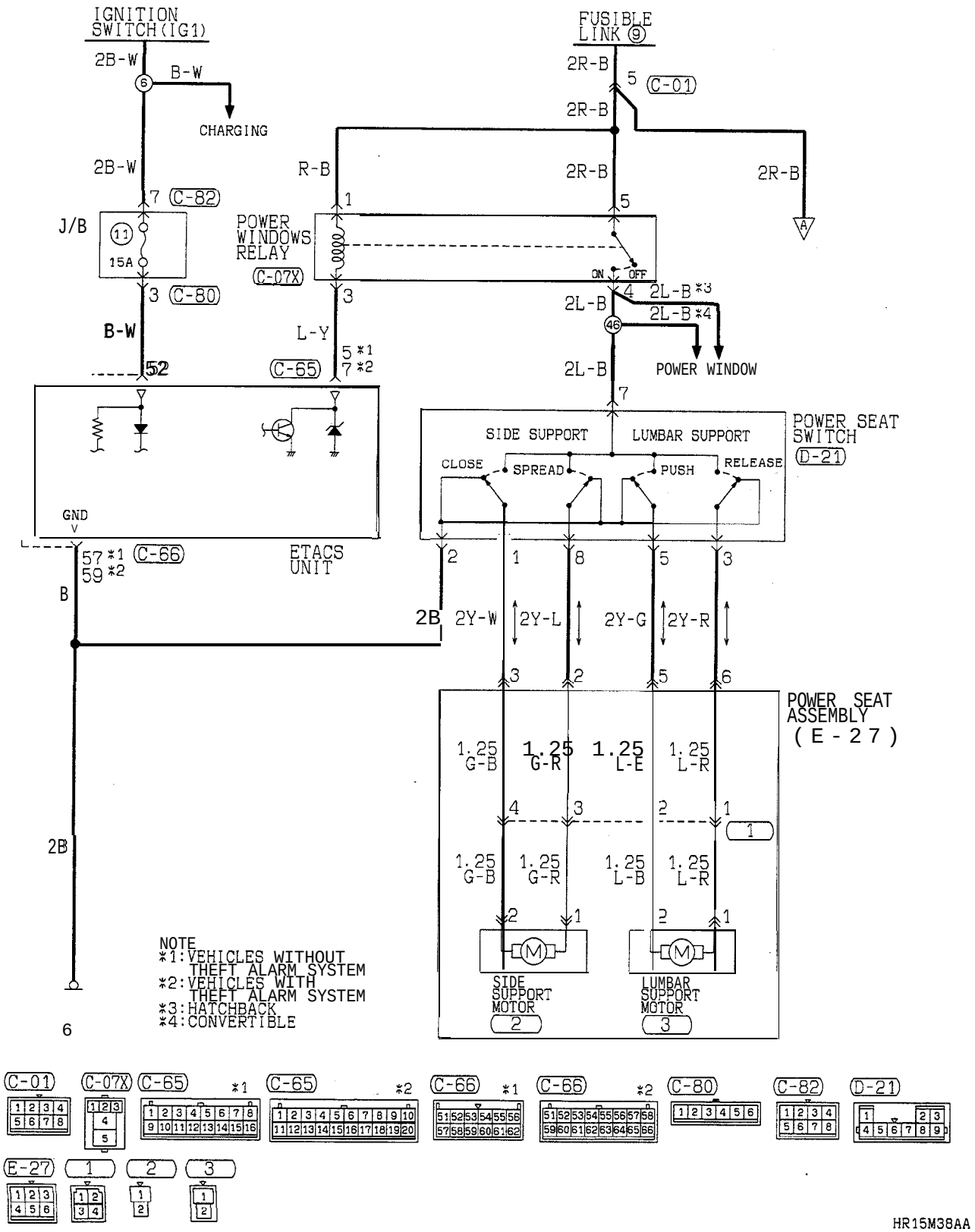

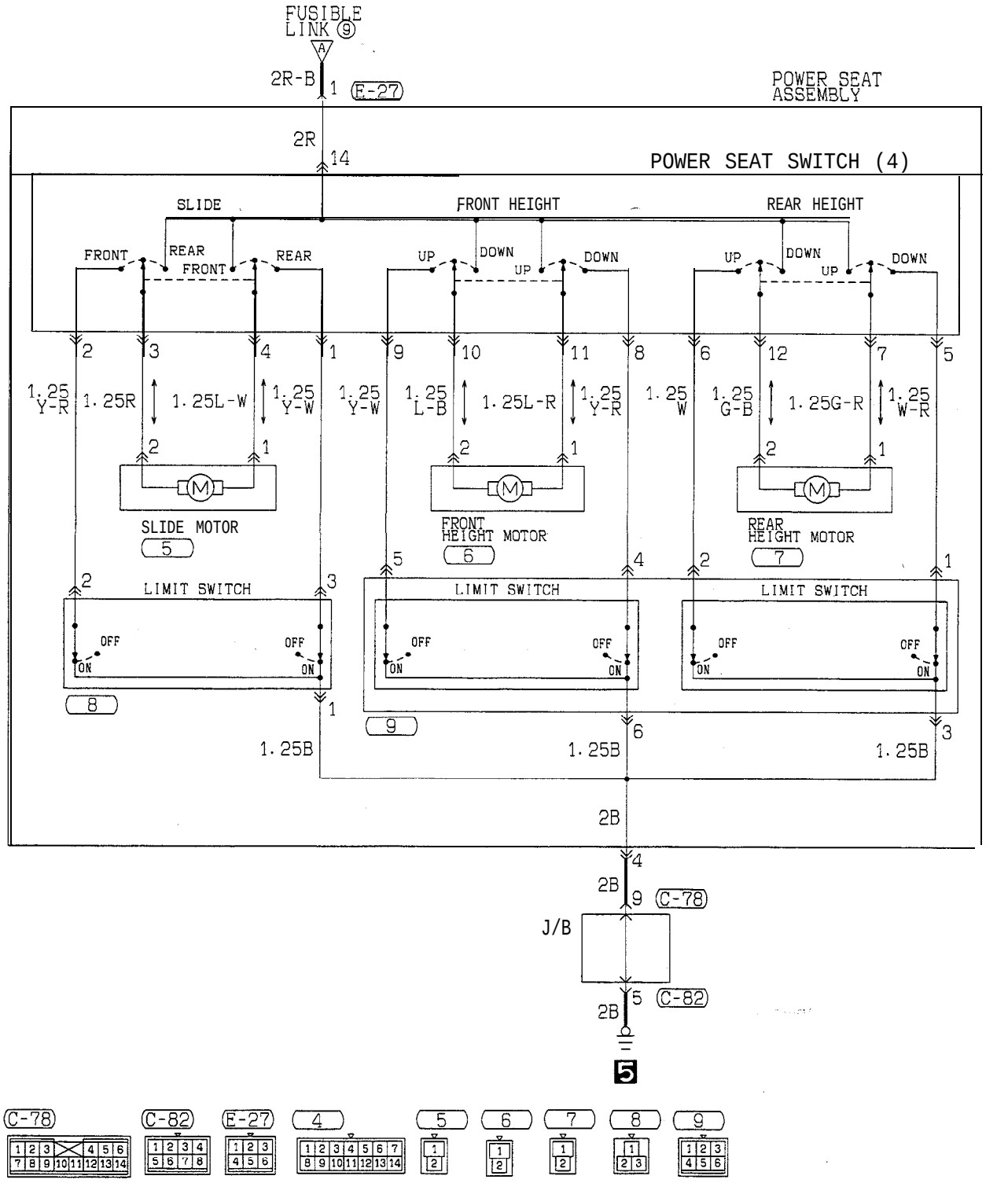
FUSIBLE LINK 9
A
2R-B
1
E-27
POWER SEAT ASSEMBLY
2R
14
POWER SEAT SWITCH (4)
SLIDE
FRONT HEIGHT
REAR HEIGHT
FRONT
REAR
FRONT
REAR
UP
DOWN
UP
DOWN
UP
DOWN
UP
DOWN
1.25 Y-R
1.25R
1.25L-W
1.25 Y-W
1.25 Y-W
1.25 L-B
1.25L-R
1.25 Y-R
1.25 W
1.25 G-B
1.25G-R
1.25 W-R
SLIDE MOTOR
5
FRONT HEIGHT MOTOR
6
REAR HEIGHT MOTOR
7
LIMIT SWITCH
OFF
ON
8
9
1.25B
1.25B
1.25B
2B
2B
9
C-78
J/B
2B
5
C-82
5
C-78
C-82
E-27
4
5
6
7
8
9

HR15M38AB

COMPONENT LOCATION

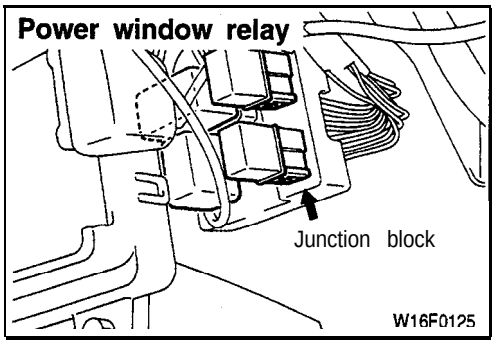

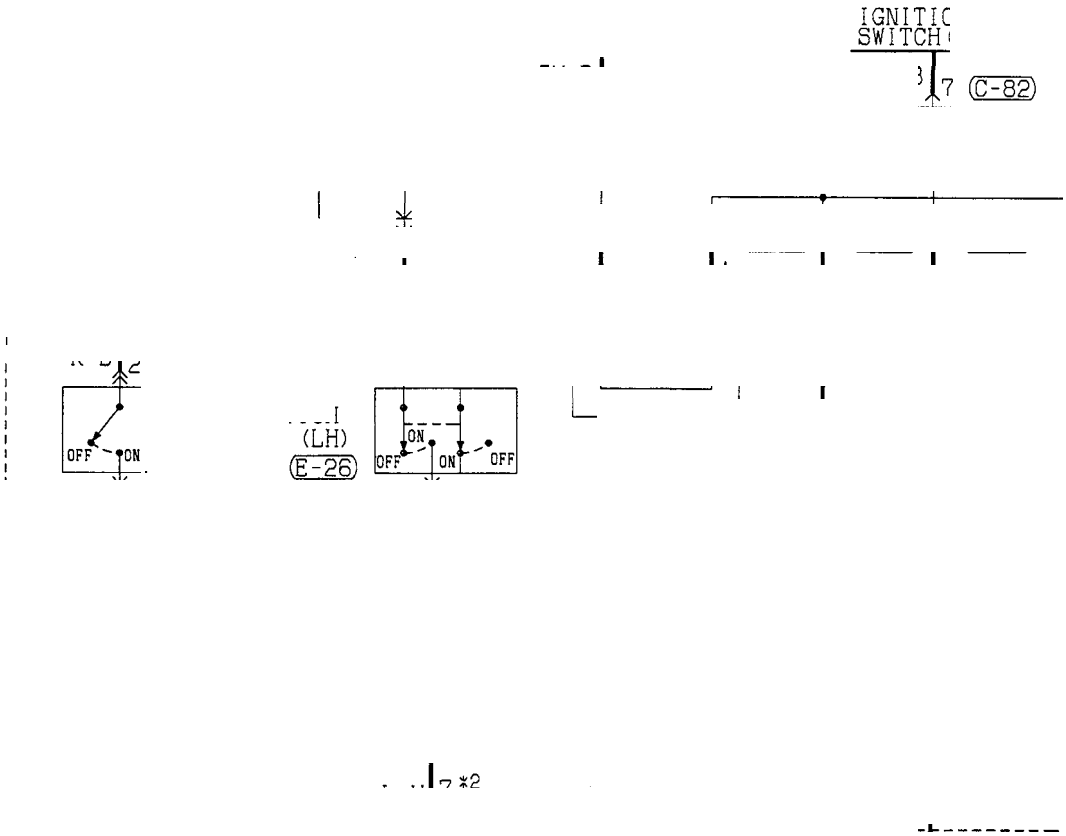
IGNITIC
SWITCH
C-82
OFF
ON
(LH)
E-26
ON
OFF
ON
OFF

TENSION-REDUCER TYPE SEAT BELT CIRCUIT (FROM 1995 MODELS)

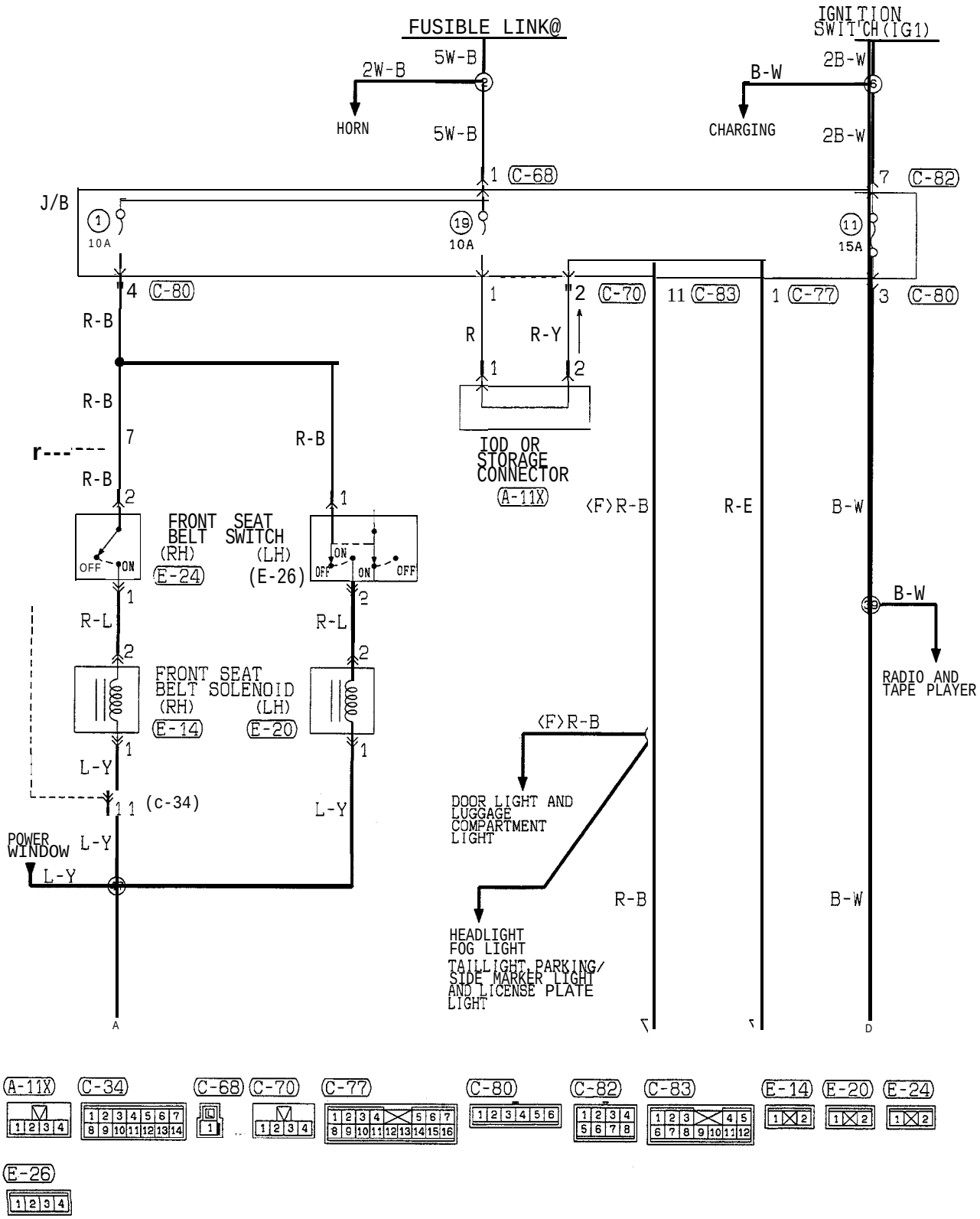

TSB Revision

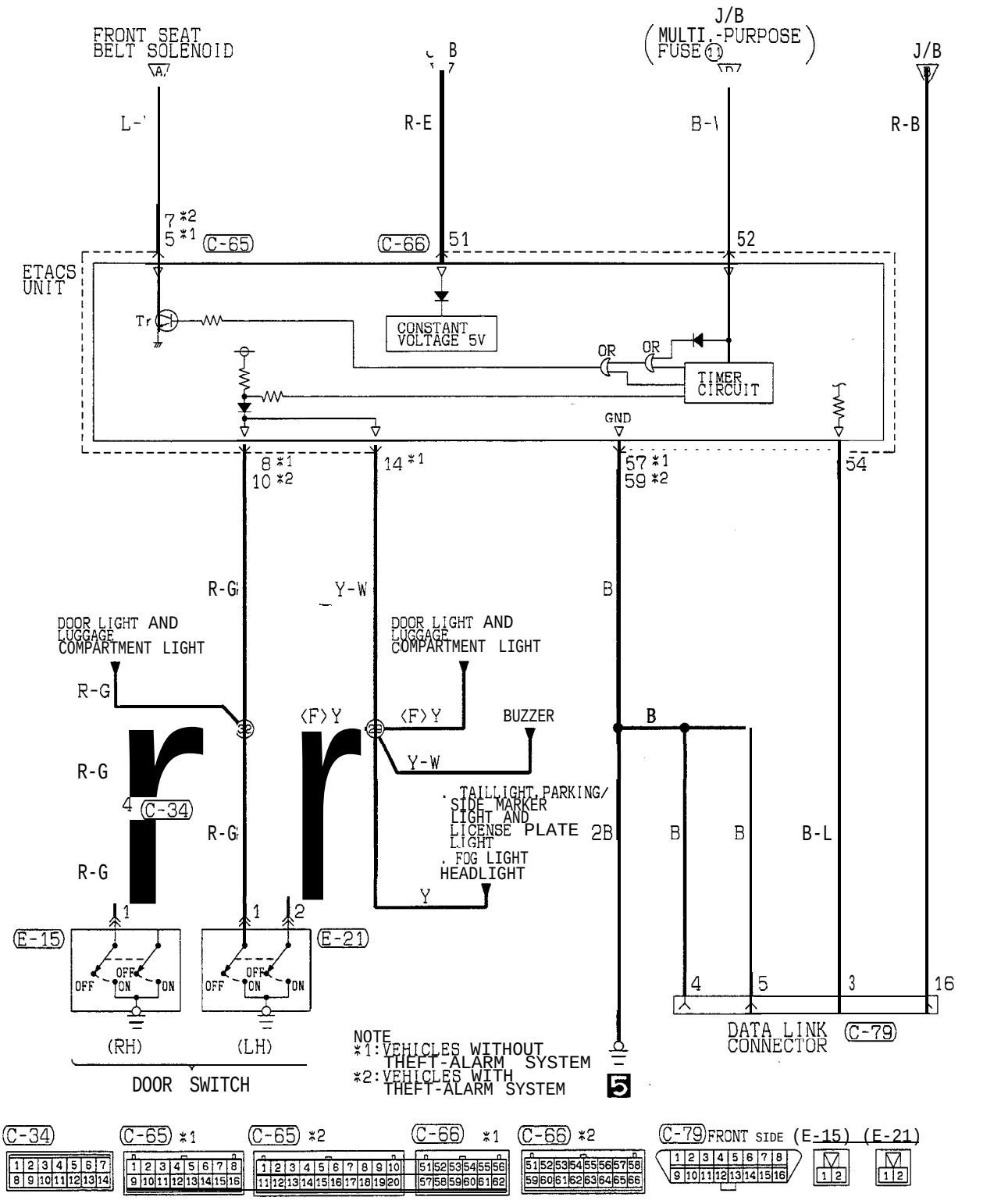

TSB Revision

COMPONENT LOCATION

Name	Symbol	Name	Symbol
Data link connector (from 1994 models)	C	ETACS unit	A
Data link connector (up to 1993 models)	B	Front seat belt solenoid	D

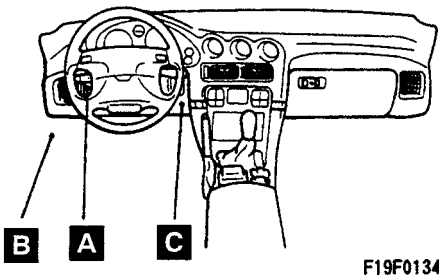

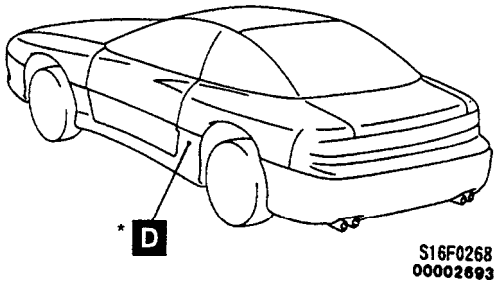

Note: * indicates that this component is used on the right side as well.

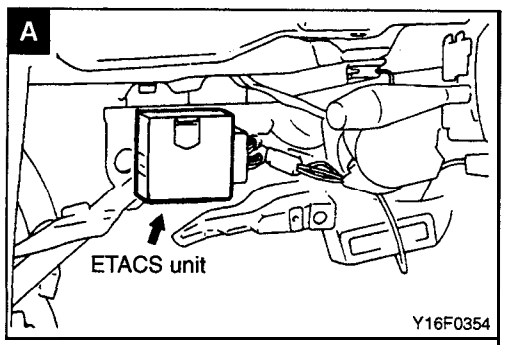

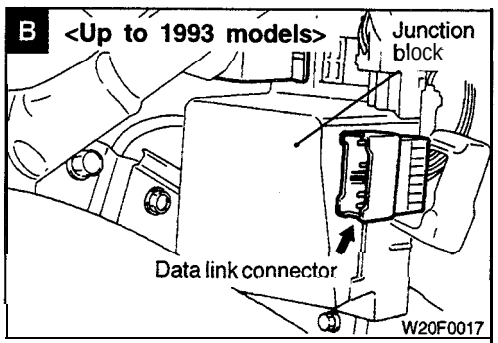

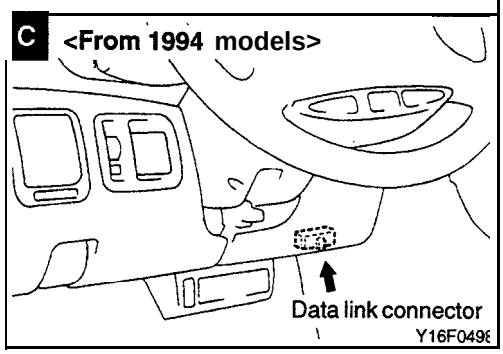

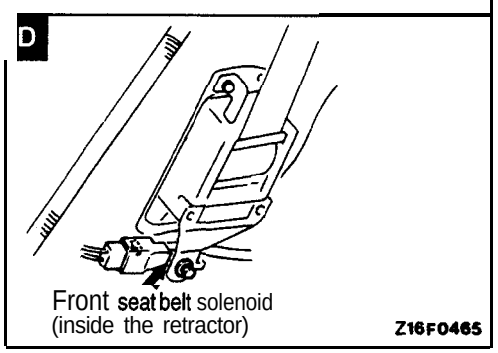

OPERATION

- If the driver fastens the seat belt with the ignition switch placed in the “ON” position, the seat belt switch in the seat belt buckle is turned “ON” to operate the seat belt solenoid in the retractor.
- This will reduce the seat belt rewinding torqe to minimize a sense of oppression given by the belt.
- Owing to the timer function of the ETACS unit, the seat belt solenoid is kept in operation for 30 seconds after turning off the ignition switch, with due consideration to elimination of the sudden rise in a sense of oppression caused by the belt immediately after the ignition switch is turned off.

TROUBLESHOOTING HINTS

Phenomenon	Inspection method
Some of the tension-reducers do not operates.	• Check dedicated fuse No. 1 and 19. • Check the inoperative seat belt switch. • Check the inoperative seat belt solenoid.
The tension-reducer does not operate with the ignition switch placed in the ON position.	• Check the ignition switch input signal. • Check the ignition switch. (Refer to GROUP 54–Ignition switch.)
The tension-reducer is in operation immediately after the ignition switch is turned off, but it does not stop operation even if the door is opened within 30 seconds from the turning-off the ignition switch.	• Check the door switch input signal. • Check the door switch. (Refer to GROUP 42–Door Assembly.)

ACTIVE AERO CIRCUIT (UP TO 1993 MODELS)

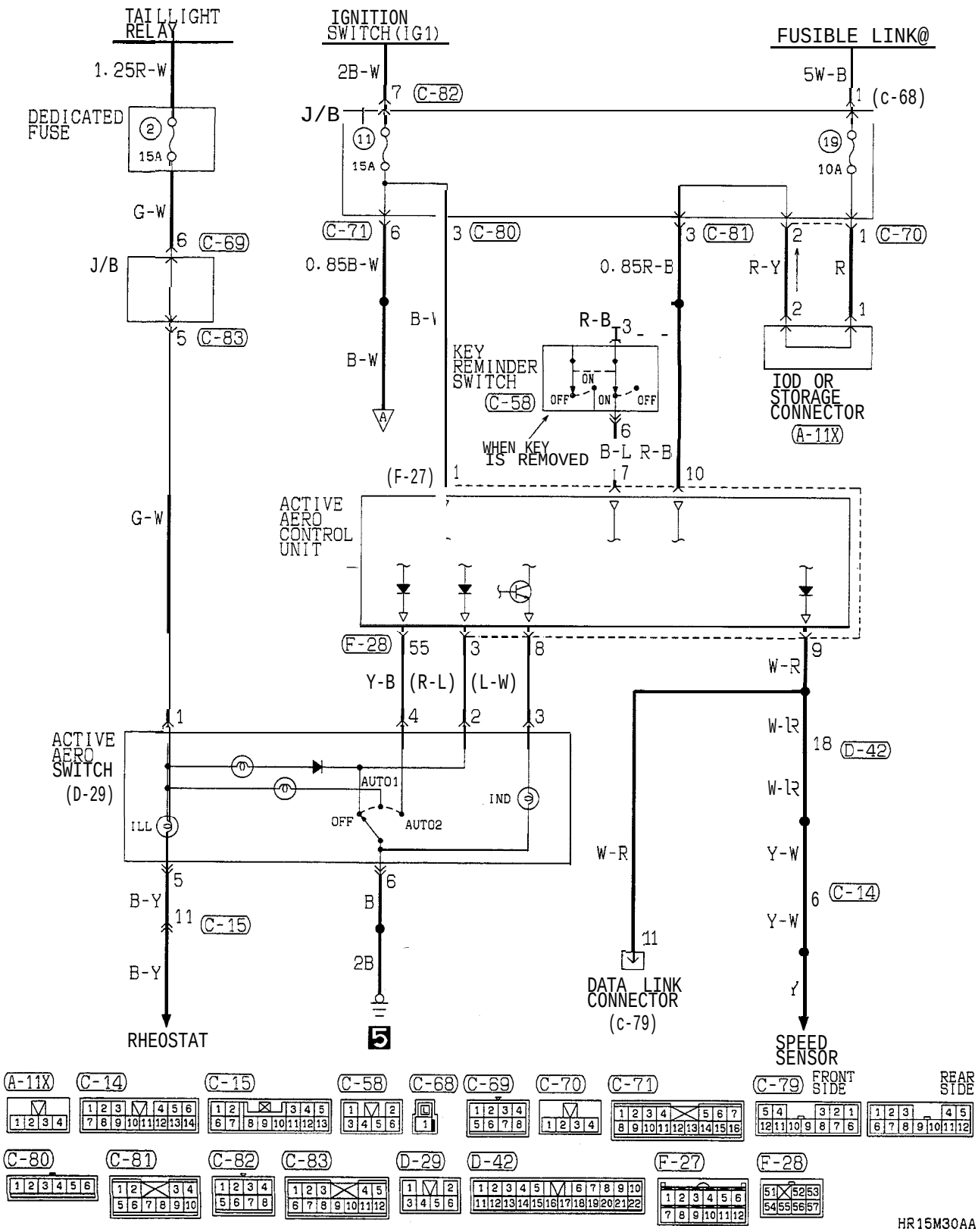

TSB Revision

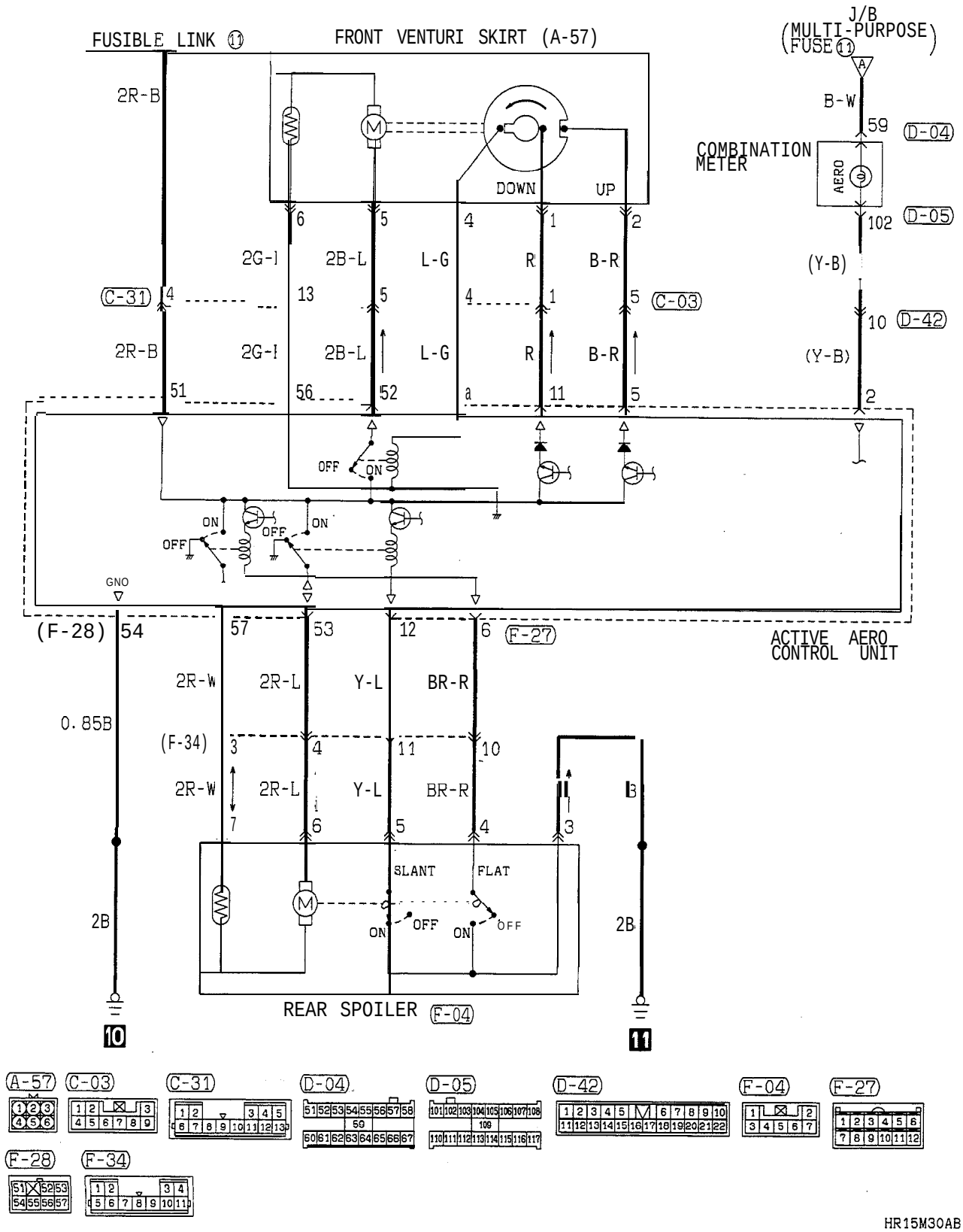
FUSIBLE LINK 11
FRONT VENTURI SKIRT (A-57)
J/B (MULTI-PURPOSE FUSE 11)
COMBINATION METER
AERO
DOWN
UP
2R-B
B-W
59
D-04
102
D-05
(Y-B)
10
D-42
2G-I
2B-L
L-G
R
B-R
C-31
C-03
13
51
56
52
11
OFF
ON
GNO
(F-28)
54
57
53
12
6
F-27
ACTIVE AERO CONTROL UNIT
2R-W
2R-L
Y-L
BR-R
0.85B
(F-34)
3
4
11
10
7
5
SLANT
FLAT
2B
REAR SPOILER F-04
10
11
A-57
C-03
C-31
D-04
D-05
D-42
F-04
F-27
F-28
F-34
HR15M30AB

ACTIVE AERO CIRCUIT (FROM 1994 MODELS)

<HATCHBACK>

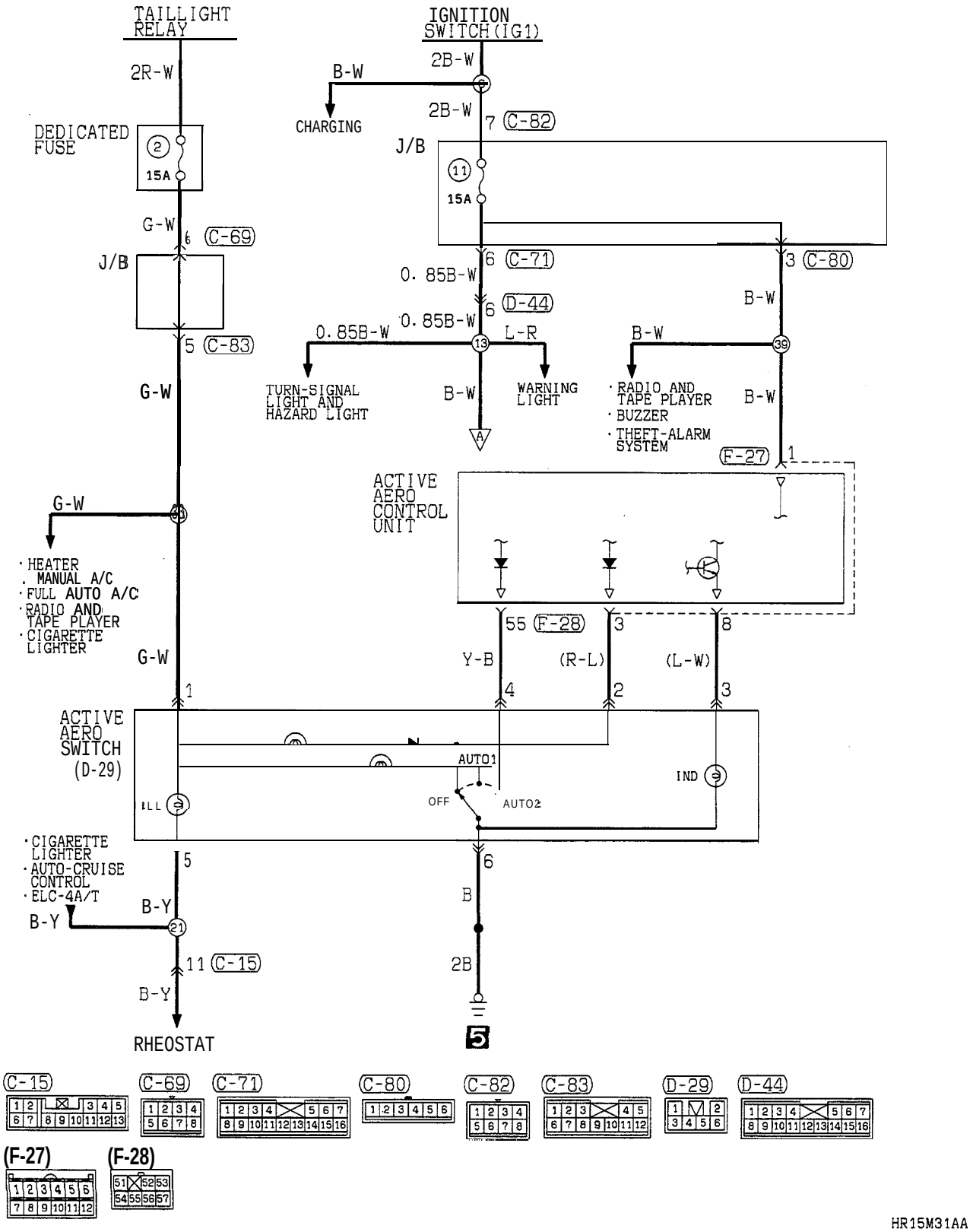

TSB Revision

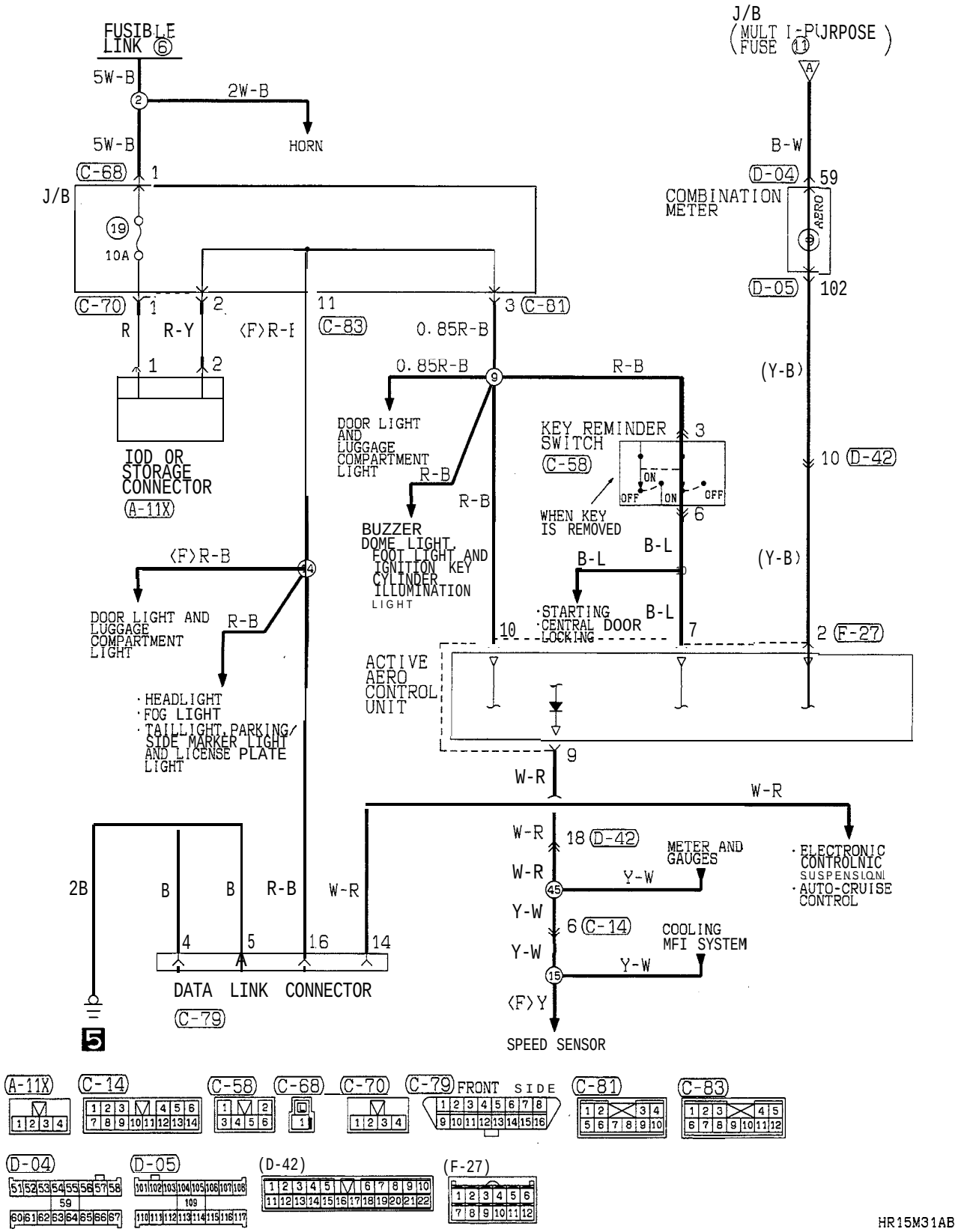
FUSIBLE LINK 6
5W-B
2W-B
HORN
5W-B
C-68
J/B
19
10A
C-70
R
R-Y
(F)R-B
C-83
0.85R-B
C-81
IOD OR STORAGE CONNECTOR
A-11X
DOOR LIGHT AND LUGGAGE COMPARTMENT LIGHT
R-B
BUZZER
DOME LIGHT, FOOT LIGHT, AND IGNITION KEY CYLINDER ILLUMINATION LIGHT
KEY REMINDER SWITCH
C-58
ON
OFF
WHEN KEY IS REMOVED
B-L
·STARTING
·CENTRAL DOOR LOCKING
(F)R-B
DOOR LIGHT AND LUGGAGE COMPARTMENT LIGHT
·HEADLIGHT
·FOG LIGHT
·TAILLIGHT, PARKING/ SIDE MARKER LIGHT AND LICENSE PLATE LIGHT
ACTIVE AERO CONTROL UNIT
J/B (MULTI-PURPOSE FUSE 11)
B-W
D-04
COMBINATION METER
AERO
D-05
102
(Y-B)
D-42
F-27
W-R
18 D-42
METER AND GAUGES
Y-W
·ELECTRONIC CONTROL SUSPENSION
·AUTO-CRUISE CONTROL
6 C-14
COOLING MFI SYSTEM
(F)Y
SPEED SENSOR
2B
B
R-B
W-R
DATA LINK CONNECTOR
C-79
5
A-11X
C-14
C-58
C-68
C-70
C-79 FRONT SIDE
C-81
C-83
D-04
D-05
D-42
F-27
HR15M31AB

ACTIVE AERO CIRCUIT (FROM 1994 MODELS) (CONTINUED)

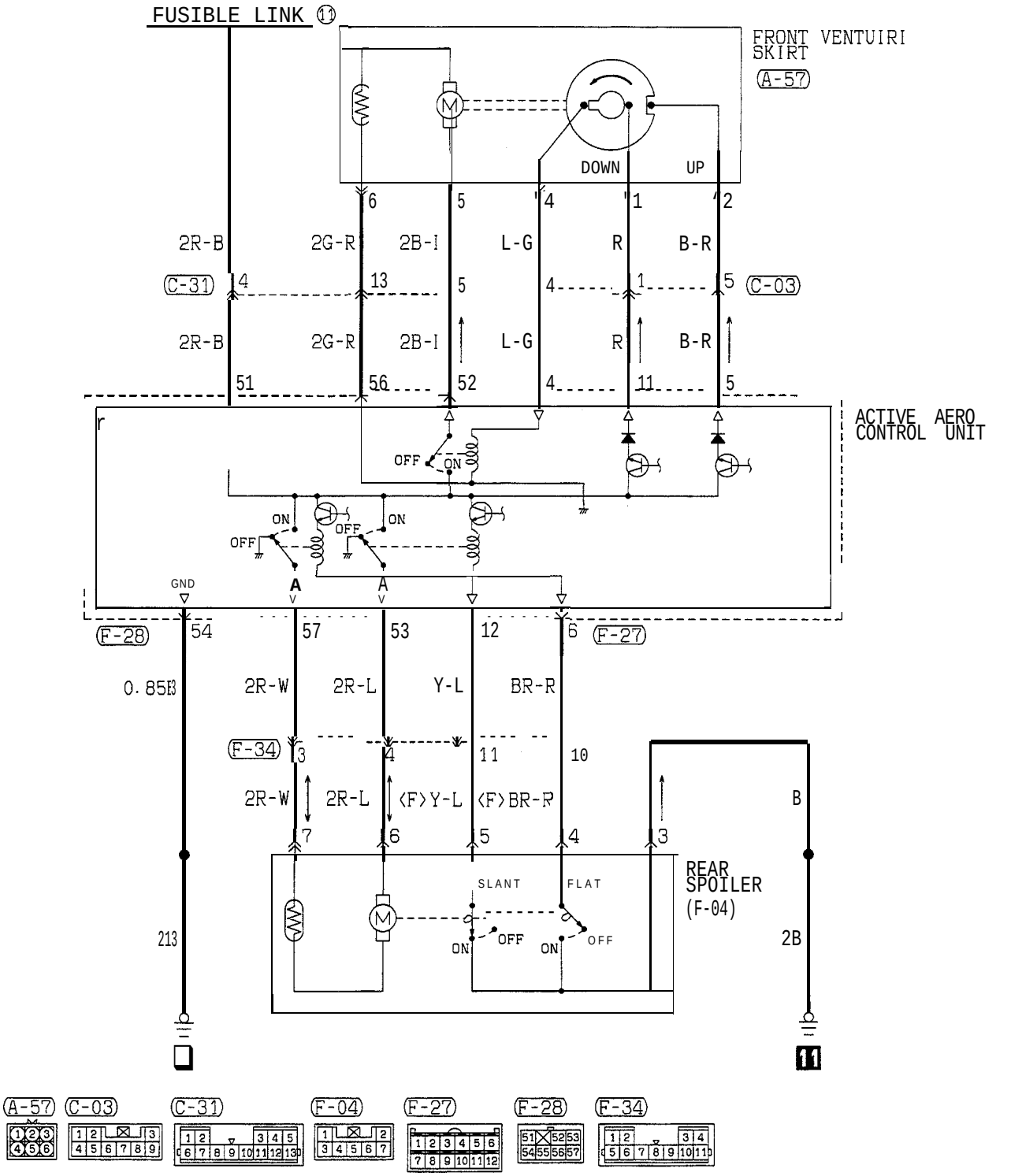

HR15M31BA

TSB Revision

COMPONENT LOCATION

Name	Symbol	Name	Symbol
Active aero control unit	E	Data link connector (from 1994 models)	B
Active aero front venturi skirt	C	Data link connector (up to 1993 models)	A
Active aero rear spoiler	D		

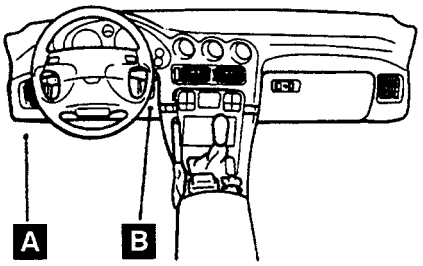

E19F0134

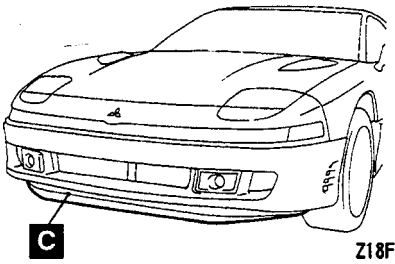

Z18F0325

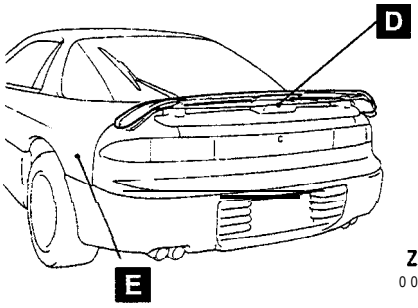

Z18F0233
00002694

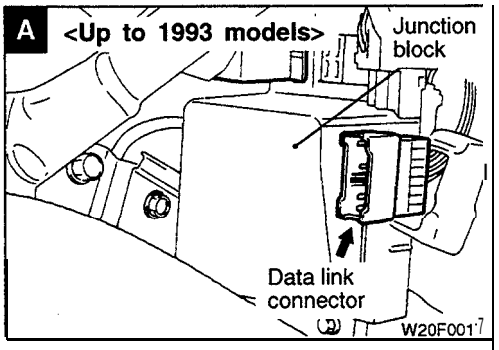

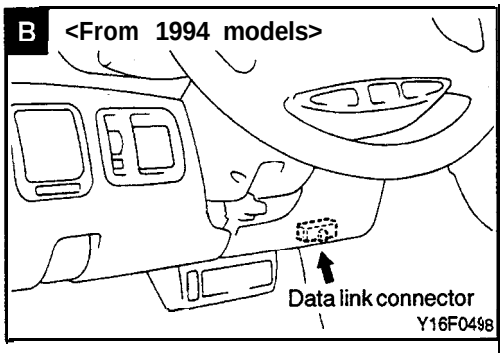

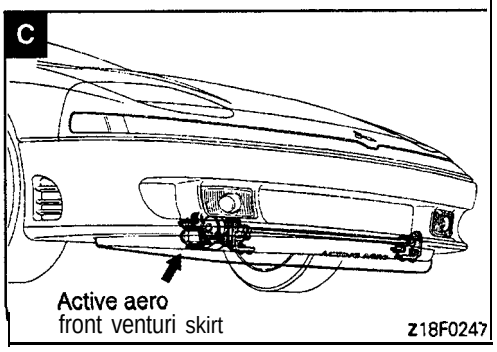

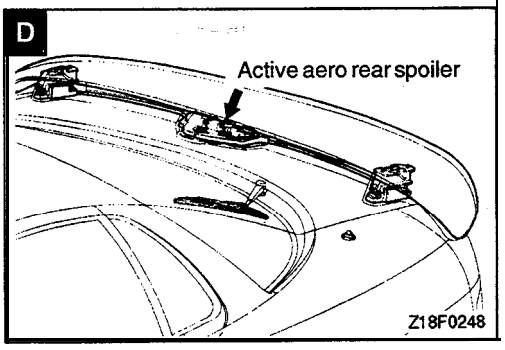

TSB Revision

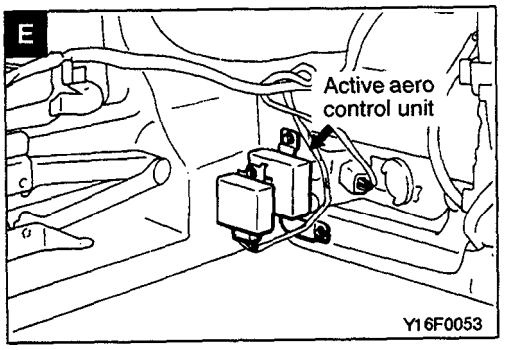
E
Active aero
control unit
Y16F0053

CAR TELEPHONE CIRCUIT (1992 MODEL)

(VEHICLES HARNESS WITHOUT TELEPHONE COMPONENT)

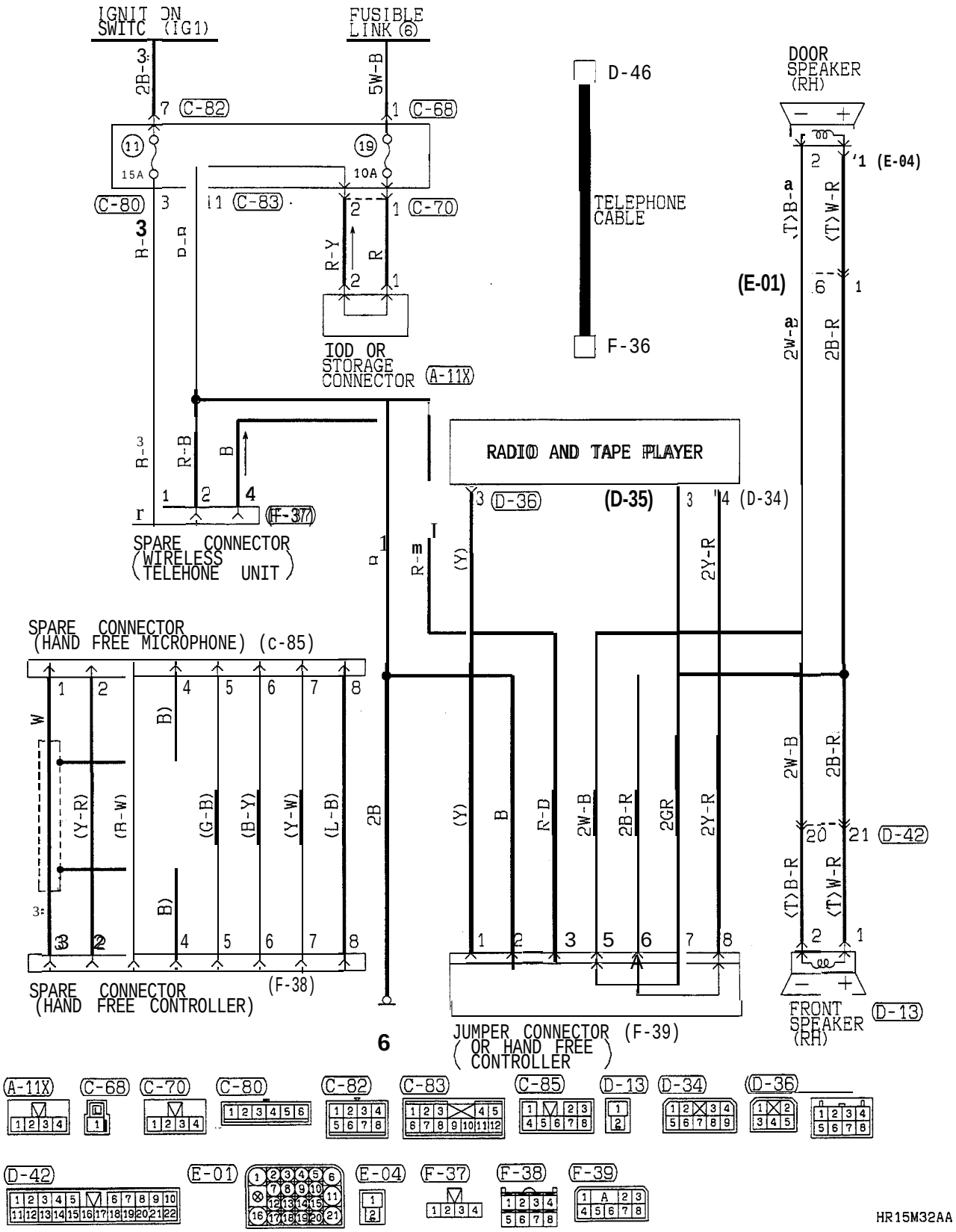

TSB Revision

CAR TELEPHONE CIRCUIT (1993 Models)

(VEHICLES HARNESS WITHOUT TELEPHONE COMPONENT)

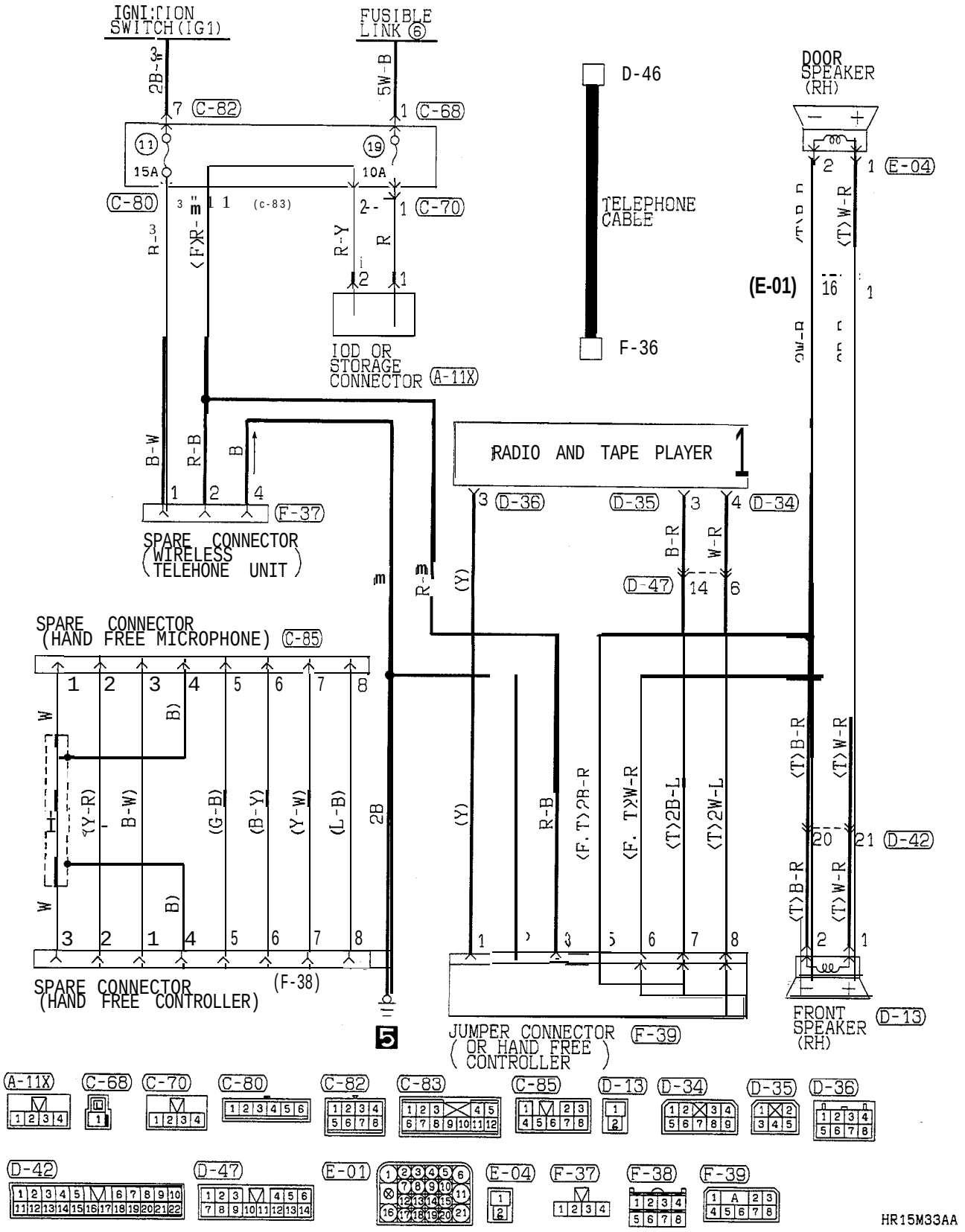

TSB Revision

NOTES

TOP STACK CIRCUIT (1995 MODELS)

<CONVERTIBLE>

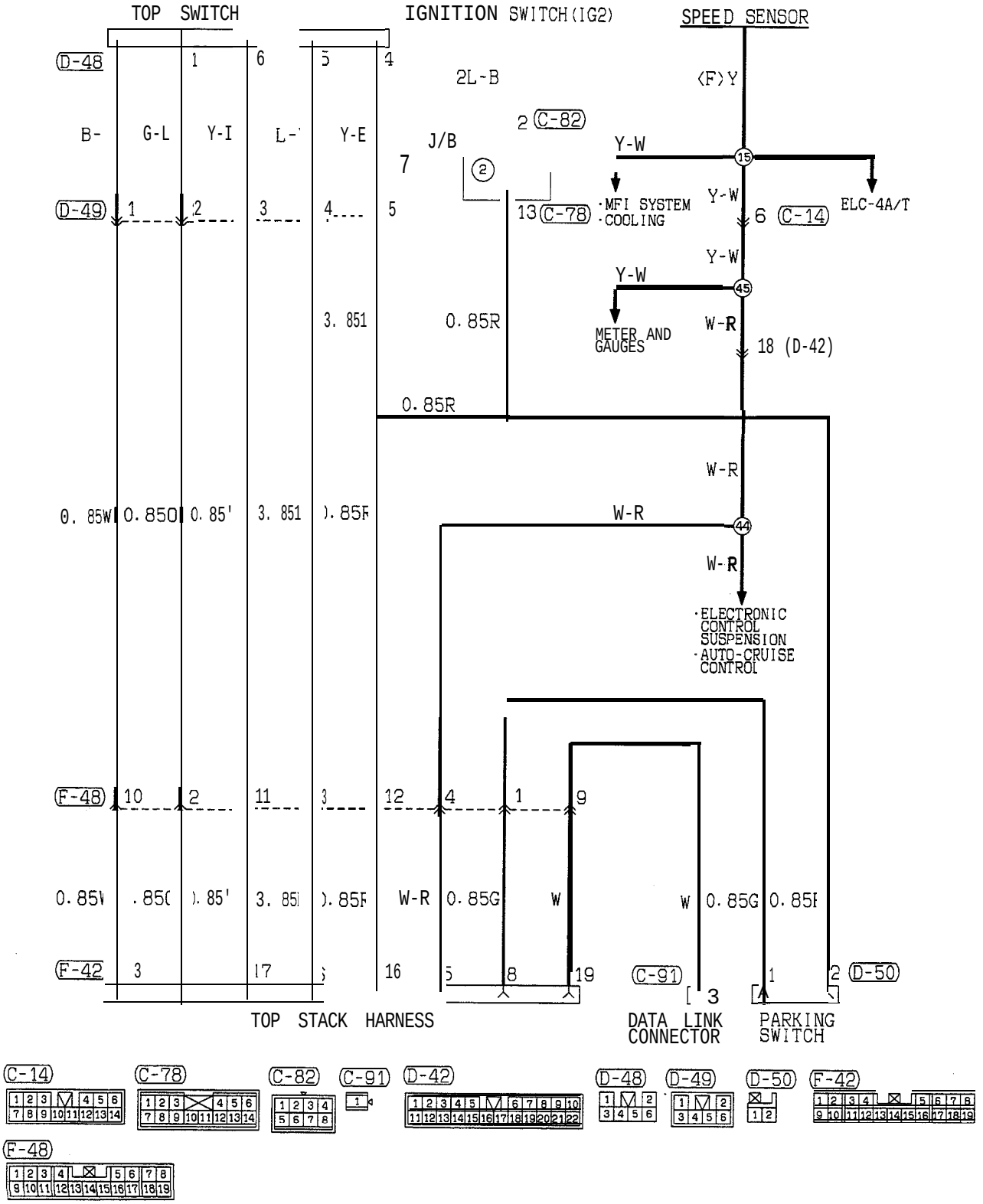

TSB Revision

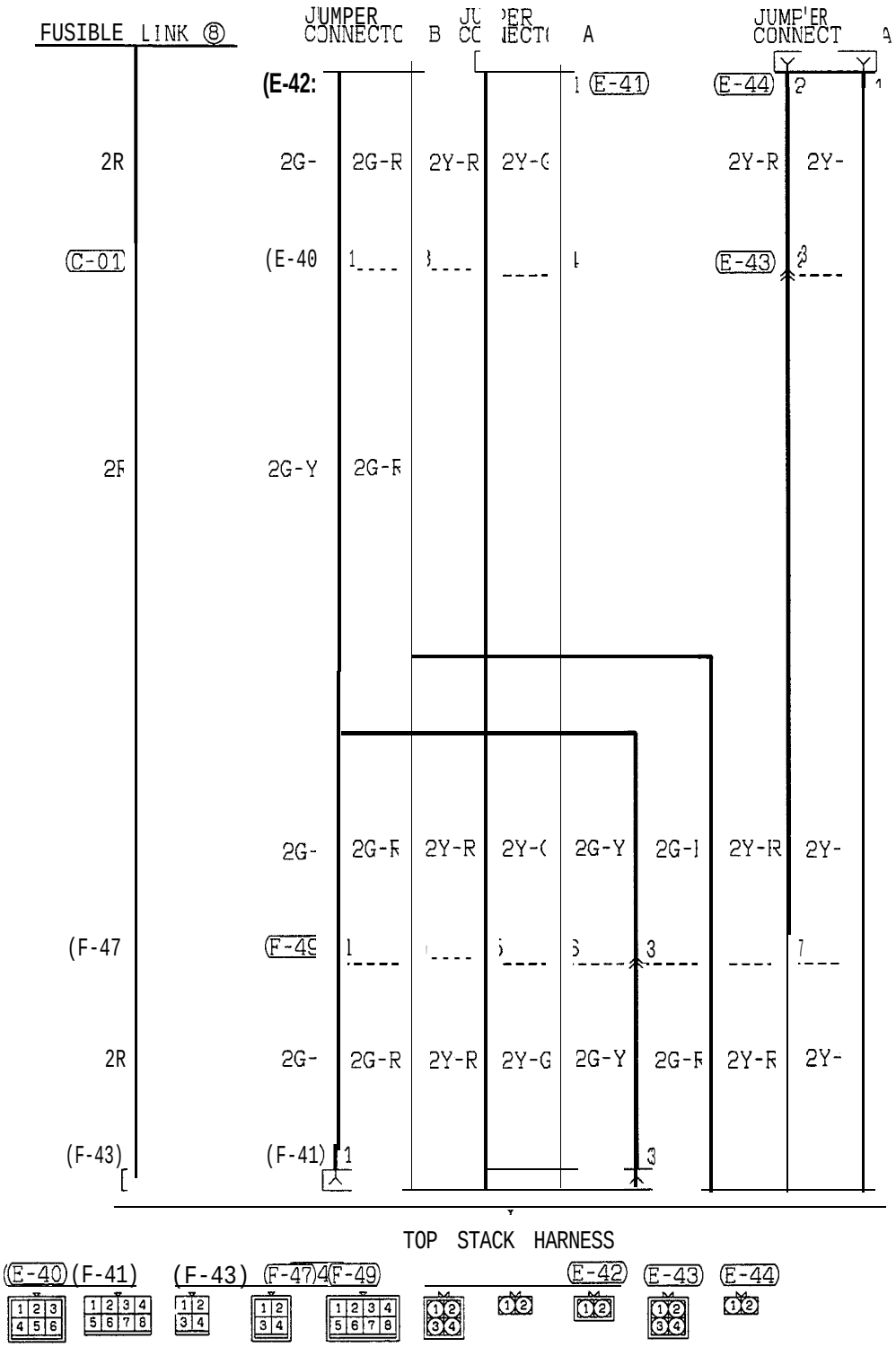

HR15M34AB

TSB Revision

TOP STACK CIRCUIT (FROM 1996 MODELS)

<CONVERTIBLE>

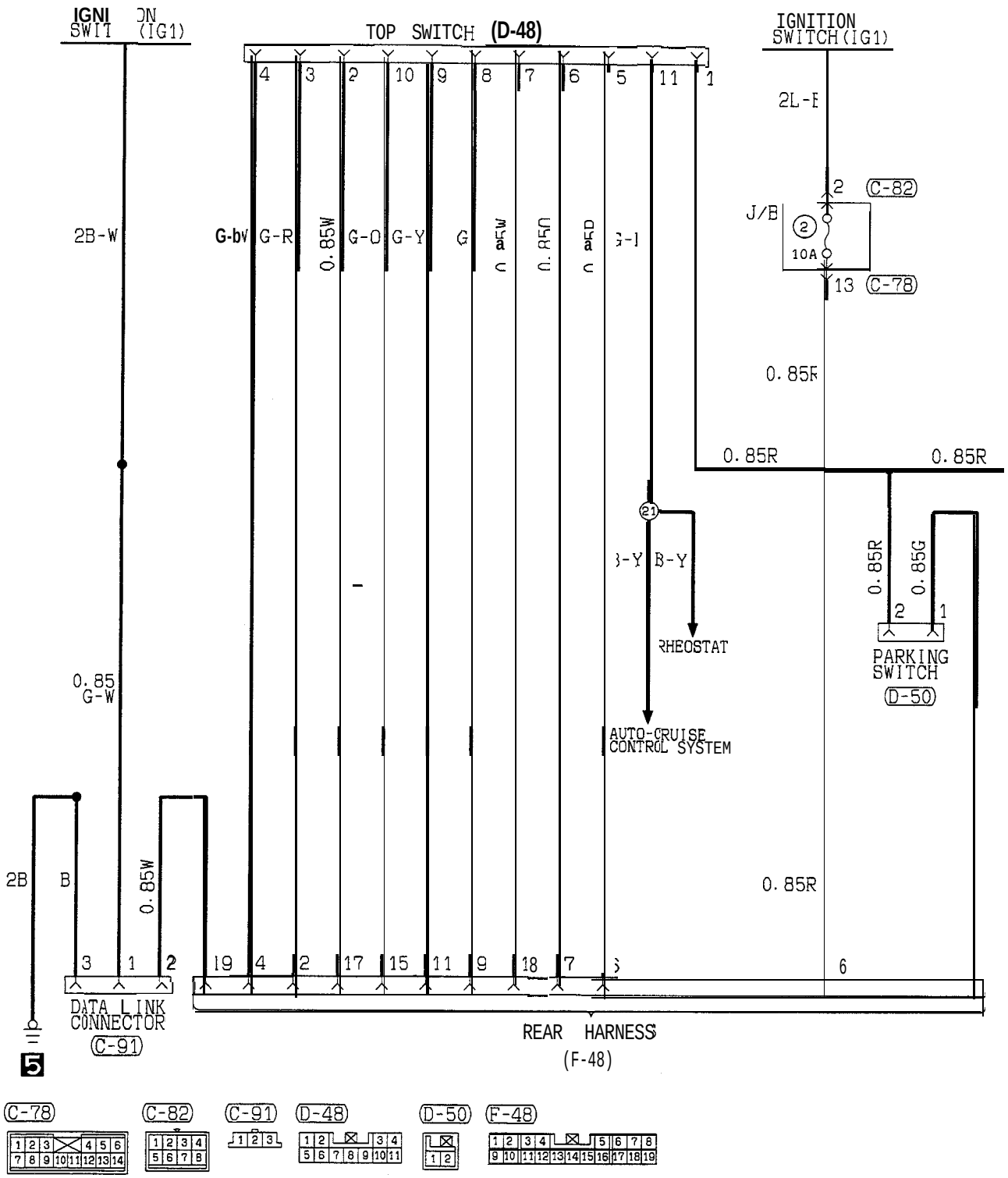

HR15M39AA

TSB Revision

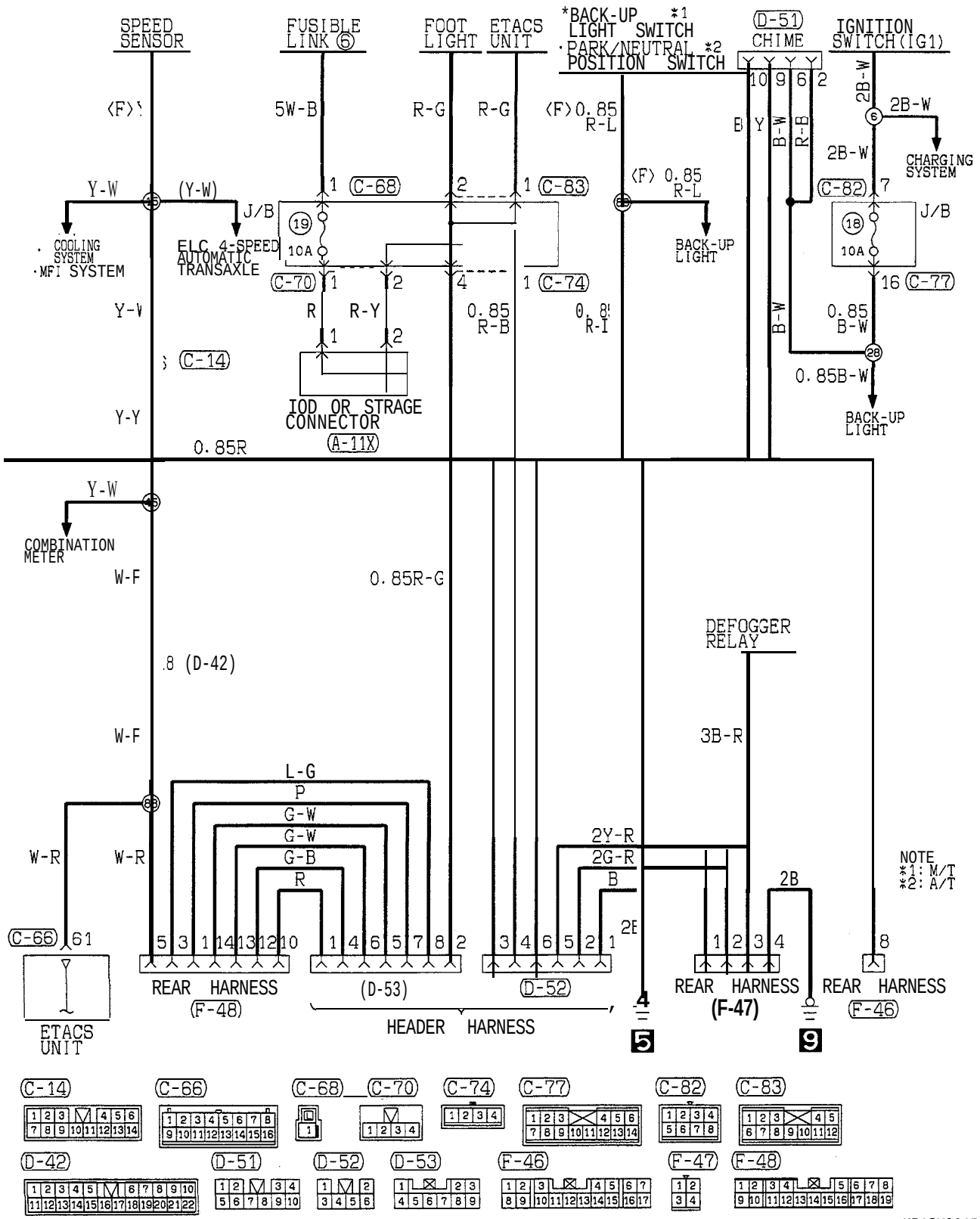

TSB Revision

SUNROOF CIRCUIT (FROM 1995 MODELS)

<HATCHBACK>

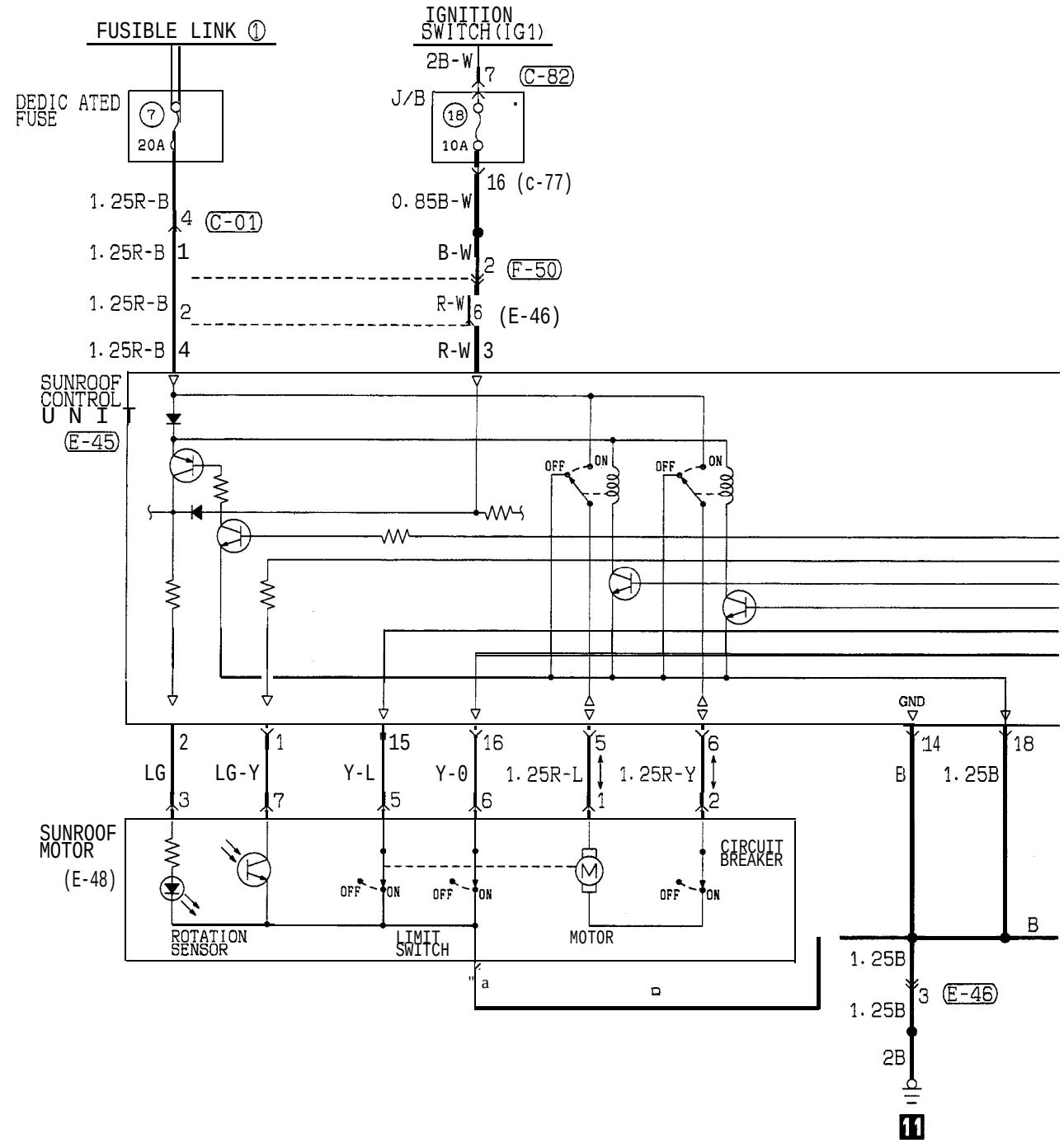

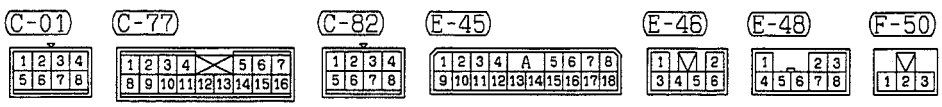

HR15M40AA

TSB Revision

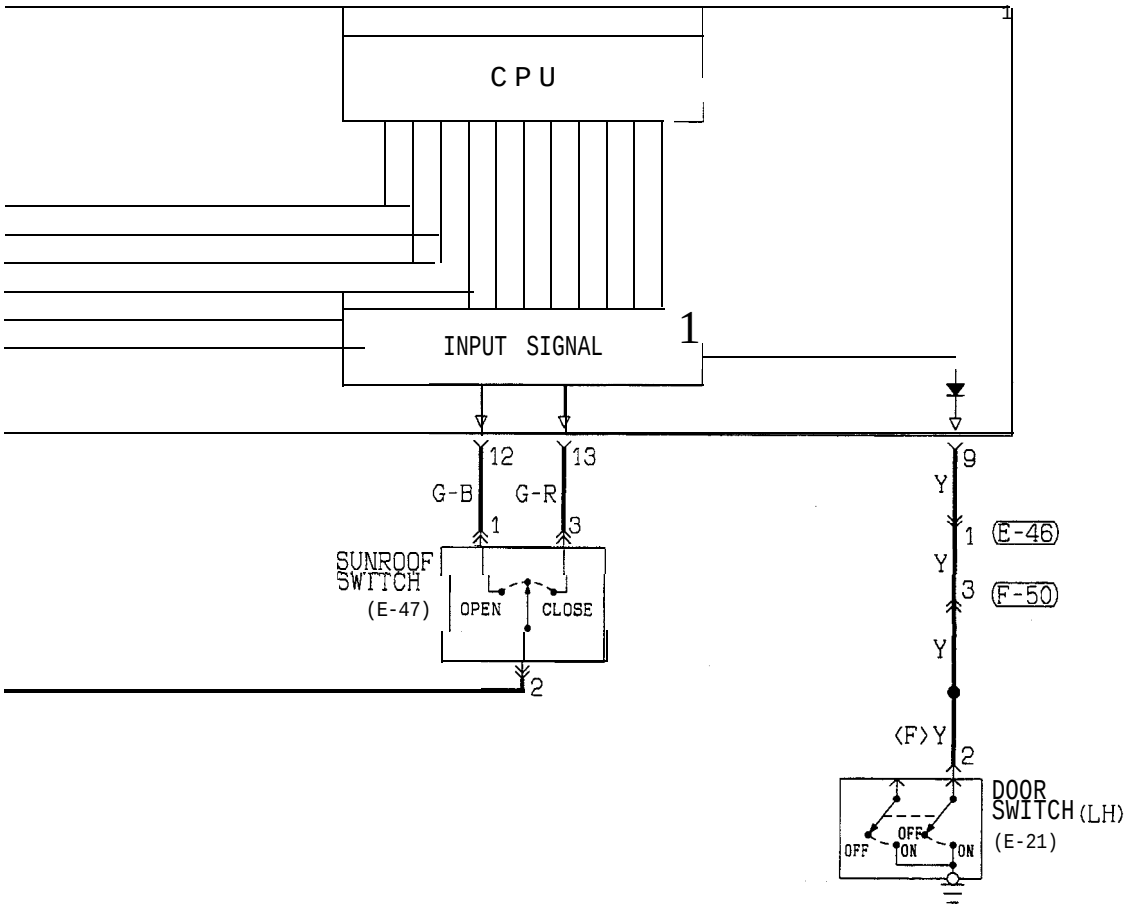
CPU
INPUT SIGNAL
1
12
13
G-B
G-R
1
3
SUNROOF SWITCH
(E-47)
OPEN
CLOSE
2
9
Y
1
(E-46)
Y
3
(F-50)
Y
(F) Y
2
DOOR SWITCH (LH)
(E-21)
OFF
ON
OFF
ON

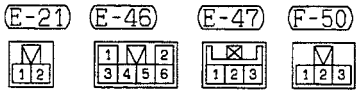
(E-21)
(E-46)
(E-47)
(F-50)

HR15M40AB

NOTES