FUEL

CONTENTS

MULTIPORT FUEL INJECTION (MFI) 14A

ELECTRONIC CONTROL TYPE CARBURETOR 14B

CONVENTIONAL TYPE CARBURETOR 14C

'VARIABLE VENTURI TYPE CARBURETOR 14D

DIESEL FUEL 14E

FUEL SUPPLY AND ENGINE CONTROL 14F

AUTO-CRUISE CONTROL SYSTEM 14G

TRACTION CONTROL SYSTEM 14H

NOTE
Shaded groups in the above list are not included in this manual.

MULTIPORT FUEL INJECTION

CONTENTS

GENERAL INFORMATION **3**
Multiport Fuel Injection (MFI) System Diagram 3
INJECTOR **260**
KNOCK SENSOR **265**
ON-VEHICLE INSPECTION OF MFI COMPONENTS <California – DOHC Non Turbo, Turbo> **170**
Active Exhaust Control Unit <Turbo> 245
Air Conditioning Switch and Compressor Clutch Relay 209
Anti-lock Braking Signal <Turbo> 247
Barometric Pressure Sensor 188
Boost Meter <Turbo> 243
Camshaft Position Sensor 196
Closed Throttle Position Switch 194
Components Inspection Procedure 174
Component Location 170
Crankshaft Position Sensor 198
EGR Solenoid 238
EGR Temperature Sensor 218
Electrical Load Switch 212
Engine and Transaxle Total Control Signal <A/T> 248
Engine Control Module Power Ground 177
Engine Control Module Terminal Voltages Inspection 254
Engine Coolant Temperature Sensor 190
Evaporative Emission Purge Solenoid 237
Fan Motor Relay 213
Fuel Pressure Solenoid <Turbo> 239
Fuel Pressure Test 251
Fuel Pump <Non Turbo> 178
Fuel Pump <Turbo> 179
Fuel Pump Operation Check 250
Fuel Pump Relay II 182
Fuel Pump Circuit Resistor 182
Heated Oxygen Sensor <California – Non Turbo> 220
Heated Oxygen Sensor <California – Turbo> 224
Heated Oxygen Sensor <Turbo except for California> 222
Idle Air Control Motor (Stepper Motor Type) 232
Ignition Coil and Ignition Power Transistor 233
Ignition Switch-ST and Park/Neutral Position Switch (PNP Switch) <A/T> 202
Ignition Switch-ST <M/T> 201
Induction Control Valve Position Sensor <Non Turbo> 216
Injectors <Non Turbo> 227
Injectors <Turbo> 229
Intake Air Temperature Sensor 186
Knock Sensor 210
Muffler Mode Changeover Switch <Turbo> 215
Power Steering Pressure Switch 208
Power Supply (MFI relay) and Ignition Switch-IG 174
Release of Residual Pressure from High Pressure Fuel Hose 250
Throttle Position Sensor 192
Turbocharger Waste Gate Solenoid <Turbo> 241
Variable Induction Control Motor (DC Motor) <Non Turbo> 246
Vehicle Speed Sensor <Non Turbo> 204
Vehicle Speed Sensor <Turbo> 206
Volume Air Flow Sensor 183
ON-VEHICLE INSPECTION OF MFI COMPONENTS <SOHC, Federal – Non Turbo, Canada – Non Turbo> **68**
Air Conditioning Switch and Compressor Clutch Relay 116
Barometric Pressure Sensor 90
Camshaft Position Sensor <DOHC> 102
Camshaft Position Sensor <SOHC> 100
Closed Throttle Position Switch 98
Components Inspection Procedure 76
Component Location 68
Crankshaft Position Sensor <DOHC> 107
Crankshaft Position Sensor <SOHC> 104
EGR Solenoid <California> 155
EGR Temperature Sensor <California> 126
Electrical Load Switch <DOHC> 120
Engine and Transaxle Total Control Signal <A/T> 159
Engine Control Module Power Ground 80
Engine Control Module Terminal Voltages Inspection 165
Engine Coolant Temperature Sensor 92
Evaporative Emission Purge Solenoid 153

CONTINUED ON NEXT PAGE

Fan Motor Relay (Radiator Air Conditioning Condenser) 122
Fuel Pressure Test 162
Fuel Pump 81
Fuel Pump Operation Check 161
Heated Oxygen Sensor <California – SOHC> 132
Heated Oxygen Sensor <Except California – SOHC> 128
Idle Air Control Motor (Stepper Motor Type) 141
Ignition Coil and Ignition Power Transistor <DOHC> 149
Ignition Coil and Ignition Power Transistor <SOHC> 146
Ignition Switch-ST and Park/Neutral Position Switch (PNP Switch) <A/T> 110
Ignition Switch-ST <M/T> 109
Induction Control Valve Position Sensor <DOHC> 124
Injectors 136
Intake Air Temperature Sensor 87
Knock Sensor 118
Power Steering Pressure Switch 114
Power Supply (MFI relay) and Ignition Switch-IG 77
Release of Residual Pressure from High Pressure Fuel Hose 161
Throttle Position Sensor 95
Variable Induction Control Motor (DC Motor) <DOHC> 157
Vehicle Speed Sensor 112
Volume Air Flow Sensor 84

SERVICE ADJUSTMENT PROCEDURES 63
Adjustment of Closed Throttle Position Switch and Throttle Position Sensor (TPS) 65
Adjustment of Fixed SAS 67
Basic Idle Speed Adjustment 63
Curb Idle Speed Inspection ..... Refer to GROUP 11
Throttle Body (Throttle Valve Area) Cleaning 65

SPECIAL TOOLS 10

SPECIFICATIONS 8
General Specifications 8
Sealant 9
Service Specifications 9

THROTTLE BODY 262

TROUBLESHOOTING 12
Check Chart Classified by Problem Symptoms 25
Circuit Diagram 27
Check Engine/Malfunction Indicator Lamp 14
Explanation and Cautions about Harness Check 13
Explanation of Troubleshooting Procedures 12
On-board Diagnostic 15
Problem Symptoms Table (For Your Information) 26

GENERAL INFORMATION

MULTIPORT FUEL INJECTION (MFI) SYSTEM DIAGRAM

<Federal SOHC>

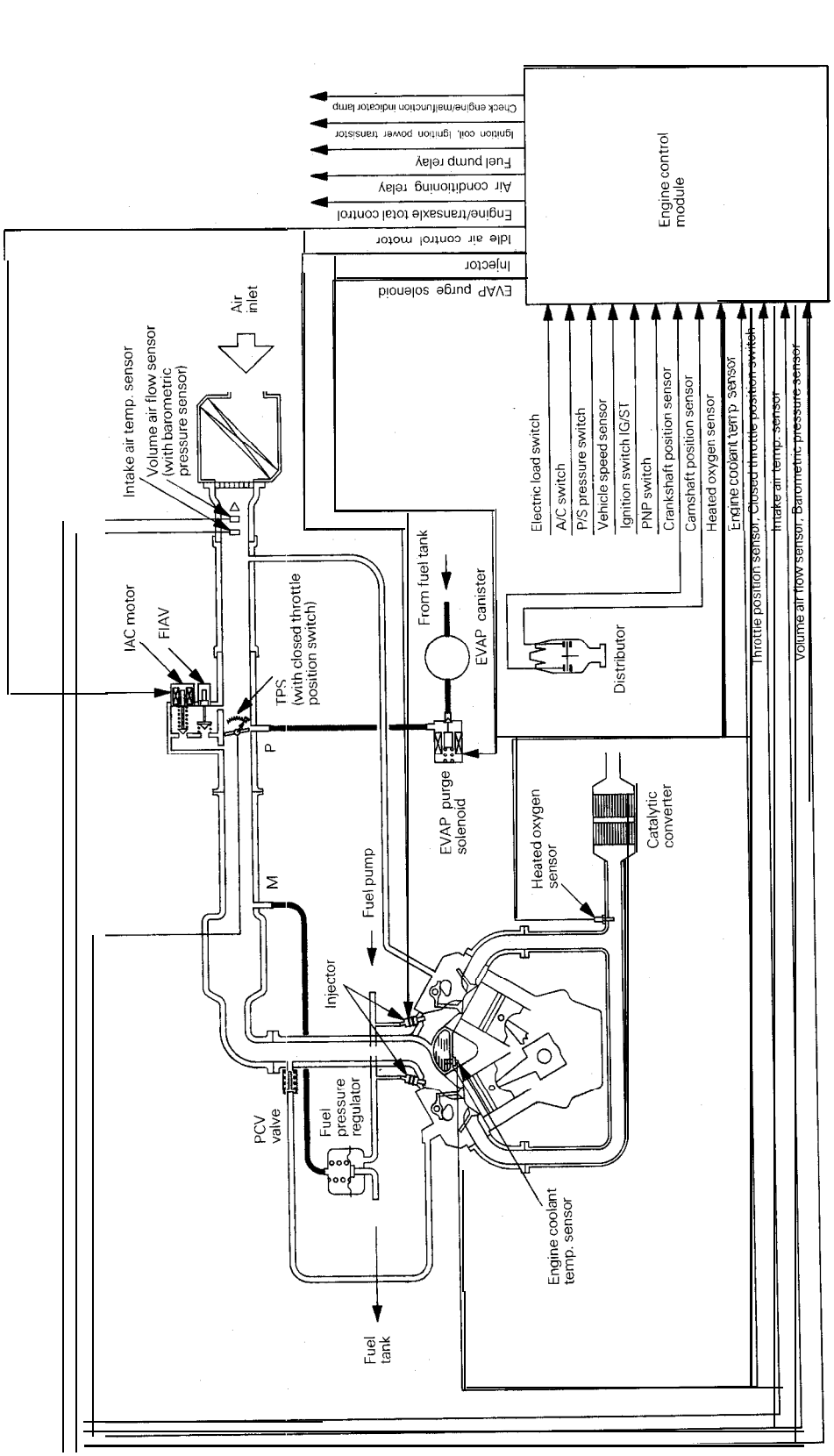

<California SOHC>

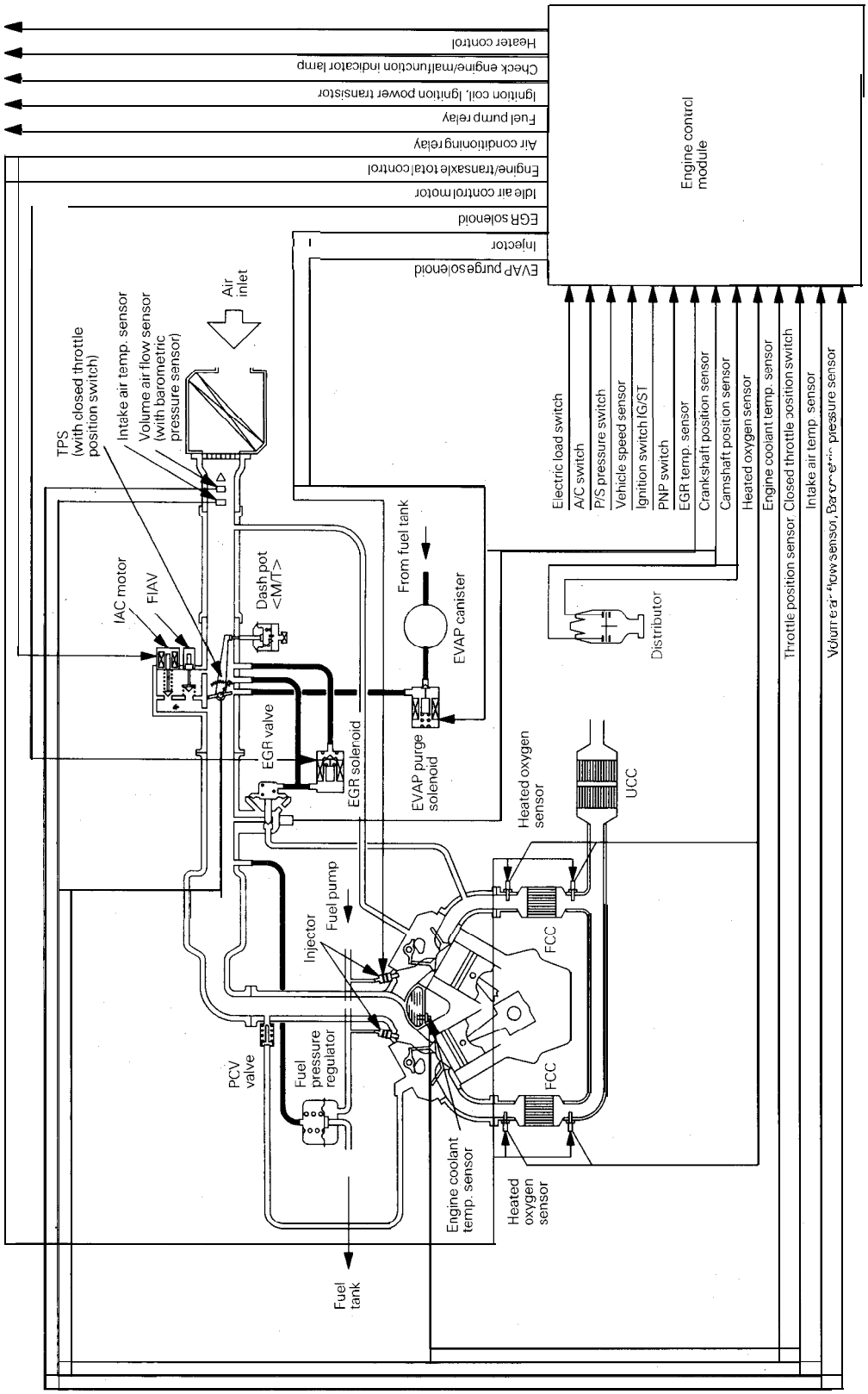

7FU1464

<Federal DOHC-Non Turbo>

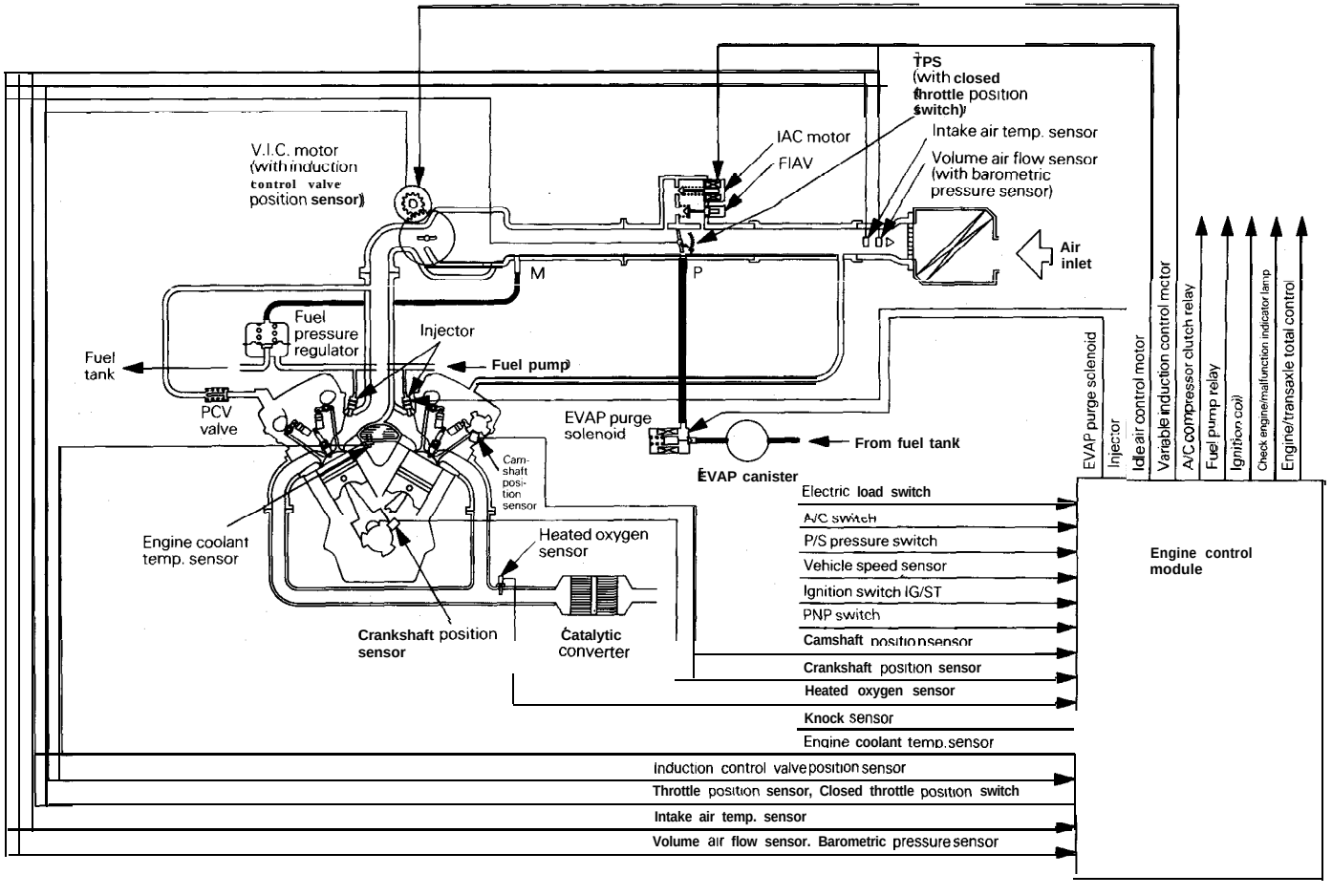

7FU1323

<California DOHC-Non Turbo>

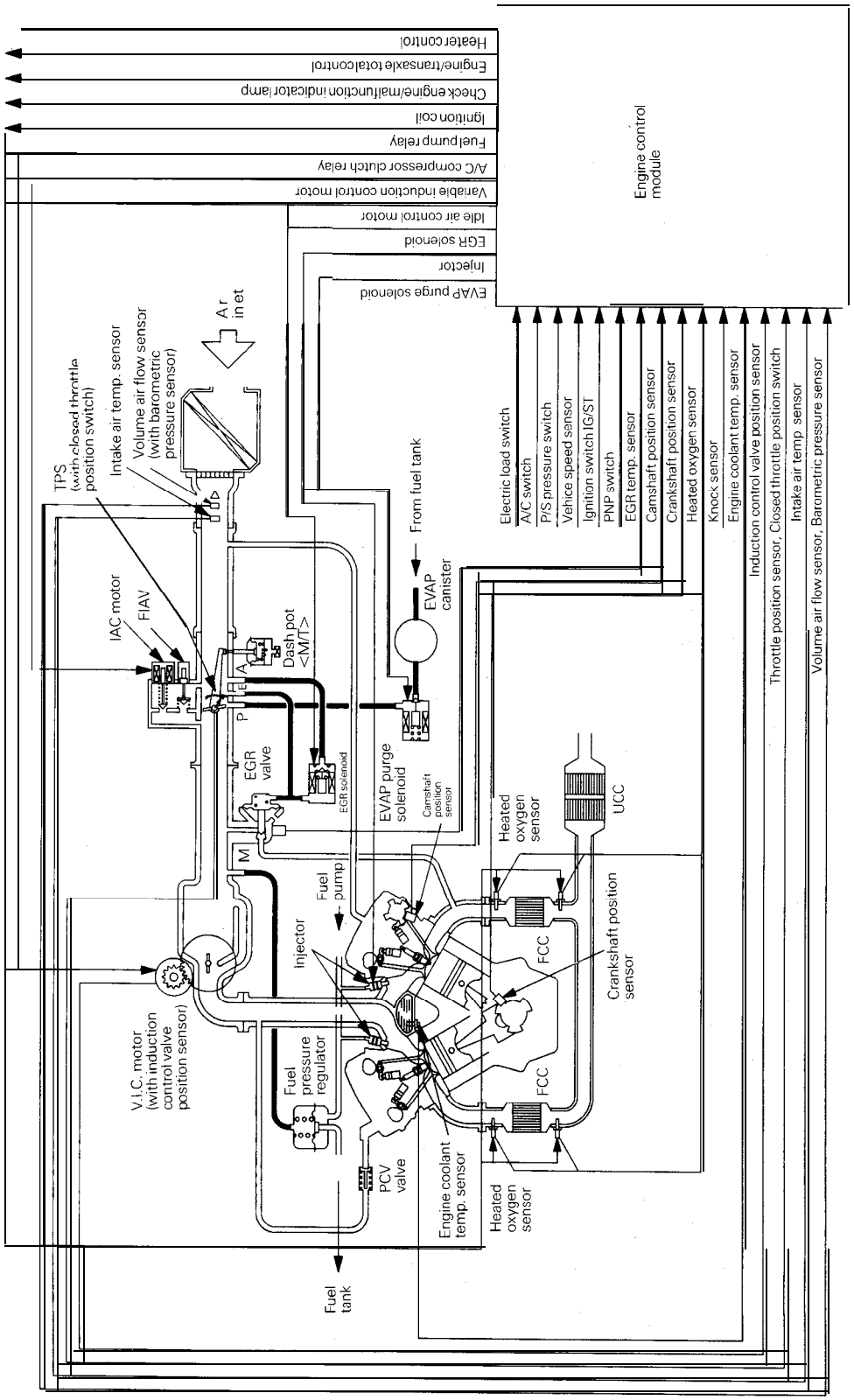

<Turbo>

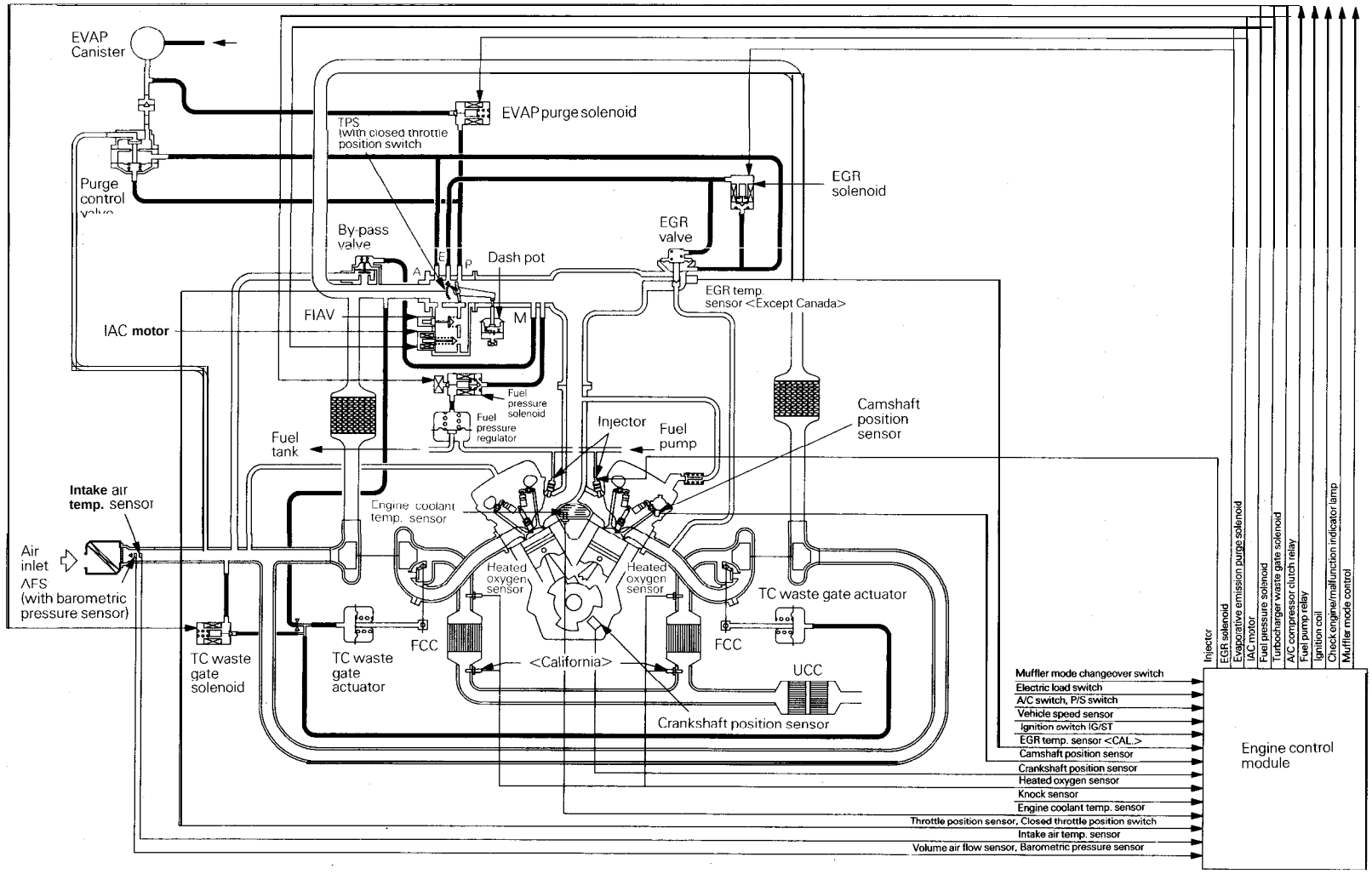

7FU1463

SPECIFICATIONS

GENERAL SPECIFICATIONS

terns	Specifications
Throttle body	
Throttle bore mm (in.)	
<SOHC>	54 (2.13)
<DOHC>	60 (2.36)
Throttle position sensor	Variable resistor type
Idle air control motor	Stepper motor type Stepper motor type by-pass air control system with the first idle air valve
Closed throttle position switch	Rotary contact type
Engine control module	
Identification model No.	
Federal <SOHC>	E2T35693
<DOHC – Non Turbo>	E2T35694
<DOHC -Turbo>	E2T61373
California <SOHC>	E2T35692
<DOHC – Non Turbo>	E2T61371
<DOHC-Turbo>	E2T61372
Canada <SOHC>	E2T35693
<DOHC – Non Turbo>	E2T35694
<DOHC-Turbo>	E2T61373
Sensors	
Volume air flow sensor	Karman vortex type
Barometric pressure sensor	Semiconductor type
Intake air temperature sensor	Thermistor type
Engine coolant temperature sensor	Thermistor type
Heated oxygen sensor	Zirconia type
Vehicle speed sensor	
<Non Turbo>	Reed switch type
<Turbo>	Magnetic reluctance element type
Knock sensor <DOHC>	Piezoelectric type
Camshaft position sensor	
<SOHC>	Photo interrupter type
<DOHC>	Hall element type
Crankshaft position sensor	
<SOHC>	Photo interrupter type
<DOHC>	Hall element type
Induction control valve position sensor <DOHC – Non Turbo>	Hall element type
EGR temperature sensor <California, Federal -Turbo>	Thermistor type
Power steering pressure switch	Contact switch type

Items	Specifications
Actuators	
Multiport fuel injection (MFI) relay type	Contact switch type
Injector type and number	Electromagnetic, 6
Injector identification mark <SOHC>	S21 OH
<DOHC – Non Turbo>	SDH210
<DOHC -Turbo>	BDL360
Variable induction control motor <DOHC – Non Turbo>	Direct current motor type
Evaporative emission purge solenoid	ON/OFF type solenoid valve
EGR solenoid <California-SOHC, DOHC – Non Turbo, Turbo>	Duty cycle type solenoid valve
Fuel pressure solenoid <DOHC -Turbo:>	ON/OFF type solenoid valve
Turbocharger waste gate solenoid <DOHC -Turbo>	Duty cycle type solenoid valve
Fuel pressure regulator	
Regulated pressure kPa (psi) <SOHC, DOHC – Non Turbo>	335 (47.6)
<DOHC -Turbo>	300 (43.5)

SERVICE SPECIFICATIONS

Items	Specifications
Basic ignition timing	5" ±2°BTDC at curb idle
Curb idle speed rpm	700 ±100
Idle speed when air conditioning is on rpm	
<M/T>	900 in neutral
<A/T>	650 in D range
Basic idle speed rpm	700 ± 50
Throttle position sensor adjusting voltage V	0.4 – 1.0
Throttle position sensor resistance kΩ	3.5 – 6.5
Idle air control motor (stepper motor) coil resistance Ω	28 – 33 [at 20°C (68°F)]
Intake air temperature sensor resistance kΩ	2.7 [at 20°C (68°F)]
Engine coolant temperature sensor resistance kΩ	
20°C (68°F)	2.4
80°C (176°F)	0.3
Fuel pressure kPa (psi)	
Vacuum hose disconnection <SOHC, DOHC – Non Turbo>	330 – 350 (47 – 50) at curb idle
<DOHC-Turbo>	295 – 315 (43 – 45) at curb idle
Vacuum hose connection <SOHC, DOHC- Non Turbo>	Approx. 270 (38) at curb idle
<DOHC -Turbo>	Approx. 235 (34) at curb idle
Injector coil resistance Ω <SOHC, DOHC – Non Turbo>	13 – 16 [at 20°C (68°F)]
<DOHC -Turbo>	2 – 3 [at 20°C (68°F)]

SEALANT

Items	Specified sealant
Engine coolant temperature sensor threaded portion	MOPAR Part No. 4318034 or equivalent

SPECIAL TOOLS

Tool number and tool name		Replaced by Miller tool number	Application
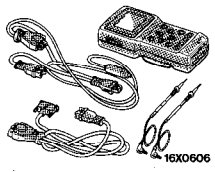	MB991502 Scan tool (MUT-II)	DRB-II Scan tool	• Reading diagnostic trouble code
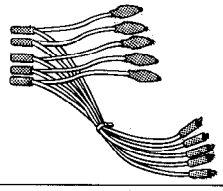	MB991348 Test harness set	DRB-II Scan tool	• Adjustment of closed throttle position switch and throttle position sensor • Inspection by oscilloscope
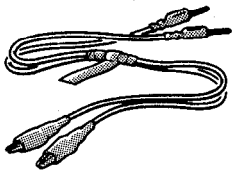	MB991529 Diagnostic trouble code check harness	Tool not necessary if scan tool (MUT-II) is available.	• Checking the diagnostic trouble code • Basic idle speed adjustment
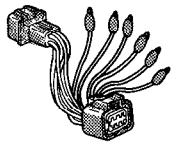	MD998463 Test harness (6 pin, square)	DRB-II Scan tool	• Idle air control motor inspection • Inspection by oscilloscope
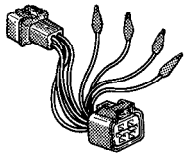	MD998464 Test harness (4 pin, square)	DRB-II Scan tool	• Heated oxygen sensor inspection <California-Non Turbo, Turbo> • Inspection by oscilloscope
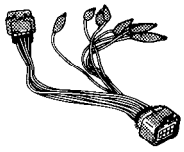	MD998474 Test harness (8 pin, square)	DRB-II Scan tool	• Inspection by oscilloscope
	MD998478 Test harness (3 pin, triangle)	DRB-II Scan tool	• Inspection by oscilloscope
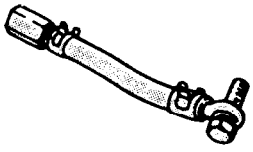	MD998709 Adapter hose	–	• Measurement of fuel pressure
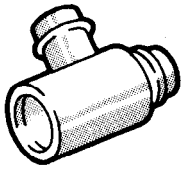	MD998742 Hose adapter	–	

Tool number and tool name	Replaced by Miller tool number	Application
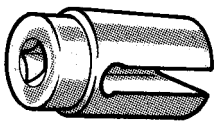 MD998773 Knock sensor wrench	–	• Removal/Installation of knock sensor

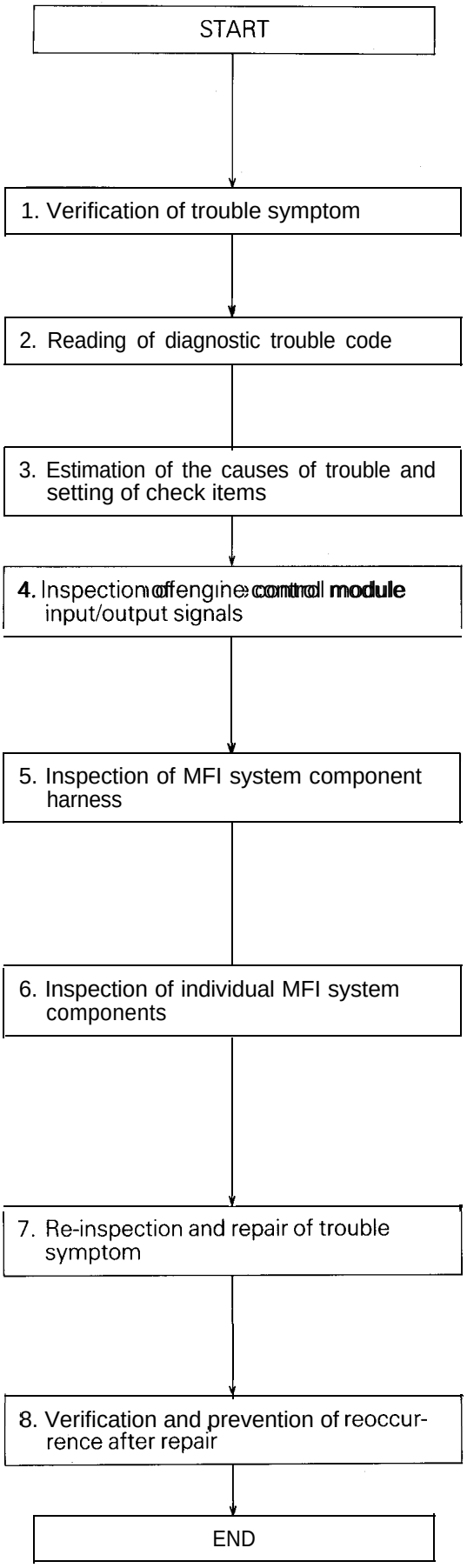

TROUBLESHOOTING

EXPLANATION OF TROUBLESHOOTING PROCEDURES

Effective troubleshooting procedures for MFI system problems are given below.

1. Verification of trouble symptom
   - Reproduce trouble symptom and verify the characteristics of the trouble and the conditions (engine condition, driving conditions, etc.) under which it is produced.
2. Reading of diagnostic trouble code
   - Read diagnostic trouble code and if a malfunction code is output, locate and correct the trouble referring to the DIAGNOSIS CHART.
3. Estimation of the causes of trouble and setting of check items
   - Referring to the Check Chart, verify the check items and checking order for the trouble symptom.
4. Inspection of engine control module input/output signals
   - Using the scan tool or oscilloscope, check the engine control module input/output signals.
   - If the signals are normal, judge the sensor input/actuator control as normal and proceed to check the input/output signals of the next check item.
5. Inspection of MFI system component harness
   - If the engine control module input/output signals are abnormal, check the MFI system component body harness and repair as necessary.
   - After repair, check the engine control module input/output signals again. If they are normal, proceed to check the input/output signals of the next check item.
6. Inspection of individual MFI system components
   - If the body harness is normal but the engine control module input/output signals are abnormal, check individual MFI system components and repair or replace as necessary.
   - After repair or replacement, check the engine control module input/output signals again. If they are normal, proceed to check the input/output signals of the next check item.
7. Re-inspection and repair of trouble symptom
   - If the harness inspection and individual component inspection results are normal but the engine control module input/output signals are abnormal, re-examine the causes of trouble referring to the troubleshooting hints and the checks and repairs included in other groups.
8. Verification and prevention of reoccurrence after repair
   - Perform tests to see if the same problems occur again and make sure that the same problems will not be repeated.
   - Remove the true causes of the trouble to prevent its reoccurrence.

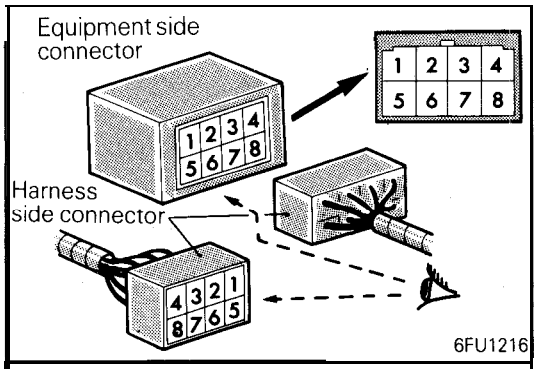

EXPLANATION AND CAUTIONS ABOUT HARNESS CHECK

- The connector symbol shown is as viewed from the terminal end of the connector inside the vehicle.
- "SV" used as the standard value in voltage check stands for system voltage.

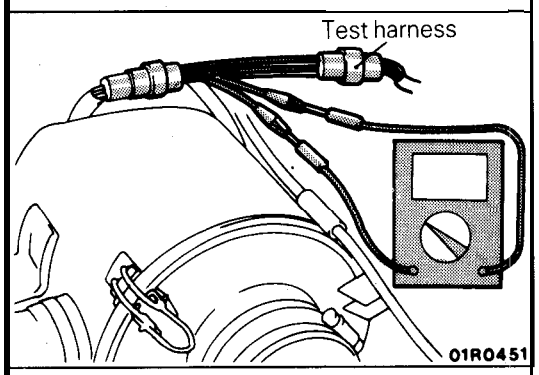

- When checking a waterproof connector for circuit continuity, be sure to use the special tool, Test Harness.
  Never insert the test probe from the harness side as this causes loss of waterproof characteristics and corrosion may result.
  There are various test harnesses and the appropriate one for the connector being tested should be used.

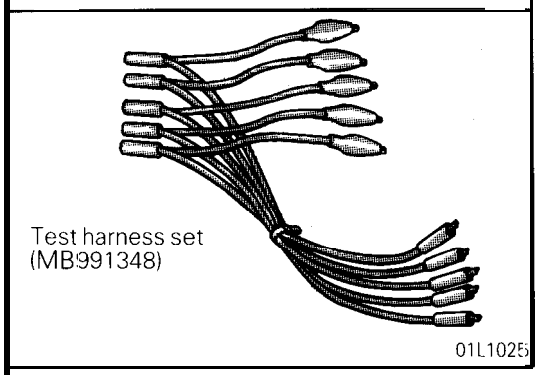

- If the appropriate test harness for the particular connector is not available, the use of the Test Harness Set (MB991348) which can be connected directly between the terminals is recommended.
- When checking the terminal voltage with the connector disconnected, do not insert the test probe if the check terminal is female.
  If the test probe is forced into the terminal, poor contact may be caused.

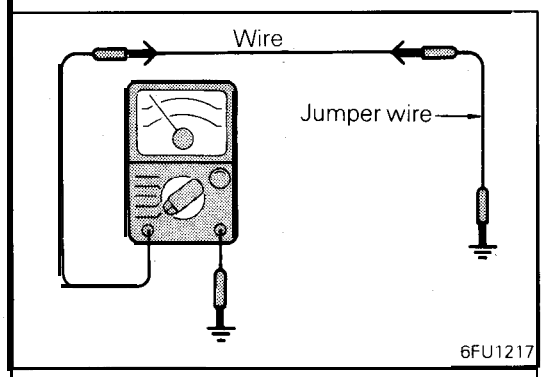

- When checking an open circuit of a wire with its ends physically separated, ground one end using a jumper wire and check the continuity between the other end and ground. Repair the wire if there is no continuity.

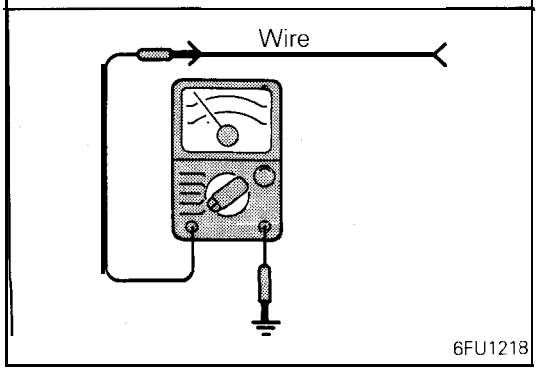

- When checking short-circuit to ground of a wire, open one end of the wire and check continuity between the other end and ground. If there is continuity, the wire is short-circuited to ground and requires repair.
- For checking continuity, use an analog ohmmeter (or circuit tester) as a rule.

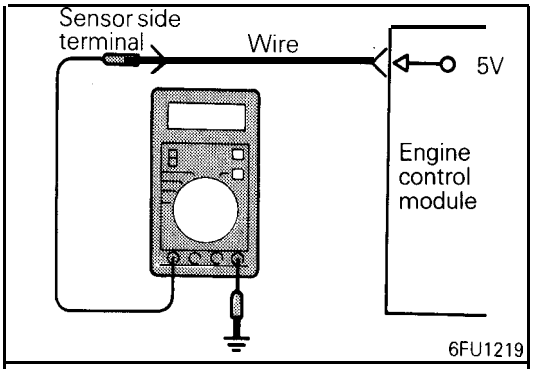

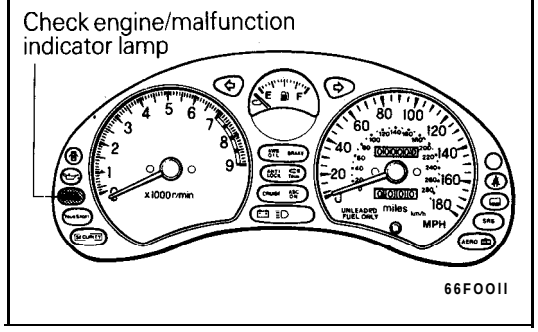

- If the sensor impressed voltage is abnormal, check the wire for an open circuit or short-circuit to ground and repair as necessary. If the wire is normal, replace the engine control module and check again.
- To check the voltage, use a digital voltmeter (or circuit tester) as a rule.
  [However, use an analog voltmeter for checking the power transistor drive voltage.]

CHECK ENGINE/MALFUNCTION INDICATOR LAMP

Among the on-board diagnostic items, a check engine/ malfunction indicator lamp comes on to notify the driver of the emission control items when an irregurality is detected. However, when an irregular signal returns to normal and the engine control module judges that it has returned to normal, the check engine/malfunction indicator lamp goes out. Moreover, when the ignition switch is turned off, the lamp goes out. Even if the ignition switch is turned on again, the lamp does not come on until the irregularity is detected. Here, immediately after the ignition switch is turned on, the check engine/malfunction indicator lamp is lit for 5 seconds to indicate that the check engine/malfunction indicator lamp operates normally.

ITEMS INDICATED BY THE CHECK ENGINE/ MALFUNCTION INDICATOR LAMP

Engine control module
Heated oxygen sensor
Volume air flow sensor
Intake air temperature sensor
Throttle position sensor
Engine coolant temperature sensor
Crankshaft position sensor
Camshaft position sensor
Barometric pressure sensor
Knock sensor <DOHC>
Ignition timing adjustment signal <DOHC>
Injector
EGR system <California – Non Turbo, Turbo>
Ignition coil, ignition power transistor unit <DOHC>

Caution

The check engine/malfunction indicator lamp comes on when the line of the ignition timing adjustment terminal is shorted to ground. Therefore, the lamp also comes on when the ignition timing adjustment terminal is grounded to adjust the ignition timing, but this does not show any abnormality.

CHECK ENGINE MALFUNCTION INDICATOR LAMP INSPECTION

(1) Check that when the ignition switch is turned on, the lamp illuminates for about 5 seconds and then goes out.
(2) If the lamp does not illuminate, check for open circuit in harness, blown fuse and blown bulb.

ON-BOARD DIAGNOSTIC

The engine control module monitors the input/output signals (some signals at all times and the others under specified conditions) of the engine control module.
When it is noticed that an irregularity has continued for a specified time or longer from when the irregular signal is initially monitored, passing a certain number, the engine control module judges that an irregularity has occurred, memorizes the diagnostic trouble code, and outputs the signal to the diagnostic output terminal.
There are 23 diagnostic items, including the normal state, and the diagnostic results can be read out with a voltmeter or scan tool.
Moreover, since memorization of the diagnostic trouble codes is backed up directly by the battery, the diagnostic results are memorized even if the ignition key is turned off. The diagnostic trouble codes will, however, be erased when the battery terminal or the engine control module connector is disconnected.
The diagnostic trouble code can also be erased by turning on the ignition switch and sending the diagnostic trouble code erase signal from the scan tool to the engine control module.

Caution
If the sensor connector is disconnected with the ignition switch turned on, the diagnostic trouble code is memorized. In this case, send the diagnostic trouble code erase signal from the scan tool to the engine control module or disconnect the battery terminal (–) for 10 seconds or more, and the diagnostic memory will be erased.

The 23 diagnostic items are provided as follows, and if plural items are activated, they are all indicated sequentially from the smallest code number.

Caution
The diagnostic trouble code for the ignition timing adjustment signal is output when the line of the ignition timing adjustment terminal is shorted to ground. Therefore, the diagnostic trouble code is also output when the ignition timing adjustment terminal is grounded to adjust the ignition timing, but this does not show any abnormality.

DIAGNOSTIC CHART (FAULT TREE)

Diagnostic trouble code		Diagnostic item	Check item (Remedy)	Memory
No.	Output signal pattern			
–	Engine control module H L 12A0104	ground	• Fuse • Harness and connector • Ground (Replace ECM if power + available)	
11	H L 12A0104	Heated oxygen sensor <Except California model> Left bank heated oxygen sensor (front) <California>	●Harness and connector ●Heated oxygen sensor ●Fuel pressure ● Injectors (Replace if defective.) ●Intake air leaks	Retained
12	H L 12A0104	Volume air flow sensor	●Harness and connector (If harness and connector are normal, replace volume air flow sensor assembly.)	Retained
13	H L 12A0104	Intake air temperature sensor	●Harness and connector ●Intake air temperature sensor	Retained
14	H L 12A0104	Throttle position sensor	● Harness and connector ● Throttle position sensor ●Closed throttle position switch	Retained
21	H L 12A0107	Engine coolant temperature sensor	●Harness and connector ●Engine coolant temperature sensor	Retained
22	H L 12A0107	Crankshaft position sensor	●Harness and connector (If harness and connector are normal, replace crank-shaft position sensor assembly.)	Retained
23	H L 12A0107	Camshaft position sensor	●Harness and connector (If harness and connector are normal, replace cam-shaft position sensor.)	Retained
24	H L 12A0107	Vehicle speed sensor	●Harness and connector ● Vehicle speed sensor	Retained
25	H L 12A0107	Barometric pressure sensor	●Harness and connector (If harness and connector are normal, replace barometric pressure sensor assembly.)	nRetained 12A010
31	H L 12A0468	Knock sensor <DOHC>	● Harness and connector (If harness and connector are normal, replace knock sensor.)	Retained

NOTE
Do not replace the ECM until a thorough terminal check reveals are no short/open circuits

Diagnostic trouble code		Diagnostic item	Check item (Remedy)	Memory
No.	Output signal pattern			
36	12A0105	Ignition timing adjustment signal <DOHC>	●Harness and connector	–
39	12A0105	Heated oxygen sensor <Turbo other than California model> Right bank heated oxygen sensor (front) <California>	● Harness and connector ●Heated oxygen sensor ●Fuel pressure ●Injectors (Replace if defective) ●Intake air leaks	Retained
41	12A0105	Injector	●Harness and connector ●Injector coil resistance	Retained
43	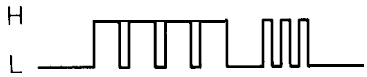 12A0105	EGR <California – Non Turbo, Turbo>	●Harness and connector ● EGR thermo-sensor ● EGR valve ● EGR solenoid ● EGR valve control vacuum	Retained
44	12A0105	Ignition coil, Ignition power transistor unit (No. 1–4 cylinder) <DOHC>	●Harness and connector ●Ignition coil ●Ignition power transistor unit	Retained
52	12A0105	Ignition coil, Ignition power transistor unit (No. 2–5 cylinder) <DOHC>	●Harness and connector ● Ignition coil ●Ignition power transistor unit	Retained
53	12A0105	Ignition coil, Ignition power transistor unit (No. 3–6 cylinder) <DOHC>	●Harness and connector ●Ignition coil ●Ignition power transistor unit	Retained
59	12A0105	Left bank heated oxygen sensor (Rear) <California>	●Harness and connector ●Heated oxygen sensor ●Fuel pressure ● Injectors (Replace if defective) ●Intake air leaks	Retained
61	12A0105	A cable from trans-axle control module, for transmission of torque reduction signal <A/T>	●Harness and connector (If harness and connector are normal, replace only transaxle control module.)	Retained
62	12A0105	Induction control valve position sensor <Non Turbo> <DOHC>	●Harness and connector (If harness, connector and induction control valve are normal, replace air intake plenum assembly.)	Retained

NOTE
Do not replace the ECM until a thorough terminal check reveals are no short/open circuits.

Diagnostic trouble code		Diagnostic item	Check item (Remedy)	Memory
No.	Output signal pattern			
69		Right bank heated oxygen sensor	●Harness and connector ●Heated oxygen sensor ●Fuel pressure ● Injectors (Replace if defective) ●Intake air leaks	Retained
–		Normal state	–	–

NOTE
Do not replace the ECM until a thorough terminal check reveals are no short/open circuits

TROUBLE DIAGNOSIS QUICK REFERENCE CHART

Diagnostic trouble code No.	Diagnostic item	Description	Major cause	Remarks (Symptoms, etc.)
–	Engine control module	Trouble in engine control module itself		• Engine stalls. • Engine cannot be started.
11	Heated oxygen sensor <Except California model> Left bank heated oxygen sensor (front) <California>	Despite air-fuel ratio feedback control (closed loop control), oxygen sensor signal voltage does not change (get lean/rich) for 30 seconds.	(1) Defective heated oxygen sensor (2) Open or short circuit in heated oxygen sensor circuit, or connector in loose contact	• Poor exhaust emission purifying performance
			(3) Improper fuel pressure (4) Defective injector (5) Air drawn in through gasket clearance, etc. (6) Defective engine control module	• Poor exhaust emission purifying performance • Poor startability • Unstable idling • Poor acceleration
12	Volume air flow sensor	Engine is running, but air flow sensor signal frequency is below 1 0Hz for 4 seconds.	(1) Defective volume air flow sensor (2) Open or short circuit in volume air flow sensor circuit, or connector in loose contact (3) Defective engine control module	• Poor acceleration* • Improper idling speed* • Unstable idling*
13	Intake air temperature sensor	(1) Intake air temperature sensor signal voltage is above 4.5V for 4 seconds. (2) Intake air temperature sensor signal voltage is below 0.27V for 4 seconds	(1) Defective intake air temperature sensor (2) Open or short circuit in intake air temperature sensor circuit, or connector in loose contact (3) Defective engine control module	@ Somewhat poor driveability" • At high temperature: (a)Poor startability" (b)Unstable idling*
14	Throttle position sensor	(1) Throttle position sensor signal voltage is below 0.2V for 4 seconds. (2) Idle switch is ON, but throttle position sensor signal voltage is above 2V.	(1) Throttle position sensor out of order or maladjusted (2) Open or short circuit in throttle position sensor circuit, or connector in poor contact	• Somewhat poor acceleration <M/T> • Poor driveability <A/T> • Engine stalls.
			(3) Closed throttle position switch ON failure (4) Short circuit in closed throttle position signal line (5) Defective engine control module	• Engine stalls. • Engine cannot be raced.
21	Engine coolant temperature sensor	(1) Engine coolant temperature sensor signal voltage is above 4.6V for 4 seconds. (2) Engine coolant temperature sensor signal voltage is below 0.1 1 V for 4 seconds. (3) During engine warm-up, engine coolant temperature sensor signal shows decrease in engine coolant temperature.	(1) Defective engine coolant temperature sensor (2) Open or short circuit in engine coolant temperature sensor circuit, or connector in poor contact (3) Defective engine control module	With engine cold • Poor startability* • Unstable idling* • Poor acceleration*

NOTE

*: **Failsafe/backup function is in operation**

Diagnostic trouble code No.	Diagnostic item	Description	Major cause	Remarks (Symptoms, etc.)
22	Crankshaft position sensor	(1) Cranking the engine for more than four seconds does not cause the crankshaft position sensor signal voltage to change (go high or low). (2) Abnormal crankshaft position sensor signal <DOHC>	(1) Defective crank angle sensor (2) Open or short circuit in crankshaft position sensor circuit, or connector in loose contact (3) Defective camshaft position sensor, or connector in loose contact (4) Defective engine control module	• Engine stalls. @ Engine cannot be started.
23	Camshaft position sensor	(1) Engine is running, but TDC sensor signal voltage does not change (get high/low) for 4 seconds. (2) TDC sensor signal pattern is abnormal. <DOHC>	(1) Defective camshaft position sensor (2) Open or short circuit in camshaft position sensor circuit, or connector in loose contact (3) Defective crankshaft position sensor, or connector in loose contact (4) Defective engine control module	• Engine stalls.*
24	Vehicle speed sensor	With the engine in accelerated operation at an engine speed of over 3,000 rpm, the vehicle speed sensor signal voltage does not change (go high or low).	(1) Defective vehicle speed sensor (2) Open or short circuit in vehicle speed sensor circuit, or connector in loose contact (3) Defective engine control module	When the vehicle is stopped with the engine in decelerated operation, the engine might stall.
25	Barometric pressure sensor	(1) Barometric pressure sensor signal voltage is above 4.5V for 4 seconds. (2) Barometric pressure sensor signal voltage is below 0.2V for 4 seconds.	(1) Defective barometric pressure sensor (2) Open or short circuit in barometric pressure sensor circuit, or connector in loose contact (3) Defective engine control module	• Unstable idling* • Poor acceleration* • Poor startability”
31	Knock sensor <DOHC>	Abnormal knock sensor signal voltage	(1) Defective knock sensor (2) Open or short circuit in knock sensor circuit, or connector in loose contact (3) Defective engine control module	• Poor acceleration*
36	Ignition timing adjustment signal <DOHC>	Ignition timing adjustment signal line short-circuited to ground	(1) Ignition timing adjustment signal line short-circuited to ground (2) Defective engine control module	• Poor acceleration • Overheated engine
39	Heated oxygen sensor <Turbo other than California model> Right bank heated oxygen sensor (front) <California>	Air-fuel ratio closed loop control is in effect but heated oxygen sensor signal voltage does not change (air-fuel mixture lean/rich).	(1) Defective heated oxygen sensor (2) Open or short circuit in heated oxygen sensor circuit, or connector in loose contact	• Poor exhaust emission purifying performance*
			(3) Improper fuel pressure (4) Defective injector (5) Air drawn in through gasket clearance, etc. (6) Defective engine control module	• Poor exhaust emission purifying performance* • Poor startability • Unstable idling • Poor acceleration
41	Injector	Injector is not driven for more than four consecutive seconds during engine cranking or idling operation.	(1) Defective injector (2) Open or short circuit in injector circuit, or connector in loose contact (3) Defective engine control module	• Poor idling • Poor acceleration • Poor startability

Diagnostic trouble code No.	Diagnostic item	Description	Major cause	Remarks (Symptoms, etc.)
43	EGR <California -Non Turbo, Turbo>	With the engine running after warmup, EGR amount too small (EGR temperature sensor signal voltage too high)	(1) EGR valve does not open. (2) EGR valve control negative pressure too low (3) Defective EGR control solenoid valve (4) Defective EGR temperature sensor (5) Open or short circuit in EGR temperature sensor circuit, or connector in loose contact (6) Defective engine control module	• Poor exhaust • emission purifying performance*
44	Ignition coil and ignition power transistor unit for 1-4 cylinders <DOHC>	With the engine running, no ignition signal is input (except in cases where no ignition signal is input to all the cylinders)	(1) Defective ignition coil (2) Open or short circuit in primary ignition circuit, or connector in loose contact (3) Defective ignition power transistor unit (4) Defective engine control module	• Unstable idling* • Poor acceleration* • Poor startability”
52	Ignition coil and ignition power transistor unit for 2-5 cylinders <DOHC>	With the engine running, no ignition signal is input (except in cases where no ignition signal is input to all the cylinders)	(1) Defective ignition coil (2) Open or short circuit in primary ignition circuit, or connector in loose contact (3) Defective ignition power transistor unit (4) Defective engine control module	• Unstable idling* • Poor acceleration* • Poor startability”
53	Ignition coil and ignition power transistor unit for 3-6 cylinders <DOHC>	With the engine running, no ignition signal is input (except in cases where no ignition signal is input to all the cylinders)	(1) Defective ignition coil (2) Open or short circuit in primary ignition circuit, or connector in loose contact (3) Defective ignition power transistor unit (4) Defective engine control module	• Unstable idling* • Poor acceleration* • Poor startability”
59	Left bank heated oxygen sensor (Rear) <California>	Engine warm-up has been completed, but oxygen sensor singal voltage does not rise above 0.1 V.	(1) Failure of oxygen sensor (2) A break or short in oxygen sensor circuit or poor contact of connectors (3) Failure of engine control module	• Decrease of exhaust gas purification performance*
61	A cable from transaxle control module, for transmission of torque reduction signal <A/T>	With the engine running, the “reduce torque” request signal voltage from the control module remains low for several seconds.	(1) “Reduce torque” request signal line short-circuited (2) Defective transmission control module (3) Defective engine control module	• Somewhat poor gearshift feeling*
62	Induction control valve position sensor <DOHC – Non Turbo>	Even if the variable induction control servo motor is driven several times, the induction control valve does not reach the target position (opening).	(1) Defective induction control valve position sensor (2) Open or short circuit in induction control valve position sensor circuit or connector in loose contact (3) Defective variable induction control motor (DC motor) (4) Open or short circuit in induction control motor (DC motor) circuit, or connector in loose contact (5) Defective engine control module	• Poor acceleration

Diagnostic trouble code No.	Diagnostic item	Description	Major cause	Remarks (Symptoms, etc.)
69	Right bank heated oxygen sensor (Rear) <California>	Engine warm-up has been completed, but oxygen sensor signal voltage does not rise above 0.1 V.	(1) Failure of oxygen sensor (2) A break or short in oxygen sensor circuit or poor contact of connectors (3) Failure of engine control module	• Decrease of exhaust gas purification performance*

LIST OF FAIL-SAFE/BACK-UP FUNCTIONS

When the failure of a major sensor is detected by the on-board diagnostics, the preset control logic provides controls to assure safe operation of the vehicle.

Trouble item	Controls to be provided in the event of trouble
Volume air flow sensor	(1) Based on throttle position sensor (TPS) signal and engine speed signal (crank angle sensor signal) basic driving time of injectors and basic ignition timing is read from the preset map. (2) Idle air control motor fixed at predetermined position, and no idling speed control achieved
Intake air temperature sensor	Controls provided on the assumption that intake air temperature is 25°C (77°F)
Throttle position sensor (TPS)	No additional fuel injection provided on the basis of throttle position sensor signal at acceleration
Engine coolant temperature sensor	Controls provided on the assumption that engine coolant temperature is 80°C (176°F) (Even if the sensor signal returns to normal, this control mode is retained until the ignition switch is set to OFF.)
Camshaft position sensor	(1) Fuel injected into the cylinders in the order 1-2-3-4-5-6 with irregular timing (Provided that no No. 1 cylinder top dead center position has been detected since the ignition switch was placed in the ON position) (2) Fuel cut 4 seconds after a failure was detected (Provided that no No. 1 cylinder top dead center position has been detected since the ignition switch was placed in the ON position)
Barometric pressure sensor	Controls provided on the assumption that barometric pressure is 101 kPa (760 mmHg) (sea level)
Knock sensor <DOHC>	Ignition timing is changed from that for premium gasoline to that for regular gasoline.
Ignition coil and ignition power transistor unit <DOHC>	Fuel cut for cylinders whose ignition signal is abnormal
Communication line with transmission control module <A/T>	No ignition timing retard control (overall engine-transmission control) achieved when transmission speeds are changed
Heated oxygen sensor (front) <All models>	No air-fuel ratio closed loop control achieved
Heated oxygen sensor (Rear) <California>	Only signals of oxygen sensor (front) installed upstream of catalyst are used, and the air-fuel ratio feedback control (closed loop control) is not performed.

READ OUT OF DIAGNOSTIC TROUBLE CODE

Precautions for Operation

(1) When battery voltage is low, no detection of failure is possible. Be sure to check the battery for voltage and other conditions before starting the test.
(2) Diagnostic item is erased if the battery or the engine control module connector is disconnected. Do not disconnect the battery before the diagnostic result is completely read.
(3) Be sure to connect or disconnect the scan tool with the ignition switch turned off. If the scan tool is disconnected with the ignition switch placed in the ON position, ABS diagnostic trouble code may be stored and ABS warning lamp turned on.

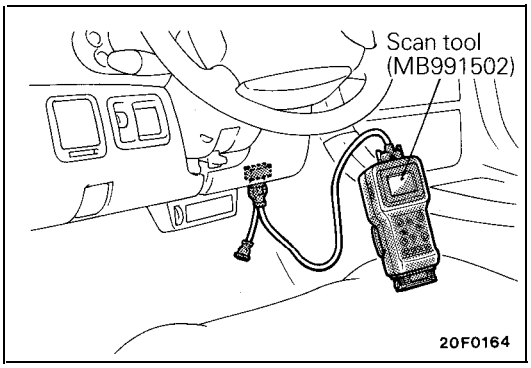

When using the scan tool

Caution
Connection and disconnection of the scan tool should always be made with the ignition switch in the OFF position.

(1) Connect the scan tool to the data link connector.
(2) Turn the ignition switch to ON.
(3) Take a reading of the diagnostic output.
(4) Repair the problem location, referring to the diagnostic chart.
(5) After turning the ignition switch once to OFF, turn it back to ON.
(6) Erase the diagnostic trouble code.
(7) Recheck to be sure that the condition is normal.

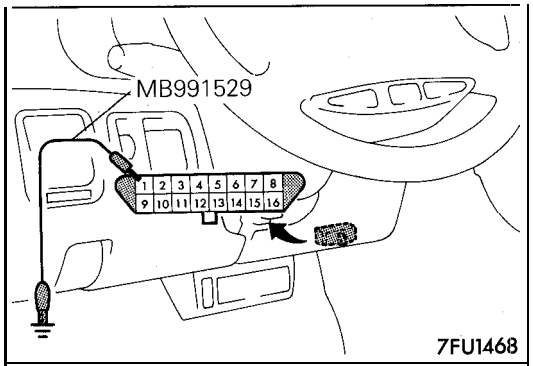

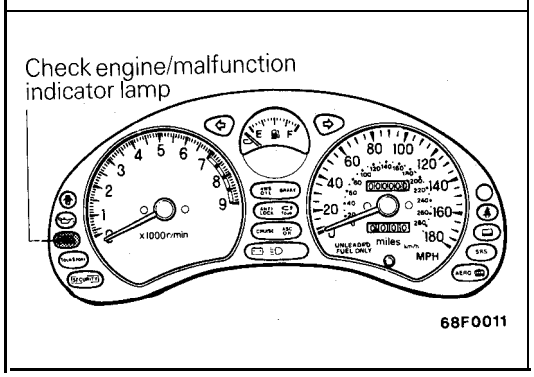

When using the check engine/malfunction indicator lamp

(1) Using the special tool (Diagnostic Trouble Code Check Harness), ground the diagnostic test mode control terminal (terminal 1) of the data link connector.
(2) Turn the ignition switch to ON.
(3) Read the diagnostic output by blinking of the check engine/malfunction indicator lamp.
(4) Repair the problem location, referring to the diagnostic chart.
(5) Erase the diagnostic trouble code by the following procedure.
  ① Turn the ignition switch to OFF.
  ② After removing the battery cable from the battery terminals for 10 seconds or more, reconnect the cable.
  ③ With the engine warmed up, idle the engine for approx. 10 minutes.
  ④ Turn the ignition switch to ON and take a reading of the diagnostic output to check if a normal code is output.

Diagnostic result indication method when check engine/malfunction indicator lamp is used

Typical blinking, made while diagnostic trouble code is output	Blinking when condition is normal
In case of diagnostic trouble code No.24 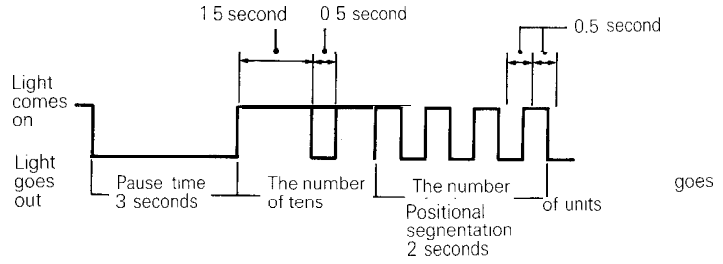 6FU2060	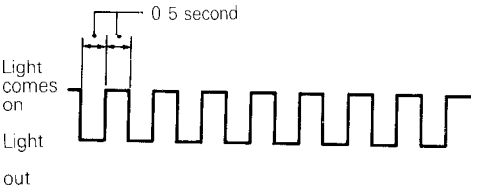 6FU2061

NOTE
Other diagnostic items are also output by lamp blinking corresponding to the same code number as when scan tool is used.

Diagnosis by DIAGNOSTIC TEST MODE II (INCREASED SENSITIVITY)

(1) Using the scan tool, changeover the diagnostic test mode of the engine control module to DIAGNOSTIC TEST MODE II (INCREASED SENSITIVITY).
(2) Road test the vehicle.
(3) Read the diagnostic trouble code in the same manner as "READ OUT OF DIAGNOSTIC TROUBLE CODE" and repair the malfunctioning part.
(4) Turn off the ignition switch once. Then turn it ON again.

NOTE
Turning OFF the ignition switch will cause the engine control module to changeover the diagnostic test module from the diagnostic test mode II to the diagnostic test mode I.

(5) Erase the diagnostic trouble code.

CHECK CHART CLASSIFIED BY PROBLEM SYMPTOMS

Problem symptoms / Check items	Starting		Idling stability			Driving						Stopping	Reference page (14A-)
	Will not start	Fires up and dies, Hard starting	Hunting, rough idle	Incorrect idle speed	Engine stall	Hesitation, Sag	Poor acceleration	Stumble	Shock	Surge	Knocking	Run-on (Dieseling)	
Power supply and ignition switch-IG	① [1]												77*1, 174*2
Engine control module power ground	② [2]												80*1, 177*2
Fuel pump	③ [3]	① [1]			① [1]	① [1]	① [1]						81*1, 178*2
Volume air flow sensor					⑬ [11]	⑫ [12]		⑤ [5]	⑤ [5]		④ [4]		84*1, 183*2
Intake air temperature sensor			⑤			⑧ [8]	⑨ [9]				② [2]		87*1, 186*2
Barometric pressure sensor			⑦			⑪ [11]	⑪ [11]				③ [3]		90*1, 188*2
Engine coolant temperature sensor		[3]	⑥ [5]	① [1]	⑤ [5]	⑩ [10]	⑩ [10]	④ [4]		③ [3]			92*1, 190*2
Throttle position sensor						⑨ [9]		③ [3]	④ [4]				95*1, 192*2
Closed throttle position switch			③ [3]	② [2]	④ [4]								98*1, 194*2
Camshaft position sensor	⑤ [5]	⑦ [7]			⑧ [7]				② [2]				100*1, 196*2
Crankshaft position sensor	⑥ [6]	⑧ [8]			⑨ [8]				③ [3]				88*1, 198*2
Ignition switch-ST <M/T>	④ [4]	③ [4]											109*1, 201*2
Ignition switch-ST and Park/Neutral position switch <A/T>	④ [4]	③ [4]		⑦									110*1, 202*2
Vehicle speed sensor					⑥				⑥				112*1, 204*2
Power steering pressure switch				③									114*1, 208*2
Air conditioning switch and compressor clutch relay				④									116*1, 209*2
Knock sensor <DOHC>											① [1]		118*1, 210*2
Electrical load switch <DOHC>				⑤									120*1, 212*2
Fan motor relay				⑥	⑪ [10]								122*1, 213*2
Induction control valve position sensor <DOHC – Non Turbo>						④ [4]	⑥ [6]						124*1, 216*2
Heated oxygen sensor			⑩										128*1, 220*2
Injectors	⑧ [8]	② [2]	② [2]		③ [3]	② [2]	② [2]	① [1]		① [1]		①	136*1, 227*2
Idle air control motor (stepper motor type)		④ [5]	① [1]	⑧ [3]	② [2]				⑨ [7]				141*1, 232*2
Ignition coil and ignition power transistor	⑦ [7]				⑩ [9]		⑫ [12]		① [1]		⑤ [5]		146*1, 233*2
Evaporative emission purge solenoid			⑧										153*1, 237*2
EGR solenoid <California – Non Turbo, Turbo>						⑦ [7]		⑥ [6]		④ [4]			155*1, 238*2
Fuel pressure solenoid <Turbo>		⑥	⑨		⑫		④ [4]						239*2
Turbocharger waste gate control solenoid <Turbo>							⑤ [5]						243*2
Active exhaust control unit <Turbo>						⑥ [6]	⑧ [8]						245*2
Variable induction control motor (DC motor) <DOHC – Non Turbo>						⑤ [5]	⑦ [7]						157*1, 246*2
Anti-lock braking signal <Turbo>									⑦				247*2
Engine and transaxle total control signal <A/T>									⑧ [6]	⑤ [5]			159*1, 248*2
Fuel pressure		⑤ [6]	④ [4]		⑦ [6]	③ [3]	③ [3]	② [2]		② [2]			162*1, 251*2

○: Warm engine (number inside indicates check order)
□: Cold engine (number inside indicates check order)

*1: SOHC, Federal – Non Turbo, Canada – Non Turbo
*2: California – DOHC Non Turbo, Turbo

PROBLEM SYMPTOMS TABLE (FOR YOUR INFORMATION)

	Items	Symptom
Starting	Won't start (no initial combustion)	The starter is used to crank the engine, but there is no combustion within the cylinders, and the engine won't start.
	Fires up and dies	There is combustion within the cylinders, but then the engine soon stalls.
	Hard starting	Engine starts after cranking awhile
Idling stability	Hunting	Engine speed doesn't remain constant; changes at idling.
	Rough idle	Usually, a judgement can be based upon the movement of the tachometer pointer, and the vibration transmitted to the steering wheel, shift lever, body, etc. This is called rough idling.
	Incorrect idle speed	The engine doesn't idle at the usual correct speed.
	Engine stall Die out Pass out	Die out The engine stalls when the foot is taken from the accelerator pedal, regardless of whether the vehicle is moving or not. Pass out The engine stalls when the accelerator pedal is depressed or while it is being used.
Driving	Hesitation Sag	"Hesitation" is the delay in response of the vehicle speed (engine rpm) that occurs when the accelerator pedal is depressed in order to accelerate from the speed at which the vehicle is now traveling, or a temporary drop in vehicle speed (engine rpm) during such acceleration. Serious hesitation is called "sag". 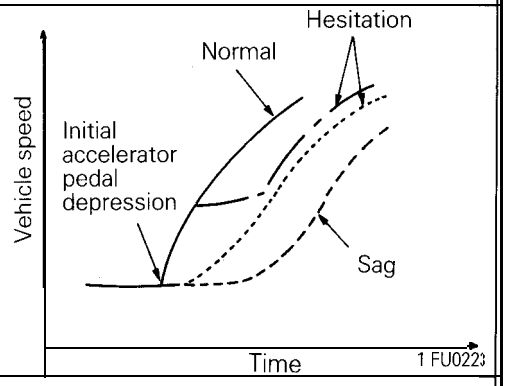
	Poor acceleration	Poor acceleration is inability to obtain an acceleration corresponding to the degree of throttle opening, even though acceleration is smooth, or the inability to reach maximum speed.
	Stumble	Engine rpm increase is delayed when the accelerator pedal is initially depressed for acceleration from the stopped condition. 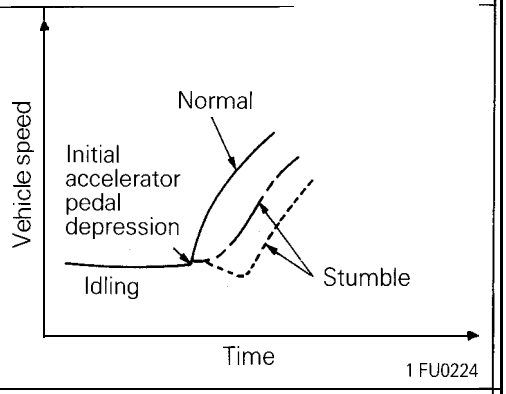
	Shock	The feeling of a comparatively large impact or vibration when the engine is accelerated or decelerated.
	Surge	This is slight acceleration and deceleration feel usually at steady light throttle cruise must notable under hight loads.
	Knocking	A sharp sound like a hammer striking the cylinder walls during driving and which adversely affects driving.
Stopping	Run-on (Dieseling)	Also called dieseling, this is a continued operation of the engine after the ignition switch is turned off.

CIRCUIT DIAGRAM <SOHC>

(FEDERAL AND CANADA)

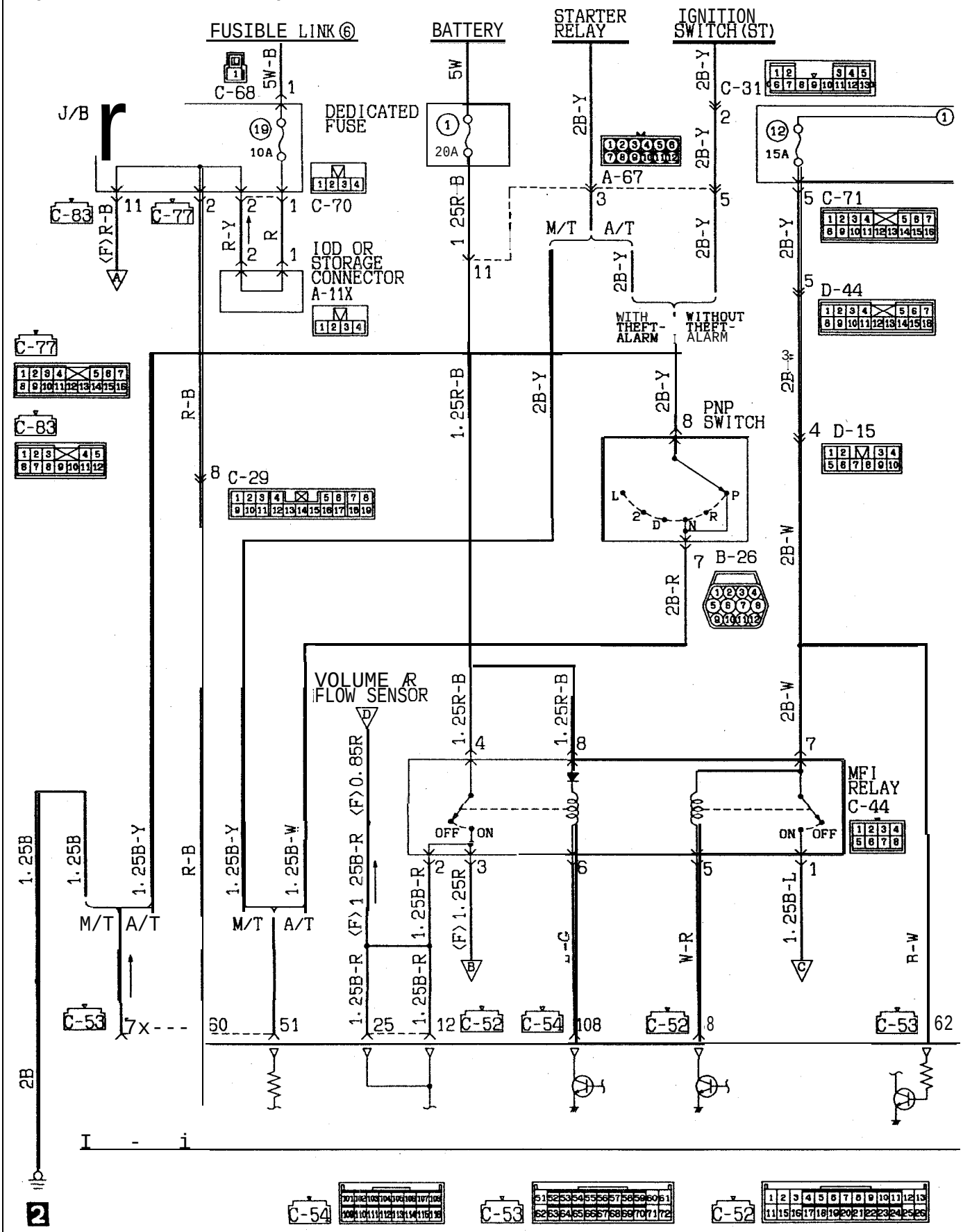

IX35-AC-R0501-N4C

CIRCUIT DIAGRAM <SOHC> (CONTINUED)

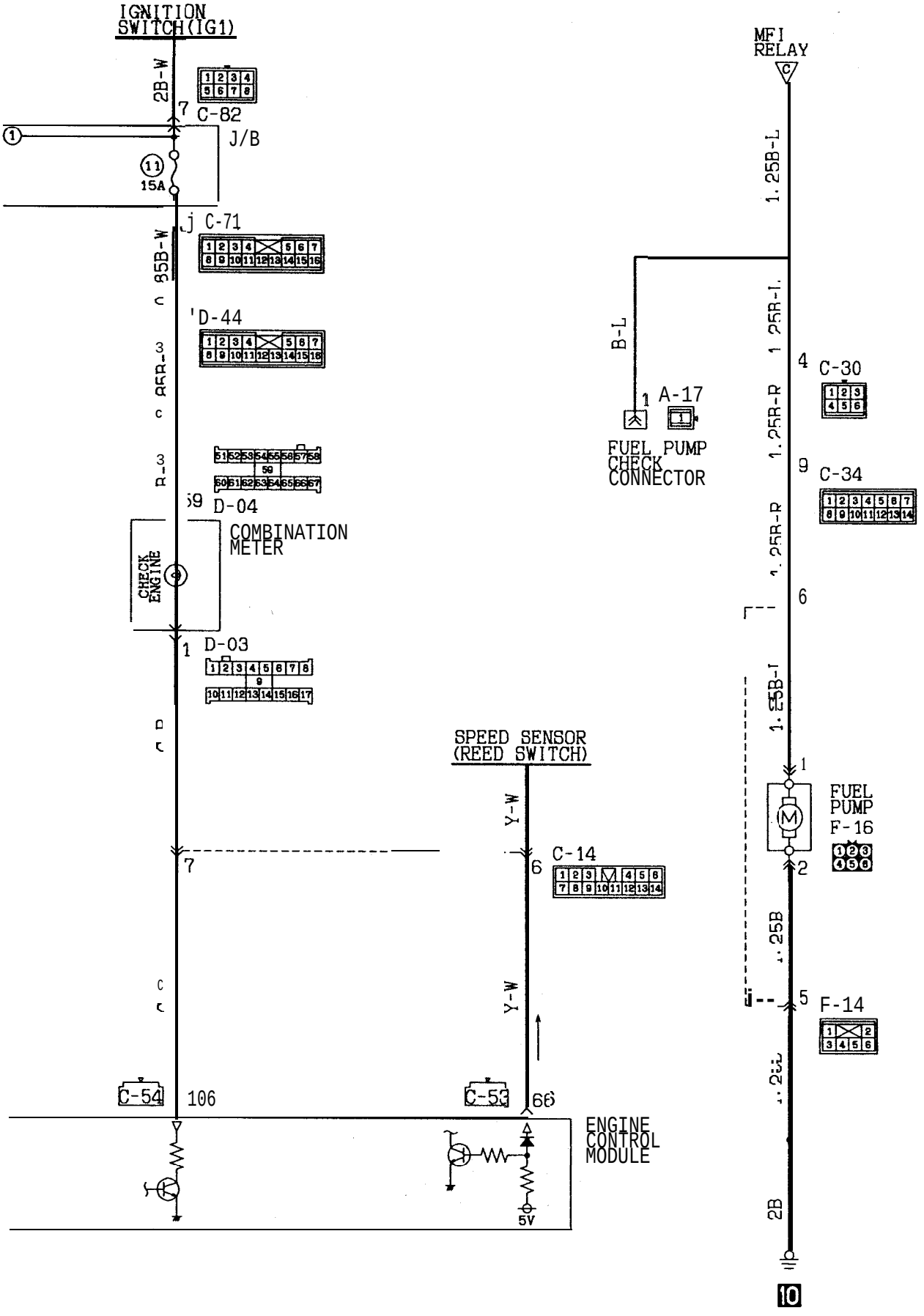

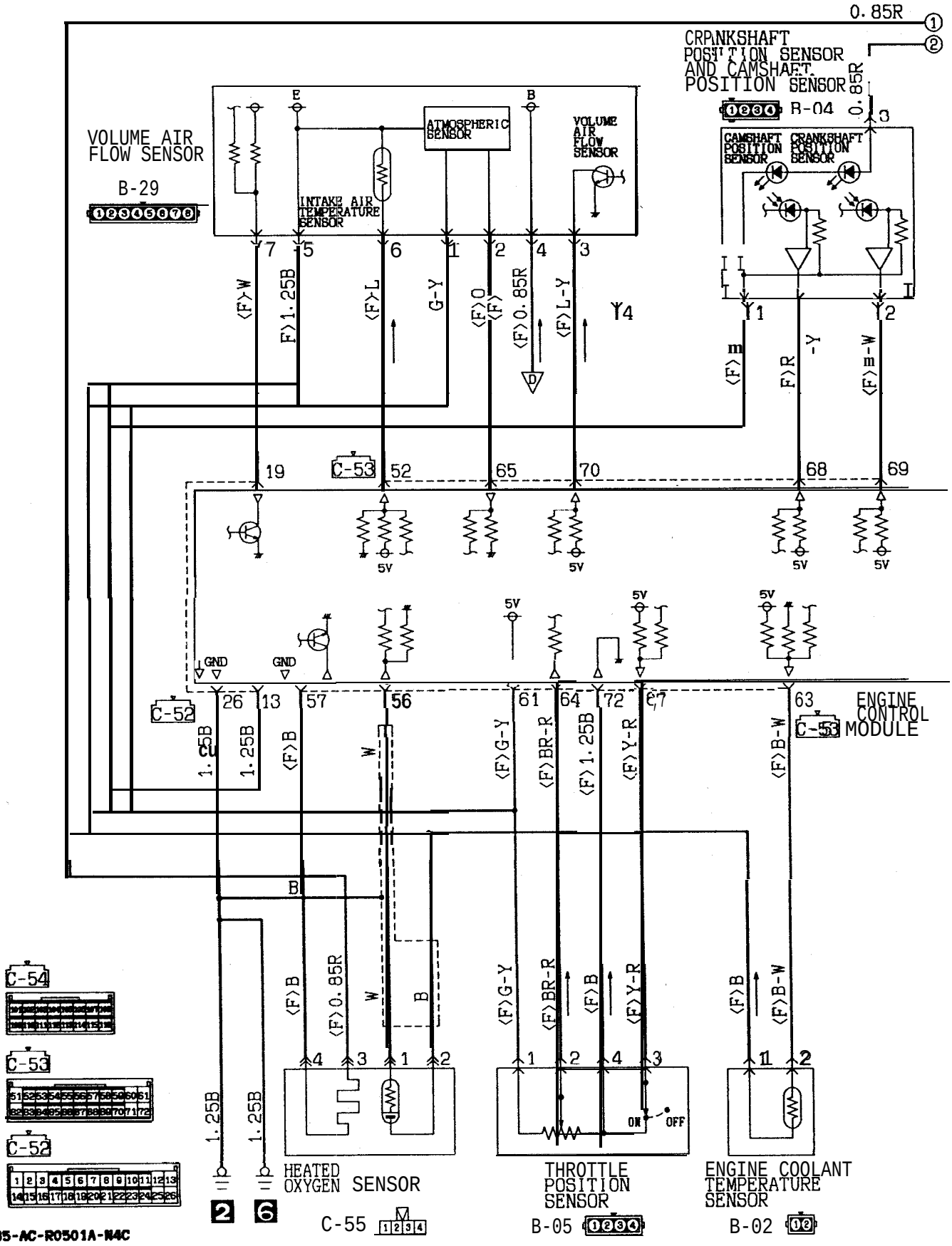
0.85R
CRPANKSHAFT POSITION SENSOR AND CAMSHAFT POSITION SENSOR
B-04
VOLUME AIR FLOW SENSOR
B-29
ATMOSPHERIC SENSOR
INTAKE AIR TEMPERATURE SENSOR
VOLUME AIR FLOW SENSOR
CAMSHAFT POSITION SENSOR
CRANKSHAFT POSITION SENSOR
C-53
C-52
5V
GND
ENGINE CONTROL MODULE
C-54
C-55
B-05
B-02
HEATED OXYGEN SENSOR
THROTTLE POSITION SENSOR
ENGINE COOLANT TEMPERATURE SENSOR
ON
OFF
KX35-AC-R0501A-N4C

CIRCUIT DIAGRAM <SOHC> (CONTINUED)

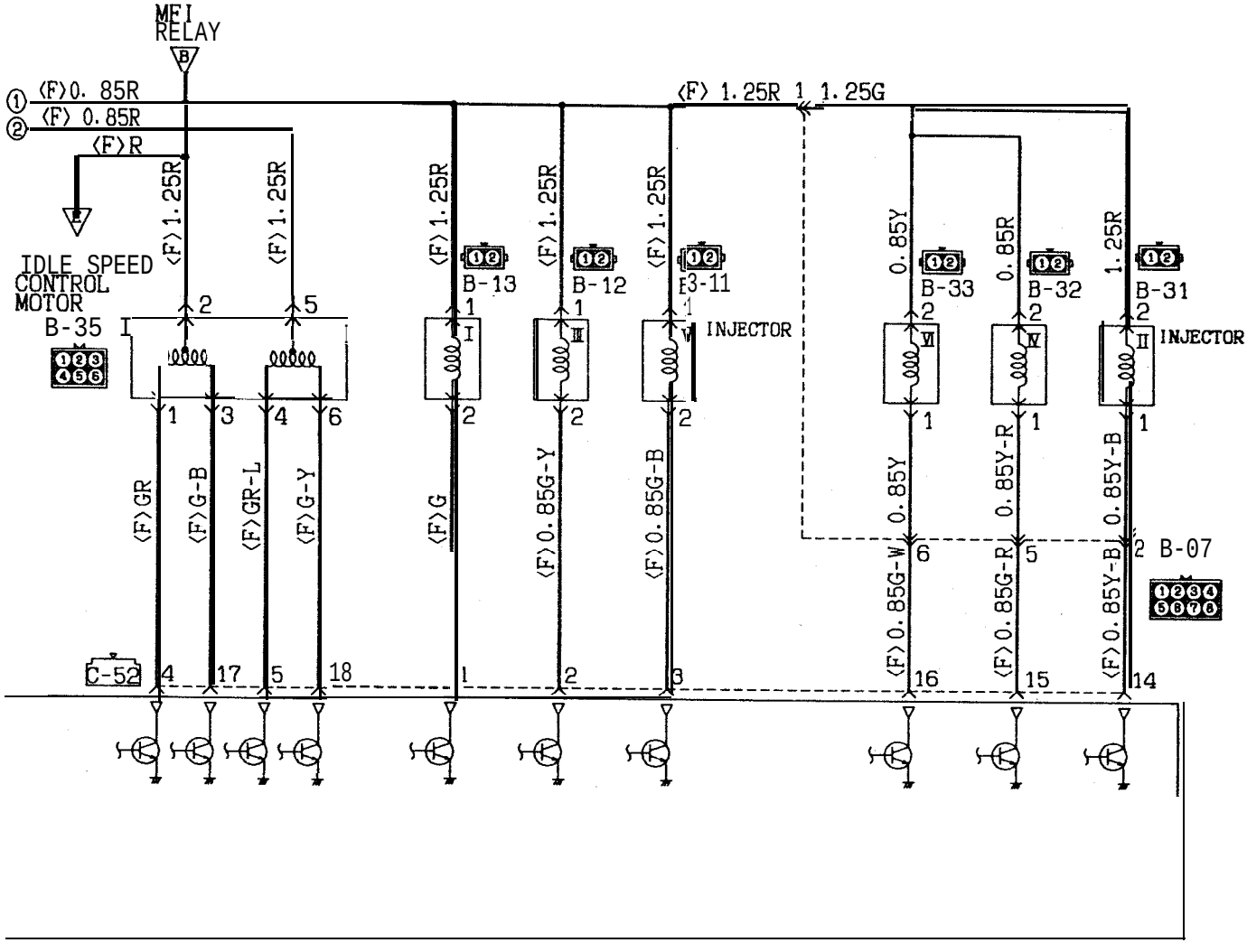

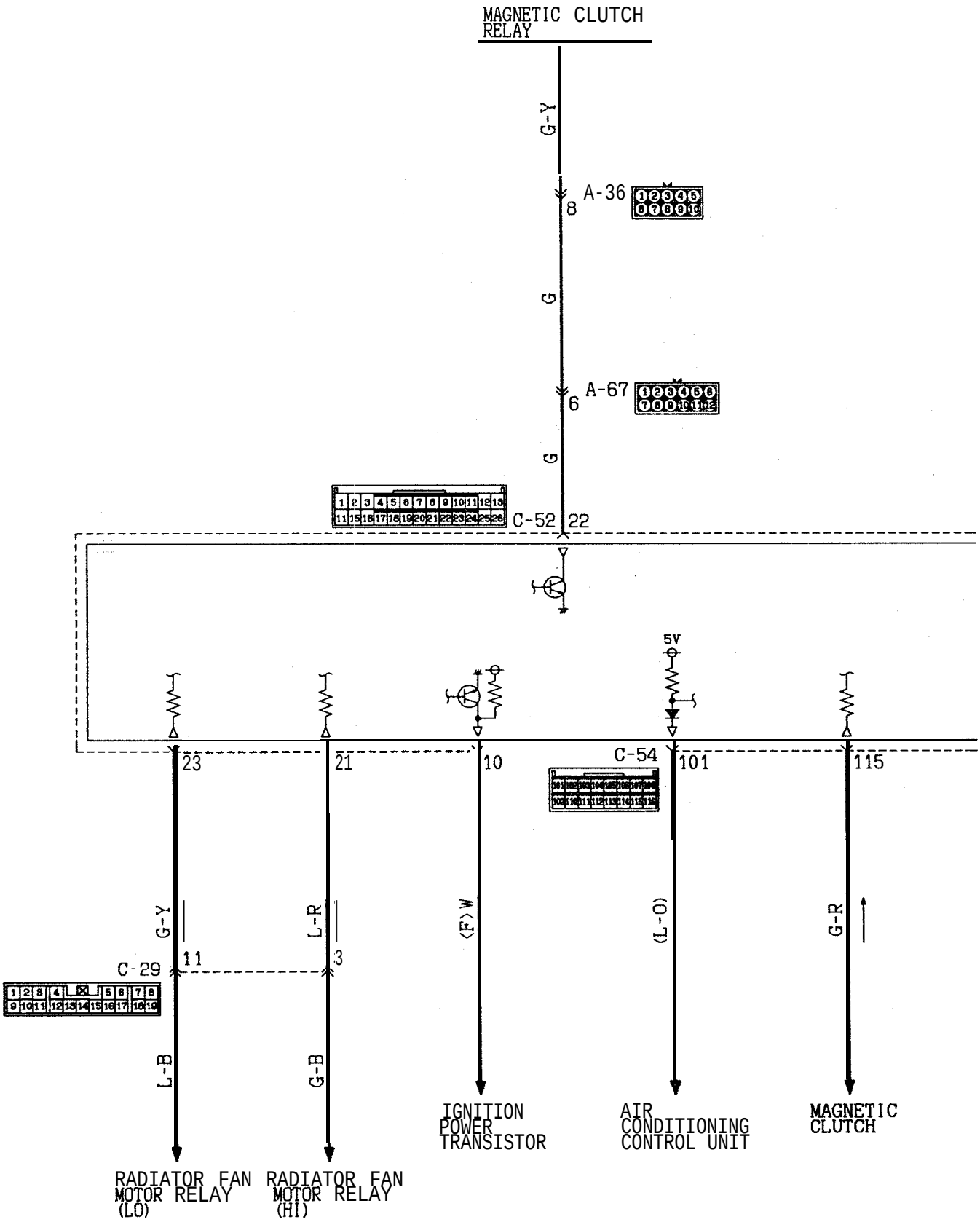
MAGNETIC CLUTCH RELAY
G-Y
A-36
8
G
A-67
6
G
C-52
22
5V
23
21
10
C-54
101
115
G-Y
L-R
(F) W
(L-O)
G-R
C-29
11
3
L-B
G-B
IGNITION POWER TRANSISTOR
AIR CONDITIONING CONTROL UNIT
MAGNETIC CLUTCH
RADIATOR FAN MOTOR RELAY (LO)
RADIATOR FAN MOTOR RELAY (HI)

CIRCUIT DIAGRAM <SOHC> (CONTINUED)

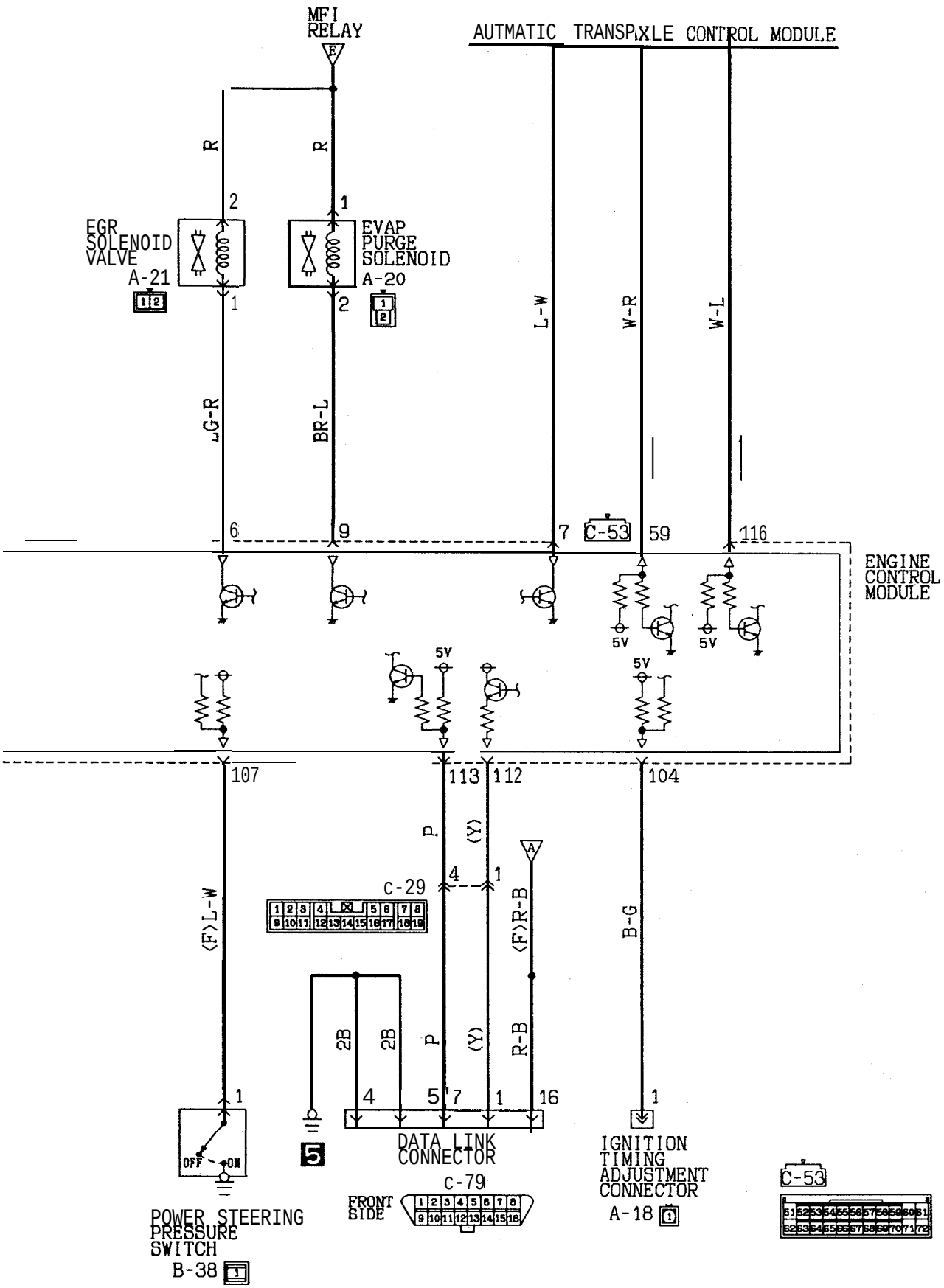

CIRCUIT DIAGRAM <SOHC>

(CALIFORNIA)

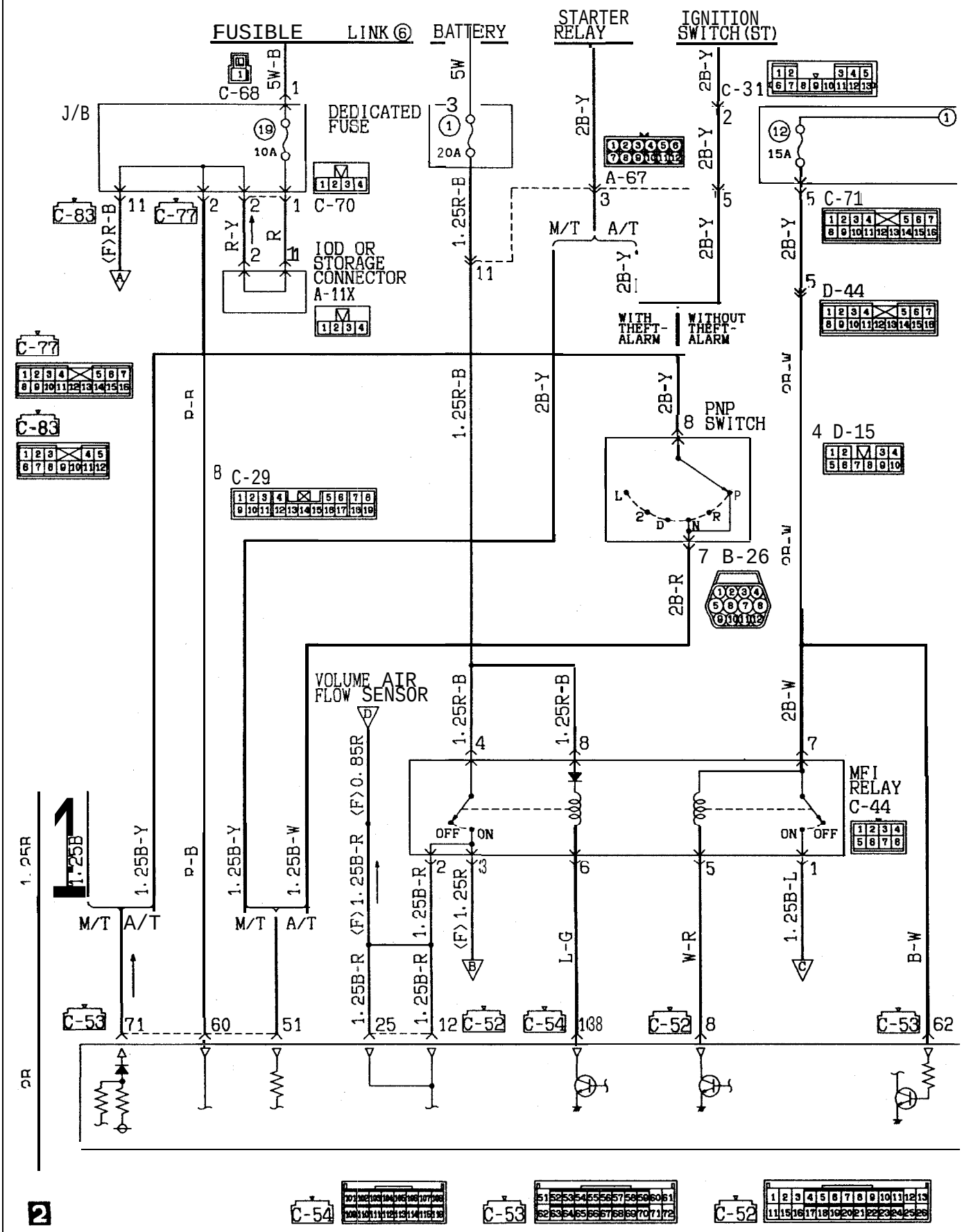

KX35-AC-R0502-M4C

CIRCUIT DIAGRAM <SOHC> (CONTINUED)

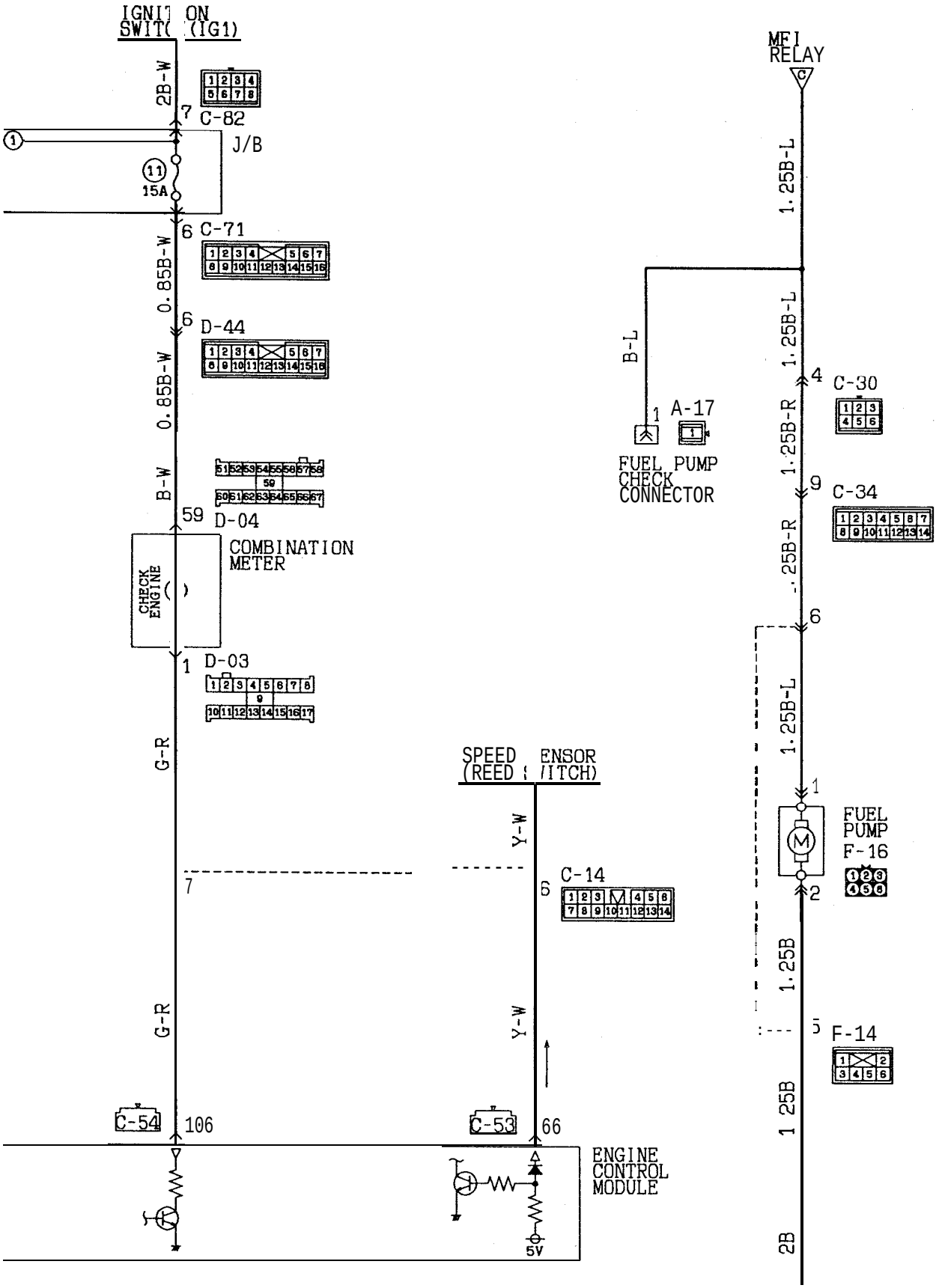

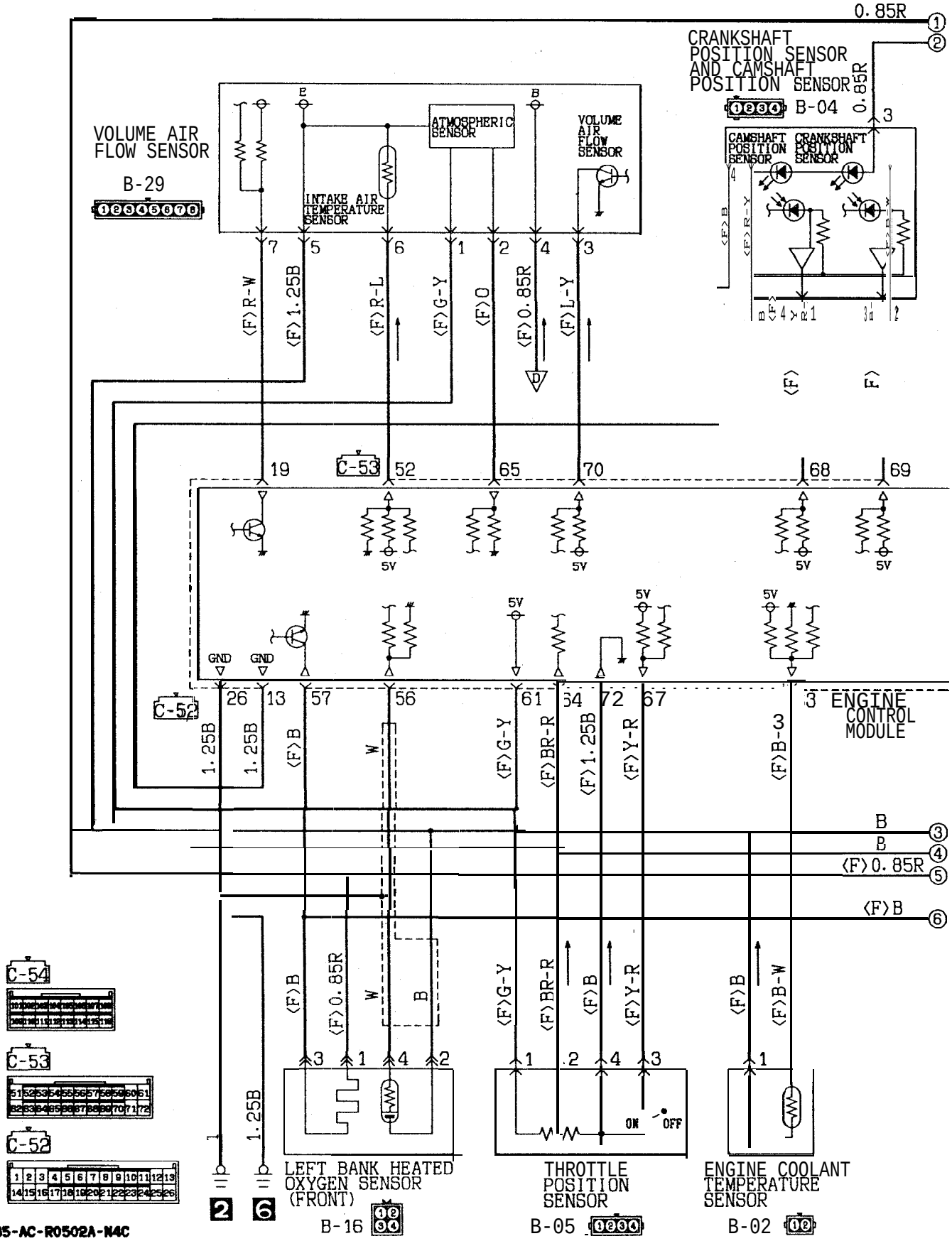
VOLUME AIR FLOW SENSOR
B-29
ATMOSPHERIC SENSOR
INTAKE AIR TEMPERATURE SENSOR
VOLUME AIR FLOW SENSOR
CRANKSHAFT POSITION SENSOR AND CAMSHAFT POSITION SENSOR
B-04
CAMSHAFT POSITION SENSOR
CRANKSHAFT POSITION SENSOR
0.85R
C-53
C-52
ENGINE CONTROL MODULE
5V
GND
C-54
LEFT BANK HEATED OXYGEN SENSOR (FRONT)
B-16
THROTTLE POSITION SENSOR
B-05
ON
OFF
ENGINE COOLANT TEMPERATURE SENSOR
B-02

CIRCUIT DIAGRAM <SOHC> (CONTINUED)

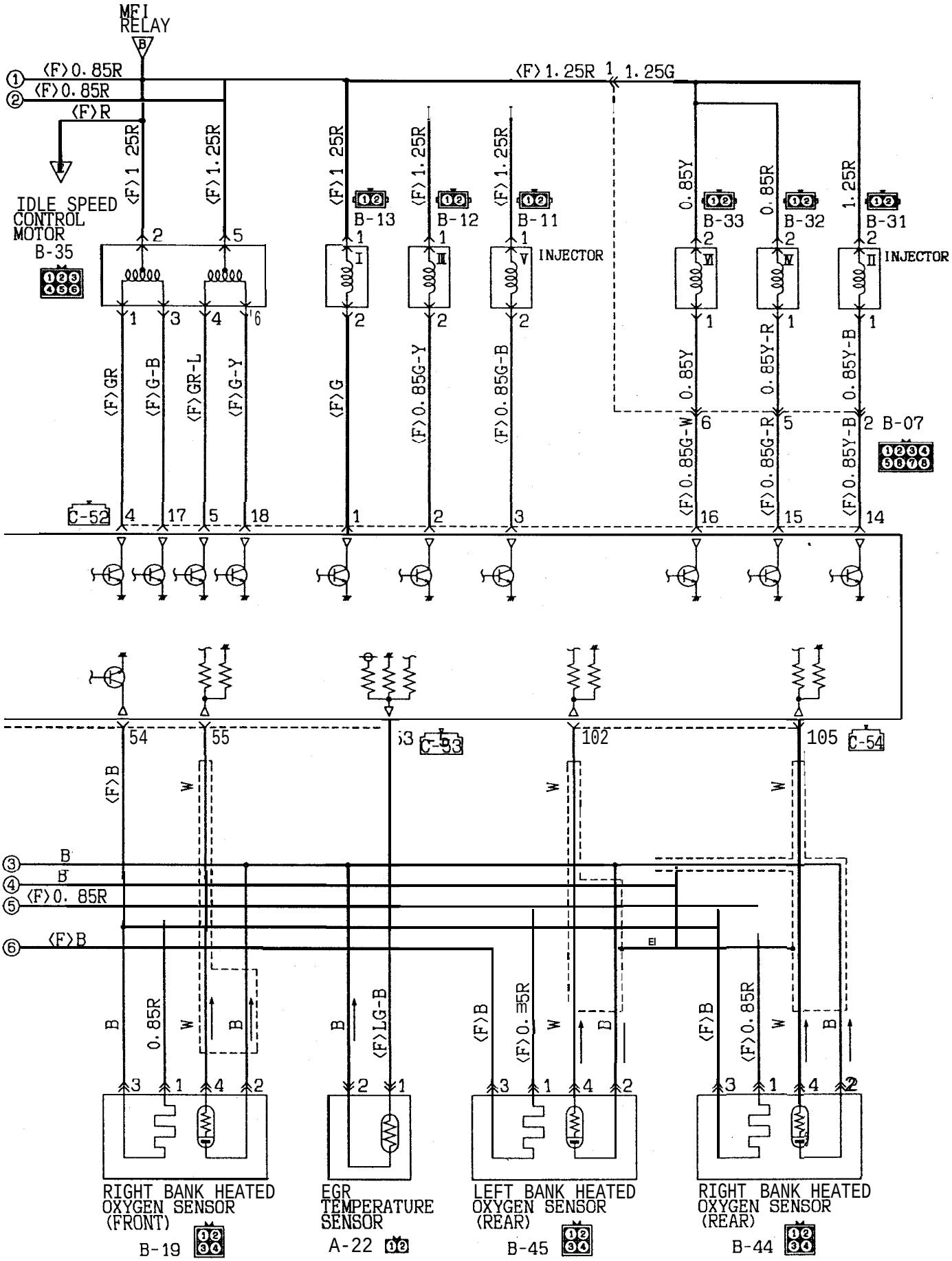

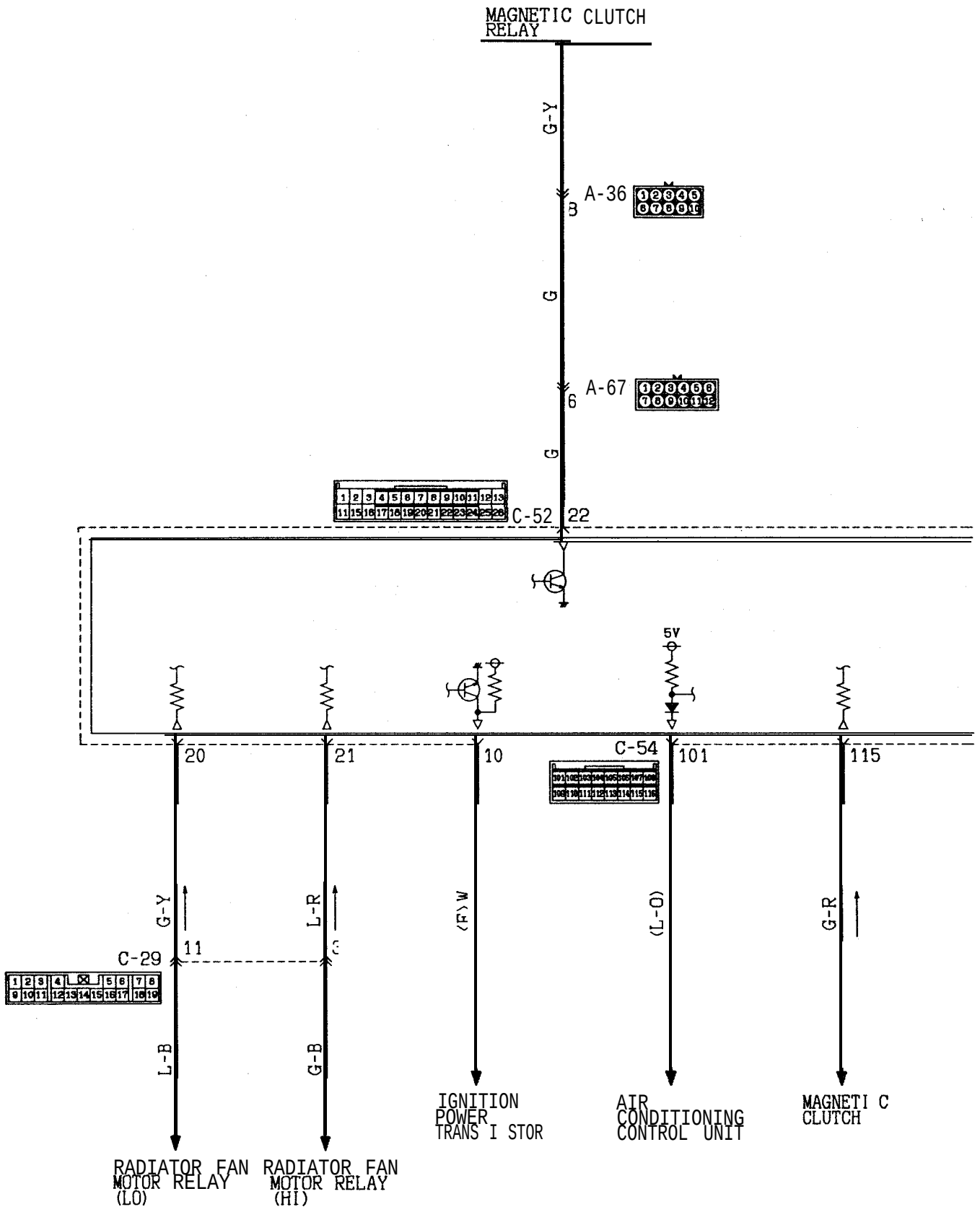
MAGNETIC CLUTCH RELAY
G-Y
A-36
3
G
A-67
6
G
C-52
22
5V
20
21
10
C-54
101
115
G-Y
L-R
(F) W
(L-O)
G-R
C-29
11
L-B
G-B
IGNITION POWER TRANS I STOR
AIR CONDITIONING CONTROL UNIT
MAGNETI C CLUTCH
RADIATOR FAN MOTOR RELAY (LO)
RADIATOR FAN MOTOR RELAY (HI)

CIRCUIT DIAGRAM <SOHC> (CONTINUED)

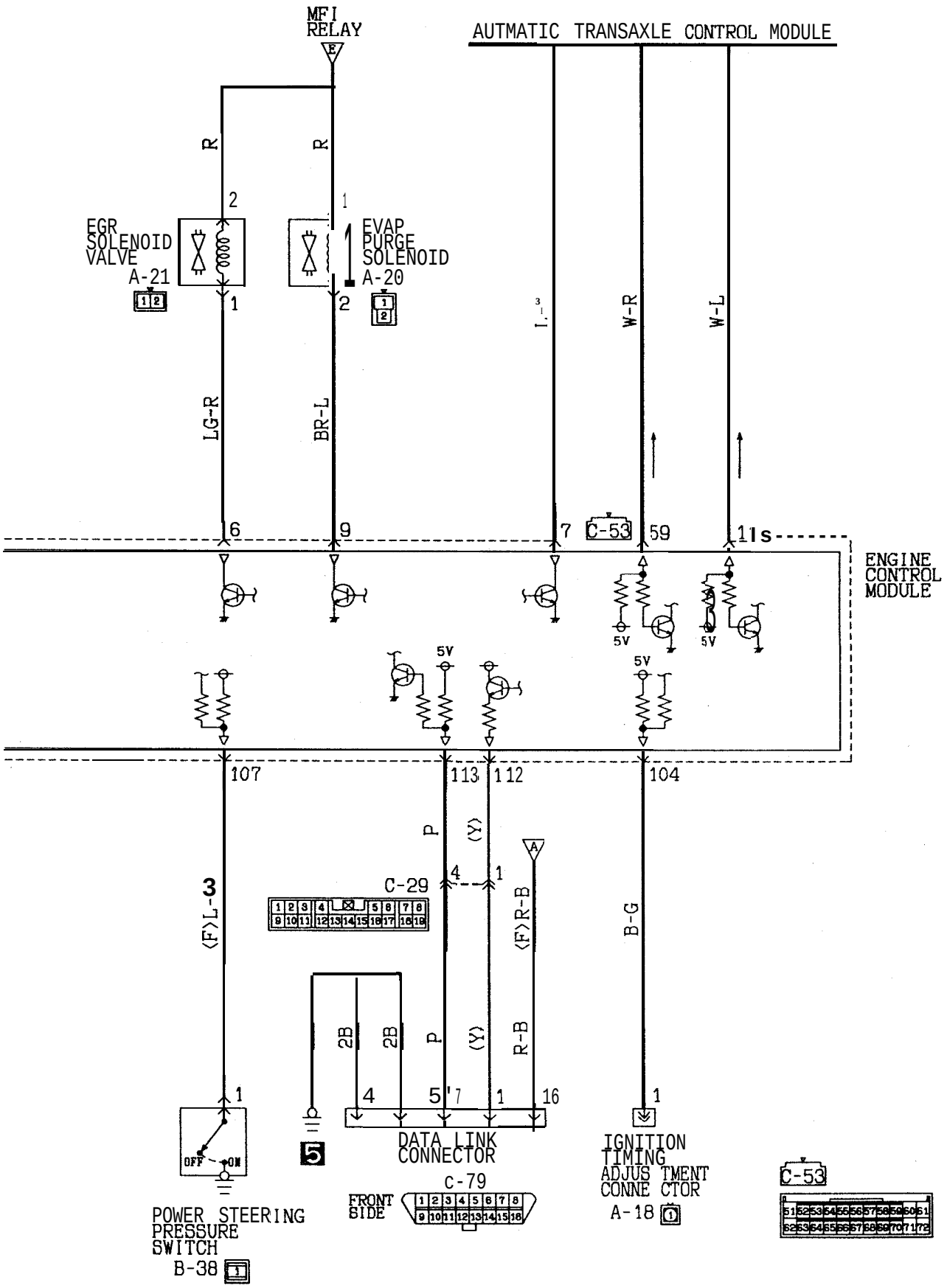

CIRCUIT DIAGRAM <Non-Turbo>

(FEDERAL AND CANADA)

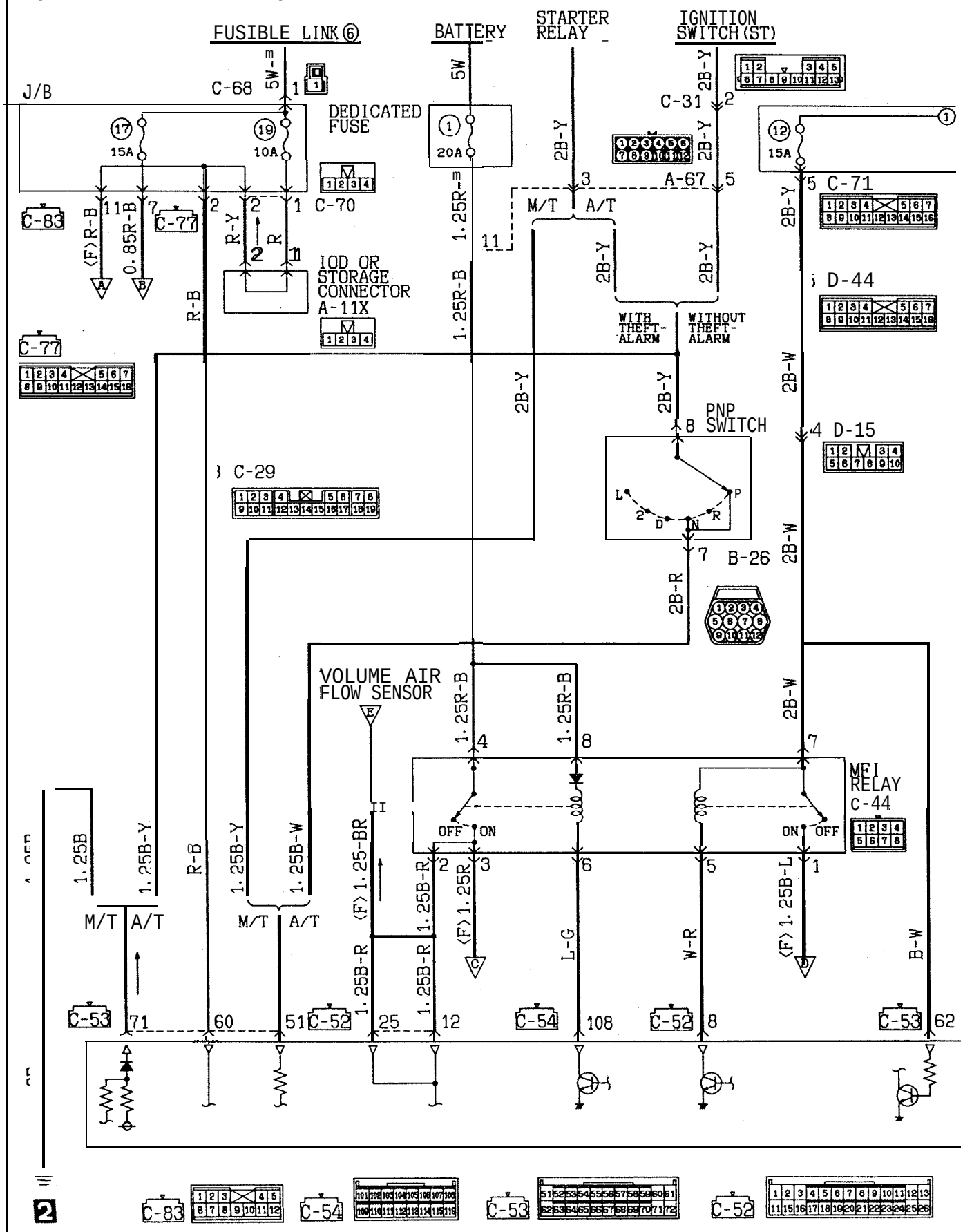

2

CIRCUIT DIAGRAM <Non-Turbo> (CONTINUED)

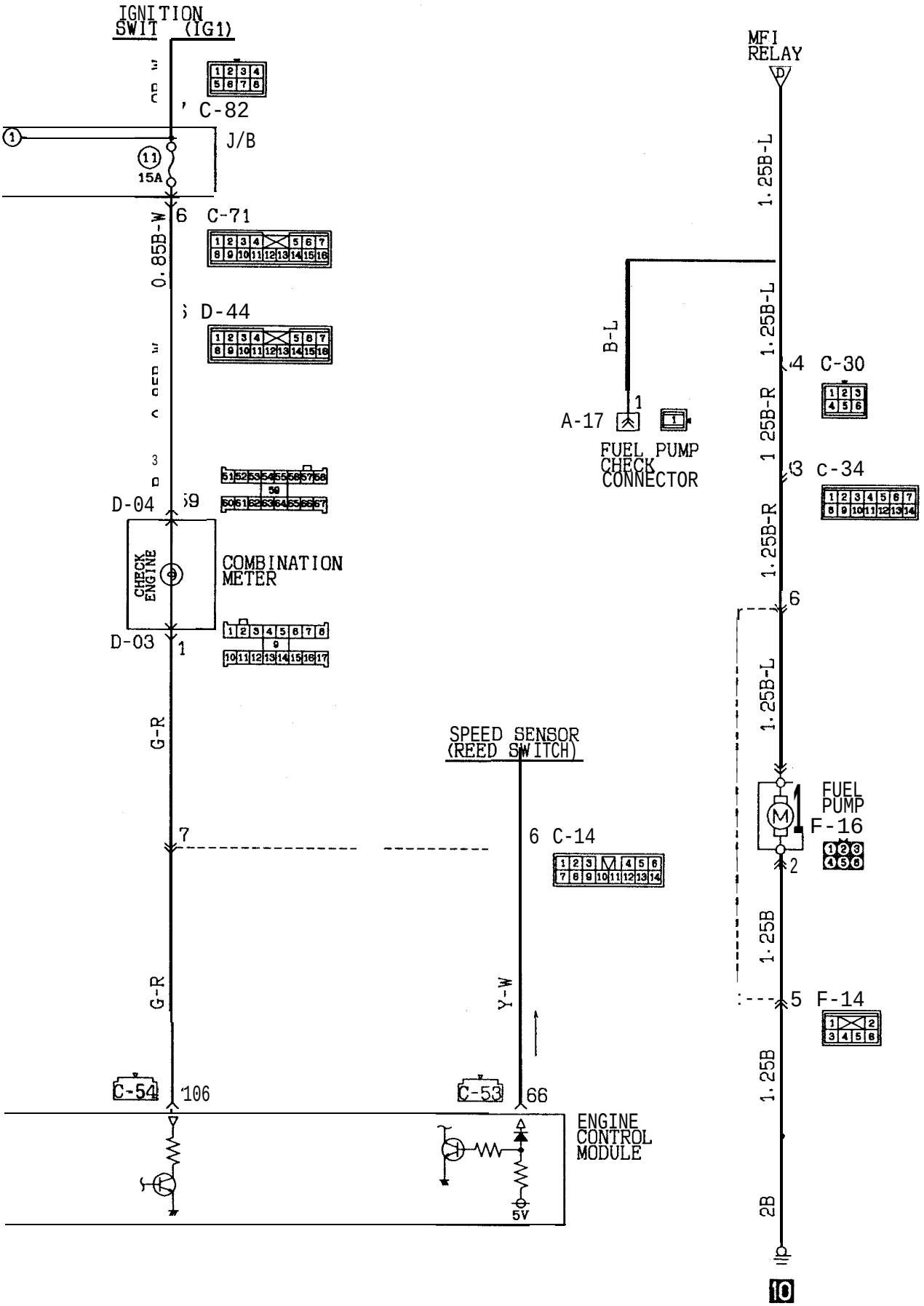

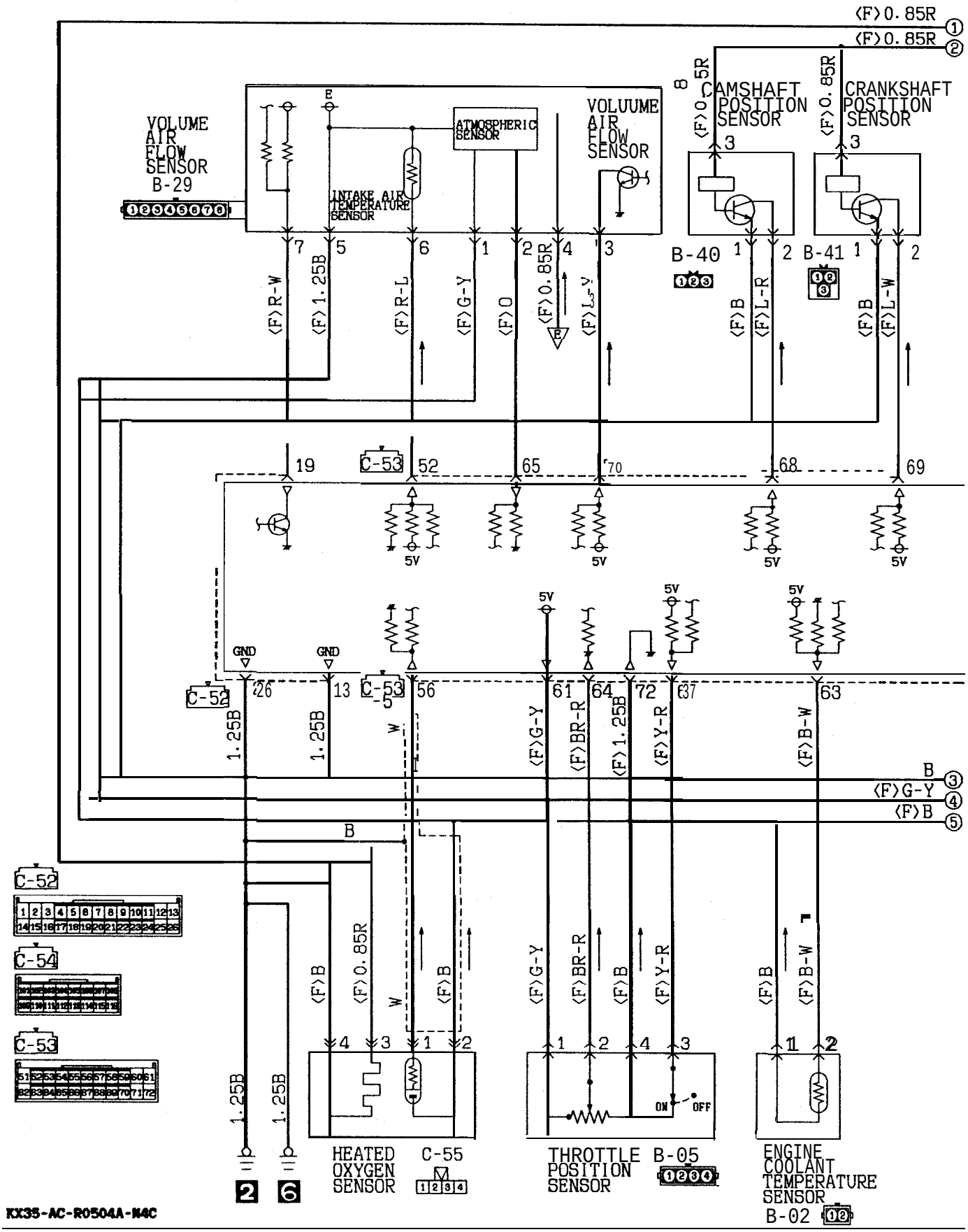
VOLUME AIR FLOW SENSOR B-29
ATMOSPHERIC SENSOR
INTAKE AIR TEMPERATURE SENSOR
VOLUUME AIR FLOW SENSOR
CAMSHAFT POSITION SENSOR
CRANKSHAFT POSITION SENSOR
B-40
B-41
C-53
C-52
C-54
C-55
B-05
B-02
HEATED OXYGEN SENSOR
THROTTLE POSITION SENSOR
ENGINE COOLANT TEMPERATURE SENSOR
ON
OFF
5V
GND
KX35-AC-R0504A-N4C

CIRCUIT DIAGRAM <Non-Turbo> (CONTINUED)

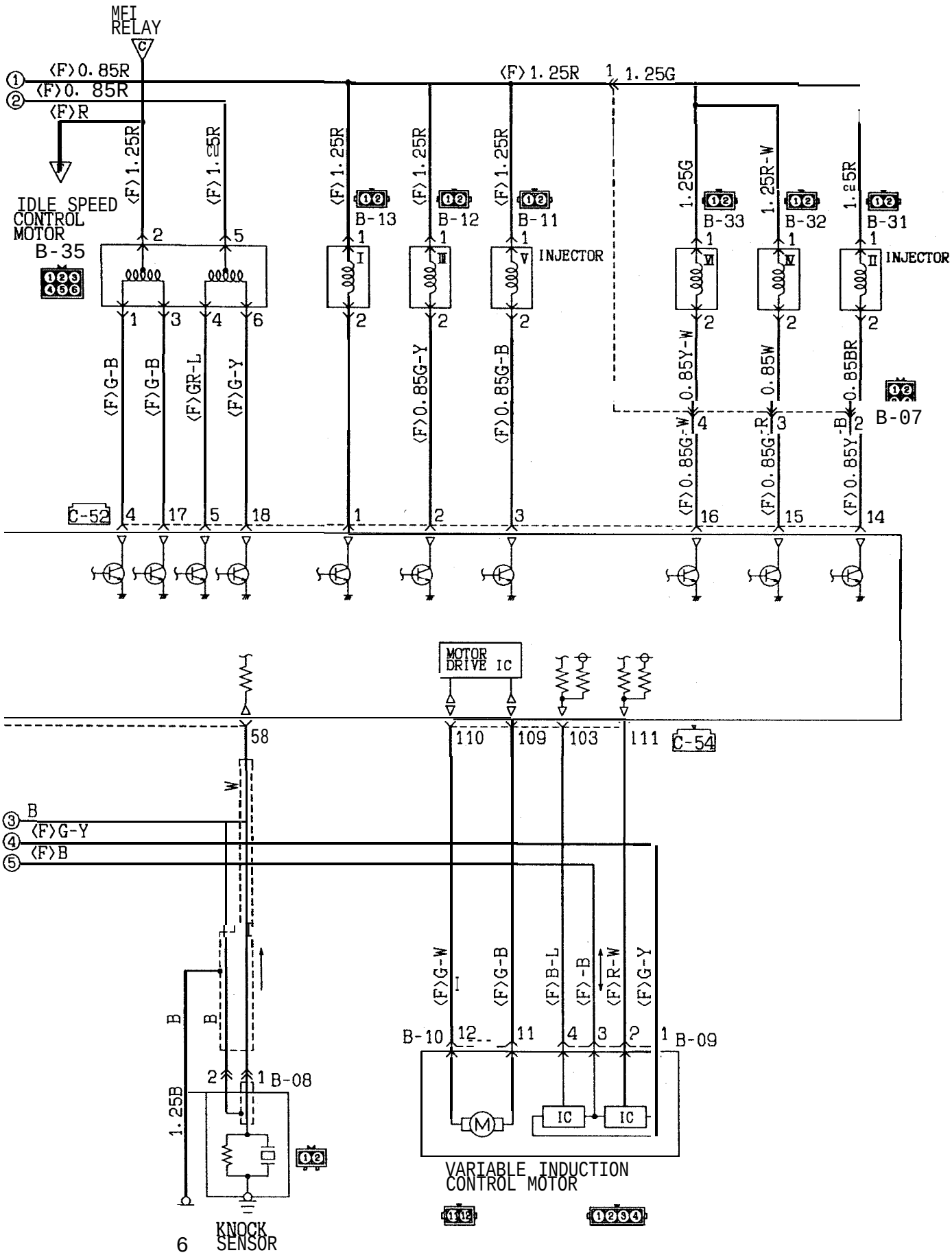

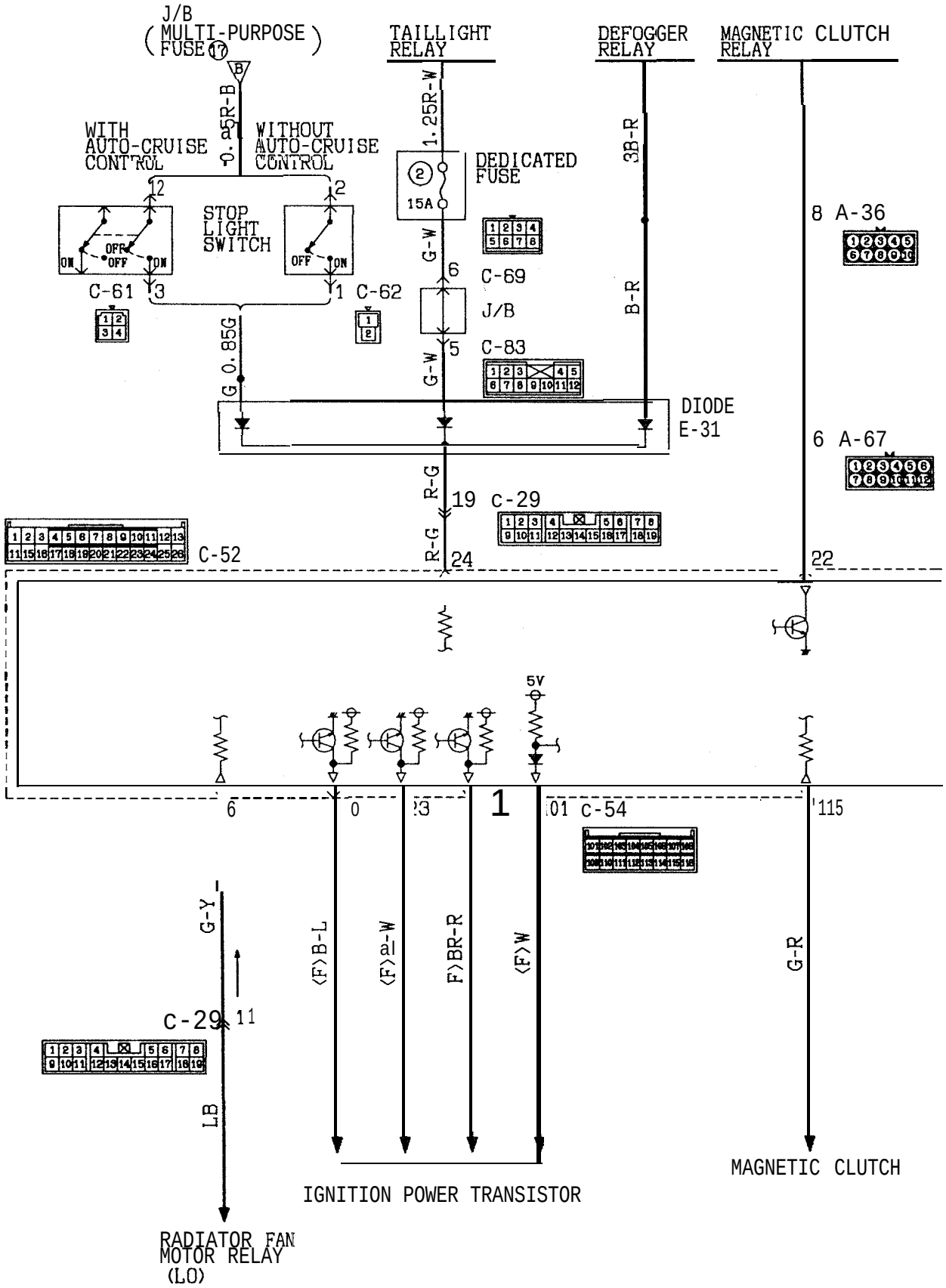
J/B
(MULTI-PURPOSE FUSE 17)
TAILLIGHT RELAY
DEFOGGER RELAY
MAGNETIC CLUTCH RELAY
WITH AUTO-CRUISE CONTROL
WITHOUT AUTO-CRUISE CONTROL
STOP LIGHT SWITCH
DEDICATED FUSE
15A
C-61
C-62
C-69
J/B
C-83
DIODE E-31
8 A-36
6 A-67
C-52
C-29
C-54
5V
IGNITION POWER TRANSISTOR
MAGNETIC CLUTCH
RADIATOR FAN MOTOR RELAY (LO)

CIRCUIT DIAGRAM <Non-Turbo> (CONTINUED)

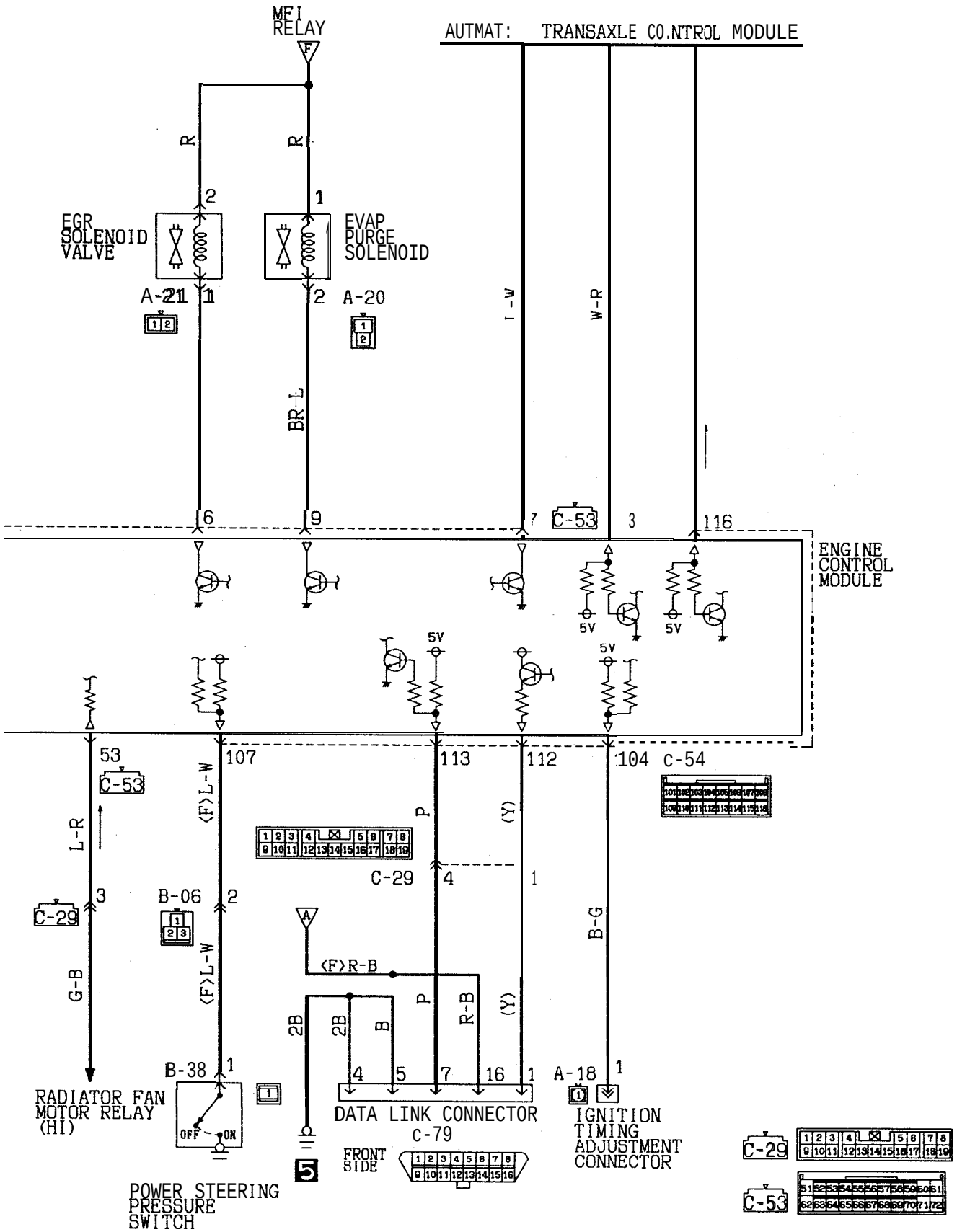

CIRCUIT DIAGRAM <Non-Turbo>

(CALIFORNIA)

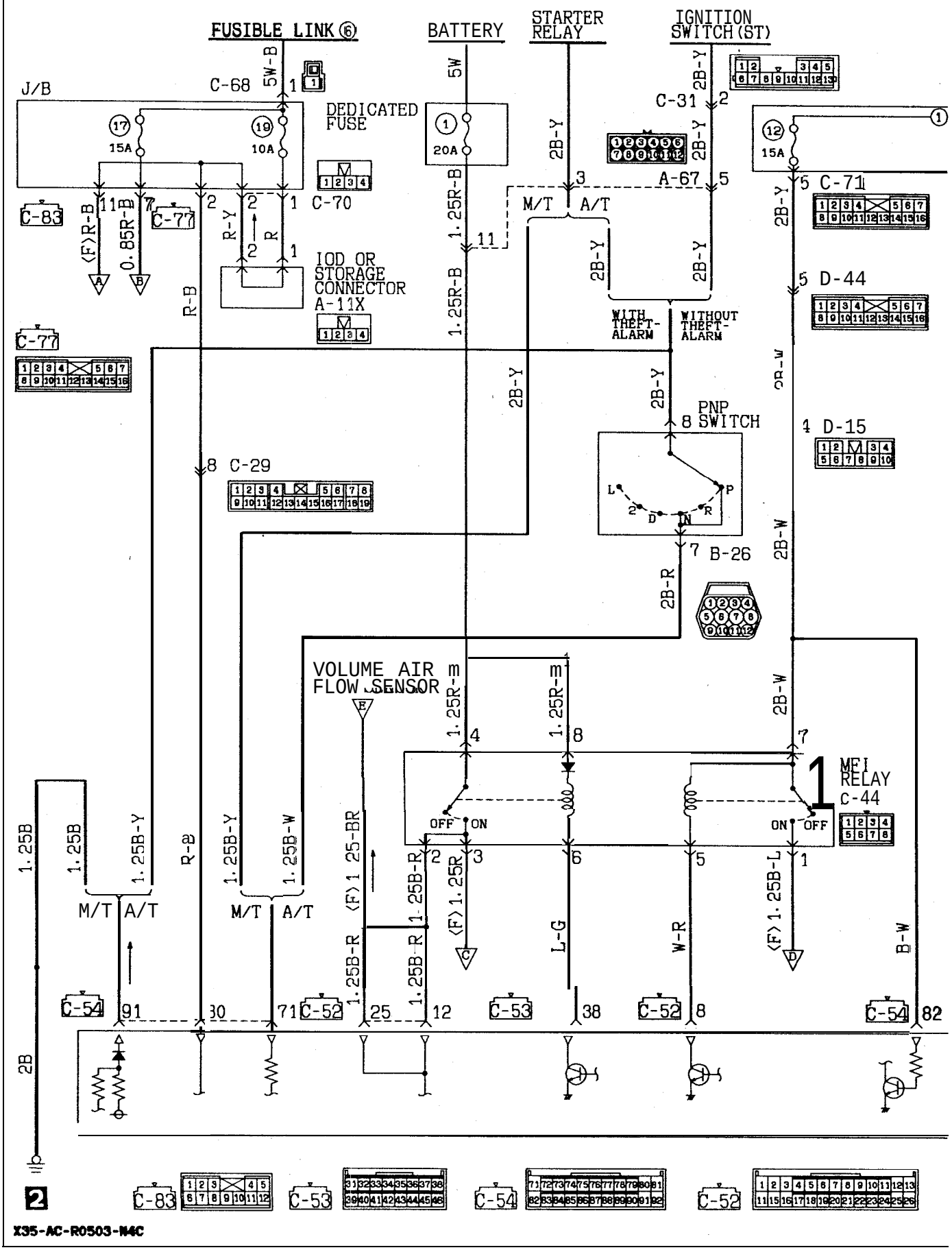

CIRCUIT DIAGRAM <Non-Turbo> (CONTINUED)

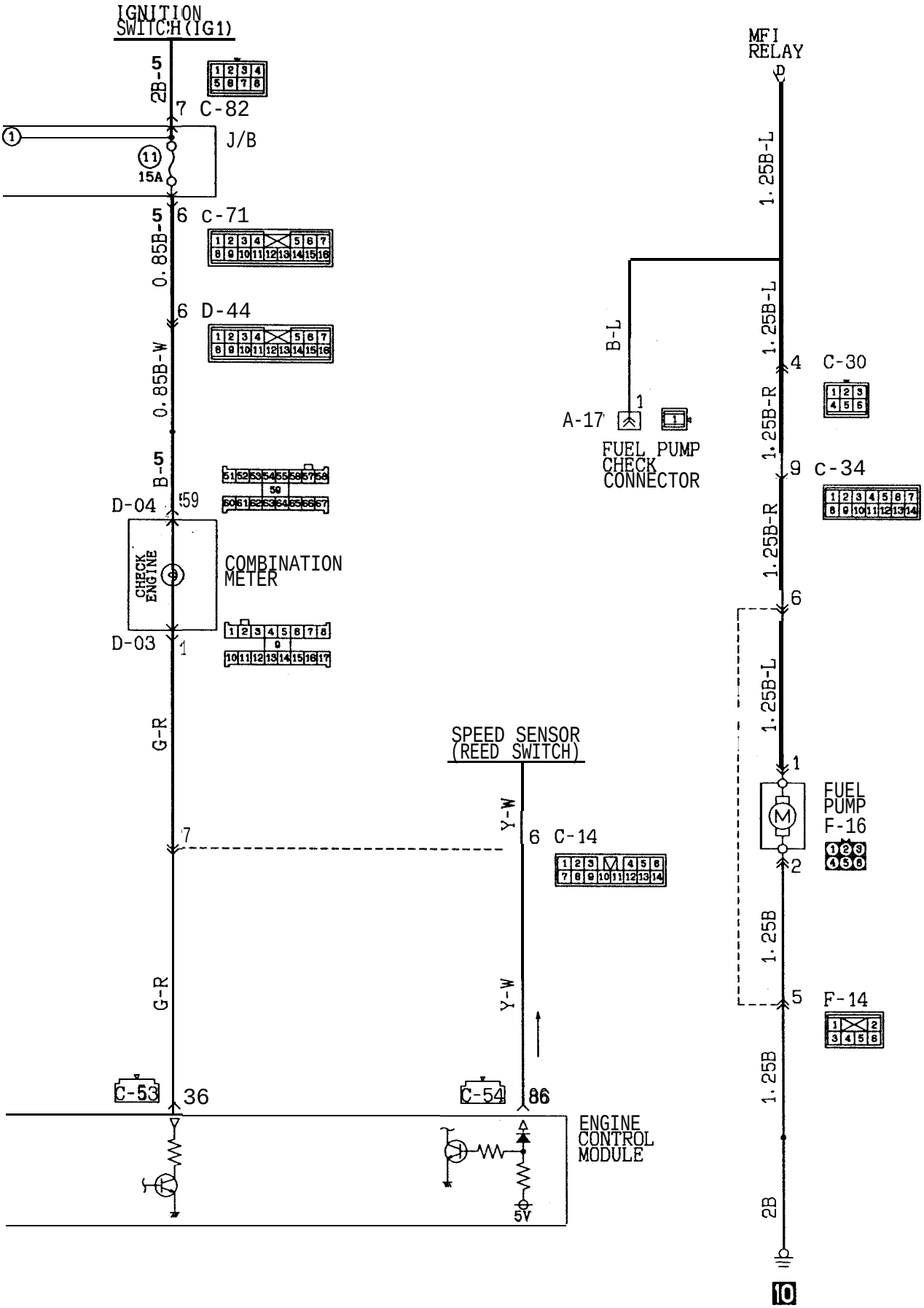

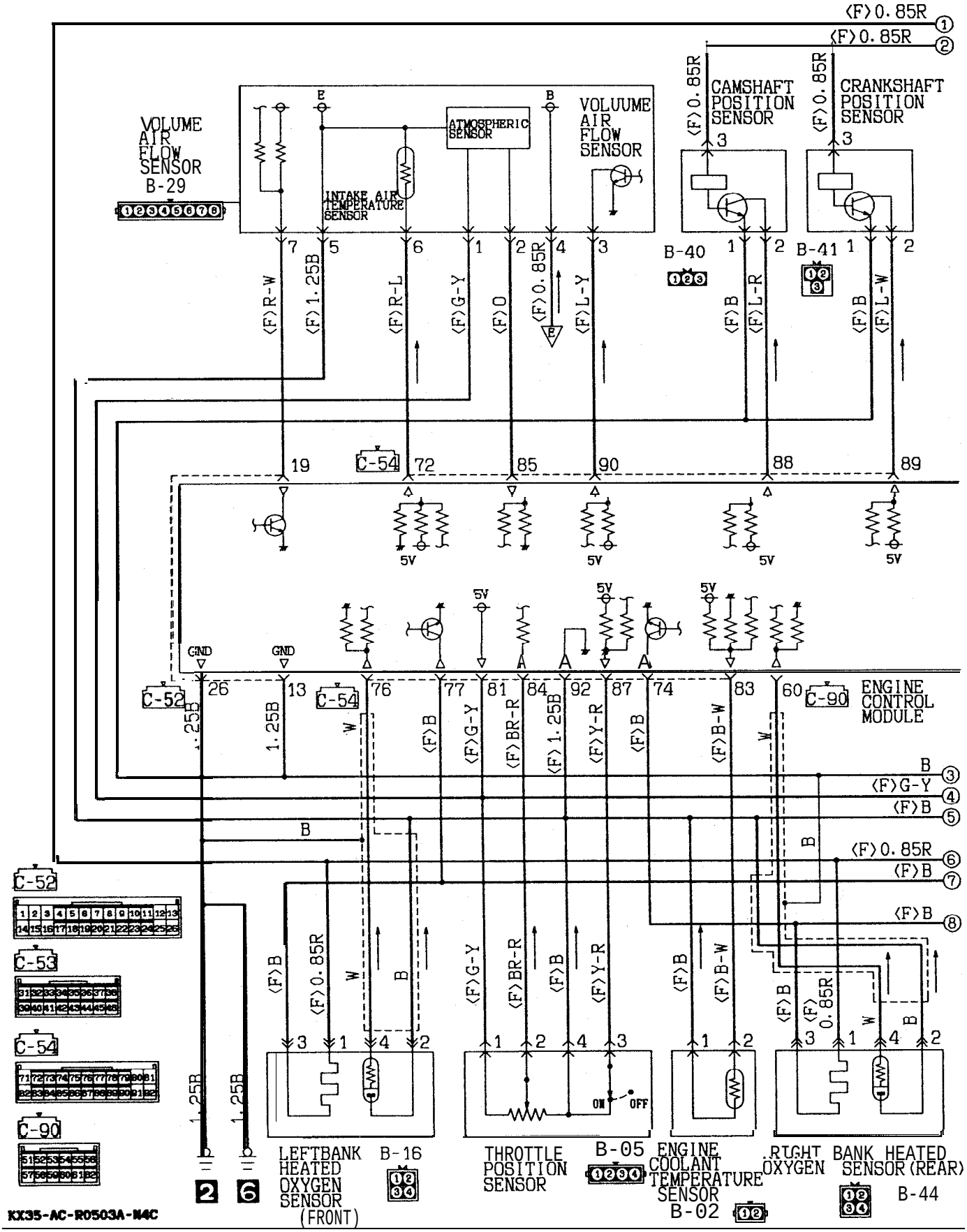
VOLUME AIR FLOW SENSOR B-29
ATMOSPHERIC SENSOR
INTAKE AIR TEMPERATURE SENSOR
VOLUUME AIR FLOW SENSOR
CAMSHAFT POSITION SENSOR
CRANKSHAFT POSITION SENSOR
B-40
B-41
C-54
C-52
C-90
ENGINE CONTROL MODULE
5V
GND
C-53
LEFTBANK HEATED OXYGEN SENSOR (FRONT)
B-16
THROTTLE POSITION SENSOR
B-05
ENGINE COOLANT TEMPERATURE SENSOR
B-02
RIGHT BANK HEATED OXYGEN SENSOR (REAR)
B-44
ON
OFF
KX35-AC-R0503A-N4C

CIRCUIT DIAGRAM <Non-Turbo> (CONTINUED)

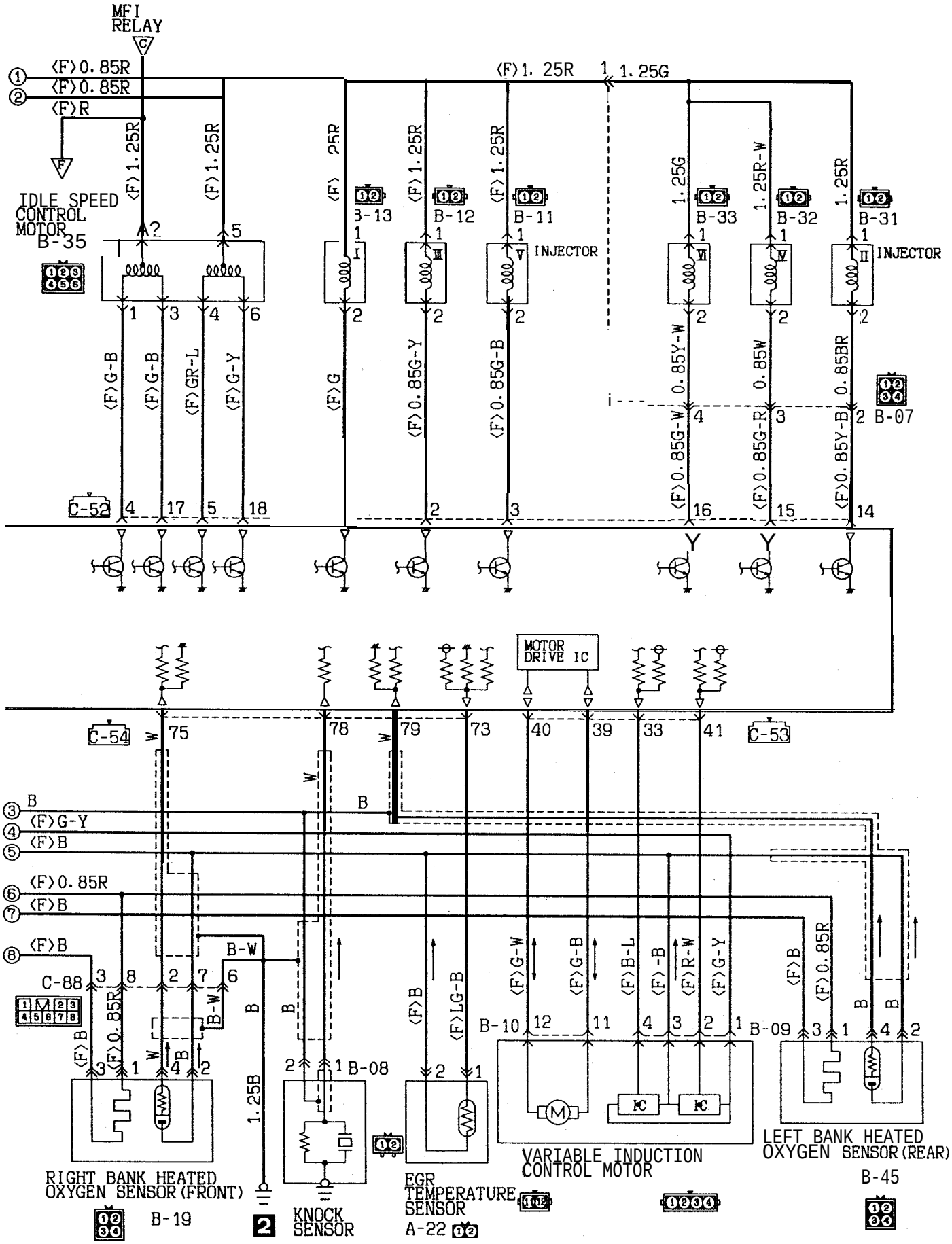

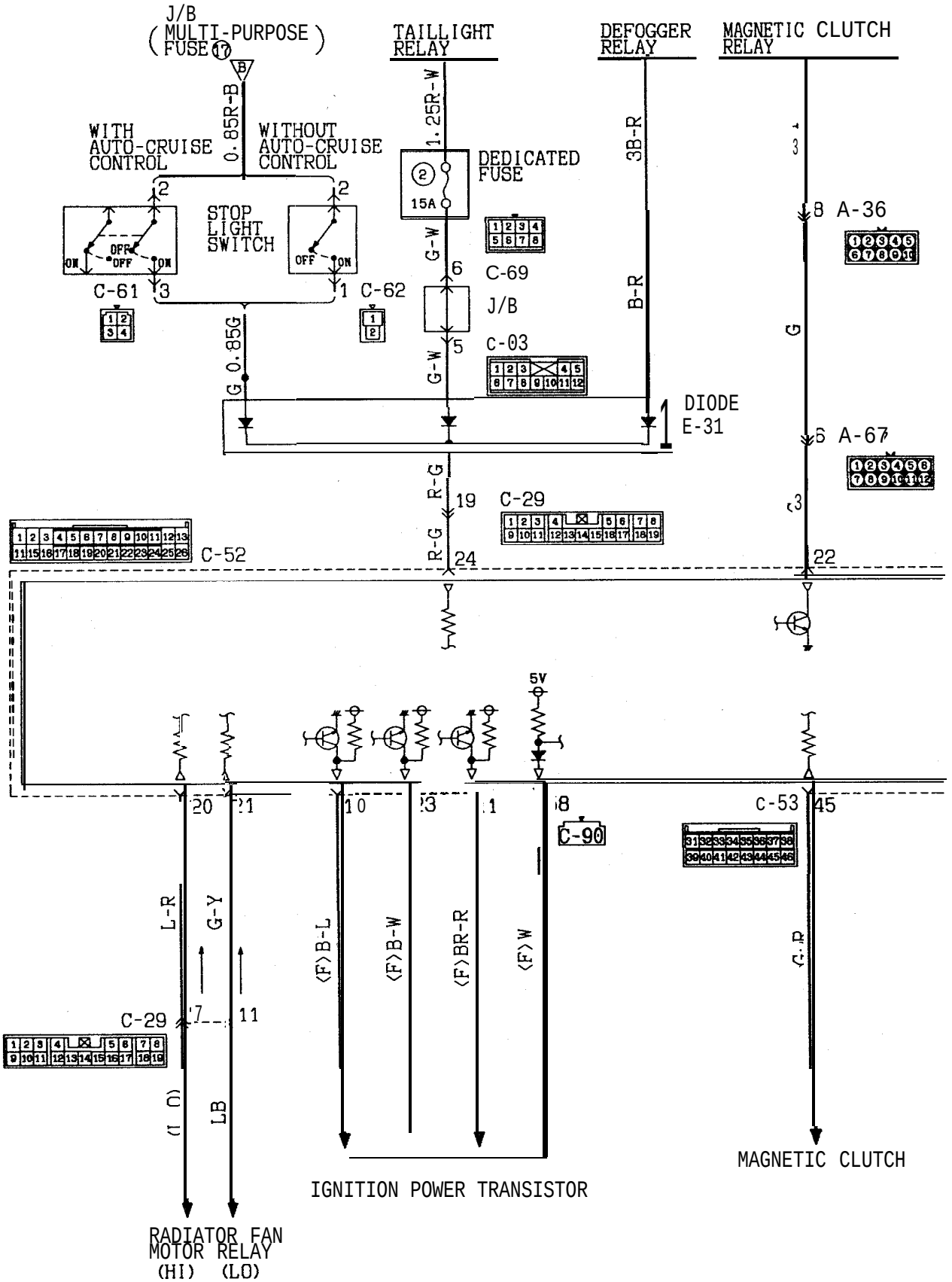
J/B
(MULTI-PURPOSE FUSE 17)
TAILLIGHT RELAY
DEFOGGER RELAY
MAGNETIC CLUTCH RELAY
WITH AUTO-CRUISE CONTROL
WITHOUT AUTO-CRUISE CONTROL
0.85R-B
1.25R-W
DEDICATED FUSE
15A
3B-R
STOP LIGHT SWITCH
C-61
C-62
G-W
C-69
J/B
C-03
G 0.85G
B-R
G
A-36
A-67
DIODE E-31
R-G
C-29
C-52
5V
C-90
C-53
L-R
G-Y
(F)B-L
(F)B-W
(F)BR-R
(F)W
LB
IGNITION POWER TRANSISTOR
MAGNETIC CLUTCH
RADIATOR FAN MOTOR RELAY
(HI) (LO)

CIRCUIT DIAGRAM <Non-Turbo> (CONTINUED)

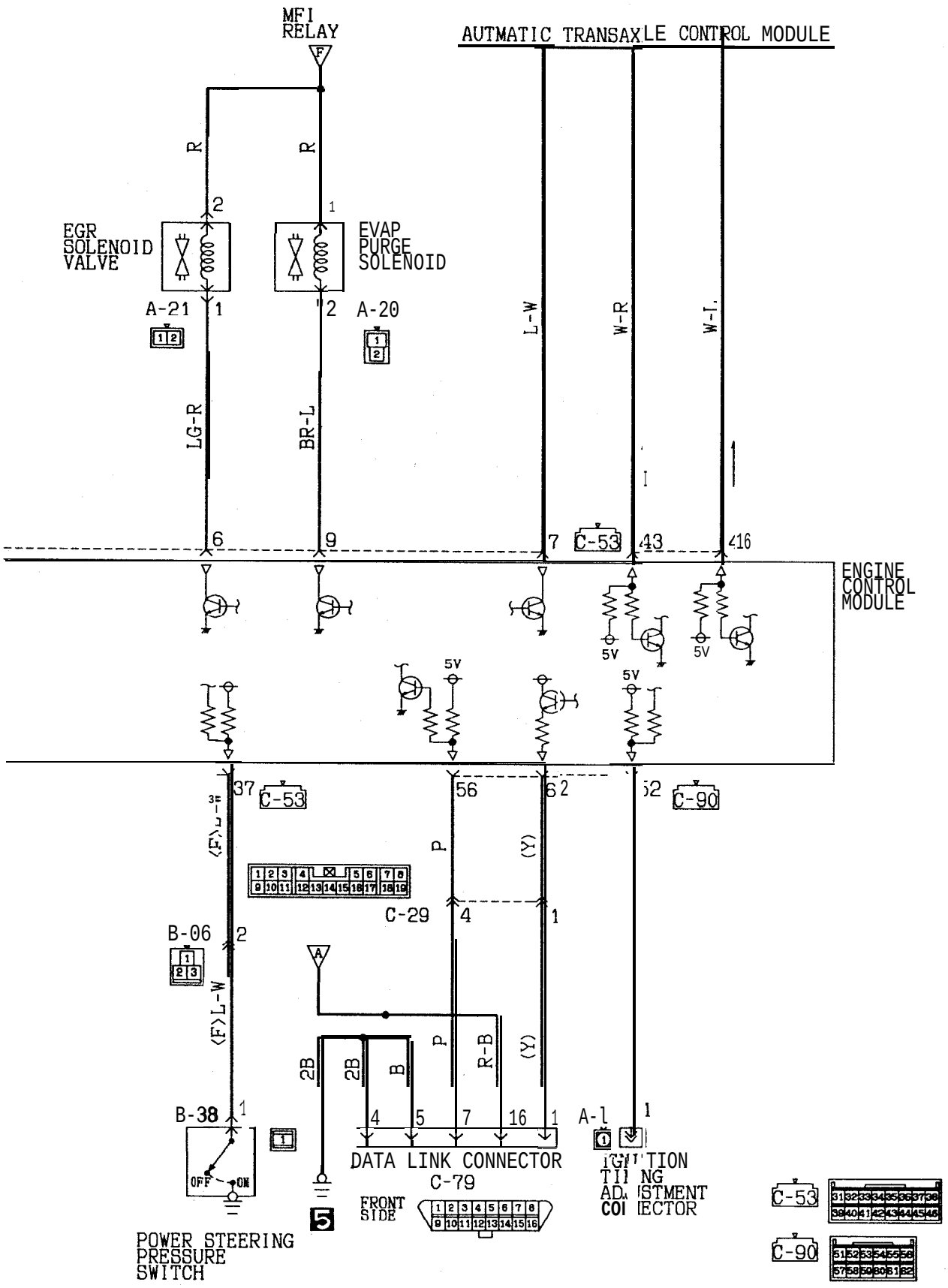

CIRCUIT DIAGRAM <Turbo>

(FEDERAL)

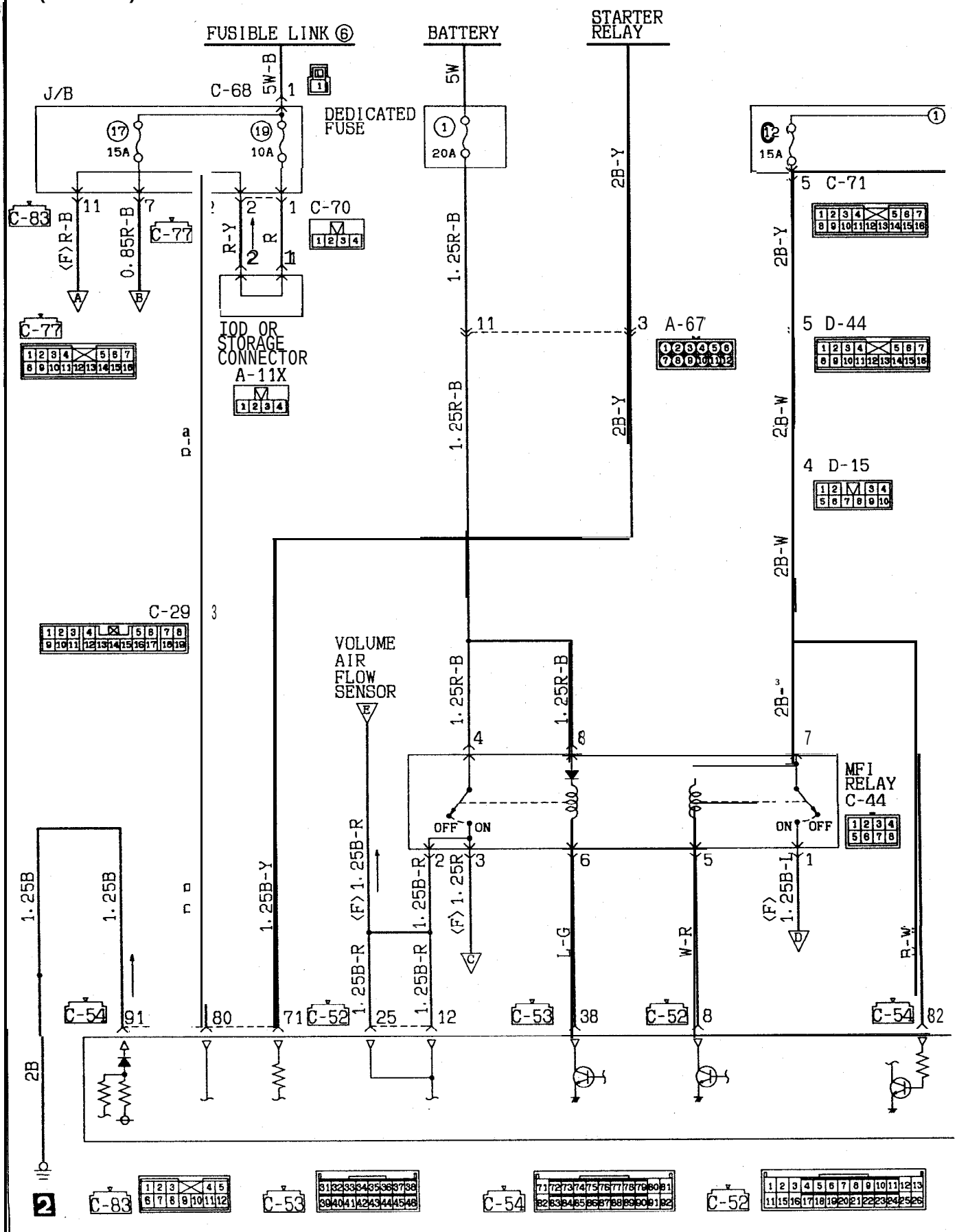

CIRCUIT DIAGRAM <Turbo> (CONTINUED)

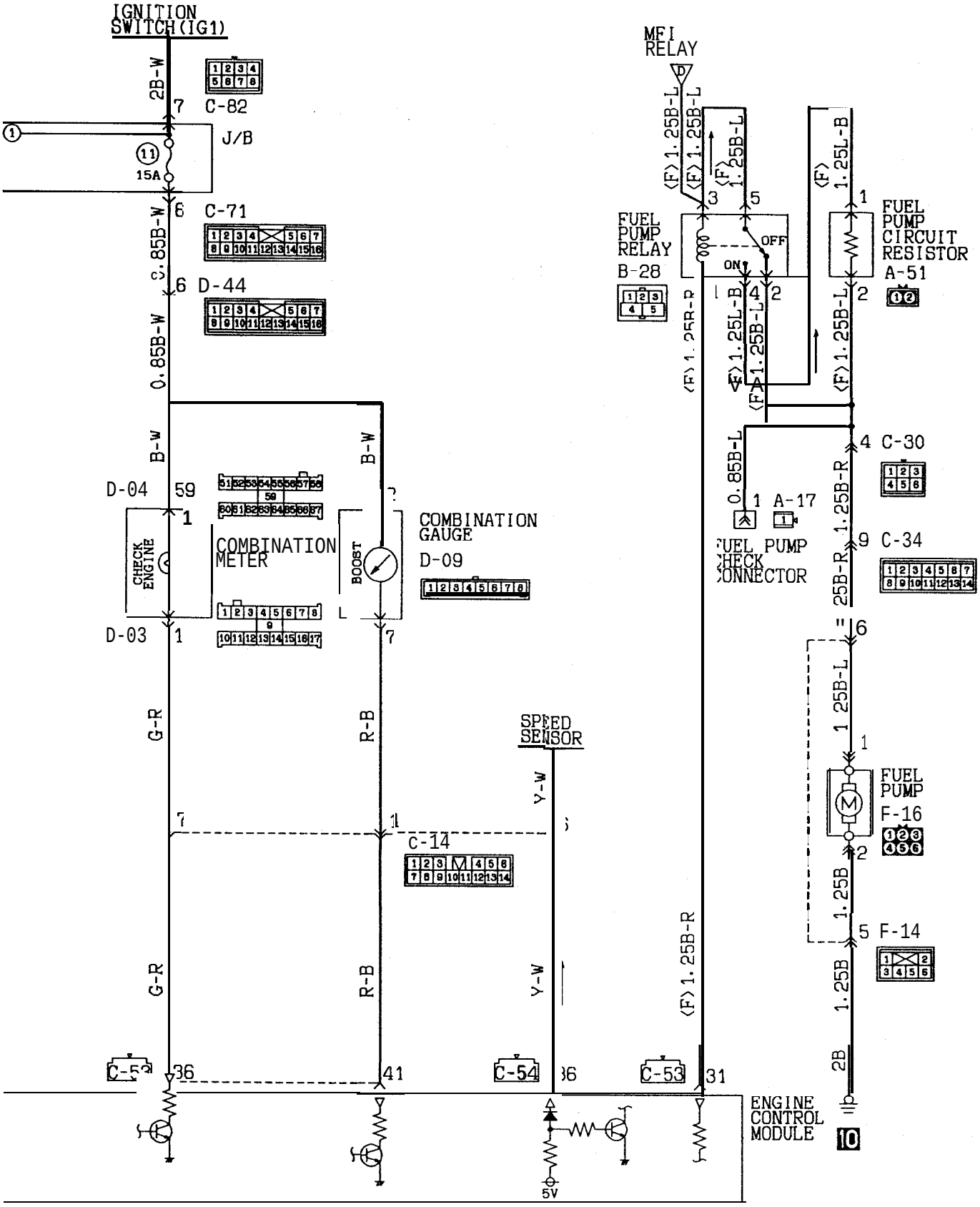

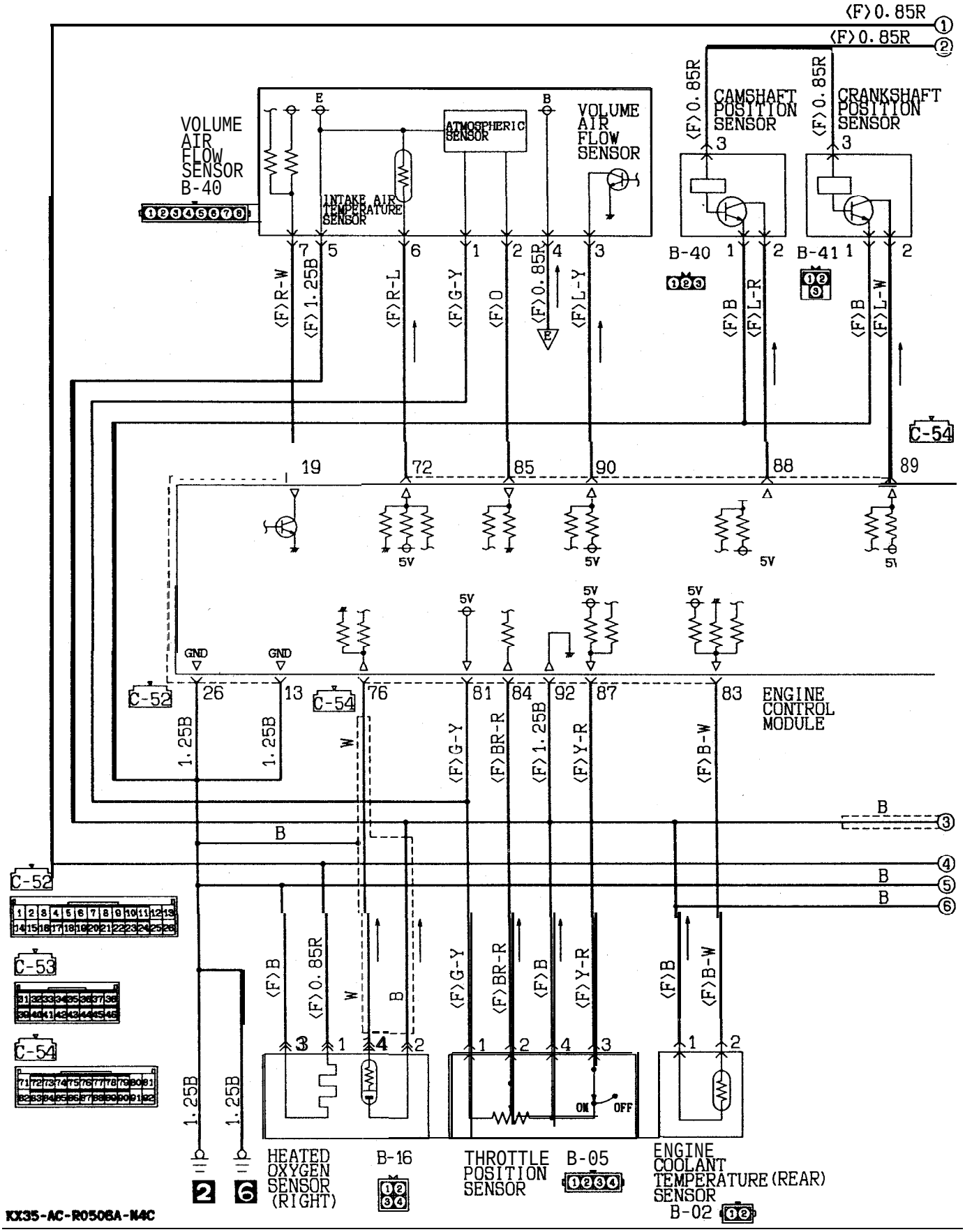
VOLUME AIR FLOW SENSOR B-40
ATMOSPHERIC SENSOR
INTAKE AIR TEMPERATURE SENSOR
VOLUME AIR FLOW SENSOR
CAMSHAFT POSITION SENSOR
CRANKSHAFT POSITION SENSOR
B-40
B-41
C-54
C-52
C-53
ENGINE CONTROL MODULE
HEATED OXYGEN SENSOR (RIGHT)
B-16
THROTTLE POSITION SENSOR
B-05
ENGINE COOLANT TEMPERATURE (REAR) SENSOR
B-02
ON
OFF
5V
GND
KX35-AC-R0506A-N4C

CIRCUIT DIAGRAM <Turbo> (CONTINUED)

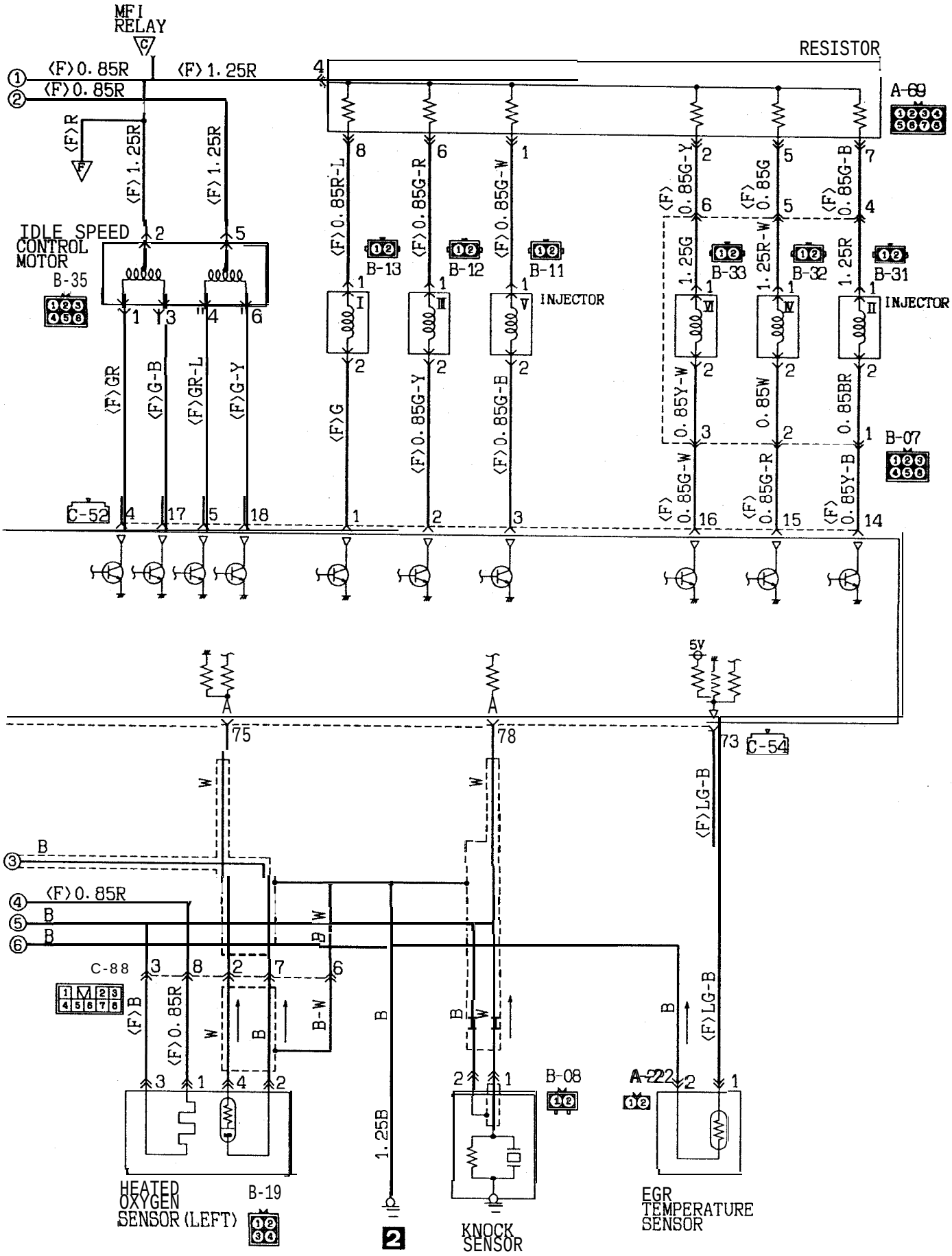

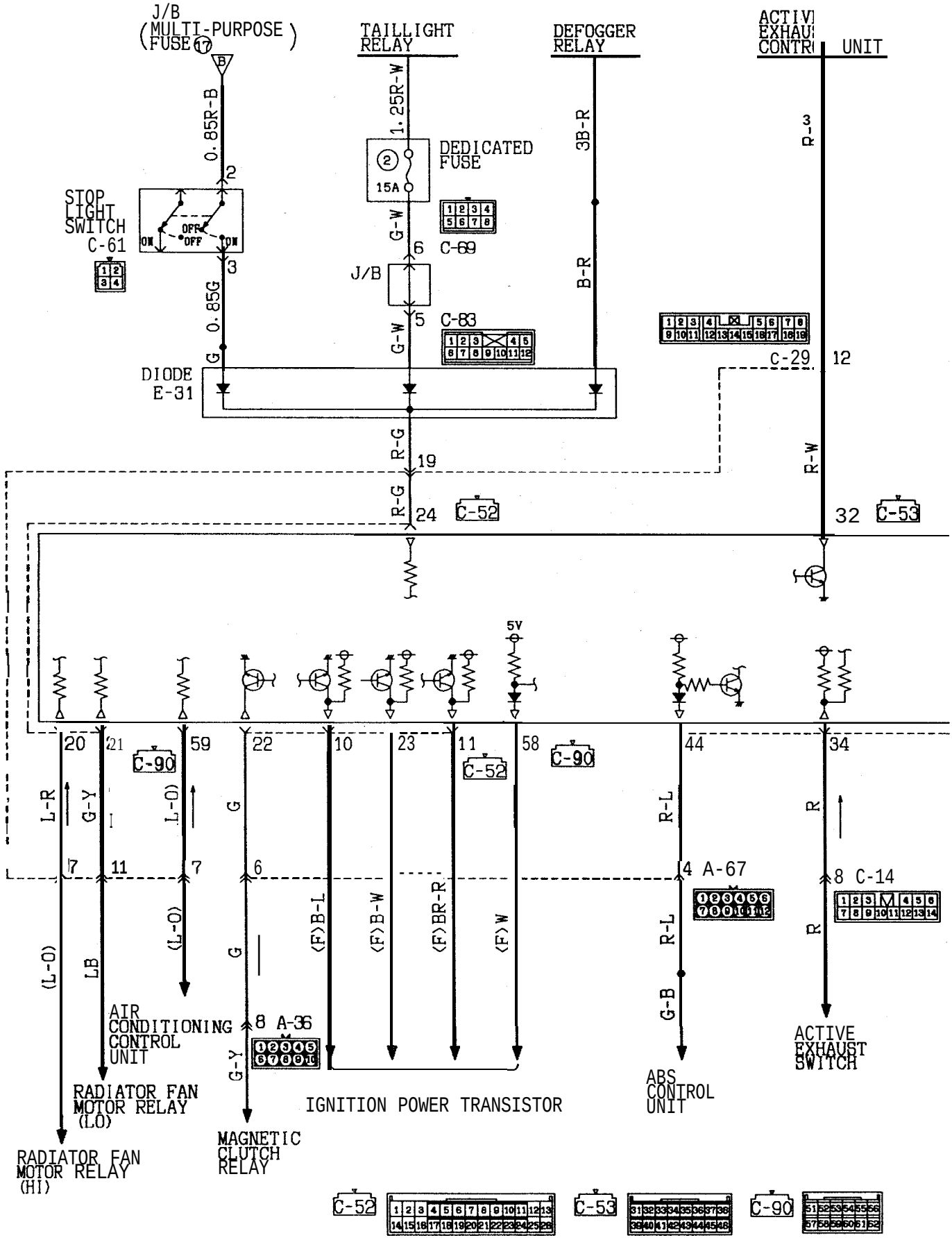
J/B
(MULTI-PURPOSE FUSE 17)
TAILLIGHT RELAY
DEFOGGER RELAY
ACTIVE EXHAUST CONTROL UNIT
0.85R-B
1.25R-W
3B-R
R-3
DEDICATED FUSE
15A
STOP LIGHT SWITCH C-61
ON
OFF
G-W
C-69
J/B
B-R
0.85G
C-83
C-29
DIODE E-31
R-G
R-W
C-52
C-53
5V
C-90
L-R
G-Y
L-O
G
R-L
R
A-67
C-14
(L-O)
LB
(F)B-L
(F)B-W
(F)BR-R
(F)W
G-B
AIR CONDITIONING CONTROL UNIT
A-36
RADIATOR FAN MOTOR RELAY (LO)
IGNITION POWER TRANSISTOR
ABS CONTROL UNIT
ACTIVE EXHAUST SWITCH
MAGNETIC CLUTCH RELAY
RADIATOR FAN MOTOR RELAY (HI)

CIRCUIT DIAGRAM <Turbo> (CONTINUED)

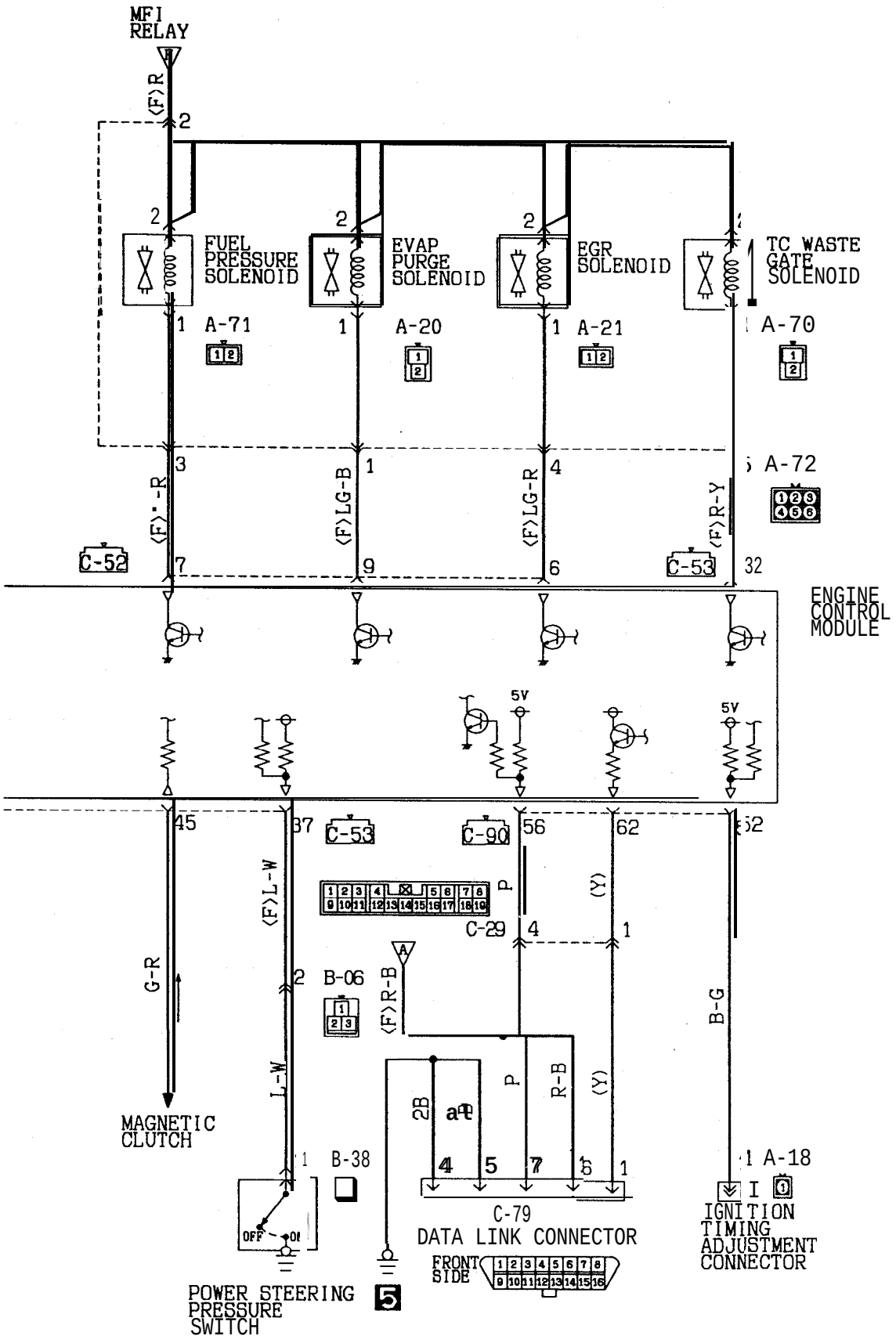

CIRCUIT DIAGRAM <Turbo>

(CALIFORNIA)

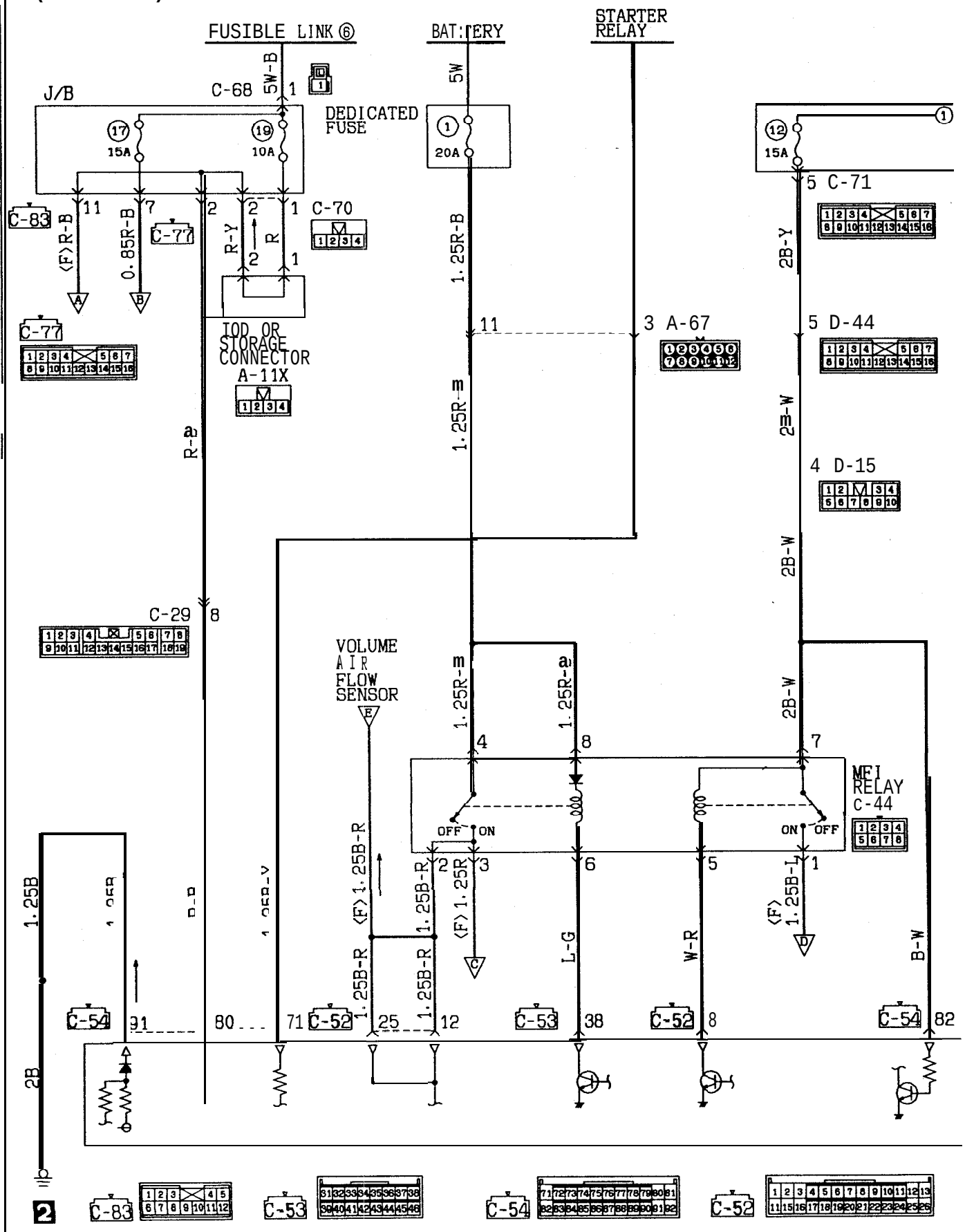

CIRCUIT DIAGRAM <Turbo> (CONTINUED)

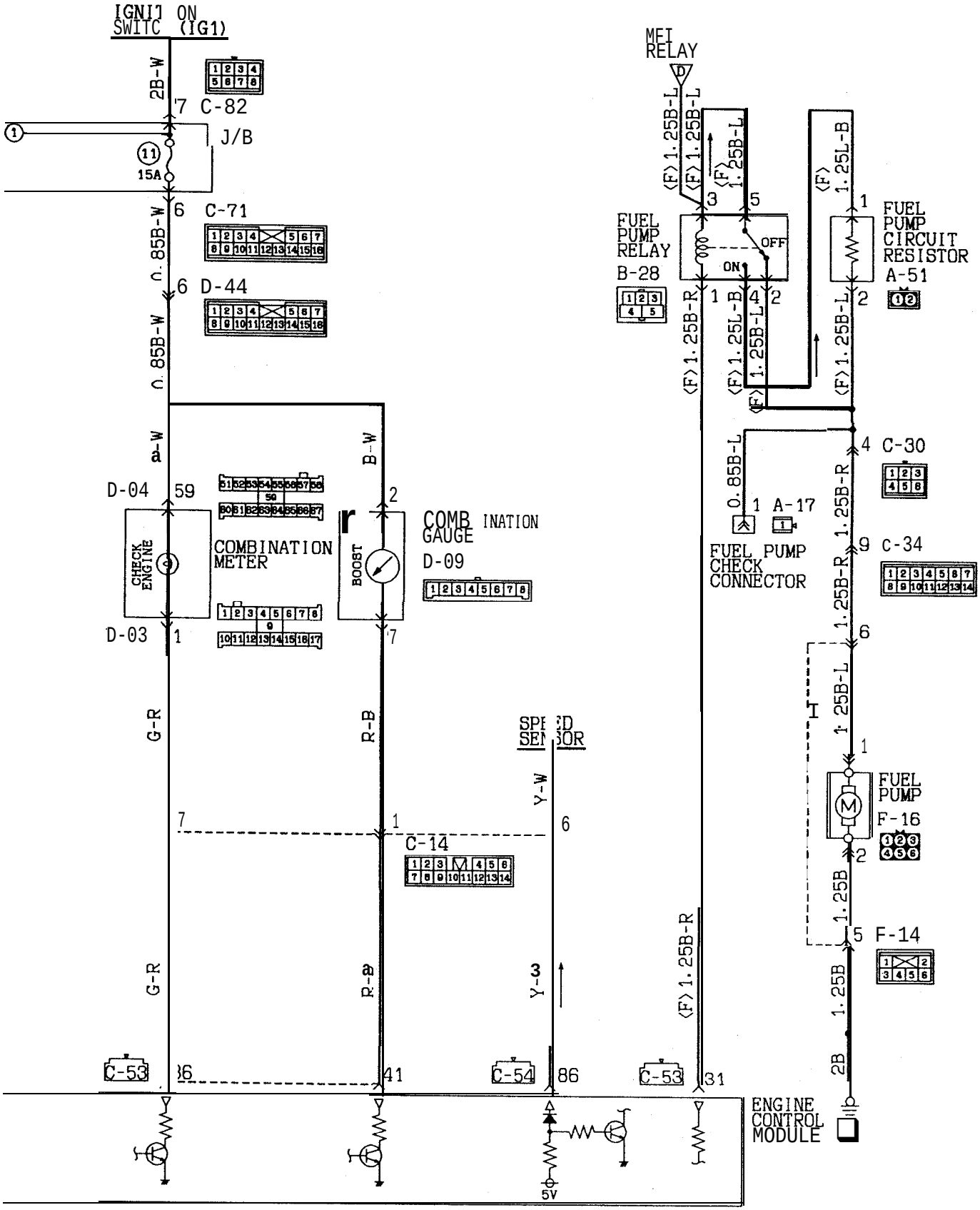

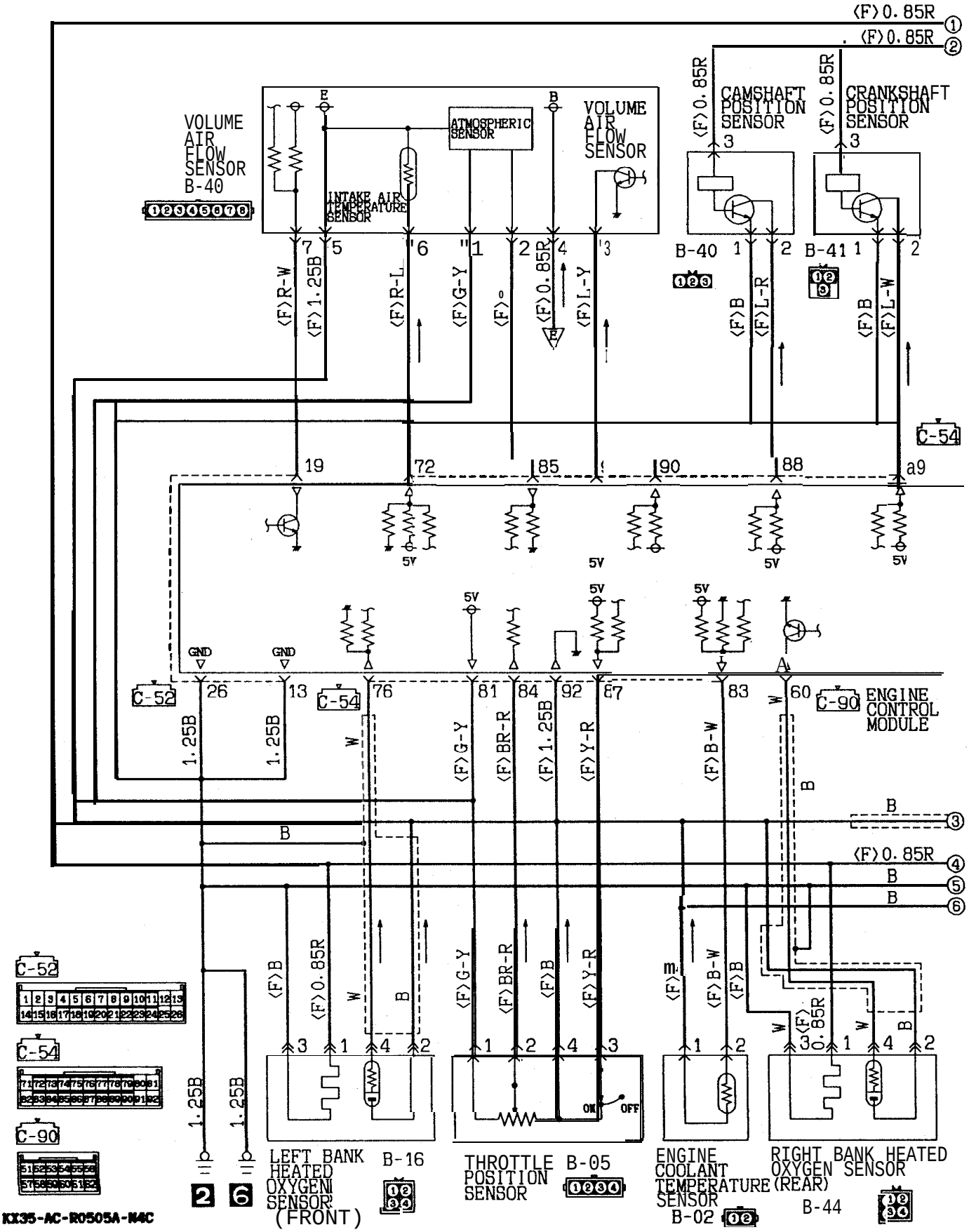
VOLUME AIR FLOW SENSOR B-40
ATMOSPHERIC SENSOR
INTAKE AIR TEMPERATURE SENSOR
VOLUME AIR FLOW SENSOR
CAMSHAFT POSITION SENSOR
CRANKSHAFT POSITION SENSOR
B-40
B-41
C-54
C-52
C-90
ENGINE CONTROL MODULE
5V
GND
LEFT BANK HEATED OXYGEN SENSOR (FRONT)
B-16
THROTTLE POSITION SENSOR
B-05
ENGINE COOLANT TEMPERATURE SENSOR
B-02
RIGHT BANK HEATED OXYGEN SENSOR (REAR)
B-44
ON
OFF
KX35-AC-R0505A-N4C

CIRCUIT DIAGRAM <Turbo> (CONTINUED)

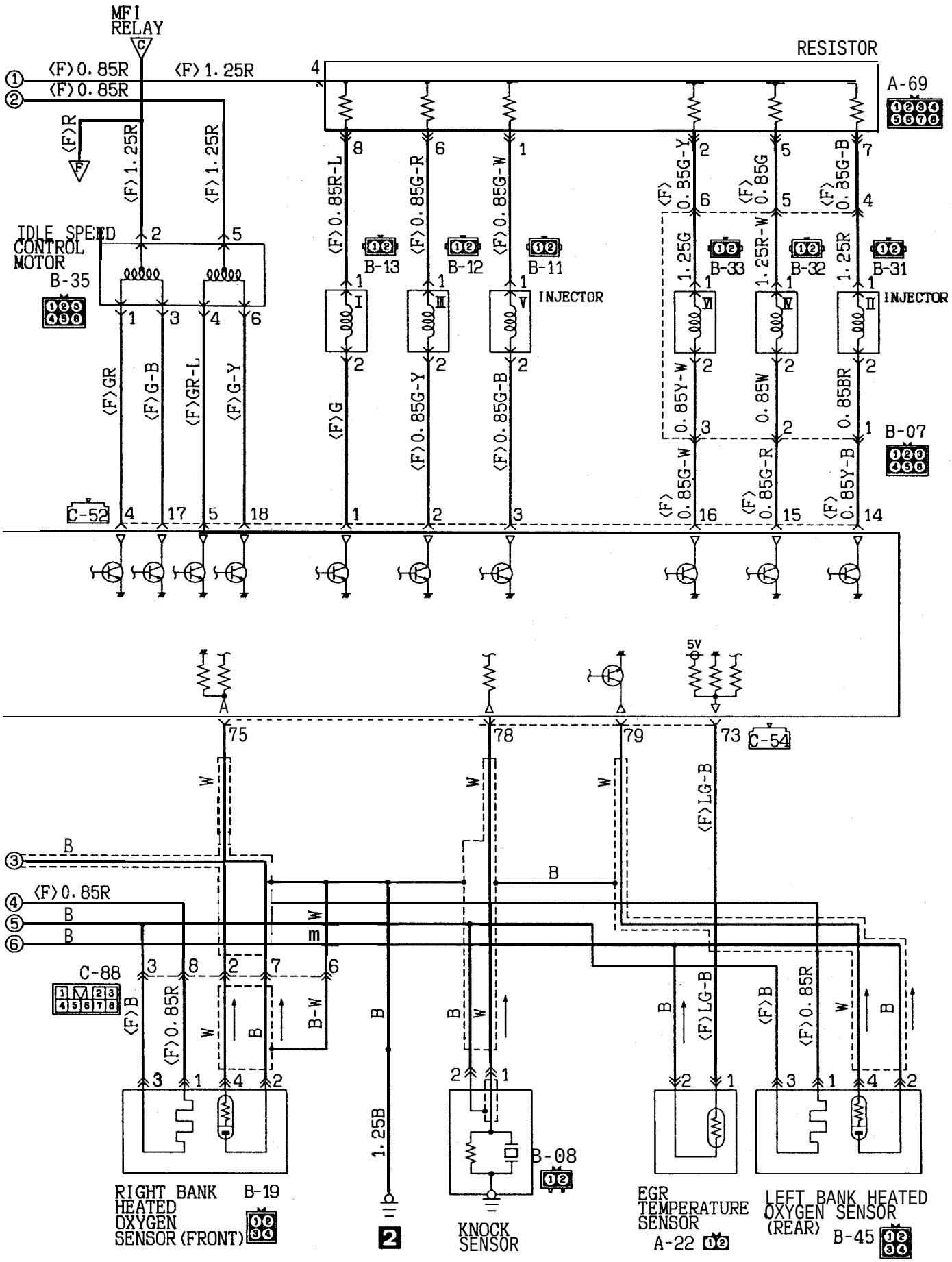

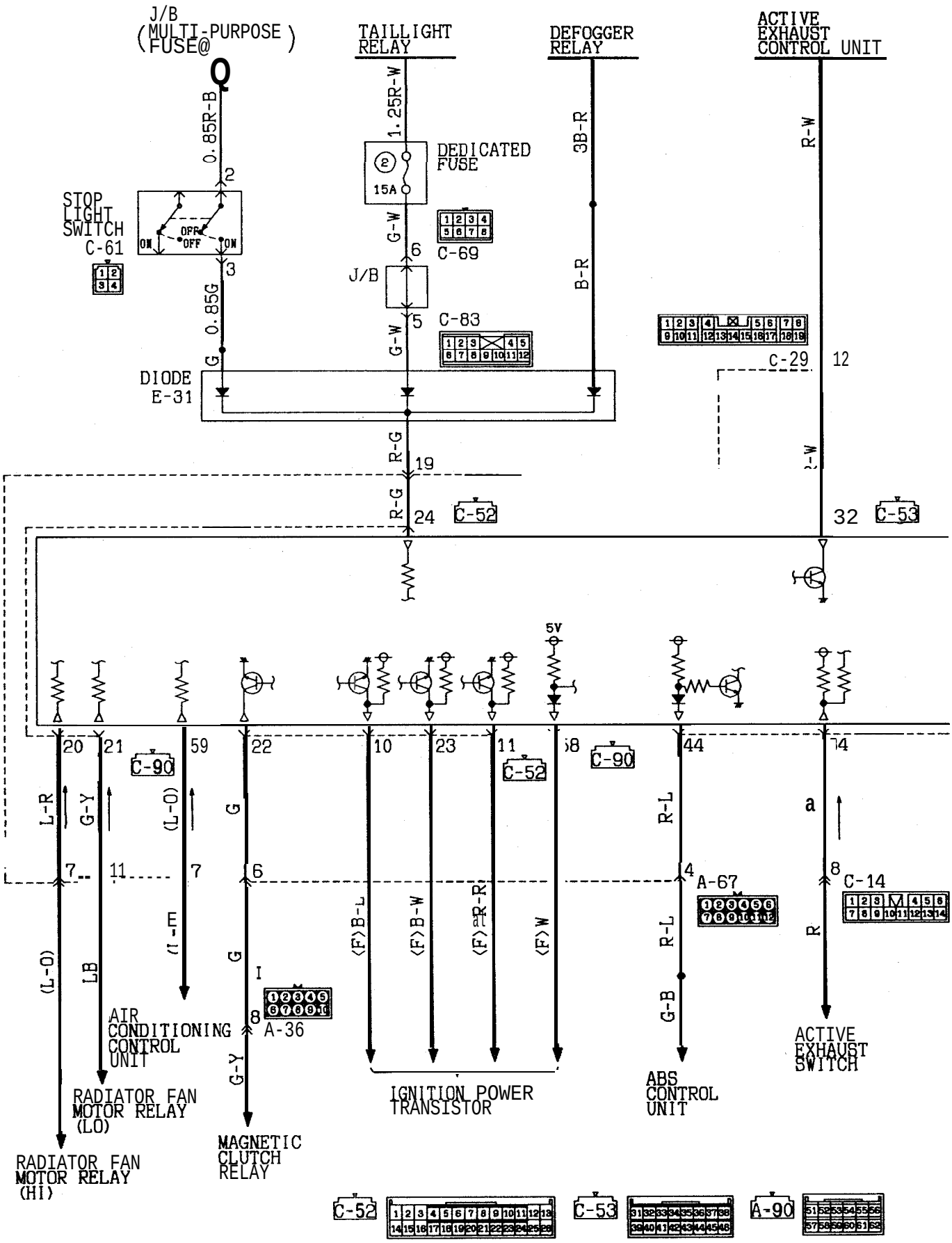
J/B
(MULTI-PURPOSE
FUSE@)
TAILLIGHT RELAY
DEFOGGER RELAY
ACTIVE EXHAUST CONTROL UNIT
0.85R-B
1.25R-W
3B-R
R-W
DEDICATED FUSE
15A
STOP LIGHT SWITCH C-61
ON
OFF
G-W
C-69
J/B
B-R
0.85G
C-83
C-29
DIODE E-31
R-G
C-52
C-53
5V
C-90
L-R
G-Y
(L-O)
G
R-L
a
A-67
C-14
(F)B-L
(F)B-W
(F)R-R
(F)W
G-B
R
AIR CONDITIONING CONTROL UNIT
A-36
RADIATOR FAN MOTOR RELAY (LO)
MAGNETIC CLUTCH RELAY
IGNITION POWER TRANSISTOR
ABS CONTROL UNIT
ACTIVE EXHAUST SWITCH
RADIATOR FAN MOTOR RELAY (HI)
A-90

CIRCUIT DIAGRAM <Turbo> (CONTINUED)

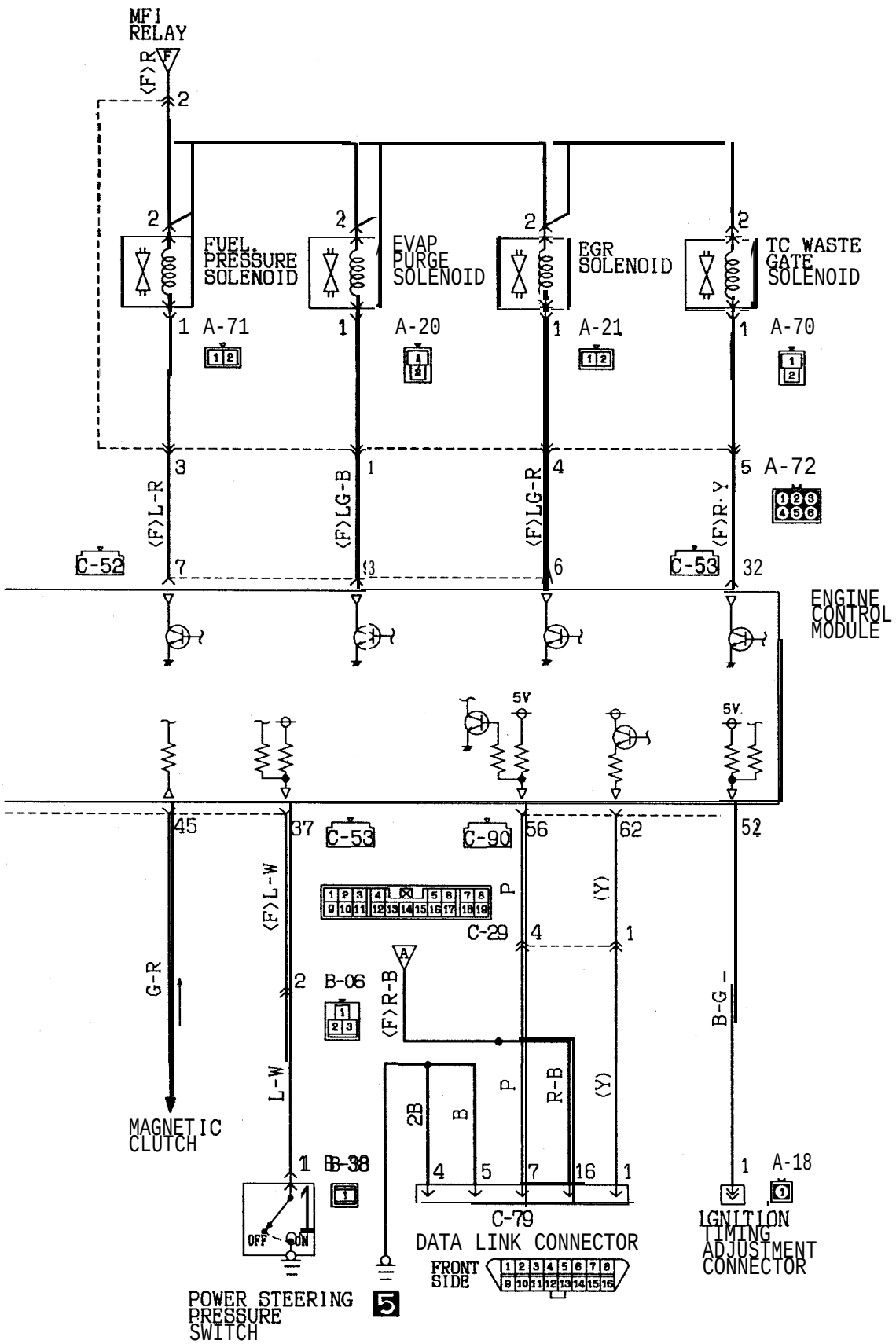

SERVICE ADJUSTMENT PROCEDURES

BASIC IDLE SPEED ADJUSTMENT

NOTE

(1) The basic idle speed has been factory-adjusted with the engine speed adjusting screw and does not normally require adjustment.

(2) If adjustment has been disturbed, or if the idle speed is too high or it drops owing to application of air conditioning load to the engine, perform the following step to make adjustment.

(3) If the adjustment is required, first check that the ignition plug, injector, idle air control motor, and compression pressure are normal.

(1) Before starting the inspection and adjustment procedures, set the vehicle in the following conditions:

- Engine coolant temperature: 80 to 95°C (176 to 205°F)
- Lights, electric cooling fan, accessories: OFF
- Transaxle: Neutral (P range on vehicles with automatic transaxle)
- Steering wheel: Straightforward position

(2) Connect the scan tool to the data link connector (white).

NOTE

The connection of the scan tool grounds the diagnostic test mode control terminal.

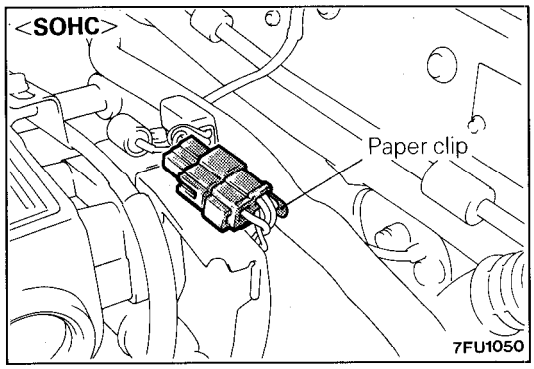

(3) If not using the scan tool, proceed as follows:

① Install a paper clip to the 3-pin connector from the harness side as shown in the illustration. Do not disconnect the connector. <SOHC>

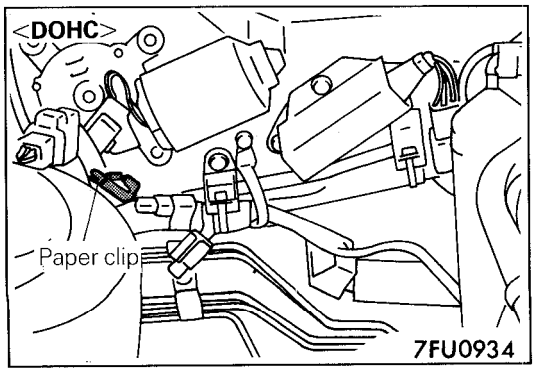

① Insert a paper clip into the I-pin blue connector as shown in the illustration. <DOHC>

② Connect a primary-voltage-detecting tachometer to the paper clip.

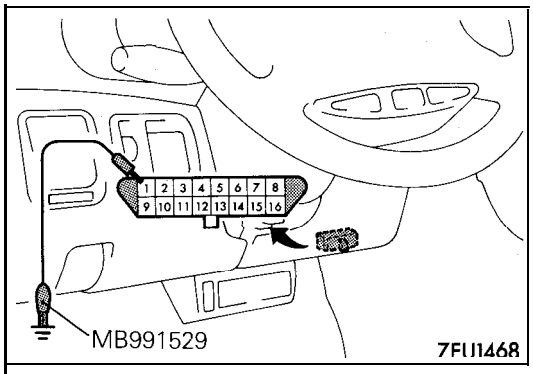

③ Use the special tool (Diagnostic Trouble Code Check Harness) to ground the diagnostic test mode control terminal (terminal ①) of the data link connector (16-pin).

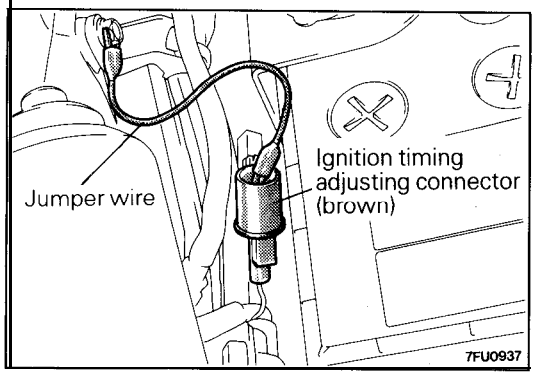

(4) Remove the waterproof female connector from the ignition timing adjusting connector (brown).
(5) Using a jumper wire, ground the ignition timing adjusting terminal.

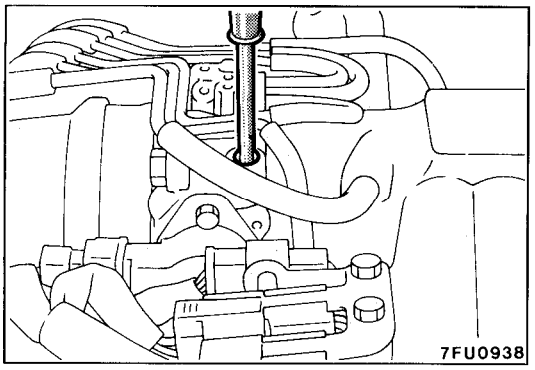

(6) Start the engine and run at idle.
(7) Check the basic idle speed.

Basic idle speed: 700 ± 50 rpm

NOTE
1. The engine speed may be low by 20 to 100 rpm while the vehicle is new [distance driven approx. 500 km (300 miles) or less], but no adjustment is necessary.
2. If the engine stalls or speed is low despite a sufficient distance driven [approx. 500 km (300 miles) or morel, it is probably due to deposits on the throttle valve. In this case, clean the throttle valve. (Refer to P.14A-65.)
3. The tachometer should read 1/3 of the actual engine speed. This means that the actual engine speed is the tachometer reading multiplied by 3.

(8) If the basic idle speed is out of specification, adjust by turning the engine speed adjusting screw.

NOTE
If the idle speed is higher than the standard value even with engine speed adjusting screw fully tightened, check to see if there is evidence of the closed throttle position switch being moved. If the closed throttle position switch seems to have been moved, adjust it. If it does not seem to have been moved, there may be a leak caused by deteriorated fast idle air valve (FIAV). In such a case, replace the throttle body.

(9) Turn the ignition switch OFF.
(10) When the scan tool has not been used, remove the jumper wire from the diagnostic test mode control terminal.
(1 l) Remove the jumper wire from the ignition timing adjusting terminal and replace the connector back again.
(12) Start the engine again and run at idle for 10 minutes to make sure that the engine runs at proper idle speed.

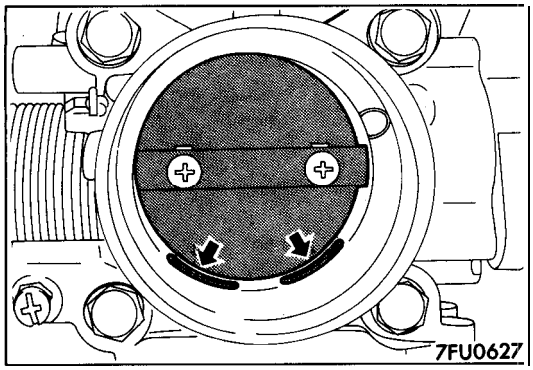

THROTTLE BODY (THROTTLE VALVE AREA) CLEANING

(1) Start the engine, warm it up until engine coolant temperature rises to 80°C (176°F), and stop the engine.
(2) Disconnect the air intake hose at the throttle body side.
(3) Put a plug in the inlet of bypass passage in the throttle body.

Caution
Never allow cleaning agent to flow into the bypass passage.

(4) Spray cleaning agent from the intake port of the throttle body to the valve and leave as it is for 5 minutes or so.
(5) Start the engine and race it several times. Then, run it idle for approx. one minute.

NOTE
If the engine idle speed becomes unstable (and fails in the worst case) after plugging the bypass passage, run the engine with the throttle valve slightly opened.

(6) If the deposit cannot be removed from the throttle valve, repeat steps (4) and (5).
(7) Disconnect the plug from the inlet of the bypass passage.
(8) Install the air intake hose.
(9) Use a scan tool. to erase the diagnostic trouble code or disconnect the battery ground cable for more than 10 seconds and then connect it again.
(lO) Adjust the basic idle speed (speed adjusting screw). (Refer to P. 14A-63.)

NOTE
If the engine hunts while it is idling after adjustment of the basic idle speed, disconnect the negative cable from the battery terminal for more than 10 seconds and then idle the engine again.

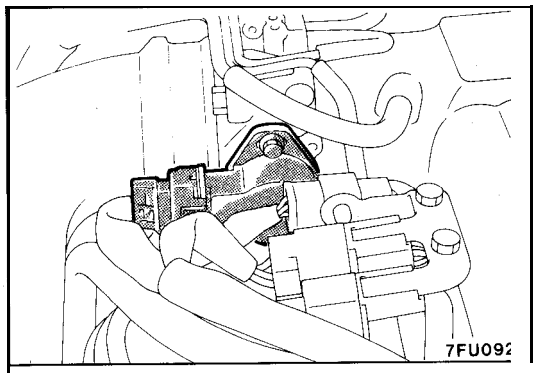

ADJUSTMENT OF CLOSED THROTTLE POSITION SWITCH AND THROTTLE POSITION SENSOR (TPS)

(1) Disconnect the throttle position sensor connector.

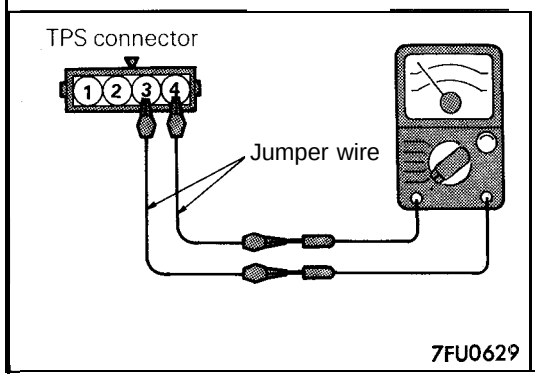

(2) Using jumper wires, connect an ohmmeter across terminal ③ (closed throttle position switch) and terminal ④ (sensor ground) of the throttle position sensor.

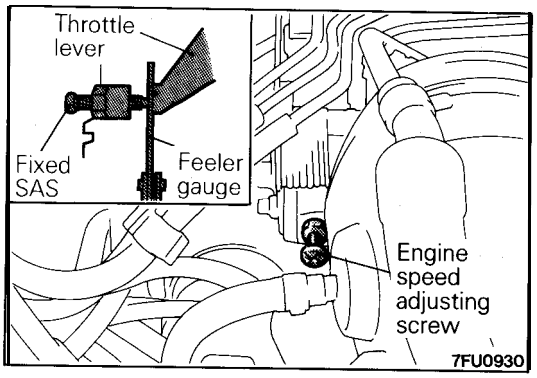

(3) Insert a 0.65-mm (.025 in.)-thick feeler gauge between the fixed SAS and throttle lever.

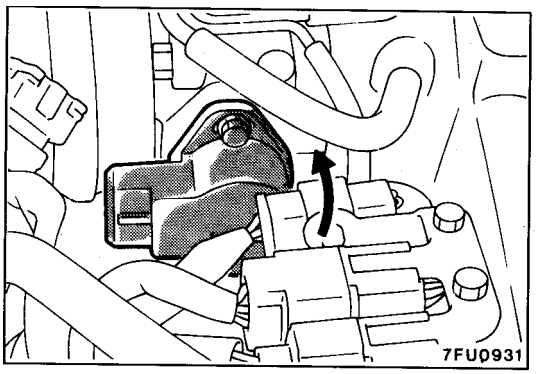

(4) Loosen the throttle position sensor mounting bolts and turn the throttle position sensor body fully counterclockwise.
(5) In this condition, check that there is continuity across terminals ③ and ④.

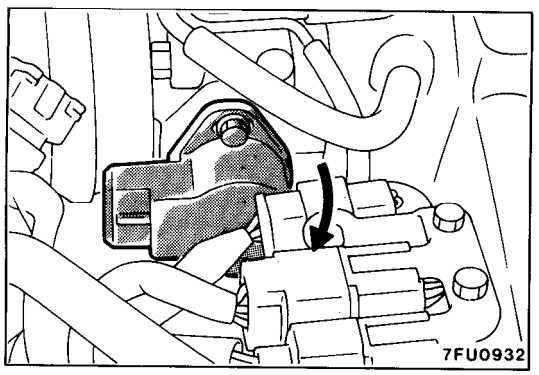

(6) Slowly turn the throttle position sensor clockwise until you find a point at which there is no continuity across terminals ③ and ④. Then, tighten the throttle position sensor mounting bolt securely.
(7) Connect the throttle position sensor connector.

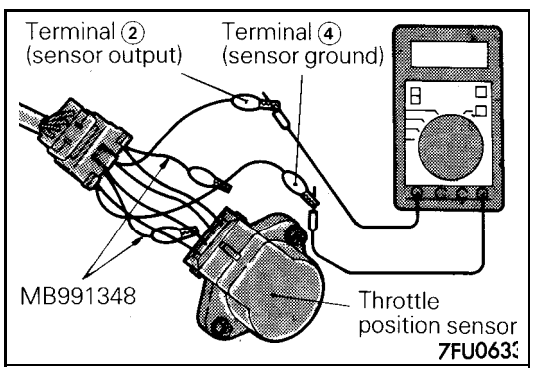

(8) Connect the scan tool to the data link connector (white).
(9) If not using the scan tool, proceed as follows:
  ① Disconnect the throttle position sensor connectors and connect the special. tool, Test Harness Set, between the disconnected connectors.
  ② Connect a digital voltmeter between the throttle position sensor terminal ② (sensor output) and teminal ④ (sensor ground).
(10) Turn the ignition switch ON (but do not start the engine).
(11) Check the throttle position sensor output voltage.

Standard value: 400 – 1,000 mV

(12) If the voltage is out of specification, check the throttle position sensor and associated harnesses.
(13) Remove the feeler gauge.
(14) Turn the ignition switch OFF.

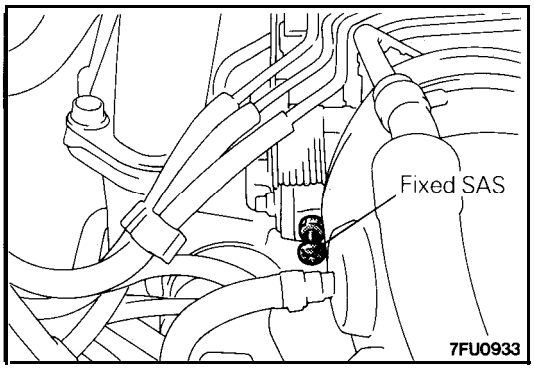

ADJUSTMENT OF FIXED SAS

NOTE
(1) The fixed SAS has been factory-adjusted. Never attempt to move it.
(2) Should it be out of proper adjustment, adjust by following the procedure given below.

(1) Sufficiently slacken the accelerator cable.
(2) Loosen the lock nut on the fixed SAS.
(3) Sufficiently loosen the fixed SAS by turning it counterclockwise to fully close the throttle valve.
(4) Tighten the fixed SAS slowly to find a point at which it contacts the throttle lever (where the throttle valve starts opening). From that point, tighten the fixed SAS further 1 ¼ turns.
(5) Holding the fixed SAS to prevent it from turning, tighten the lock nut securely.
(6) Adjust the accelerator cable tension. (Refer to P.14F-3.)
(7) Adjust the basic idle speed. (Refer to P.14A-63.)
(8) Adjust the closed throttle position switch and throttle position sensor (TPS). (Refer to P.14A-65.)

ON-VEHICLE INSPECTION OF MFI COMPONENTS <SOHC, Federal-Non Turbo, Canada-Non Turbo>

COMPONENT LOCATION

<SOHC>

Name	Symbol	Name	Symbol
Air conditioning relay	O	Ignition coil (ignition power transistor)	M
Air conditioning switch	G	Ignition timing adjusting terminal	Q
Camshaft position sensor and crankshaft position sensor	D	Injector	K
Check engine/malfunction indicator lamp	P	Multiport fuel injection (MFI) relay	N
EGR solenoid <California>	V	Diagnostic output terminal and diagnostic test mode control terminal	R
EGR temperature sensor <California>	T	Park/Neutral position switch <A/T>	I
Engine control module	S	Power steering pressure switch	H
Engine coolant temperature sensor	B	Throttle position sensor (with built-in closed throttle position switch)	C
Evaporative emission purge solenoid	U	Variable air intake control servo (DC motor) (with built-in air intake control valve position sensor)	J
Heated oxygen sensor	E	Vehicle speed sensor (reed switch)	F
Idle air control motor (stepper motor)	L	Volume air flow sensor (with built-in intake air temperature sensor and barometric pressure sensor)	A

NOTE
The "Name" column is in alphabetical order.

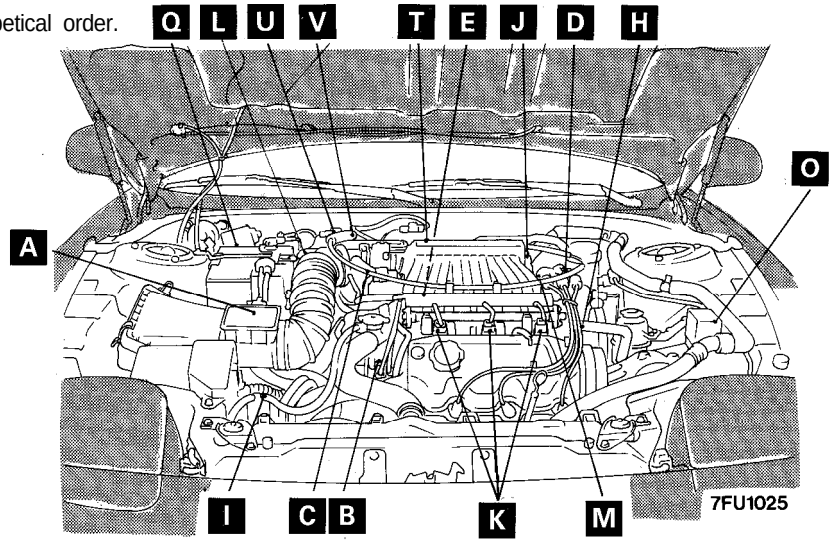

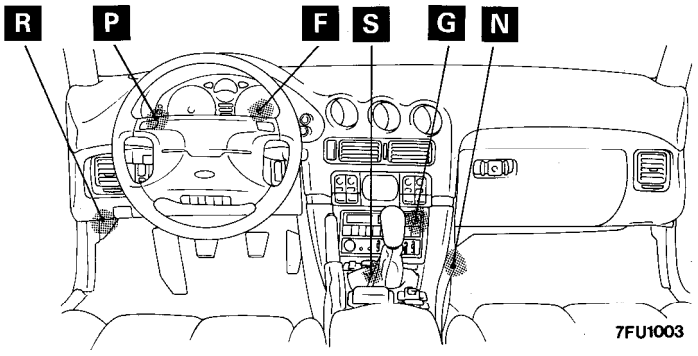

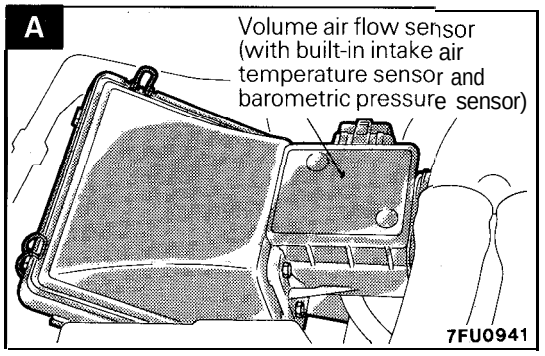
A
Volume air flow sensor (with built-in intake air temperature sensor and barometric pressure sensor)
7FU0941

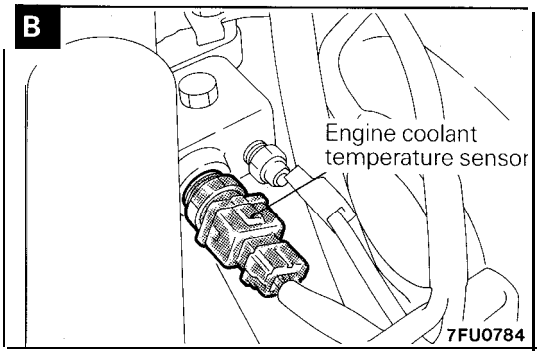
B
Engine coolant temperature sensor
7FU0784

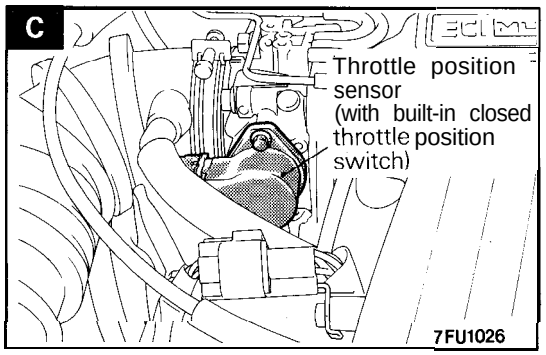
C
Throttle position sensor (with built-in closed throttle position switch)
7FU1026

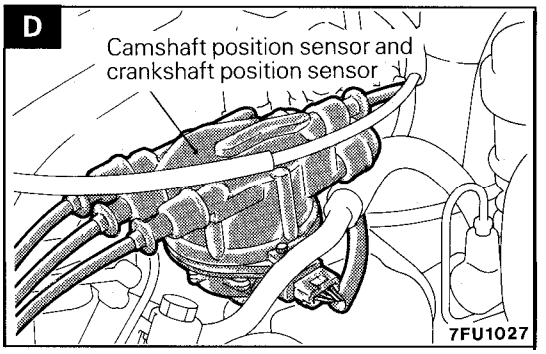
D
Camshaft position sensor and crankshaft position sensor
7FU1027

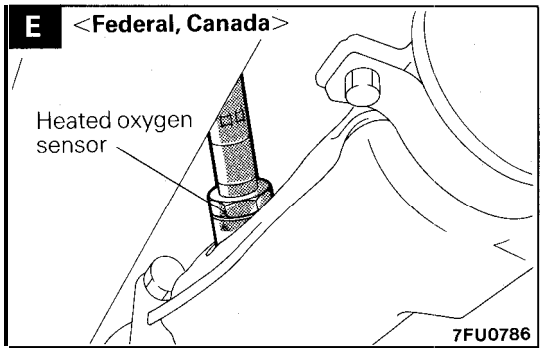
E <Federal, Canada>
Heated oxygen sensor
7FU0786

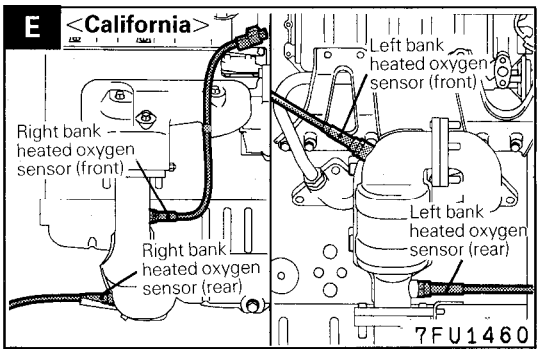
E <California>
Left bank heated oxygen sensor (front)
Right bank heated oxygen sensor (front)
Left bank heated oxygen sensor (rear)
Right bank heated oxygen sensor (rear)
7FU1460

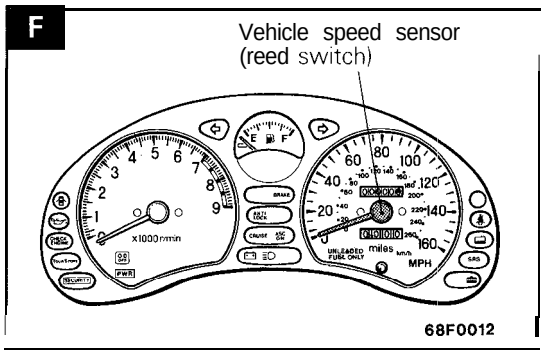
F
Vehicle speed sensor (reed switch)
68F0012

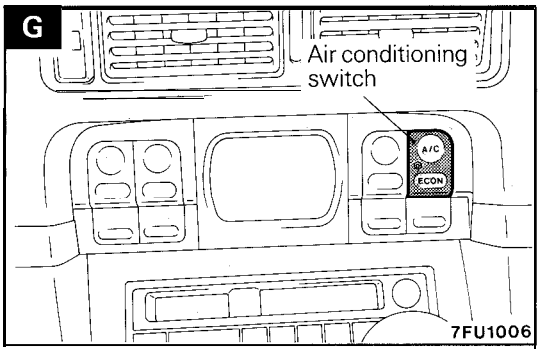
G
Air conditioning switch
A/C
ECON
7FU1006

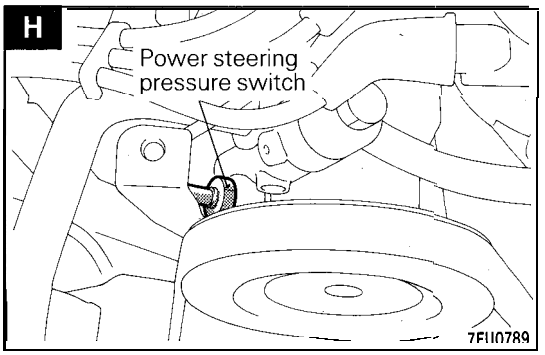
H
Power steering pressure switch
7FU0789

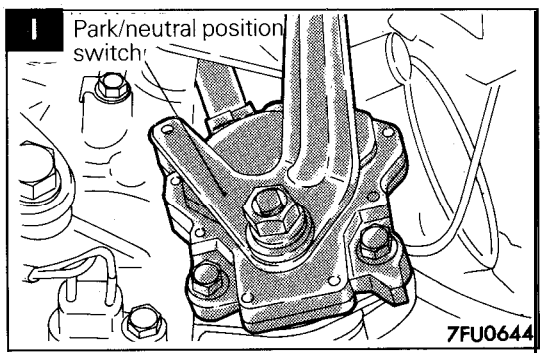
I
Park/neutral position switch
7FU0644

J

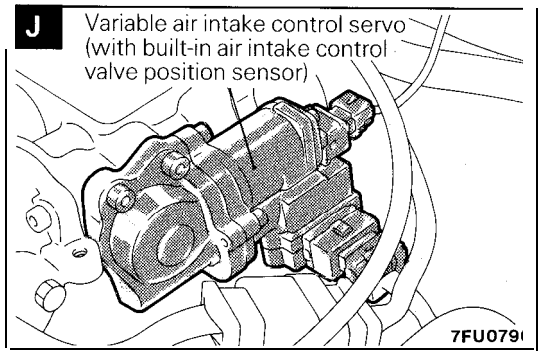
Variable air intake control servo
(with built-in air intake control
valve position sensor)
7FU0791

K

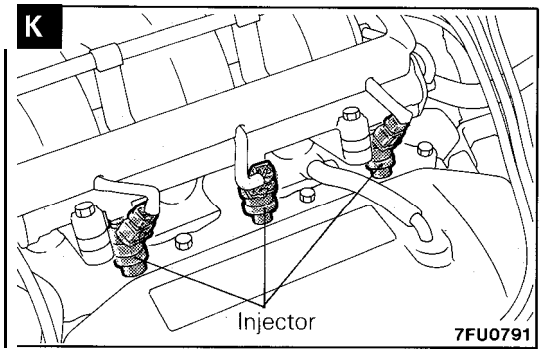
Injector
7FU0791

L

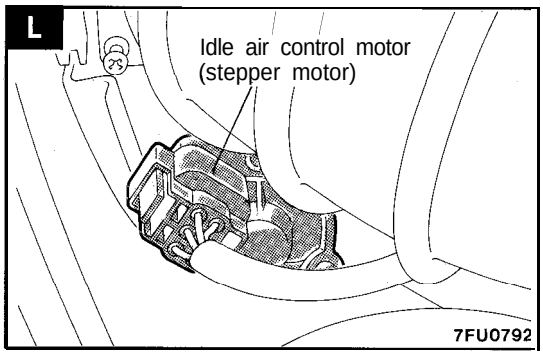
Idle air control motor
(stepper motor)
7FU0792

M

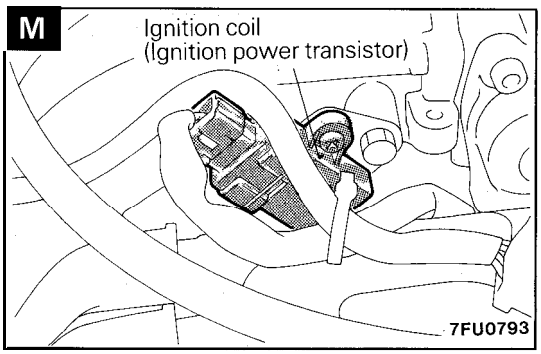
Ignition coil
(Ignition power transistor)
7FU0793

N

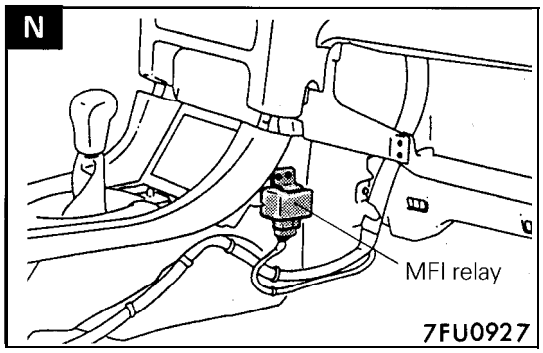
MFI relay
7FU0927

O

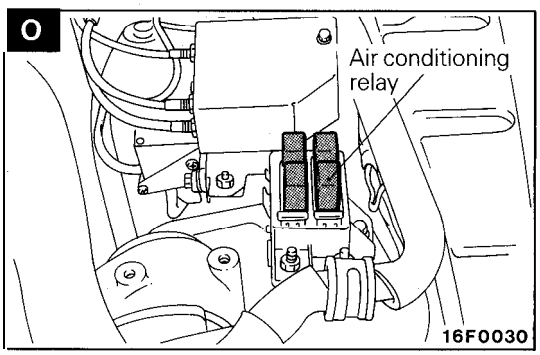
Air conditioning
relay
16F0030

P

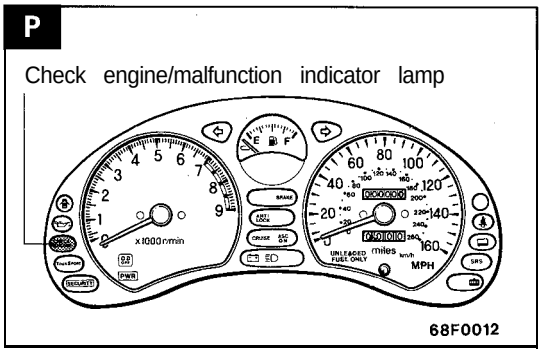
Check engine/malfunction indicator lamp
68F0012

Q

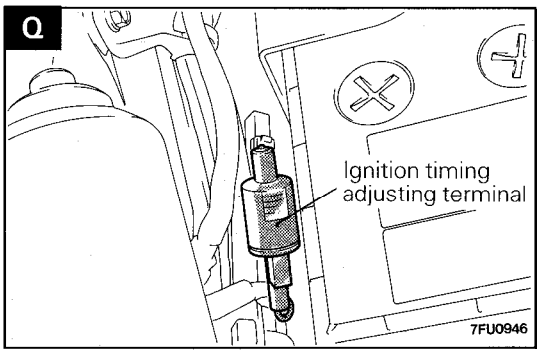
Ignition timing
adjusting terminal
7FU0946

R

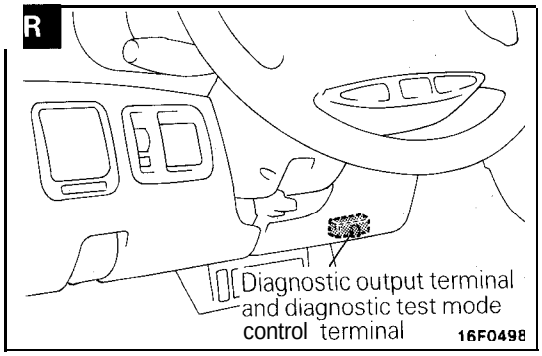
Diagnostic output terminal
and diagnostic test mode
control terminal
16F0498

S

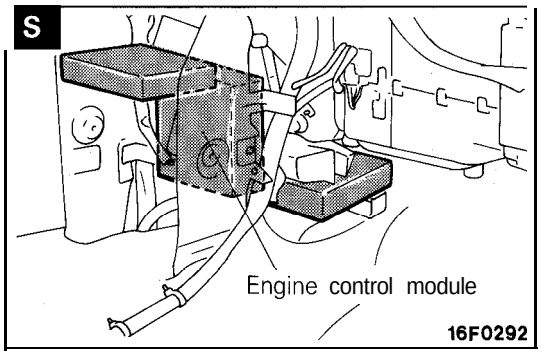
Engine control module
16F0292

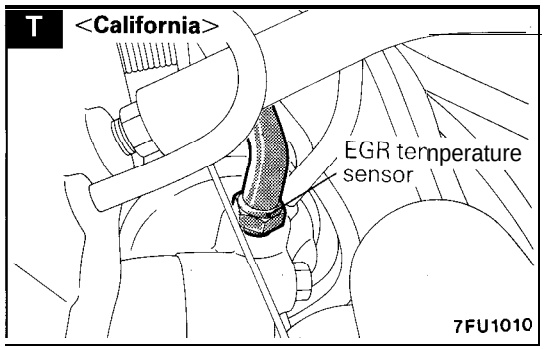
T
<California>
EGR temperature sensor
7FU1010

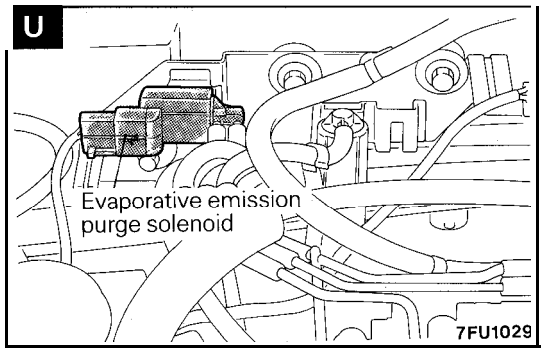
U
Evaporative emission purge solenoid
7FU1029

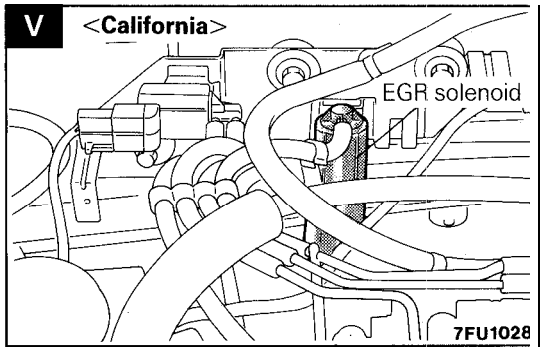
V
<California>
EGR solenoid
7FU1028

<DOHC>

Name	Symbol	Name	Symbol
Air-conditioning relay	O	Ignition coil (ignition power transistor)	M
Air-conditioning switch	G	Ignition timing adjusting terminal	Q
Camshaft position sensor	V	Injector	K
Check engine/malfunction indicator lamp	P	Knock sensor	T
Crankshaft position sensor	D	Multiport fuel injection (MFI) relay	N
Diagnostic output terminal and diagnostic test mode control terminal	R	Park/Neutral position switch <A/T>	I
Engine control module	S	Power steering pressure switch	H
Engine coolant temperature sensor	B	Throttle position sensor (with built-in closed throttle position switch)	C
Evaporative emission purge solenoid	U	Variable induction control motor (DC motor) (with built-in induction control valve position sensor)	J
Heated oxygen sensor	E	Vehicle speed sensor	F
Idle air control motor (stepper motor)	L	Volume air flow sensor (with built-in intake air temperature sensor and barometric pressure sensor)	A

NOTE
The "Name" column is in alphabetical order

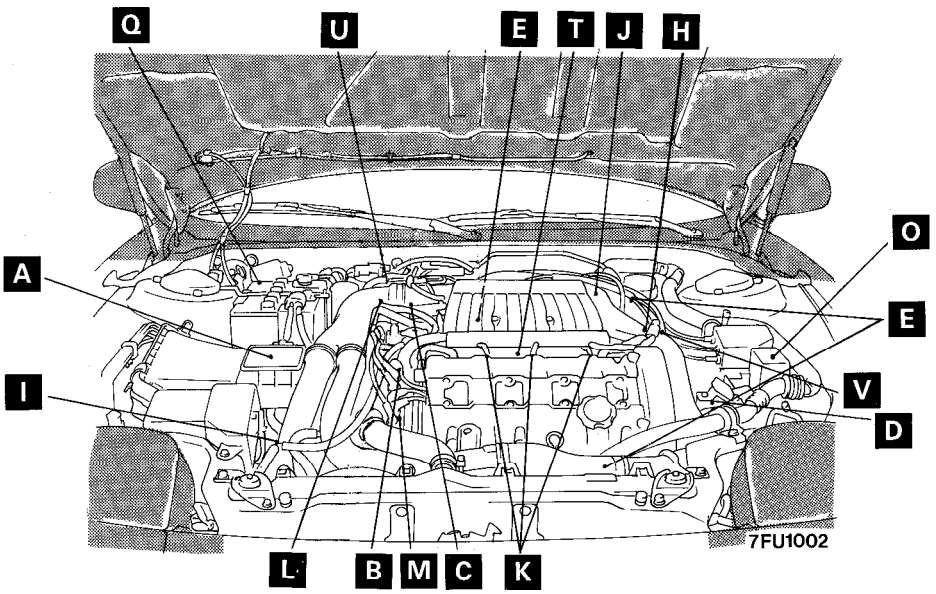

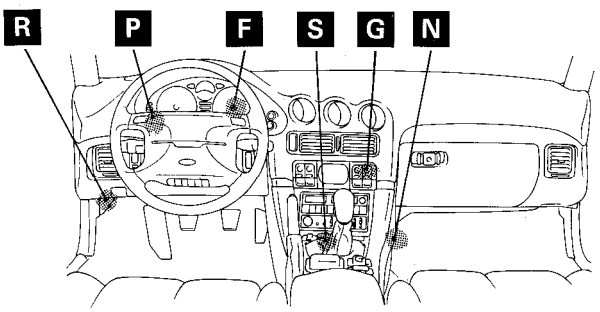

7FU1003

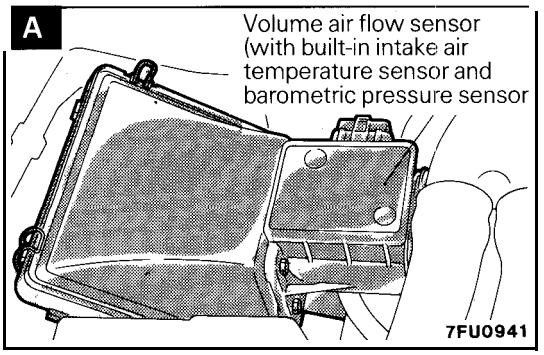
A
Volume air flow sensor (with built-in intake air temperature sensor and barometric pressure sensor
7FU0941

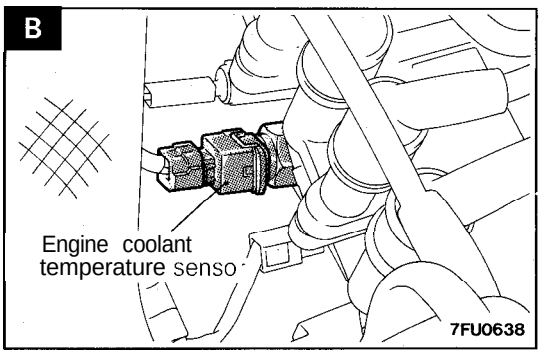
B
Engine coolant temperature senso
7FU0638

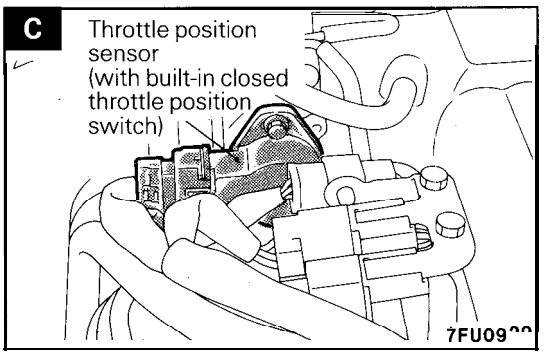
C
Throttle position sensor (with built-in closed throttle position switch)

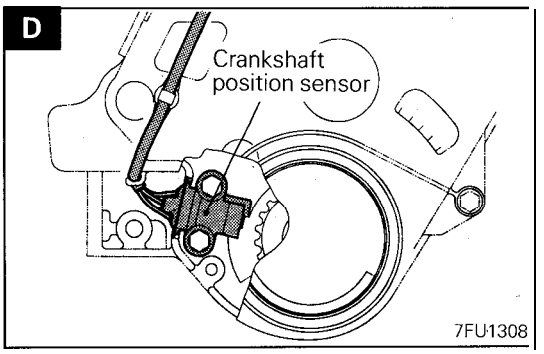
D
Crankshaft position sensor
7FU1308

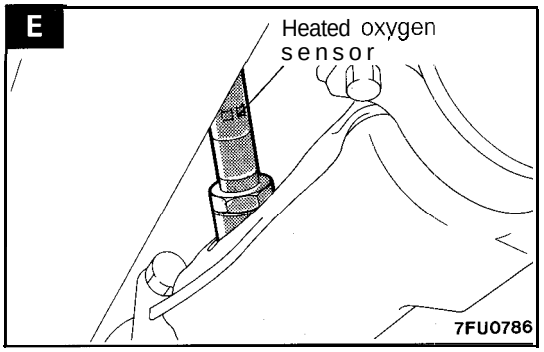
E
Heated oxygen sensor
7FU0786

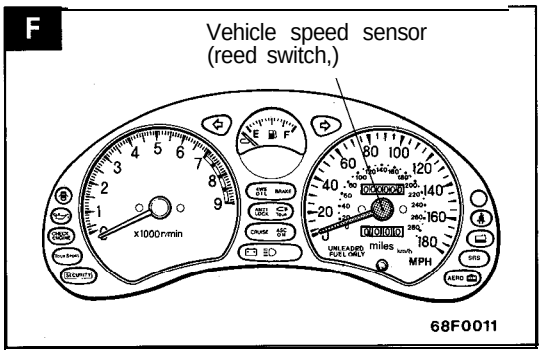
F
Vehicle speed sensor (reed switch,)
x1000r/min
MPH
68F0011

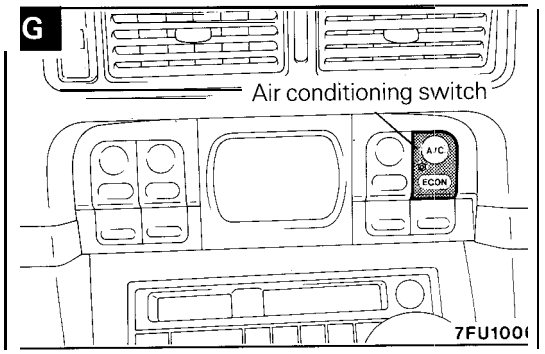
G
Air conditioning switch
A/C
ECON

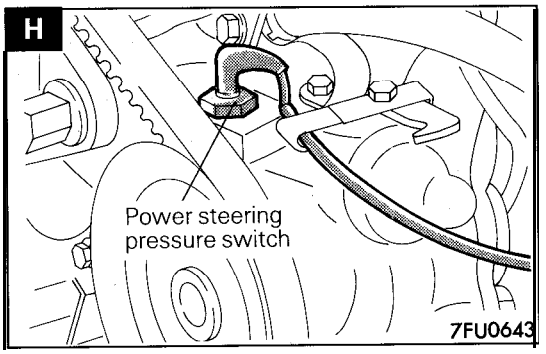
H
Power steering pressure switch
7FU0643

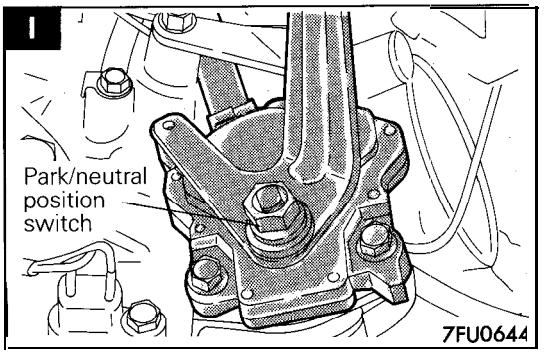
I
Park/neutral position switch
7FU0644

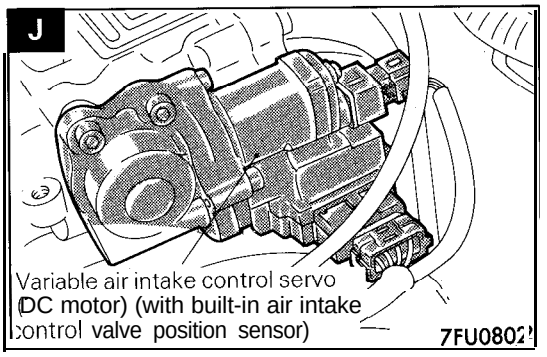
J
Variable air intake control servo (DC motor) (with built-in air intake control valve position sensor)

K

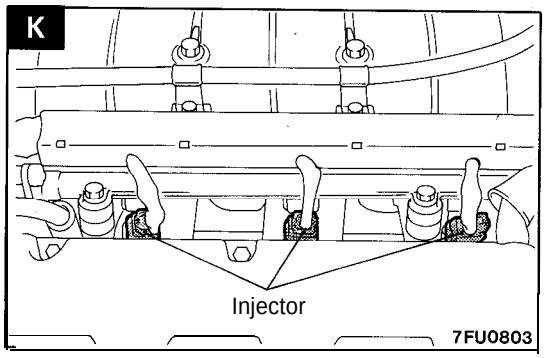
Injector
7FU0803

L

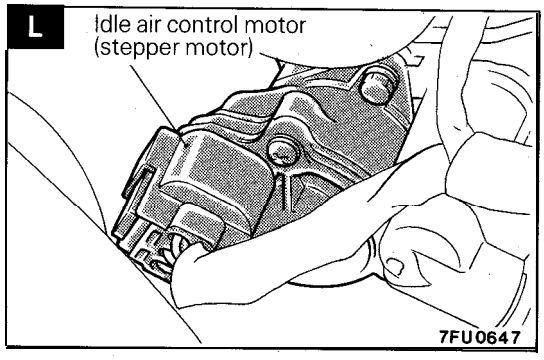
Idle air control motor
(stepper motor)
7FU0647

M

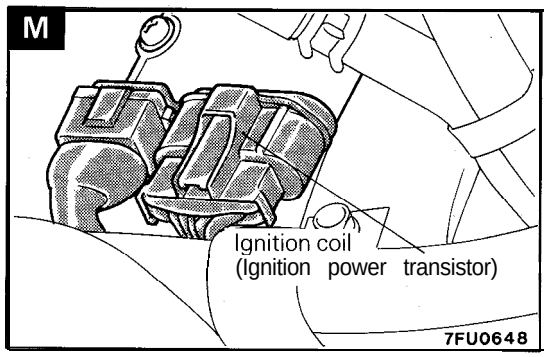
Ignition coil
(Ignition power transistor)
7FU0648

N

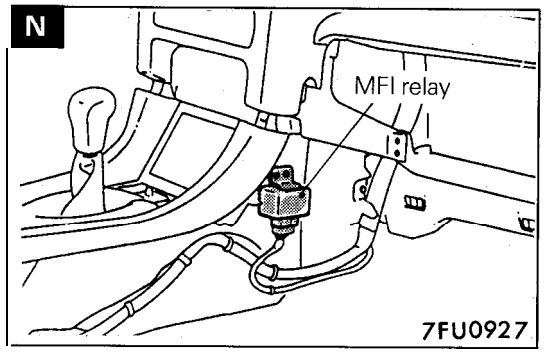
MFI relay
7FU0927

O

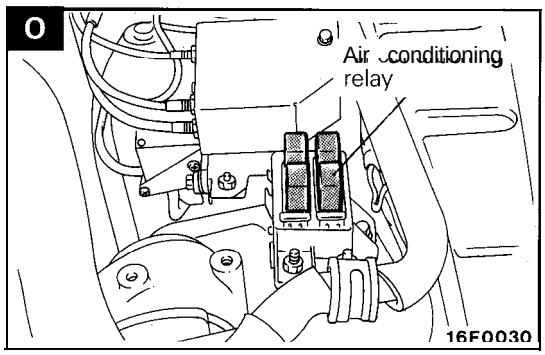
Air conditioning
relay
16F0030

P

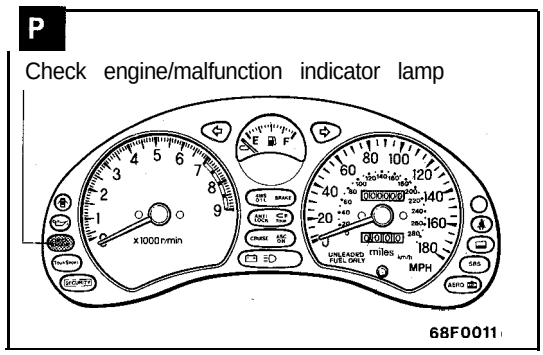
Check engine/malfunction indicator lamp
x1000 r/min
MPH
68F0011

Q

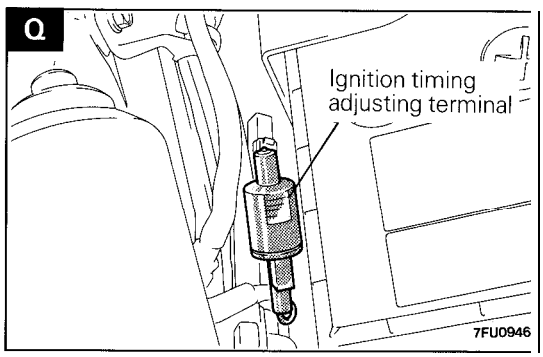
Ignition timing
adjusting terminal
7FU0946

R

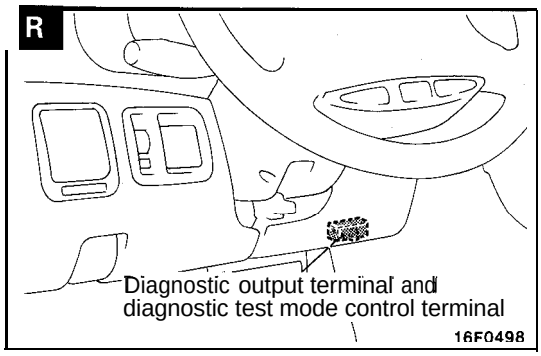
Diagnostic output terminal and
diagnostic test mode control terminal
16F0498

S

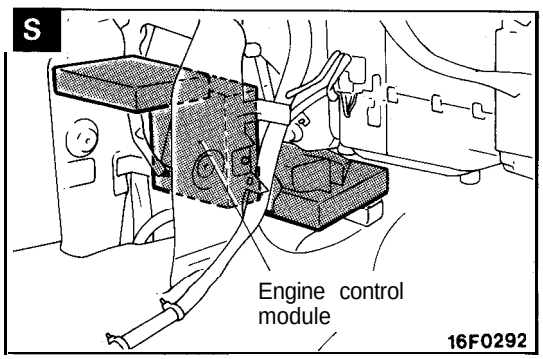
Engine control
module
16F0292

T

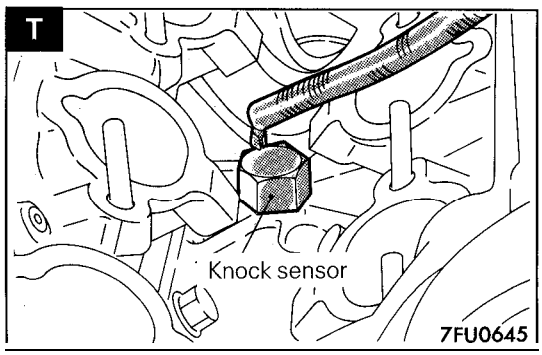
Knock sensor
7FU0645

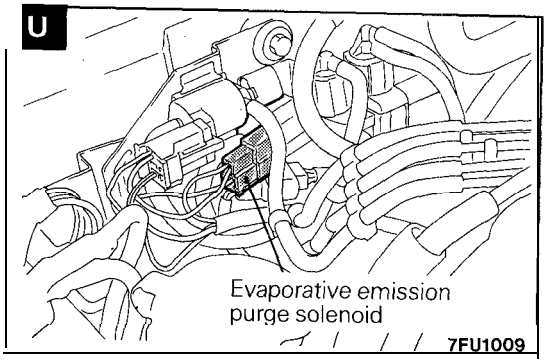
U
Evaporative emission
purge solenoid
7FU1009

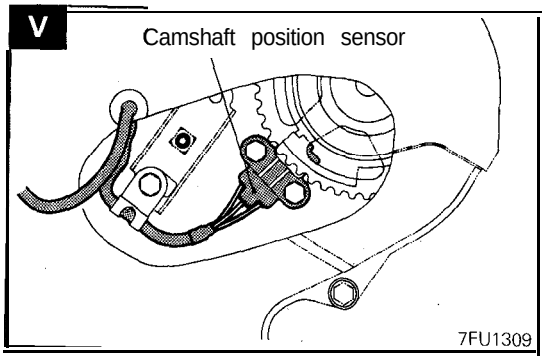
V
Camshaft position sensor
7FU1309

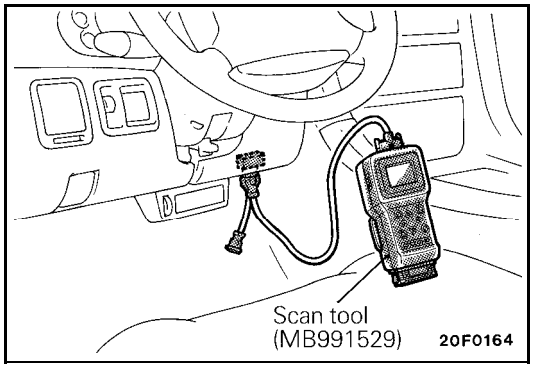

COMPONENTS INSPECTION PROCEDURE

USING SCAN TOOL

(1) Check by the data reading and actuator test function. If any abnormality is found, check the body harness, components, etc. and repair as necessary.
(2) After repair, check again-with the scan tool to make sure that the input and output signals are now normal.
(3) Erase the diagnostic trouble code in memory.
(4) Disconnect the scan tool.
(5) Start the engine and perform running test, etc. to make sure that the troubles have been corrected.

POWER SUPPLY (MFI relay) AND IGNITION SWITCH-IG

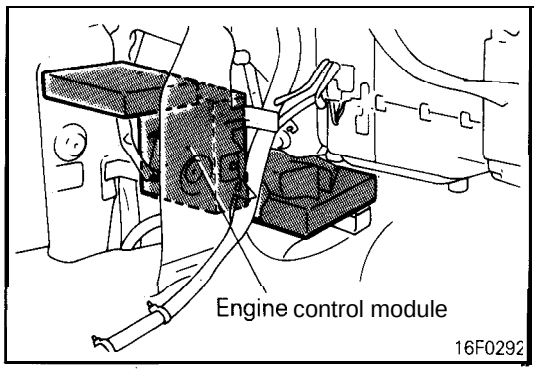

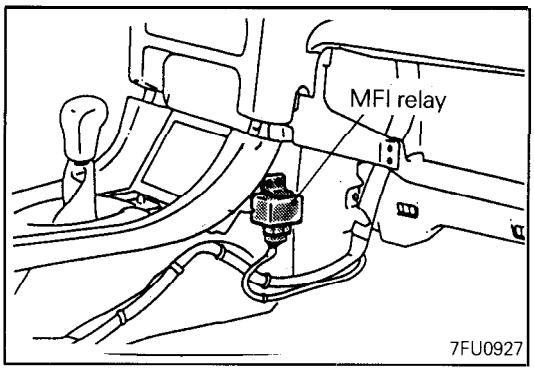

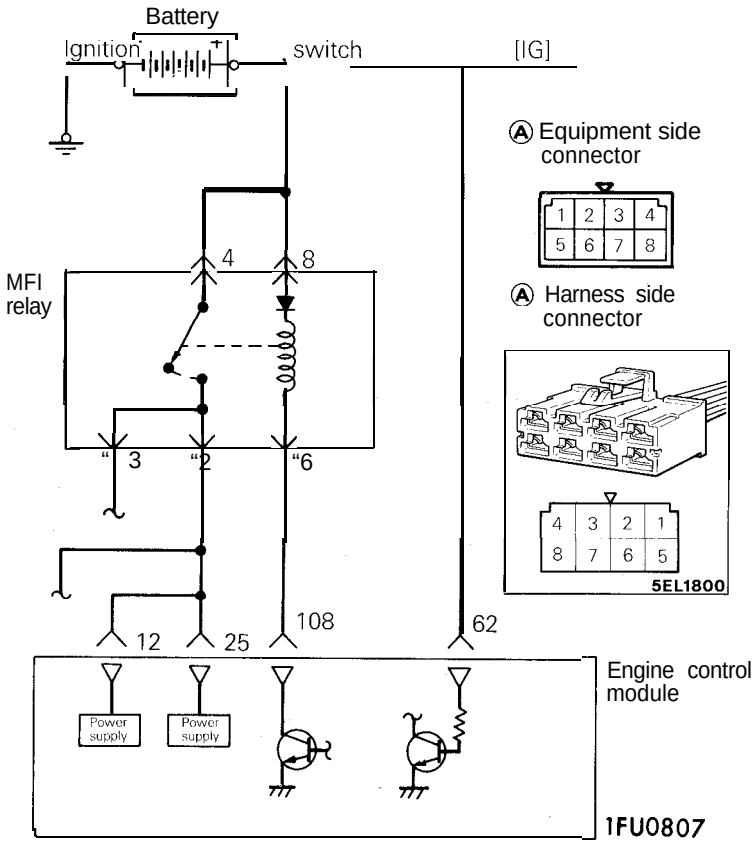

Engine control module connector

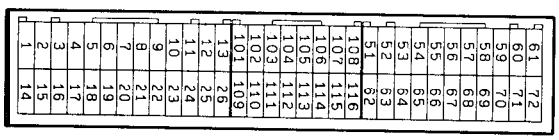

7FU0653

OPERATION

- While the ignition switch is on, battery power is supplied to the engine control module, the injector, the volume air flow sensor, etc.
- When the ignition switch is turned on,, the battery voltage is applied from the ignition switch to the engine control module, which then turns ON the power transistor to energize the MFI relay coil. This turns ON the MFI relay switch and the power is supplied from the battery to the engine control module through the MFI relay switch.

INSPECTION

Using Scan Tool

Function	Item No.	Data display	Check condition	Standard value
Data reading	16	Engine control module power voltage	Ignition switch: ON	B+

HARNESS INSPECTION

1

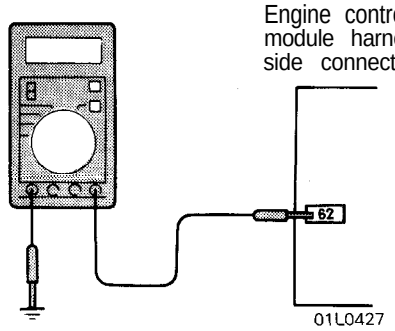

Measure the ignition switch (IG) terminal input voltage.

- Engine control module connector: Disconnected

Ignition switch	Voltage (V)
OFF	0 – 1
ON	B+

OK → 2

NG → Repair the harness. (Ignition switch – 62) or check the ignition switch

2

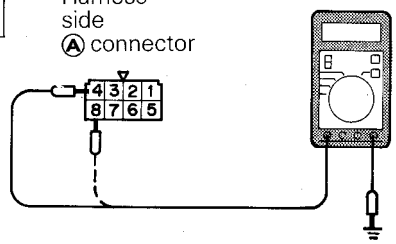

Measure the power supply voltage of the MFI relay.

- Ignition switch: OFF
- MFI relay connector: Disconnected

Voltage (V)
B+

OK → 3

NG → Repair the harness. (Battery – Ⓐ4, Ⓐ8)

3

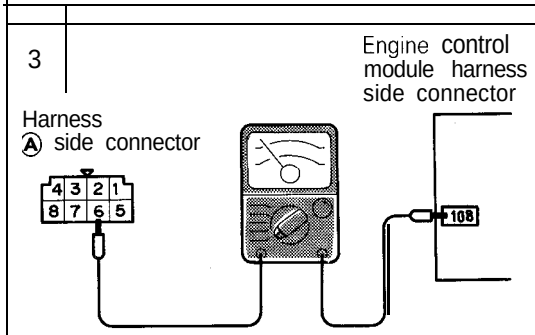

Check for an open-circuit, or a short-circuit to ground, between the engine control module and the MFI relay.

- Engine control module connector: Disconnected
- MFI relay connector: Disconnected

OK → 4

NG → Repair the harness. (Ⓐ6 – 108)

4

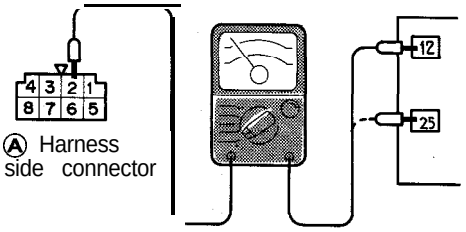

Check for an open-circuit, or a short-circuit to ground between the engine control module and the MFI relay.

- MFI relay connector: Disconnected
- Engine control module connector: Disconnected

OK → E I

NG → Repair the harness. (Ⓐ2 – 12,

5

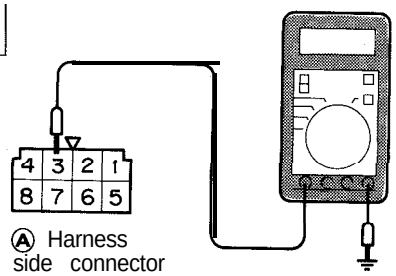

Measure power voltage to the actuator.

- MFI relay connector: Connected
- Engine control module connector: Connected

Engine	Voltage (V)
Cranking	8V or higher
Racing	B+

OK → STOP

NG → Replace the MFI relay or defective engine control module

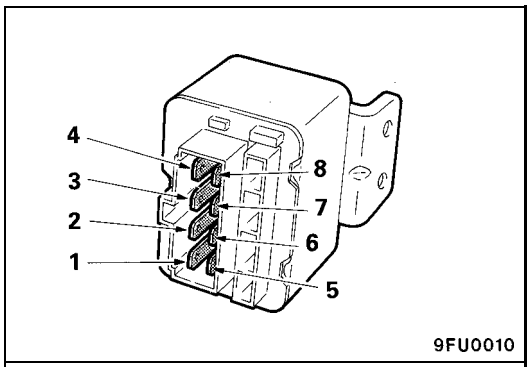

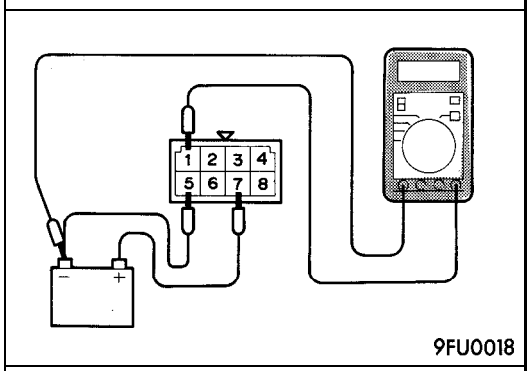

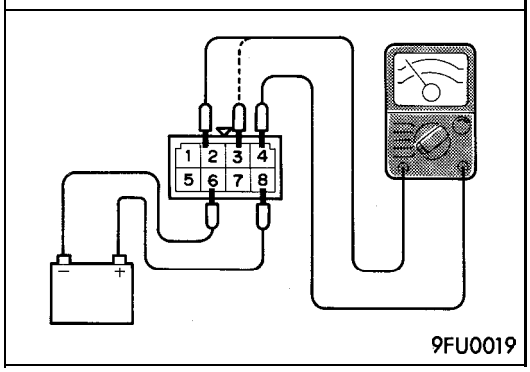

MFI RELAY INSPECTION

(1) Remove the MFI relay.
(2) Check for continuity between MFI relay terminals.

Terminal No.	Continuity
5 - 7	Conductive (approx. 90 Ω)
6 - 8	Conductive (only one direction)

(3) Using jumper wires, connect terminal ⑦ of MFI relay to battery ⊕ terminal and terminal ⑤ of MFI relay to battery ⊖ terminal.

Caution
If jumper leads are not connected properly the relay will be damaged.

(4) Connecting and disconnecting the jumper wire to battery ⊖ terminal, measure the voltage at terminal ① of the control relay.

Jumper wire	Voltage
Connected	B+
Disconnected	0V

(5) Using jumper wires, connect terminal ⑧ of MFI relay to battery ⊕ terminal and terminal ⑥ of MFI relay to battery ⊖ terminal.
(6) Connecting and disconnecting the jumper wire to battery ⊖ terminal, check the continuity across terminals @and ④ (or ③ and ④) of the MFI relay.

Jumper wire	Continuity across terminals 2 and 4	Continuity across terminals 3 and 4
Connected	Conductive (0 Ω)	Conductive (0 Ω)
Disconnected	Nonconductive (∞ Ω)	Nonconductive (∞ Ω)

(7) Replace the MFI relay if any defect is evident.

ENGINE CONTROL MODULE POWER GROUND

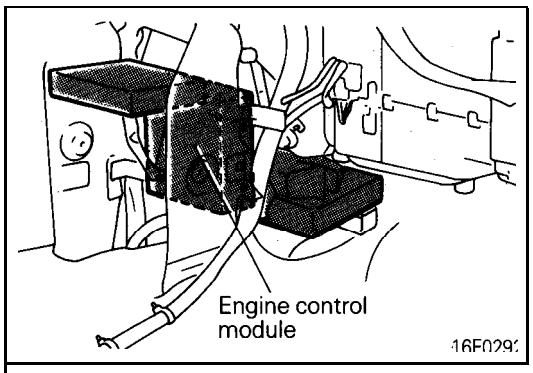

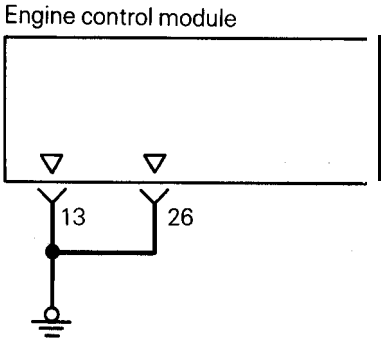

01A0191

Engine control module connector

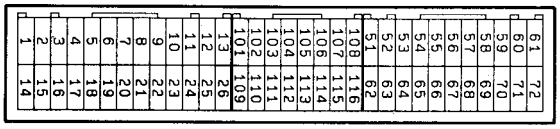

7FU0653

OPERATION

Grounds the engine control module

TROUBLESHOOTING HINTS

If the ground wire of the engine control module is not connected securely to ground, the module will not operate correctly.

HARNESS INSPECTION

1

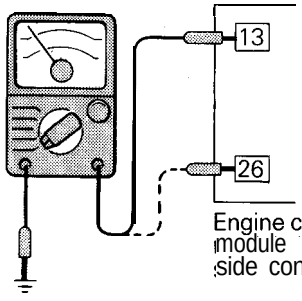

01P0150

Check for continuity of the ground circuit.

- Engine control module connector: Disconnected

OK → STOP

NG → Repair the harness. (13 – Ground: (26 – Ground)

FUEL PUMP

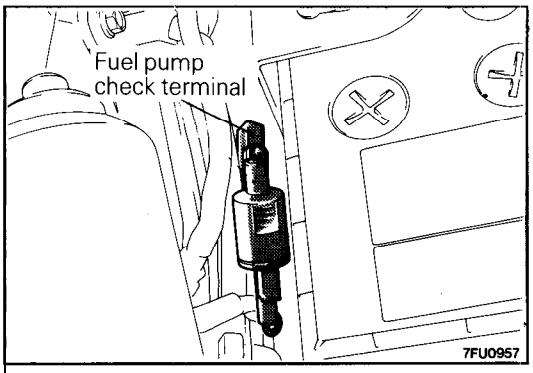

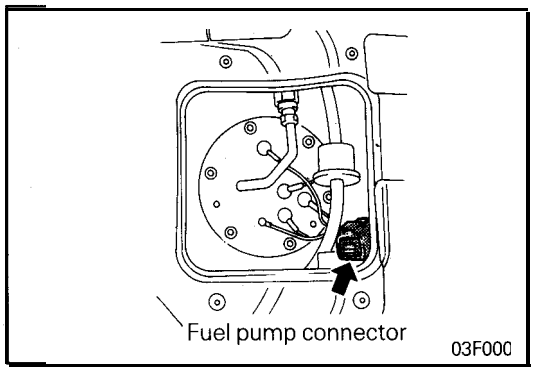

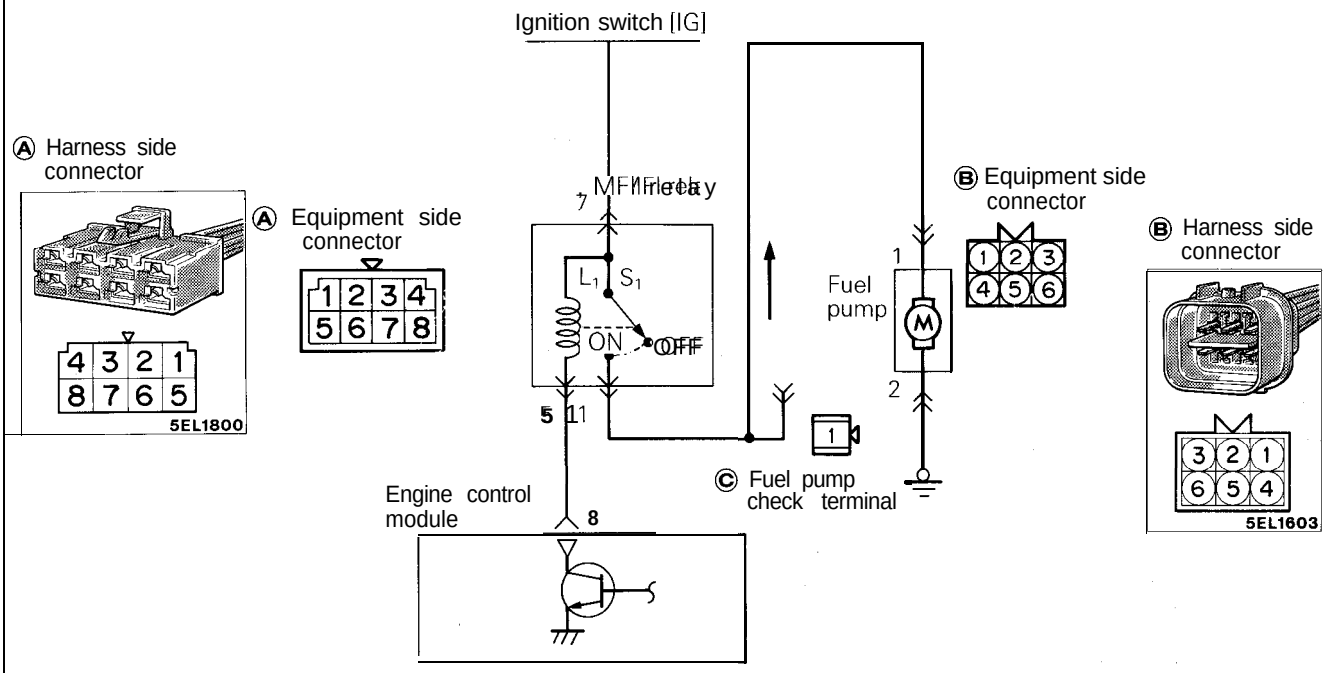

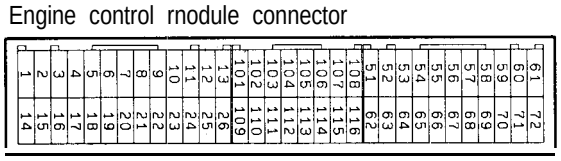

OPERATION

- The fuel pump is driven when the engine is cranking and while the engine is running.
- When the engine is cranking and while the engine is running, the engine control module turns the power transistor ON to supply power to the MFI relay coil. This causes the MFI relay switch to turn ON, and current is supplied from the ignition switch via the MFI relay switch to drive the fuel pump.

INSPECTION

Using Scan Tool

Function	Item No.	Drive	Check condition	Check content	Normal state
Actuator test	07	Fuel pump is driven to circulate fuel	• Engine cranking • Forced drive of fuel pump Check is made for above two conditions	Hold return hose with fingers to feel pulsation indicating fuel flow	Pulsation is felt
				Listen to pump operating sound near fuel tank	Operating sound is heard

HARNESS INSPECTION

1

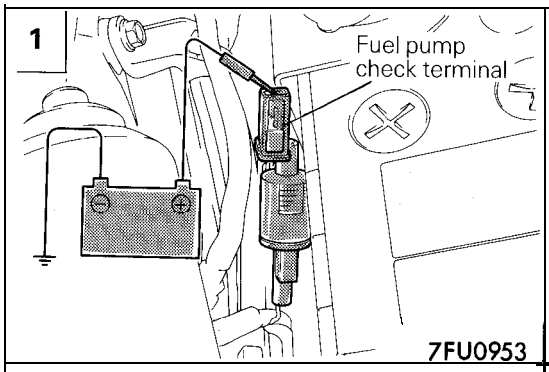

Check the fuel pump.

- Apply battery voltage to the checking terminal and operate the pump.

OK → 4

OK → 2

2

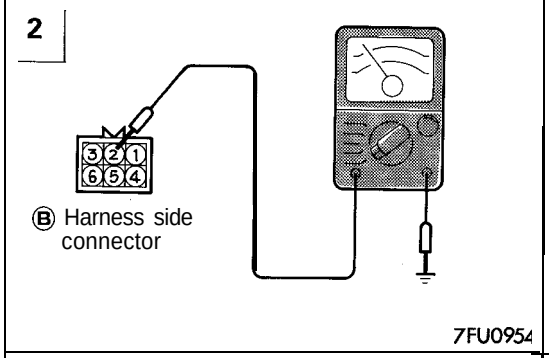

Check the ground circuit of the fuel pump.

- Fuel pump connector: Disconnected

OK → 3

OK → Repair the harness. (Ⓑ2 – Ground)

3

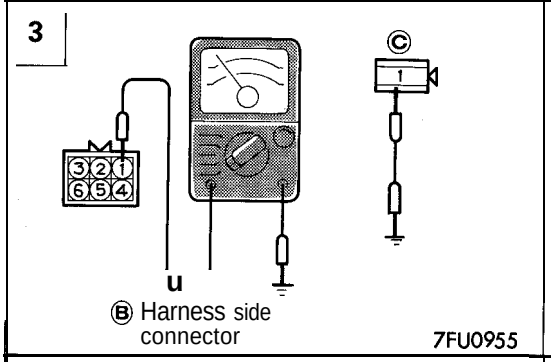

Check for continuity between the fuel pump and the checking terminal.

- Connector: Disconnected

OK → 4

OK → Repair the harness. (Ⓑ1 – Ⓒ1)

4

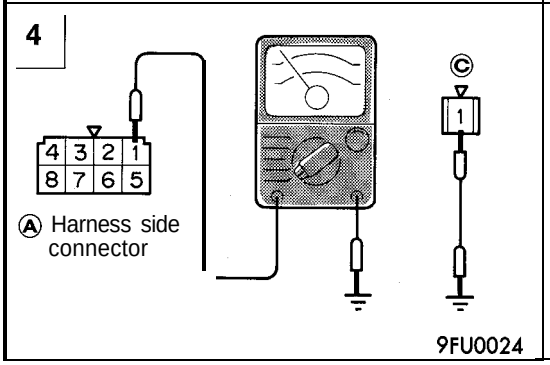

Check for continuity between the fuel pump checking terminal and the MFI relay terminals,

- MFI relay connector: Disconnected
- Fuel pump connector: Disconnected

OK → 5

OK → Repair the harness. (Ⓐ1 – Ⓒ1)

5

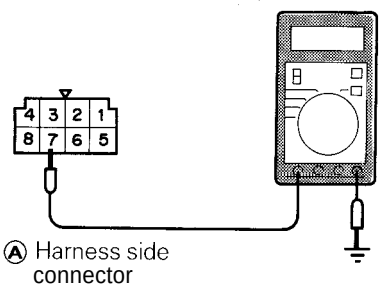

Measure the power supply voltage of the MFI relay.

- Control relay connector: Disconnected

Ignition switch	Voltage (V)
OFF	0 – 1
ON	B+

OK → **6**

NOT OK → Repair the harness. (Ignition switch – Ⓐ7) or check the ignition switch.

6

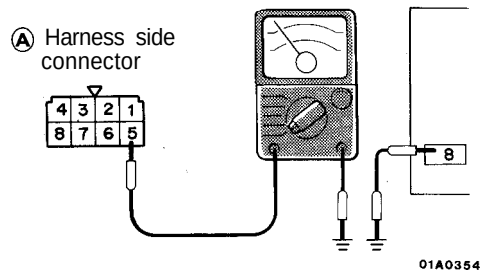

Check for an open-circuit, or a short-circuit to ground between the MFI relay and the engine control module.

- MFI relay connector: Disconnected
- Engine control module connector: Disconnected

OK → **7**

NOT OK → Repair the harness. (Ⓐ5 – 8)

7

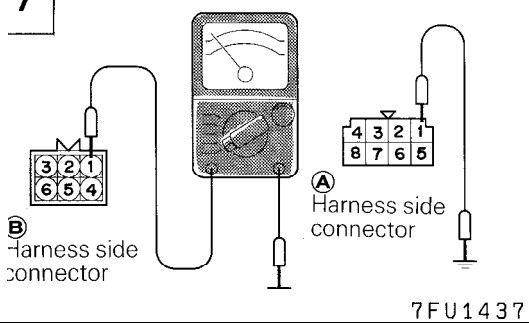

Check for an open-circuit, or a short-circuit to ground, between the MFI relay (for fuel pump) and the fuel pump.

- MFI relay (for fuel pump) connector: Disconnected
- Fuel pump connector; Disconnected

OK → **8**

NOT OK → Repair the harness. (Ⓐ1 – Ⓑ1)

8

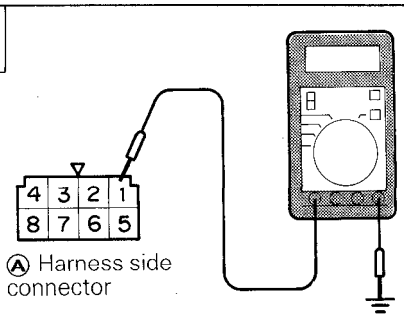

Measure the power supply voltage of the fuel pump.

- MFI relay connector: Connected
- Engine control unit connector: Connected

Engine	Voltage [V]
Cranking	8V or more
Racing	B+

OK → STOP

NOT OK → MFI relay or engine control module is defective.

MFI RELAY INSPECTION

Refer to P.14A-79

VOLUME AIR FLOW SENSOR

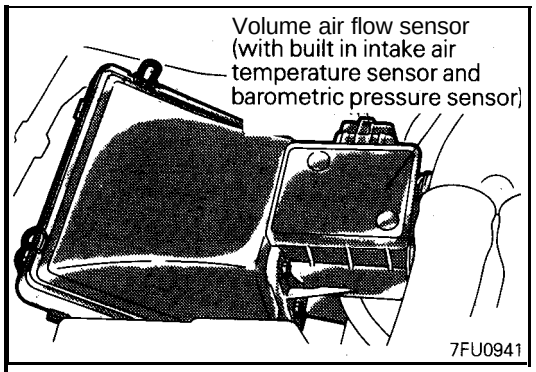

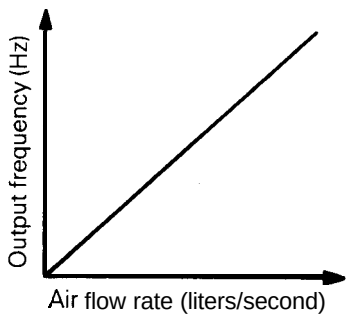

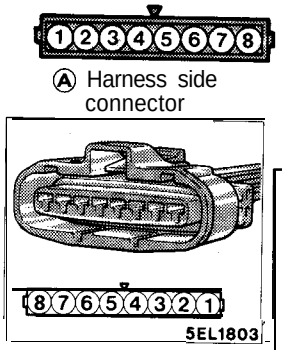

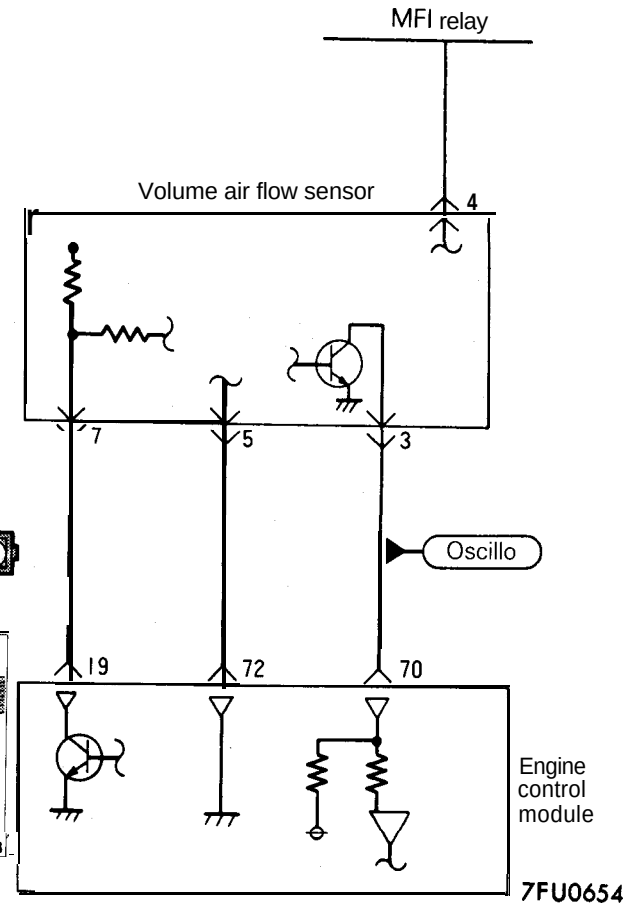

Engine control module connector

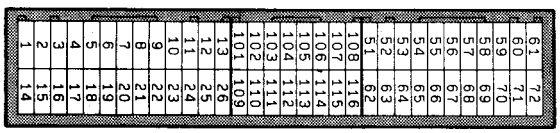

7FU0653

OPERATION

- The volume air flow sensor located in the air cleaner converts the engine intake air volume into a pulse signal of frequency proportional to the air volume and inputs it to the engine control module, which then computes the fuel injection rate, etc. based on the input signal.
- The volume air flow sensor power is supplied from the MFI relay to the volume air flow sensor and is grounded in the engine control module. The volume air flow sensor generates a pulse signal as it repeatedly opens and closes between the 5 V voltage supplied from the engine control module and ground.

TROUBLESHOOTING HINTS

Hint 1 : If the engine stalls occasionally, crank the engine and shake the volume air flow sensor harness. If the engine stalls, poor contact of the volume air flow sensor connector is suspected.

Hint 2: If the volume air flow sensor output frequency is other than 0 when the ignition switch is turned on (but not starting the engine), faulty volume air flow sensor or engine control module is suspected.

Hint 3: If the engine can be run idle even though the volume air flow sensor output frequency is out of specification, troubles are often found in other than the volume air flow sensor itself.

[Examples]

(1) Disturbed volume air flow in the air flow sensor
(Disconnected air duct, clogged air cleaner element)

(2) Poor combustion in the cylinder
(Faulty ignition plug, ignition coil, injector, incorrect compression pressure, etc.)

(3) Air leaking into the intake manifold through gap of gasket, etc.

(4) Loose EGR valve seat

INSPECTION

Using Scan Tool

<Volume Air Flow Sensor>

Function	Item No.	Data display	Check condition	Engine state	Standard value
Data reading	12	Sensor air volume frequency)	• Engine coolant temperature: 80 to 95°C (176 to 205°F) • Lights and accessories: OFF • Transaxle: Neutral (P range for vehicle with A/T) • Steering wheel: Neutral	700 rpm (Idle)	21-47 Hz <SOHC> 22-48 Hz <DOHC>
				2,000 rpm	57 – 97 Hz <SOHC> 50 – 90 Hz <DOHC>
				Racing	Frequency increases with racing

NOTE
When the vehicle is new [within initial operation of about 500 km (300 miles)], the volume air flow sensor output frequency may be about 10% higher.

<Volume Air Flow Sensor Reset Signal>

Function	Item No.	Data display	Check conditions	Engine conditions	e
Data list	34	Reset signal condition	• Engine warm up	700 rpm (Idle)	
				2,000 rpm	OFF

<Volumetric Efficiency>

Function	Item No.	Data display	Check condition	Engine state	Standard value
Data list	37	Volumetric efficiency	• Engine coolant temperature: 80 to 95°C (176 to 205°F) • Lights, electric cooling fan and accessory operation: OFF • Transaxle: Neutral (P range for vehicle with A/T) • Steering wheel: Neutral	700 rpm (Idle)	15535%
				2,000 rpm	15-35 %
				Racing	Frequency increases with racing

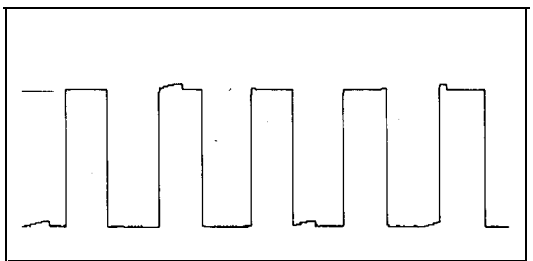

Regular waveform

03A0203

Using Oscilloscope

(1) Run the engine at idle speed.
(2) Connect the probe to the oscilloscope pick-up point as shown in the circuit diagram, and check the waveform.

HARNESS INSPECTION

1

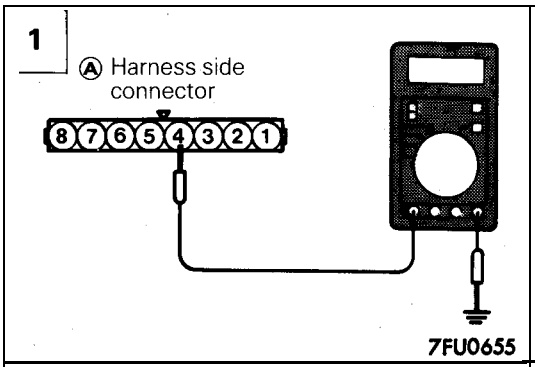

Measure the power supply voltage.

- OK → 2
- OK → Repair the harness (Ⓐ 4 – Control relay) or check the control relay.

2

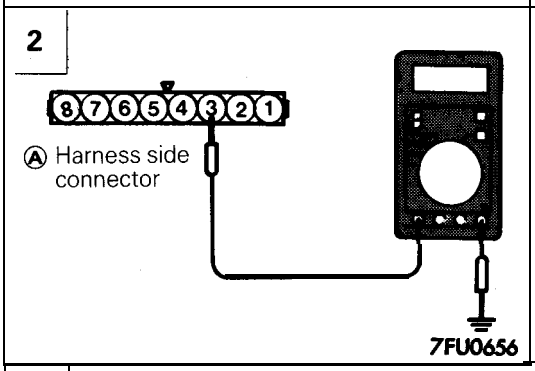

Measure the terminal voltage.

- Connector: Disconnected
- Ignition switch: ON

Voltage (V)
4.8 – 5.2

- OK → 3
- OK → Repair the harness (Ⓐ 3 – 70)

3

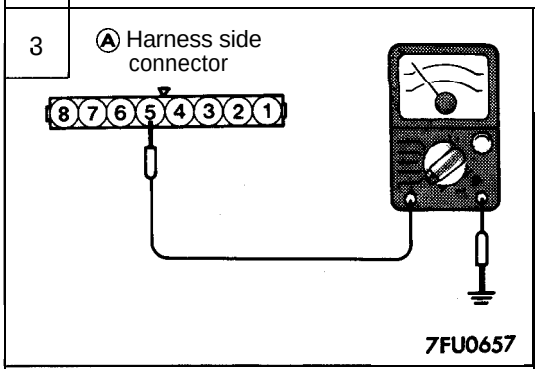

Check for continuity of the ground circuit.

- Connector: Disconnected

- OK → STOP
- OK → Repair the harness. (Ⓐ 5 – 72)

4

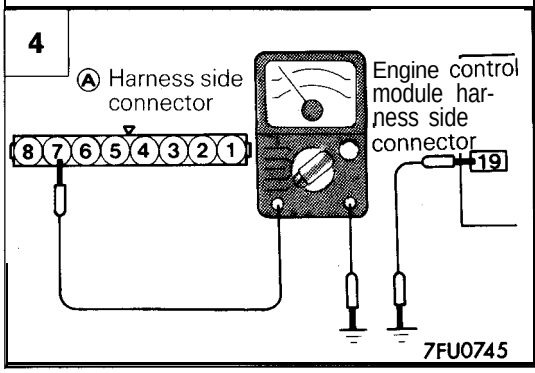

Check for continuity between the volume air flow sensor and the engine control unit.

- Volume air flow sensor connector: Disconnected
- Engine control module connector: Disconnected

- OK → STOP
- OK → Repair the harness. (Ⓐ 7 – 19)

INTAKE AIR TEMPERATURE SENSOR

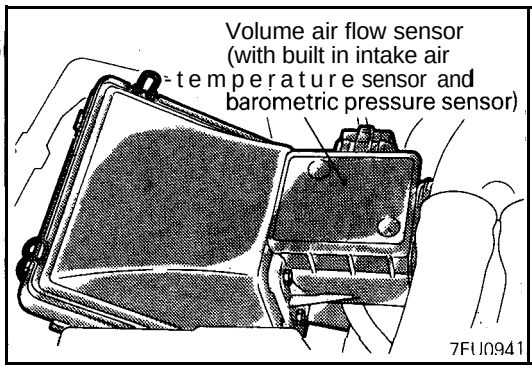

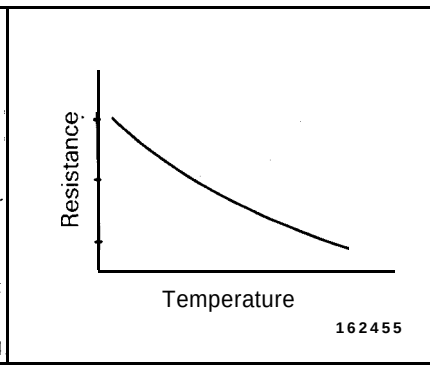

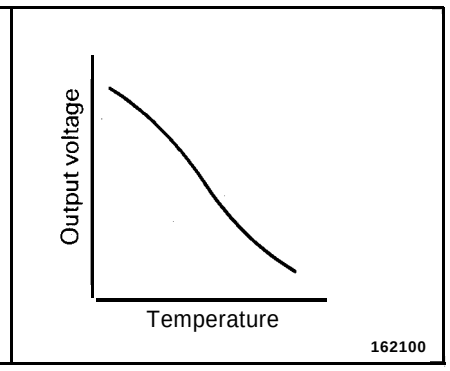

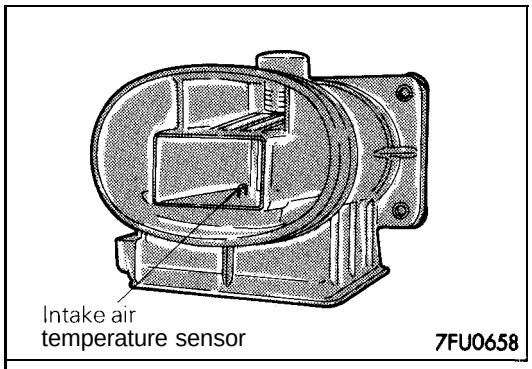

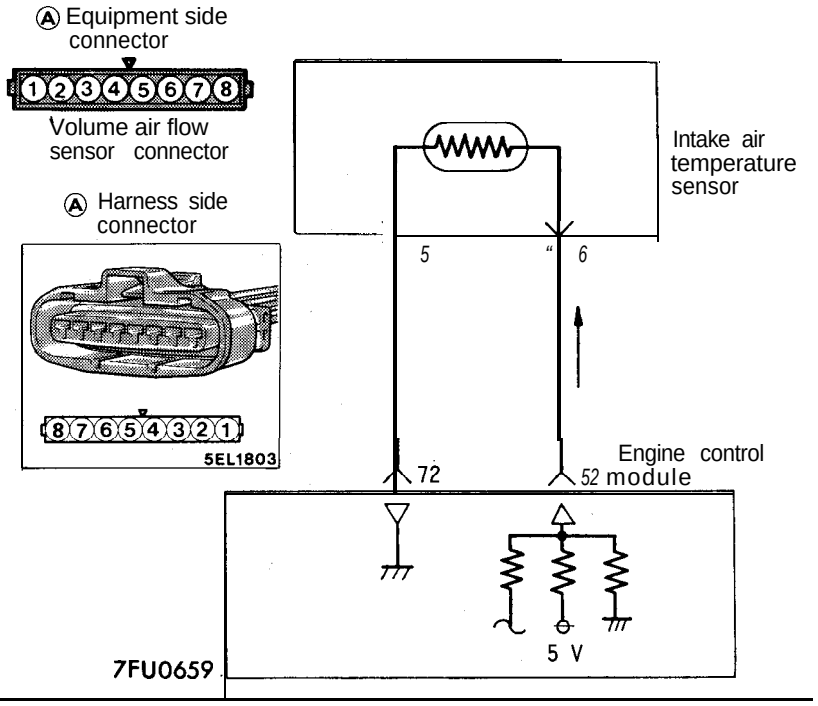

OPERATION

- The intake air temperature sensor converts the engine intake air temperature into a voltage and inputs it to the engine control module, which then corrects the fuel injection rate, etc. based on the input signal.
- The 5 V power in the engine control module is supplied via a resistor in the module to the intake air temperature sensor. Via the sensor which is a kind of resistor, it is grounded in the engine control module. The intake air temperature sensor resistor has the characteristic of decreasing its resistance decreases as the intake air temperature rises.
- The intake air temperature sensor terminal voltage increases or decreases as the sensor resistance increases or decreases. Therefore, the intake air temperature sensor terminal voltage changes with the intake air temperature, decreasing as the temperature rises.

TROUBLESHOOTING HINTS

The intake air temperature sensor senses the intake air temperature in the air cleaner so that it may indicate a temperature different from outside temperature depending on engine operating state.

INSPECTION

Using Scan Tool

Function	Item No.	Data display	Check condition	Intake air temperature	Standard value
Data reading	13	Sensor temperature	Ignition switch: ON or engine running	At -20°C (-4°F)	-20°C
				At 0°C (32°F)	0°C
				At 20°C (68°F)	20°C
				(At 40°C (104°F)	40°C
				At 80°C (176°F)	80°C

HARNESS INSPECTION

1

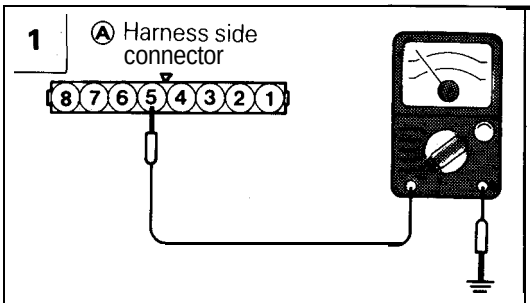

Check for continuity of the ground circuit.

- Connector: Disconnected

OK → 2

NG → Repair the harness. (Ⓐ 5 – 72)

2

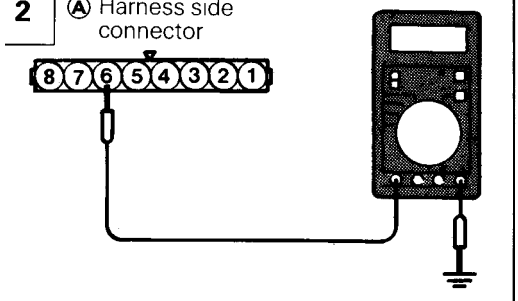

Measure the power supply voltage.

- Connector: Disconnected
- Ignition switch: ON

Voltage (V)
4.5 – 4.9

OK → STOP

NG → Repair the harness. (Ⓐ 6 – 52)

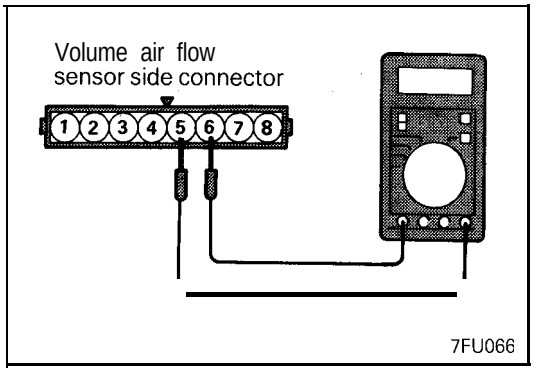

SENSOR INSPECTION

(1) Disconnect the volume air flow sensor connectors.
(2) Measure resistance between terminals ⑤ and ⑥.

Temperature [°C (°F)]	Resistance (kΩ)
0 (32)	6.0
20 (68)	2.7
80 (176)	0.4

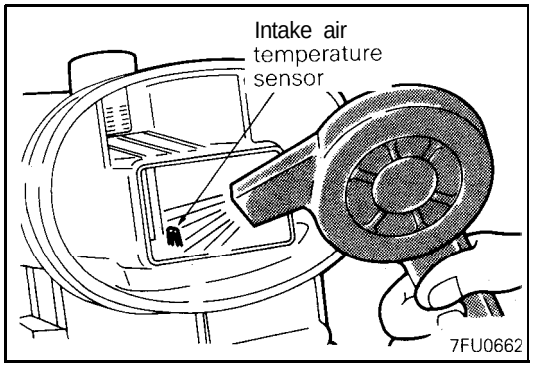

(3) Measure resistance while heating the sensor using a hair drier.

Temperature [°C (°F)]	Resistance (kΩ)
Higher	Smaller

(4) If resistance does not decrease as heat increases or the resistance remains unchanged, replace the volume air flow sensor assembly.

BAROMETRIC PRESSURE SENSOR

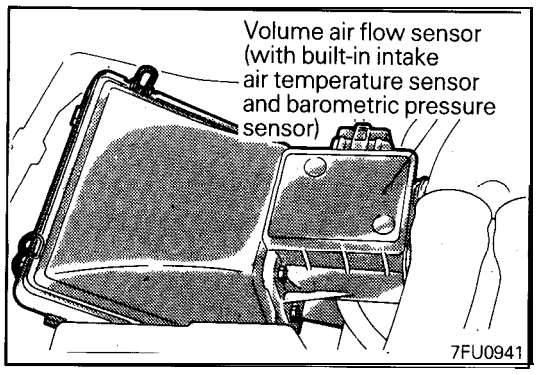

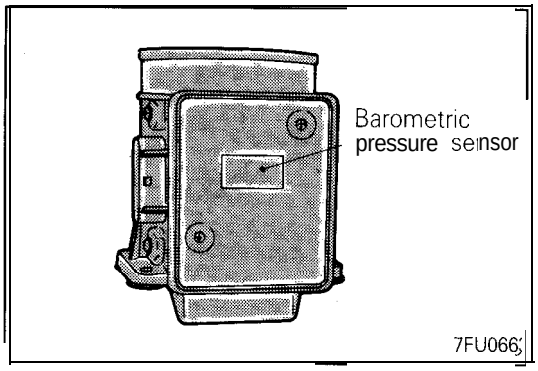

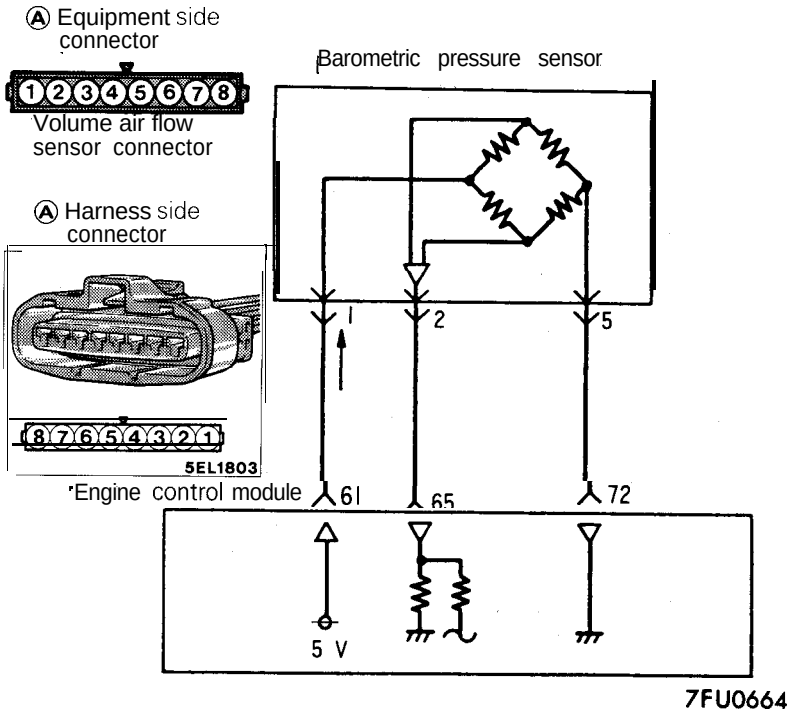

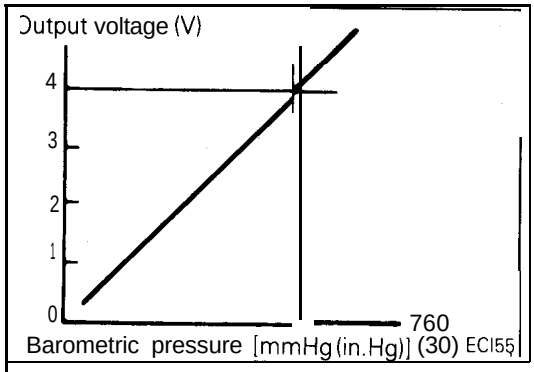

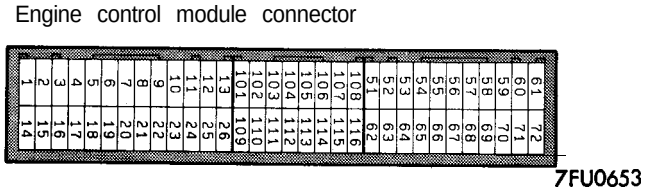

OPERATION

- The barometric pressure sensor converts the barometric pressure into a voltage and inputs it to the engine control module, which then corrects the fuel injection rate, etc. based on the input signal.
- The 5 V power in the engine control module is supplied to the barometric pressure sensor. Through the circuit in the sensor, it is grounded in the engine control module.
- The barometric pressure sensor output voltage which is proportional to the barometric pressure (absolute pressure) is supplied to the engine control module.

TROUBLESHOOTING HINTS

Hint 1 : If the barometric pressure sensor is faulty, poor driveability is caused at high altitude, in particular.
Hint 2: If the pressure indication of the barometric pressure sensor drops significantly during high speed driving, check the air cleaner for clogging.

INSPECTION

Using Scan Tool

Function	Itern No.	Data display	Check condition	Altitude	Standard value
Data reading	25	Sensor pressure	Ignition switch: ON	At 0 m (0 ft.)	101kPa (760 mmHg)
				At 600 m (1,969 ft.)	95 kPa (710 mmHg)
				At 1,200 m (3,937 ft.)	88 kPa (660 mmHg)
				At 1,800 m (5,906 ft.)	81 kPa (610 mmHg)

HARNESS INSPECTION

1

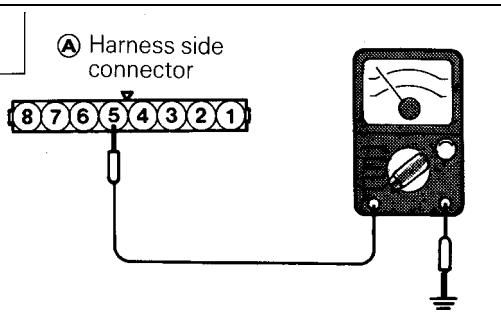

Check for continuity of the ground circuit.

- Connector: Disconnected

OK → 2

NG → Repair the harness. (Ⓐ5 -)

2

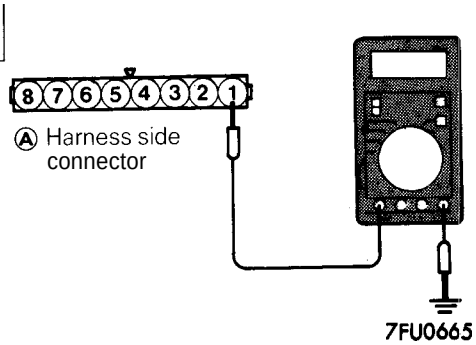

Measure the power supply voltage of the barometric pressure sensor.

- Connector: Disconnected
- Ignition switch: ON

Voltage (V)
4.8 – 5.2

OK → 3

NG → Repair the harness. (Ⓐ1 -)

3

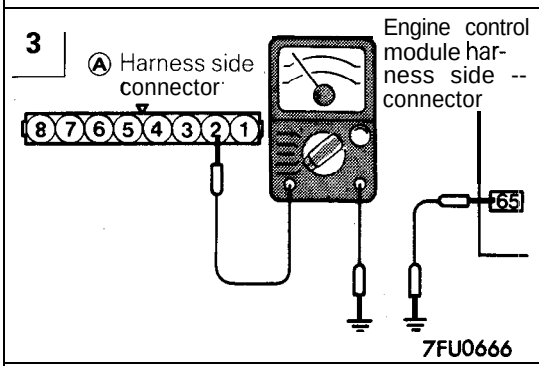

Check for an open-circuit, or a short-circuit to ground between the engine control module and the barometric pressure sensor.

- Volume air flow sensor connector: Disconnected
- Engine control module connector: Disconnected

OK → STOP

NG → Repair the harness. (Ⓐ2 – 65)

ENGINE COOLANT TEMPERATURE SENSOR

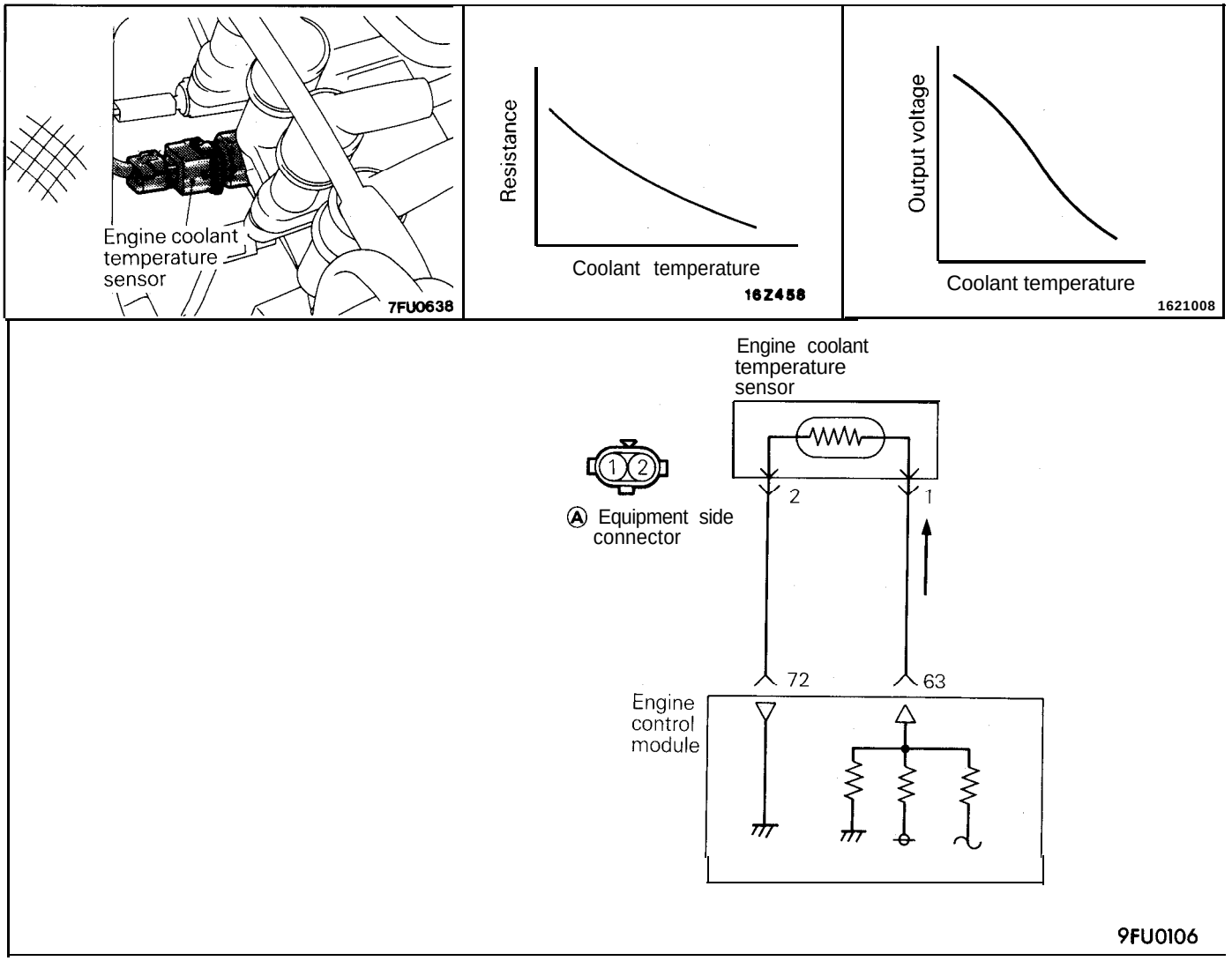

OPERATION

- The engine coolant temperature sensor converts the engine coolant temperature into a voltage and inputs it to the engine control module, which then controls the fuel injection rate and fast idle speed when the engine is cold based on the input signal.
- The 5 V power in the engine control module is supplied via a resistor in the module to the engine coolant temperature sensor. Through the sensor which is a kind of resistor, it is grounded in the engine control module. The engine coolant temperature sensor resistor has the characteristic of decreasing its resistance decreases as the coolant temperature rises.
- The engine coolant temperature sensor terminal voltage increases or decreases as the sensor resistance increases or decreases. Therefore, the engine coolant temperature sensor terminal voltage changes with the coolant temperature, decreasing as the temperature rises.

TROUBLESHOOTING HINTS

If the fast idle speed is inadequate or the engine emits dark smoke during engine warm up operation, the engine coolant temperature sensor is often faulty.

INSPECTION

Using Scan Tool

Function	Item No.	Data display	Check condition	Coolant temperature	Standard value
Data reading	21	Sensor temperature	Ignition switch: ON or engine operating	At -20°C (-4°F)	–20°C
				At 0°C (32°F)	0°C
				At 20°C (68°F)	20°C
				At 40°C (104°F)	40°C
				At 80°C (176°F)	80°C

HARNESS INSPECTION

1 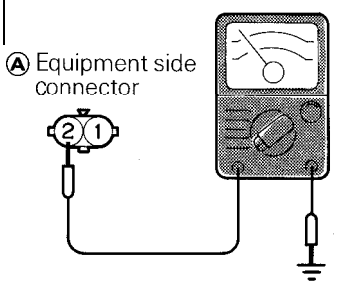 9FU0112	Check for continuity of the ground circuit. • Connector: Disconnected	OK →	2
		NG →	Repair the harness. (Ⓐ2 – 72)
2 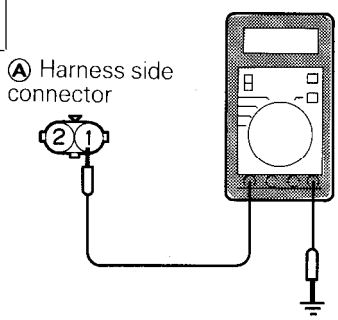 9FU0114	Measure the power supply voltage. • Connector: Disconnected • Ignition switch: ON Voltage (V): 4.5 – 4.9	OK →	STOP
		NG →	Repair the harness. (Ⓐ1 – 63)

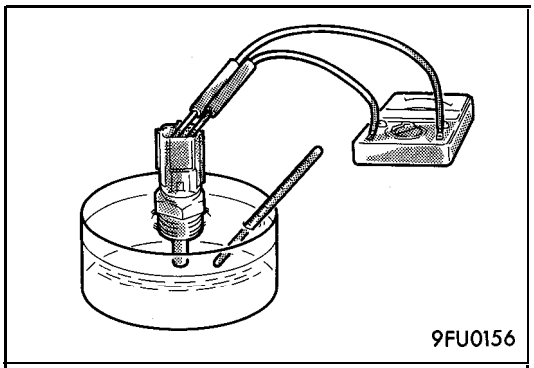

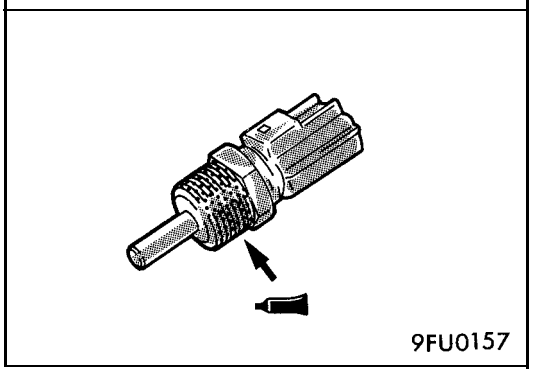

SENSOR INSPECTION

(1) Remove engine coolant temperature sensor from the intake manifold.

(2) With temperature sensing portion of engine coolant temperature sensor immersed in hot water, check resistance.

Temperature °C (°F)	Resistance (kΩ)
0 (32)	5.8
20 (68)	2.4
40 (104)	1.1
80 (176)	'b.3

(3) If the resistance deviates from the standard value greatly, replace the sensor.

INSTALLATION

(1) Apply sealant to threaded portion.

Specified sealant: MOPAR Part No. 4318034 or equivalent

(2) Install engine coolant temperature sensor and tighten it to specified torque.

Sensor tightening torque: 30 Nm (22 ft.lbs.)

(3) Fasten harness connectors securely.

THROTTLE POSITION SENSOR

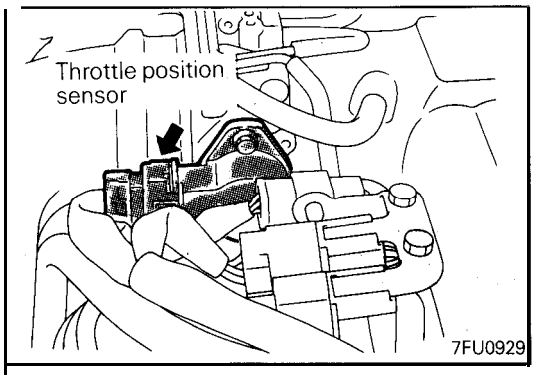

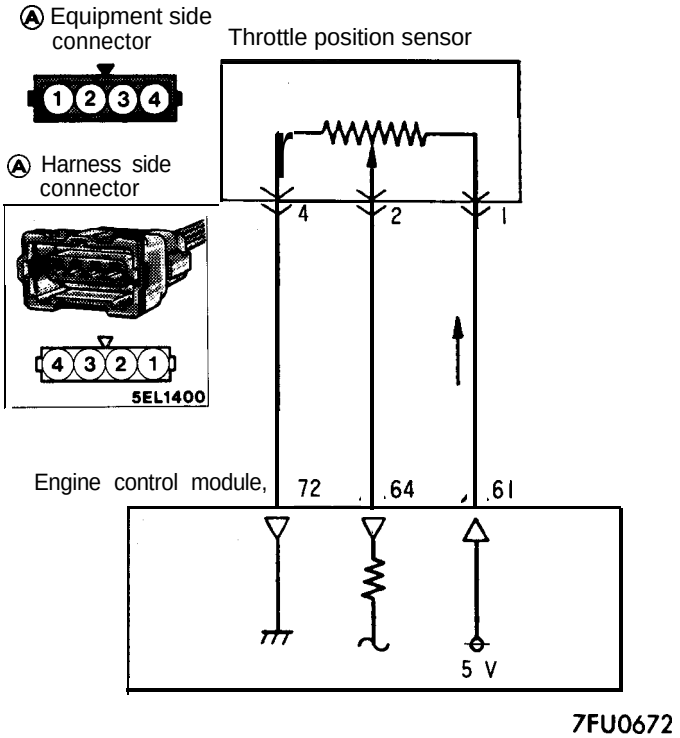

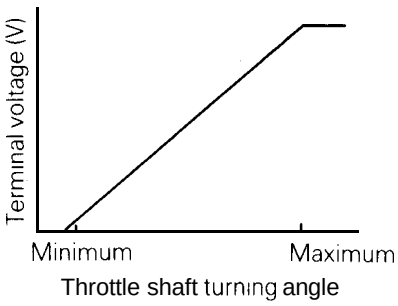

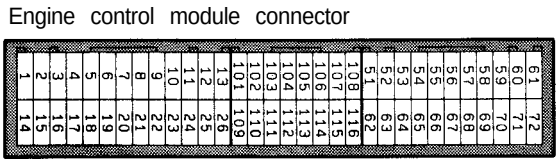

OPERATION

- The throttle position sensor converts the throttle position opening into a voltage and inputs it to the engine control module, which then controls the fuel injection based on the input signal.
- The 5 V power in the engine control module is supplied to the throttle position sensor. Through the resistor in the sensor, it is grounded in the engine control module.
- As the throttle valve shaft rotates from the idle position to wide open position, the resistance between the variable resistor terminal of the throttle position sensor and the ground terminal increases. As a result, the voltage at the throttle position sensor variable resistance terminal also increases.

TROUBLESHOOTING HINTS

Hint 1 : The throttle position sensor signal is more important in the control of automatic transaxle than in the engine control. Shifting shock and other troubles will be caused if this sensor is faulty.

Hint 2: If the output voltage of the throttle position sensor is out of specification, adjust the sensor and check the voltage again. If there is an evidence of disturbed fixed SAS setting, adjust the fixed SAS.

INSPECTION

Using Scan Tool

Function	Item No.	Data display	Check condition	Throttle valve	Standard value
Data reading	14	Sensor voltage	Ignition switch: left ON for 15 seconds or more	At idle position	300 – 1,000 mV
				Open slowly	Increases with valve opening
				Open widely	4,500 – 5,500 mV

HARNESS INSPECTION

1

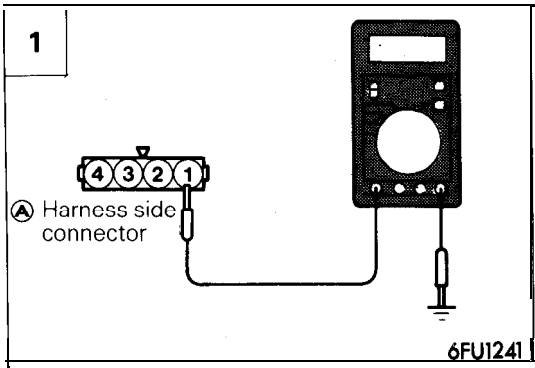

Measure the power supply voltage of the throttle position sensor.

- Connector: Disconnected
- Ignition switch: ON

Voltage (V)
4.8 – 5.2

OK → 2

NG → Repair the harness. (Ⓐ 1 – 61)

2

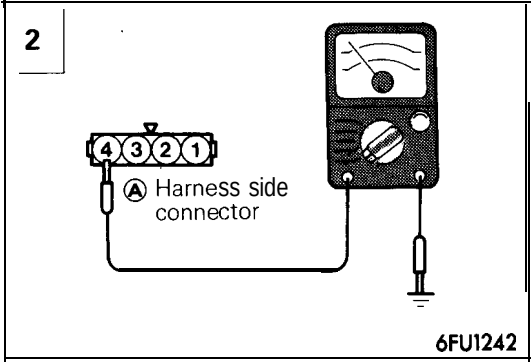

Check for continuity of the ground circuit.

- Connector: Disconnected

OK → 3

NG → Repair the harness. (Ⓐ 4 – 72)

3

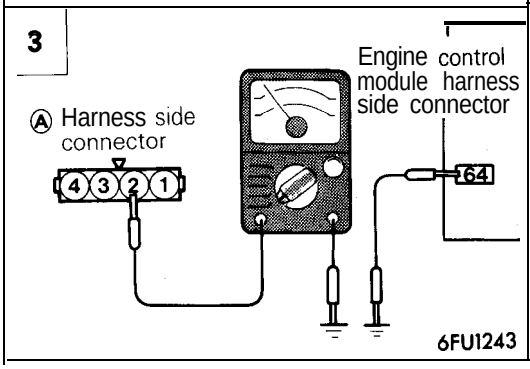

Check for an open-circuit, or a short-circuit to ground between the engine control module and the throttle position sensor.

- Throttle oosition sensor connector: Disconnected
- Engine control module connector: Disconnected
- Connector of any control module which uses TPS output signals like ECM: Disconnected

OK → STOP

NG → Repair the harness. (Ⓐ 2 – 64)

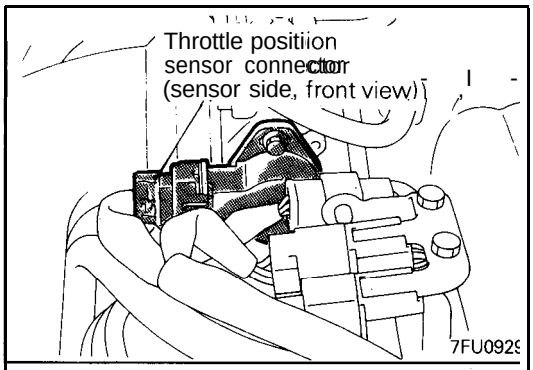

SENSOR INSPECTION

(1) Disconnect the throttle position sensor connector.

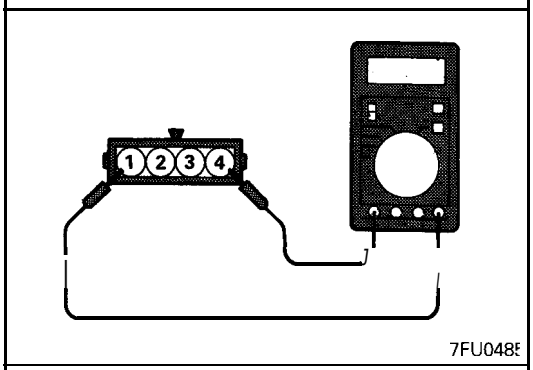

(2) Measure resistance between terminal ④ (sensor ground) and terminal ① (sensor power).

Standard value: 3.5 – 6.5 kΩ

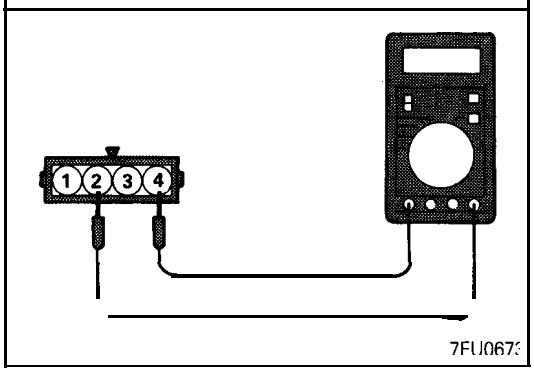

(3) Connect a pointer type ohmmeter between terminal ④ (sensor ground) and terminal ② (sensor output).
(4) Operate the throttle valve slowly from the idle position to the full open position and check that the resistance changes smoothly in proportion with the throttle valve opening angle.
(5) If the resistance is out of specification, or fails to change smoothly, replace the throttle position sensor.

Throttle position sensor installation torque: 2.0 Nm (1.5 ft.lbs.)

For the idle position switch and throttle position sensor adjusting procedure, refer to P. 14A-65.

CLOSED THROTTLE POSITION SWITCH

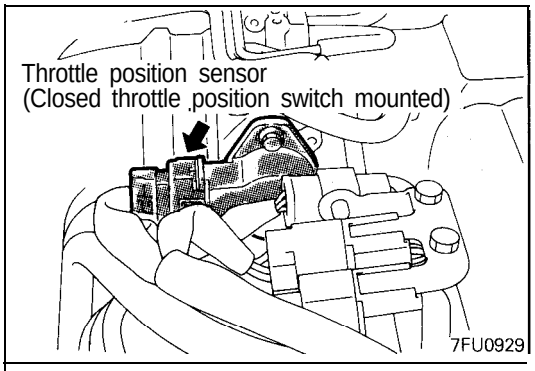

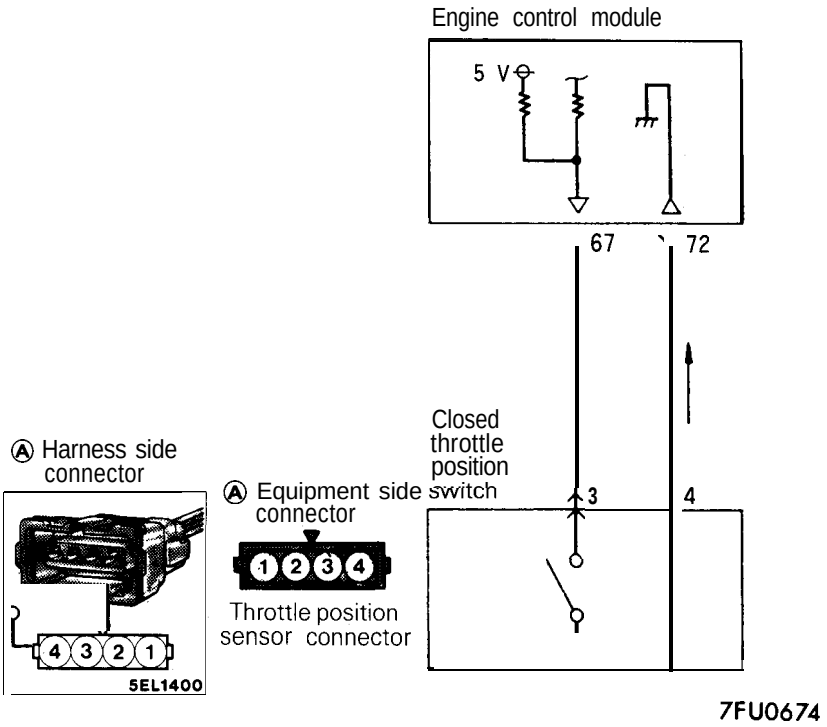

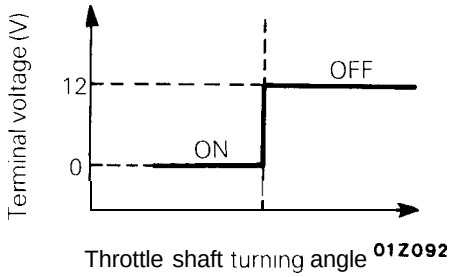

7FU0674

OPERATION

- The closed throttle position switch senses whether the accelerator pedal is depressed or not, converts it into high/low voltage and inputs the voltage to the engine control module, which then controls the idle air control motor based on the input signal.
- The voltage in the engine control module is applied to the closed throttle position switch through a resistor. When the accelerator pedal is released, the closed throttle position switch is turned on to conduct the voltage to ground. This causes the closed throttle position switch terminal voltage to go low from high.

TROUBLESHOOTING HINTS

If the closed throttle position switch harness and individual part check results are normal but the closed throttle position switch output is abnormal, the following troubles are suspected.
(1) Poorly adjusted accelerator cable or auto-cruise control cable
(2) Poorly adjusted fixed SAS

INSPECTION

Using Scan Tool

Function	Item No.	Data display	Check condition	Throttle valve	Normal indication
Data reading	26	Switch state	Ignition switch: ON (check by operating accelerator pedal repeatedly)	At idle position	ON
				Open a little	OFF

HARNESS INSPECTION

1

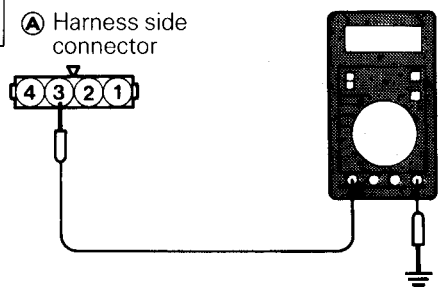

7FU0675

Measure the power supply voltage of the closed throttle position switch.

- Connector: Disconnected
- Ignition switch: ON

Voltage (V)
4 or more

OK → 2

NG → Repair the harness. (Ⓐ3 – 67)

2

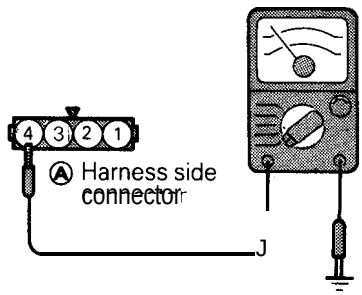

6FU 1242

Check for continuity of the ground circuit.

- Connector: Disconnected

OK → STOP

NG → Repair the harness. (Ⓐ4 – 72)

SENSOR INSPECTION

(1) With the accelerator pedal released, check to be sure that the throttle valve lever or the fixed SAS is pushed.

NOTE
If it is not pushed, adjust the fixed SAS (Refer to P.14A-67.)

(2) Disconnect the throttle position sensor connector.

(3) Check the continuity across the throttle position sensor connector terminal ④ (Sensor ground) and ③ (Closed throttle position switch).

Accelerator pedal	Continuity
Depressed	Non-conductive (∞ Ω)
Released	Conductive (0 Ω)

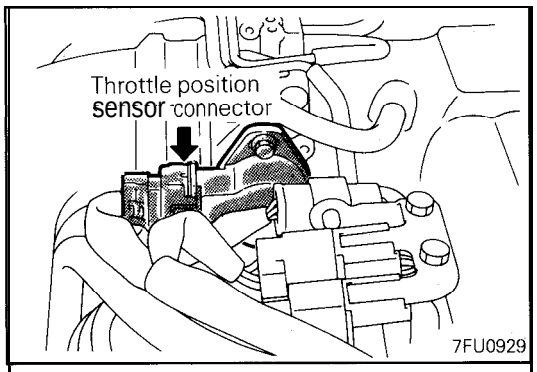

7FU0929

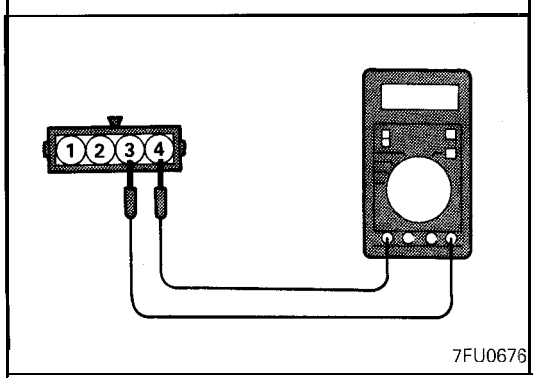

7FU0676

NOTE
If there is no continuity when the accelerator pedal is returned, loosen the throttle-position sensor installation screw; then, after turning all the way in the counterclockwise direction, check again.

(4) Replace the throttle-position sensor (closed throttle position switch incorporated) if there is a malfunction.

NOTE
For the closed throttle position switch and throttle position sensor adjusting procedure, refer to P.14A-65.

CAMSHAFT POSITION SENSOR <SOHC>

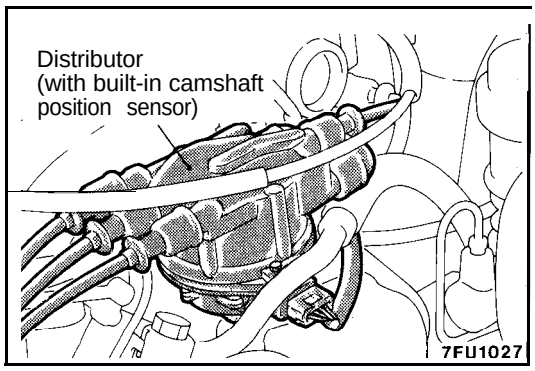

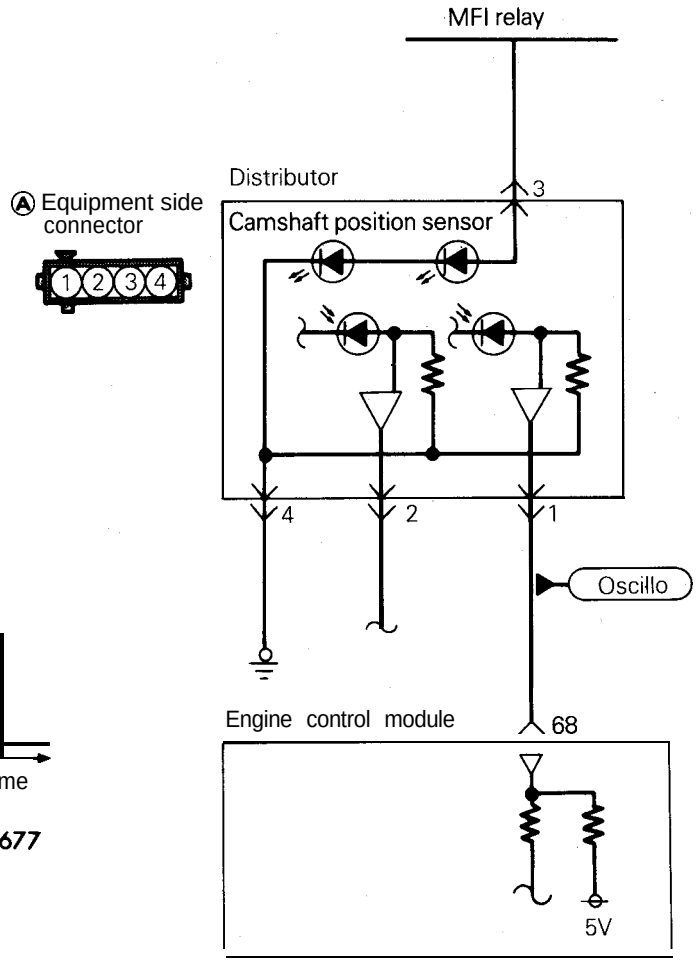

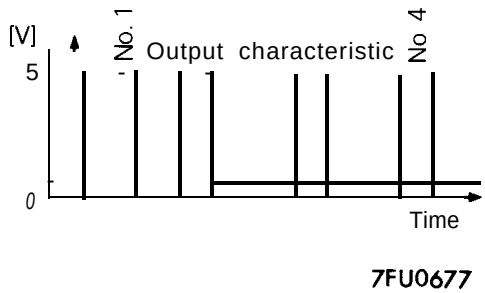

7FU0493

OPERATION

- The camshaft position sensor senses the top dead center on compression stroke of the No. 1, converts it into a pulse signal and inputs it to the engine control module, which then controls the fuel injection sequence, etc. based on the input signal.
- Power to the camshaft position sensor is supplied from the MFI relay and is grounded to the body. The camshaft position sensor generates a pulse signal as it repeatedly connects and disconnects between 5 V voltage supplied from the engine control module and ground.

TROUBLESHOOTING HINTS

Hint 1 : If the camshaft position sensor does not function correctly, correct sequential injection is not made so that the engine may stall, run irregularly at idle or fail to accelerate normally.

Hint 2: If the sensor outputs a pulse signal when the ignition switch is turned ON (with the engine not running), a faulty camshaft position sensor or engine control module is suspected.

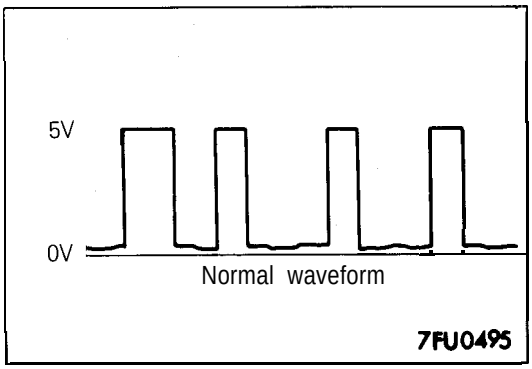

INSPECTION

Using Oscilloscope

(1) Run the engine at an idle speed.
(2) Connect the probe to the oscilloscope pick-up point as shown in the circuit diagram, and check the waveform.

HARNESS INSPECTION

1	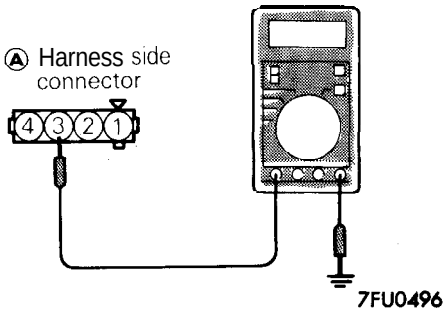	Measure the power supply voltage. • Connector: Disconnected • Ignition switch: ON Voltage (V): B+	OK →	2
			NG →	Repair the harness. (Ⓐ3 – MFI relay)
2	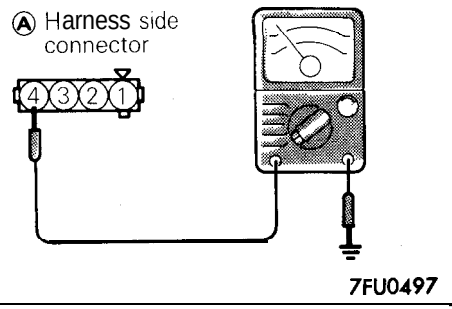	Check for continuity of the ground circuit. • Connector: Disconnected	OK →	3
			NG →	Repair the harness. (Ⓐ4 – Ground)
3	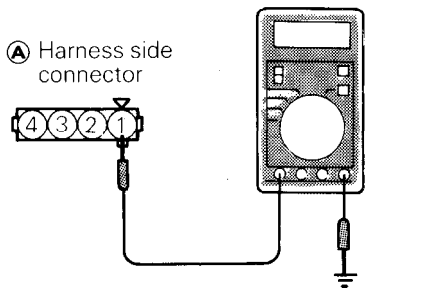	Check the voltage of the output circuit. • Connector: Disconnected • Ignition switch: ON Voltaae (V): 4.8 – 5.2	OK →	STOP
			NG →	Repair the harness. (Ⓐ1 – 68)

CAMSHAFT POSITION SENSOR <DOHC>

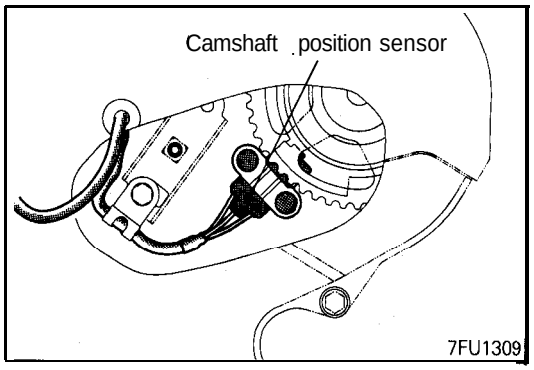

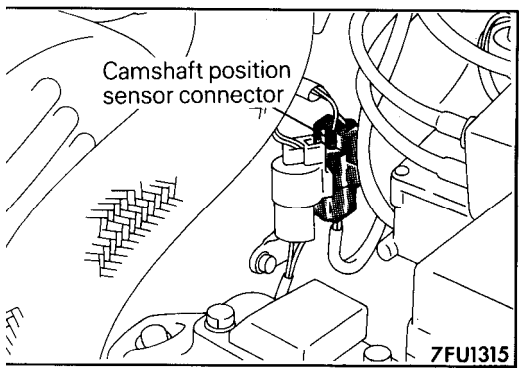

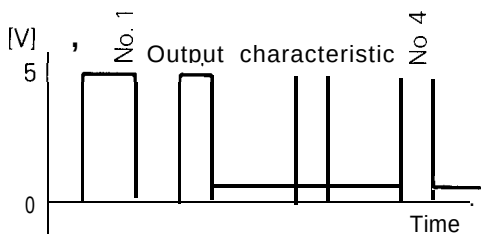

7FU0677

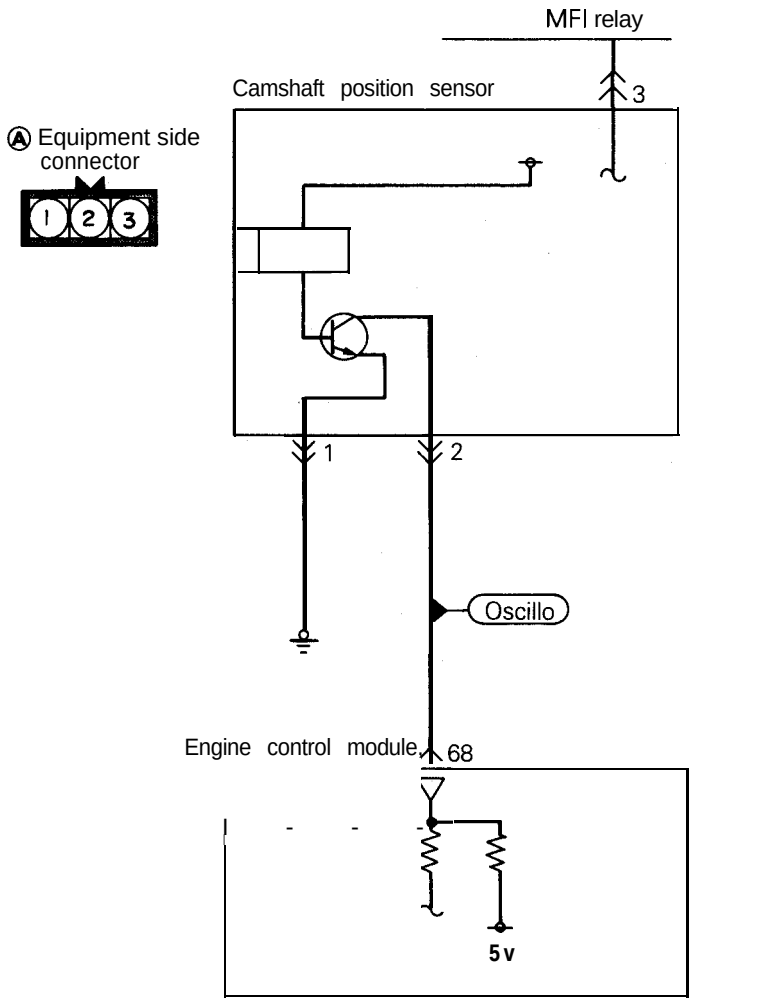

6AF0054

Engine control module connector

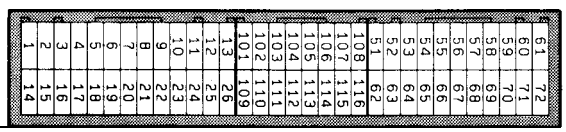

7FU0653

OPERATION

- The camshaft position sensor senses the top dead center on compression stroke, converts it into a pulse signal and inputs it to the engine control module, which then controls the fuel injection sequence, etc. based on the input signal.
- Power to the camshaft position sensor is supplied from the MFI relay and is grounded to the body. The camshaft position sensor generates a pulse signal as it repeatedly connects and disconnects between 5 V voltage supplied from the engine control module and ground.

TROUBLESHOOTING HINTS

Hint 1 : If the camshaft position sensor does not function correctly, correct sequential injection is not made so that the engine may stall, run irregularly at idle or fail to accelerate normally.

Hint 2: If the sensor outputs a pulse signal when the ignition switch is turned ON (with the engine not running), a faulty camshaft position sensor or engine control module is suspected.

INSPECTION

Refer to P.14A-101.

HARNESS INSPECTION

1

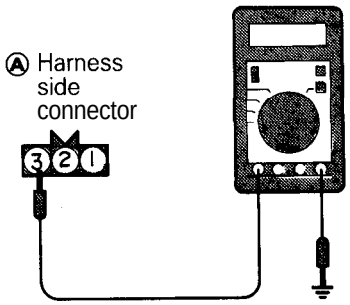

7FU1330

Measure the power supply voltage.
- Connector: Disconnected
- Ignition switch: ON

Voltage (V)
B+

OK → 2

OK → Repair the harness. (Ⓐ3 – MFI relay)

2

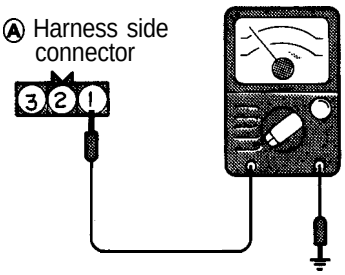

6AF0057

Check for continuity of the ground circuit.
- Connector: Disconnected

OK → 3

OK → Repair the harness. (Ⓐ1 – Ground)

3

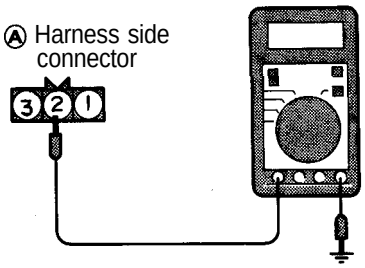

6AF0059

Measure the impressed voltage.
- Connector: Disconnected
- Ignition switch: ON

Voltage (V)
4.8 – 5.2

OK → STOP

OK → Repair the harness. (Ⓐ2 – 68)

CRANKSHAFT POSITION SENSOR <SOHC>

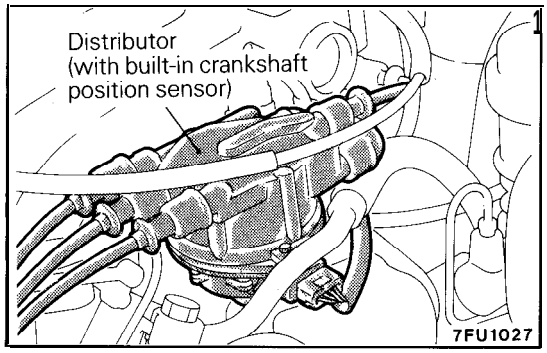

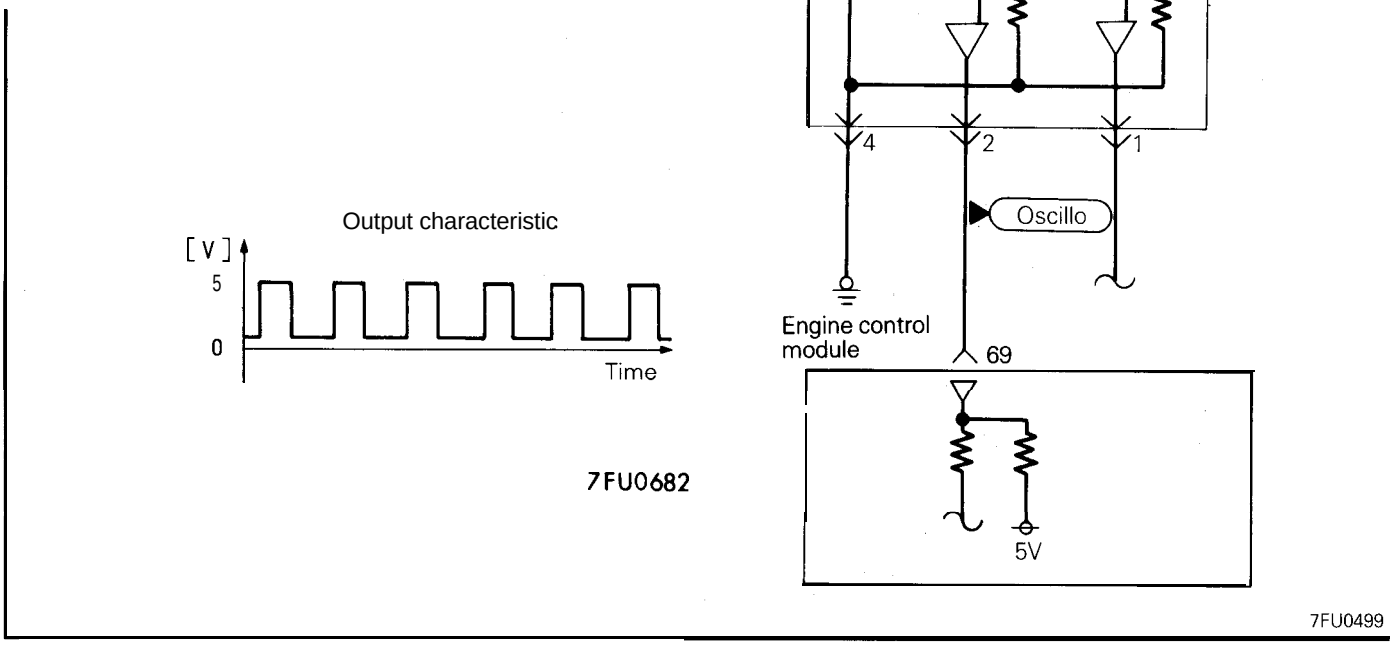

OPERATION

- The crankshaft position sensor senses the crank angle (piston position) of each cylinder, converts it into a pulse signal and inputs it to the engine control module, which then controls the engine speed and controls the fuel injection timing and ignition timing based on the input signal.
- Power to the crankshaft position sensor is supplied from the MFI relay and is grounded to the body. The crankshaft position sensor generates a pulse signal as it repeatedly connects and disconnects between 5 V voltage supplied from the engine control module and ground.

TROUBLESHOOTING HINTS

Hint 1: If unexpected shocks are felt during driving or the engine stalls suddenly during idling, shake the crankshaft position sensor harness. If this causes the engine to stall, poor contact of the sensor connector is suspected.

Hint 2: If the crankshaft position sensor outputs a pulse signal when the ignition switch is turned ON (with the engine not running), a faulty crankshaft position sensor or engine control module is suspected.

Hint 3: If the tachometer reads 0 rpm when the engine that has failed to start is cranked, faulty crankshaft position sensor or broken timing belt is suspected.

Hint 4: If the tachometer reads 0 rpm when the engine that has failed to start is cranked, the primary current of the ignition coil is not turned on and off. Therefore, troubles in the ignition circuit and ignition coil or faulty ignition power transistor is suspected.

Hint 5: If the engine can be run at idle even though the crankshaft position sensor reading is out of specification, troubles are often in other than the crankshaft position sensor.

[Examples]
(1) Faulty engine coolant temperature sensor
(2) Faulty idle air control motor
(3) Poorly adjusted reference idle speed

INSPECTION

Using Scan Tool

Function	Itern No.	Data display	Check condition	Check content	Normal state
Data reading	22	Cranking speed	• Engine cranking • Tachometer connected (check on and off of primary current of ignition coil by tachometer)	Compare cranking speed and scan tool reading	Indicated speed to agree

Function	Item No.	Data display	Check condition	Coolant temperature	Standard value
Data reading	22	Idle speed	• Engine: Running at idle • Closed throttle position switch: ON	At –20°C (-4°F)	1,275 – 1,475 rpm
				At 0°C (32°F)	1,225 – 1,425 rpm
				At 20°C (68°F)	1,100 – 1,300 rpm
				At 40°C (104°F)	950 – 1,150 rpm
				At 80°C (176°F)	600 – 800 rpm

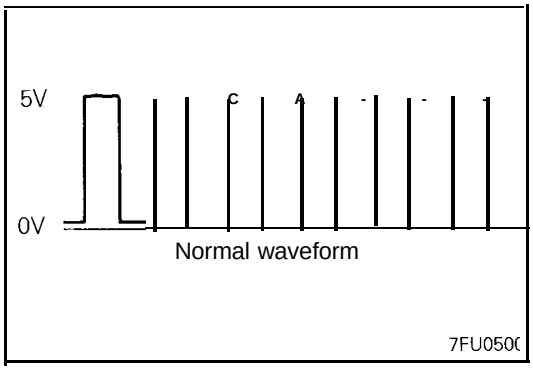

Normal waveform

Using Oscilloscope

(1) Run the engine at idle speed.
(2) Connect the probe to the oscilloscope pick-up point as shown in the circuit diagram, and check the waveform.

HARNESS INSPECTION

1

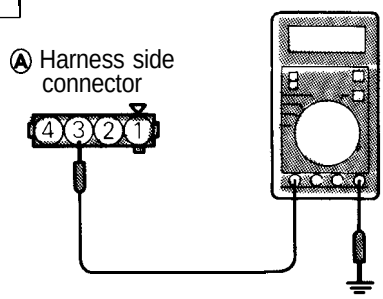

7FU0496

Measure the power supply voltage.

- Connector: Disconnected
- Ignition switch: ON

Voltage (V)
B+

OK → 2

NG → Repair the harness. (Ⓐ3 – MFI relay)

2

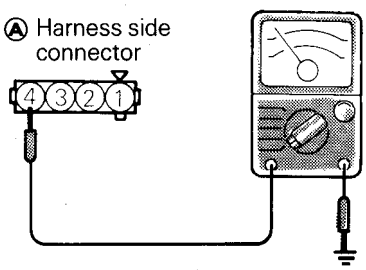

7FU0497

Check for continuity of the ground circuit.

- Connector: Disconnected

OK → 3

NG → Repair the harness. (Ⓐ4 – Ground)

3

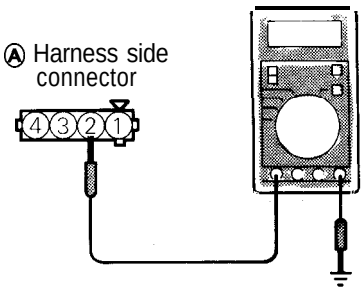

7FU0498

Check the voltage of the output circuit.

- Connector: Disconnected
- Ignition switch: ON

Voltage (V)
4.8 – 5.2

OK → STOP

NG → Repair the harness. (Ⓐ2 – 69)

CRANKSHAFT POSITION SENSOR <DOHC>

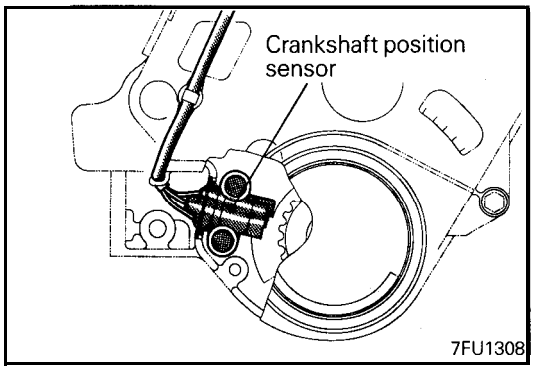

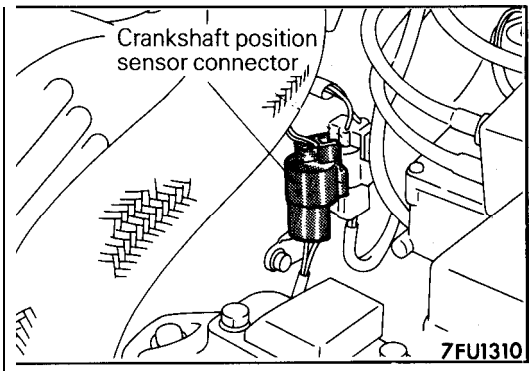

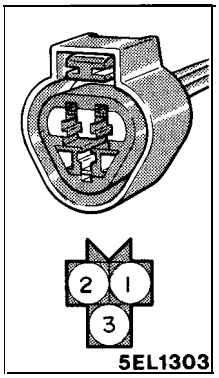

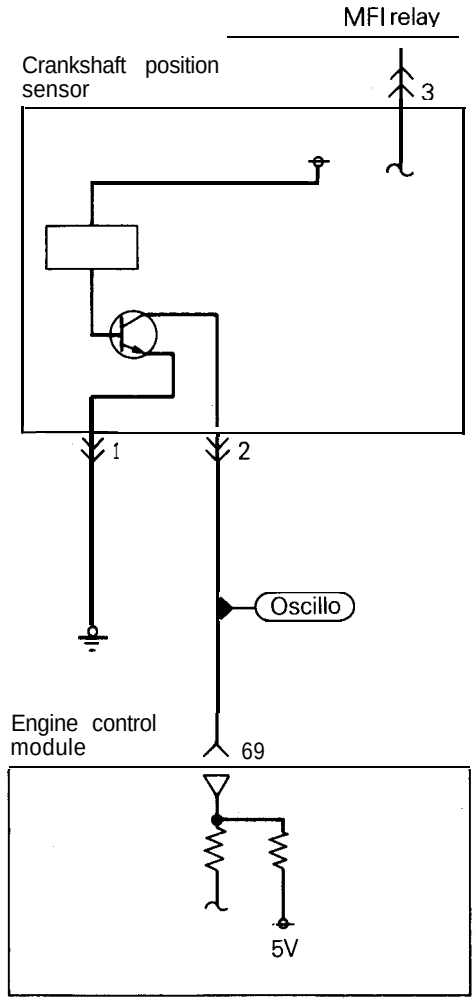

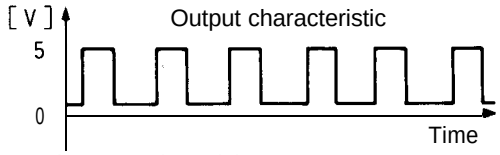

7FU0682

Engine control module connector

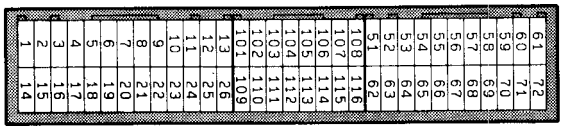

7FU0653

6AF0060

OPERATION

Refer to P.14A-104

TROUBLESHOOTING HINTS

Refer to P.14A-104

INSPECTION

Using Scan Tool

Function	Item No.	Data display	Check condition	Check content	Normal state
Data reading	22	Cranking speed	• Engine cranking • Tachometer connected	Compare cranking speed and scan tool reading	Indicated speed to agree

NOTE
(1) The tachometer indicates a third of the actual engine speed. Therefore, 3 times the tachometer indication is the actual engine speed.
(2) When the tachometer is set to the 2-cylinder range, it indicates actual engine speed.

Function	Item No.	Data display	Check condition	Coolant temperature	Standard value
Data reading	22	Idle speed	• Engine: Running at idle • Closed throttle position switch: ON	At –20°C (–4°F)	1,275 – 1,475 rpm
				At 0°C (32°F)	1,225 – 1,425 rpm
				At 20°C (68°F)	1,100 – 1,300 rpm
				(At 40°C (104°F)	950 – 1,150 rpm
				At 80°C (176°F)	(600 – 800 rpm

HARNESS INSPECTION

1

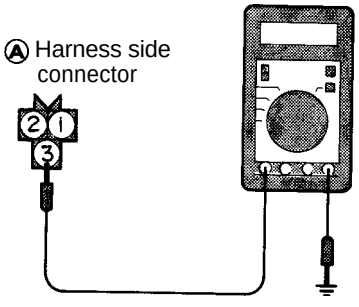

7FU1331

Measure the power supply voltage.
- Connector: Disconnected
- Ignition switch: ON

Voltage (V)
B+

OK → 2

NG → Repair the harness. (Ⓐ3 – MFI relay)

2

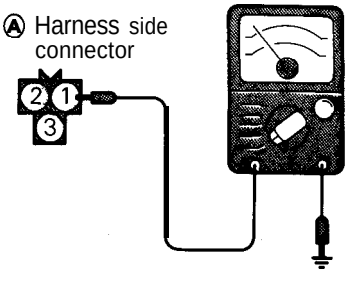

6AF0062

Check for continuity of the ground circuit.
- Connector: Disconnected

OK → 3

NG → Repair the harness. (Ⓐ1 – Ground)

3

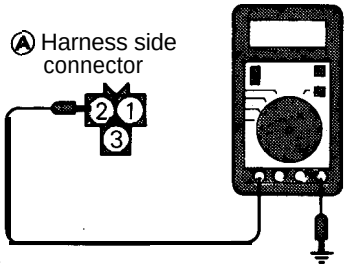

6AF0064

Measure the impressed voltage.
- Connector: Disconnected
- Ignition switch: ON

Voltage (V)
4.8 – 5.2

OK → STOP

NG → Repair the harness. (Ⓐ2 – 69)

IGNITION SWITCH-ST <M/T>

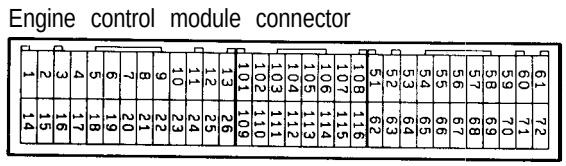

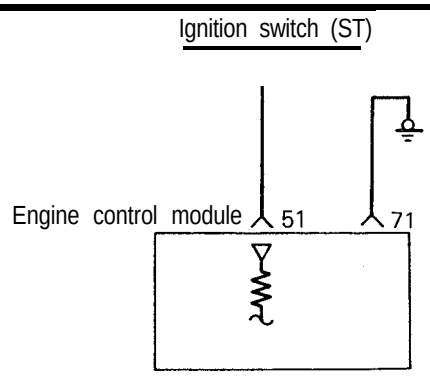

OPERATION

- The ignition switch-ST inputs a high signal to the engine control module while the engine is cranking. The engine control module provides fuel injection control, etc., at engine startup based on this signal.
- When the ignition switch is set to START, the battery voltage at cranking is applied through the ignition switch to the engine control module, which detects that the engine is cranking.

INSPECTION

Using Scan Tool

Function	Item No.	Data display	Check condition	Engine	indication
(Data reading	18	Switch state	Ignition switch: ON	Stop	
ON				Cranking	

HARNESS INSPECTION

1

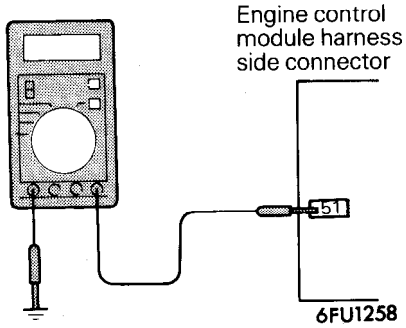

Measure the input voltage to the engine control module.

- Engine control module connector: Disconnected
- Ignition switch: START

Voltage (V)
8 or more

OK → 2

NG → Repair the harness. (51 – Ignition switch)

2

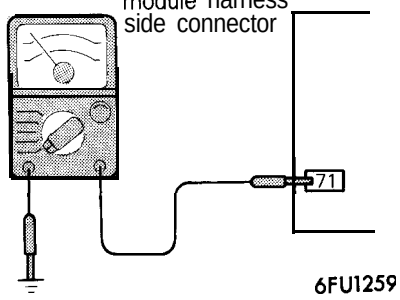

Check for continuity of the ground circuit.

- Engine control module connector: Disconnected

OK → STOP

NG → Repair the harness. *(m-Ground)

IGNITION SWITCH-ST AND PARK/NEUTRAL POSITION SWITCH (PNP SWITCH) <A/T>

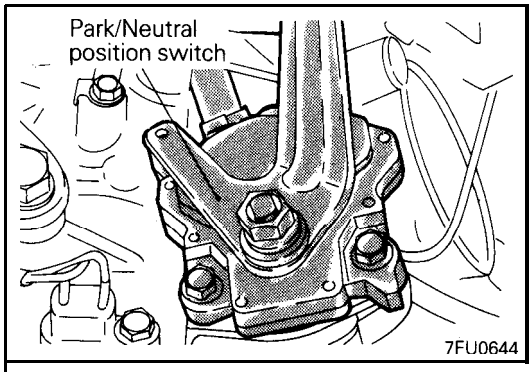

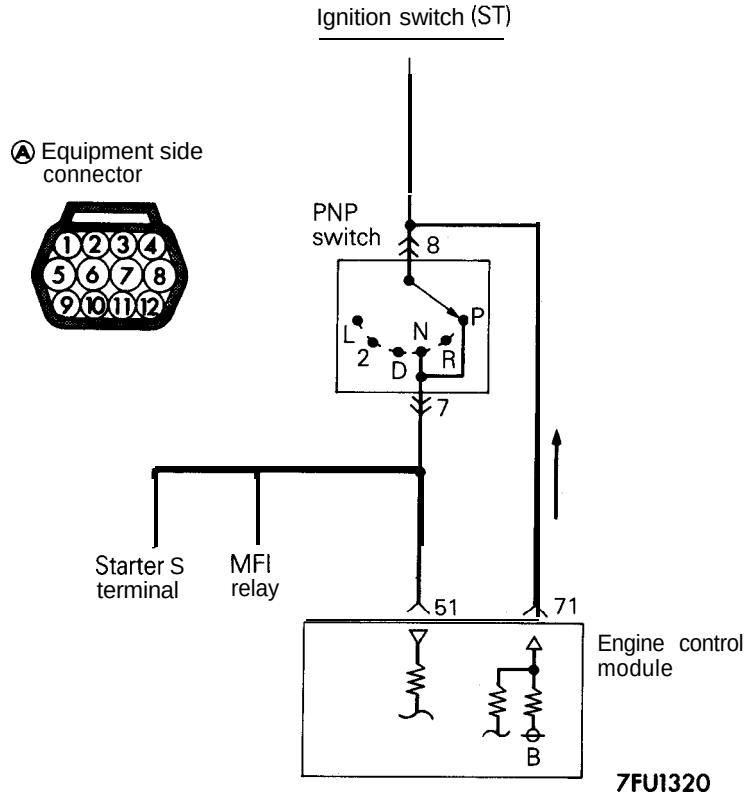

Engine control module connector

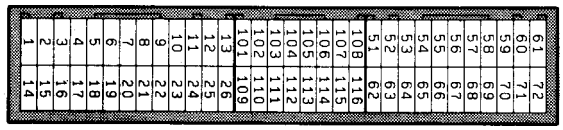

7FU0653

OPERATION

- The ignition switch-ST inputs a high signal to the engine control module while the engine is cranking. The engine control module provides fuel injection control, etc., at engine startup based on this signal.
- When the ignition switch is set to START, the battery voltage at cranking is applied through the ignition switch and park/neutral position switch to the engine control module, which detects that the engine is cranking.
  In case the selector lever is in a position other than the P/N range, the battery voltage is not applied to the engine control module.
- The park/neutral position switch converts the selector lever position (whether it is at the P/N range or at others) into high/low voltage and inputs it to the engine control module, which then controls the idle air control motor based on this signal.
- The battery voltage in the engine control module is applied through a resistor to the park/neutral position switch. When the selector lever is set to the P/N range, continuity is produced between the park/neutral position switch terminal of the engine control module and ground through the starter motor, thereby making the terminal voltage go low.

TROUBLESHOOTING HINTS

If the park/neutral position switch harness and individual part checked good but the park/neutral position switch output is abnormal, poorly adjusted control cable is suspected.

INSPECTION

Using Scan Tool

IGNITION SWITCH-ST

Normal condition	Item No.	Data display	Check condition	Engine
OFF	18	Switch state	Ignition switch: ON	Stop
ON				Cranking

PARK/NEUTRAL POSITION SWITCH

Function	Item No.	Data display	Check condition	Select lever position	Normal indication
Data reading	29	Shift position	Ignition switch: ON	P or N	P or N
				D,2,L or R	D,2,L or R

HARNESS INSPECTION

1

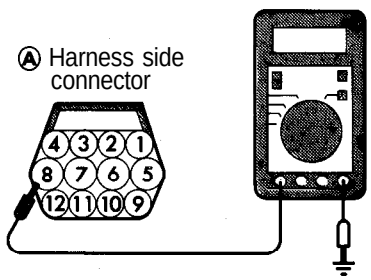

9FU0268

Measure the power supply voltage.

- Engine control module connector: Disconnected
- PNP switch connector: Disconnected
- Ignition switch: START

Voltage (V)
B+

OK → 2

NG → Check the power supply circuit.

2

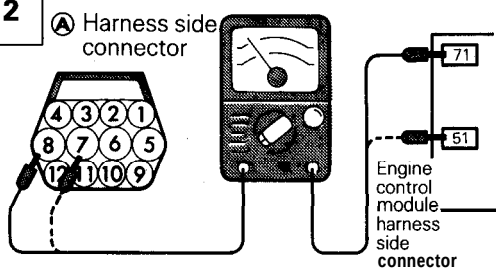

9FU0269

Check for continuity between the PNP switch and engine control module.

- Engine control module connector: Disconnected
- PNP switch connector: Disconnected

NOTE
Insert the probes of the circuit tester into both ends of the harness.

OK → 3

NG → Repair the harness. (Ⓐ 8 – 71) (Ⓐ 7 – 51)

3

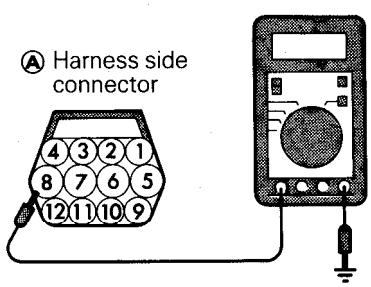

9FU0268

Measure the impressed voltage to the PNP switch.

- Engine control module connector: Connected
- PNP switch connector: Disconnected
- Ignition switch: ON

Voltage (V)
B+

OK → STOP

NG → Replace the engine control module.

VEHICLE SPEED SENSOR

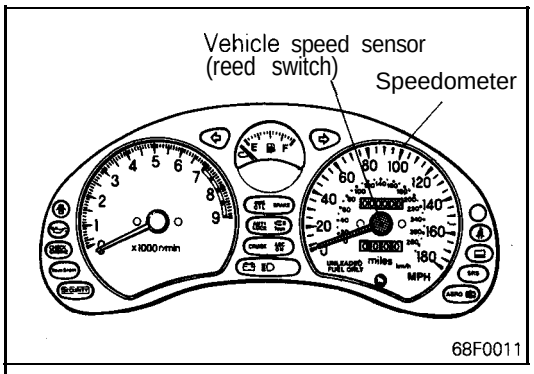

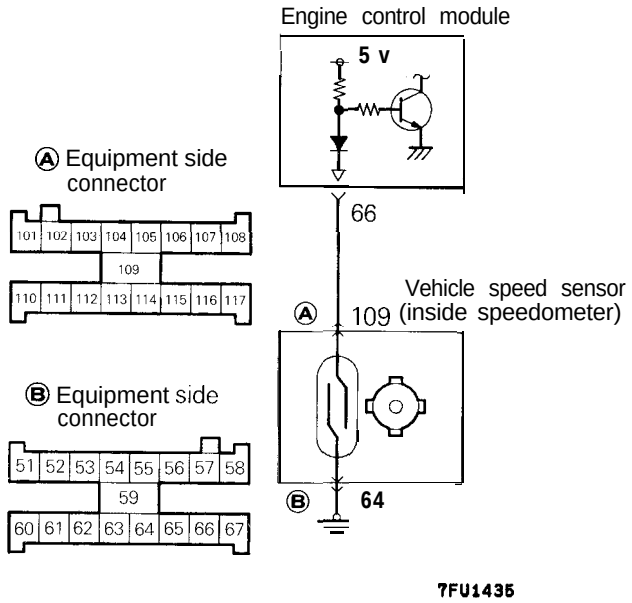

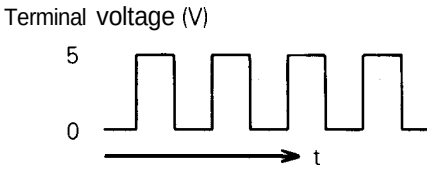

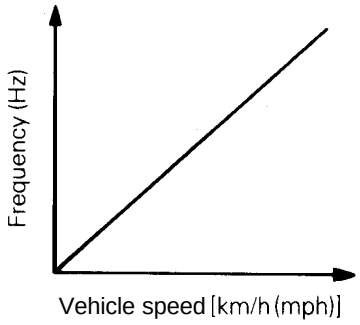

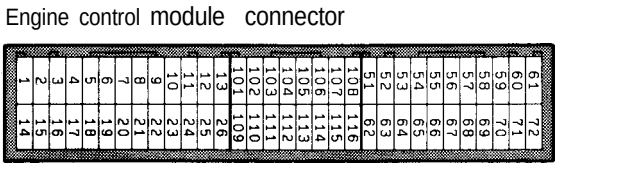

OPERATION

- The vehicle speed sensor which is located in the speedometer converts the vehicle speed into a pulse signal and inputs it to the engine control module, which then provides the idle speed control, etc. based on this signal.
- The vehicle speed sensor generates the vehicle speed signal by repeatedly opening and closing between the voltage of about 5 V applied from the engine control module and ground using a reed switch.

TROUBLESHOOTING HINTS

If there is an open or short circuit in the vehicle speed sensor signal circuit, the engine may stall when the vehicle is decelerated to stop.

HARNESS INSPECTION

1

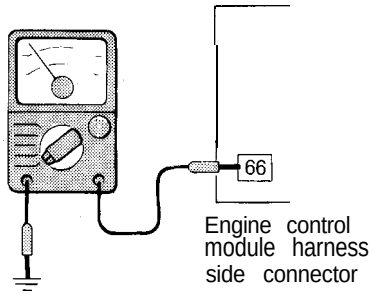

Check the vehicle speed sensor output circuit for continuity.

- Engine control module connector: Disconnected
- Move the vehicle.

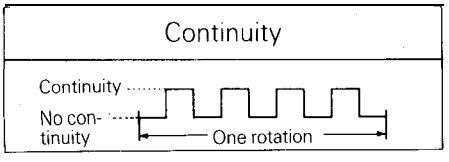

OK → STOP

OK → 2

2	Measure the power supply voltage of the vehicle speed sensor. • Connector: Disconnected • Ignition switch: ON Voltage (V): 4.5 – 4.9	OK →	3
		NG →	Repair the harness. (Ⓐ 109 – 66)
3	Check for continuity of the ground circuit. • Connector: Disconnected	OK →	STOP
		NG →	Repair the harness. (Ⓑ 64 – Ground)

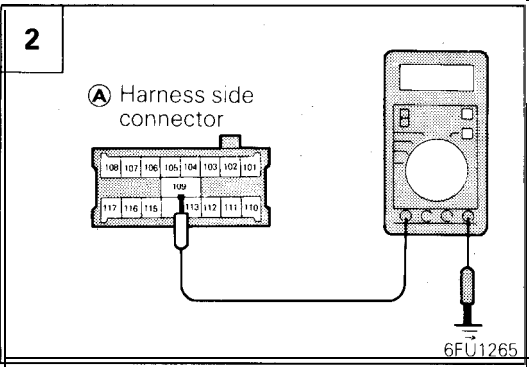

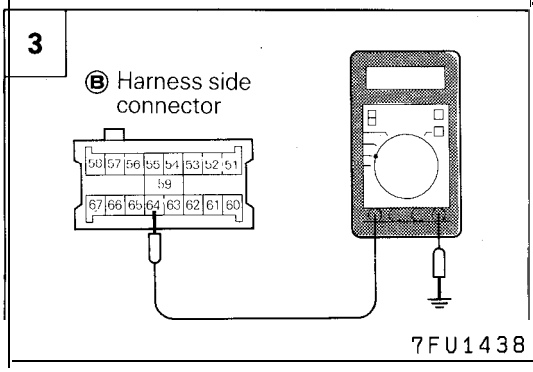

SENSOR INSPECTION

Refer to GROUP 8 – Meters and Gauges.

POWER STEERING PRESSURE SWITCH

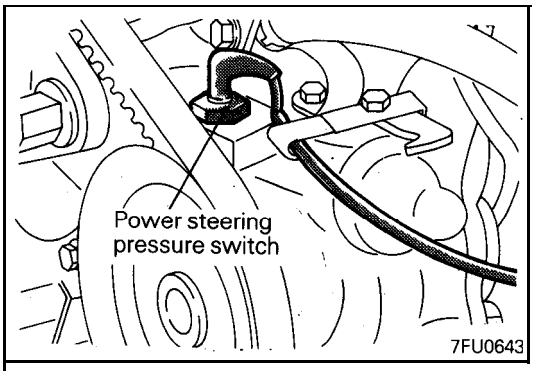

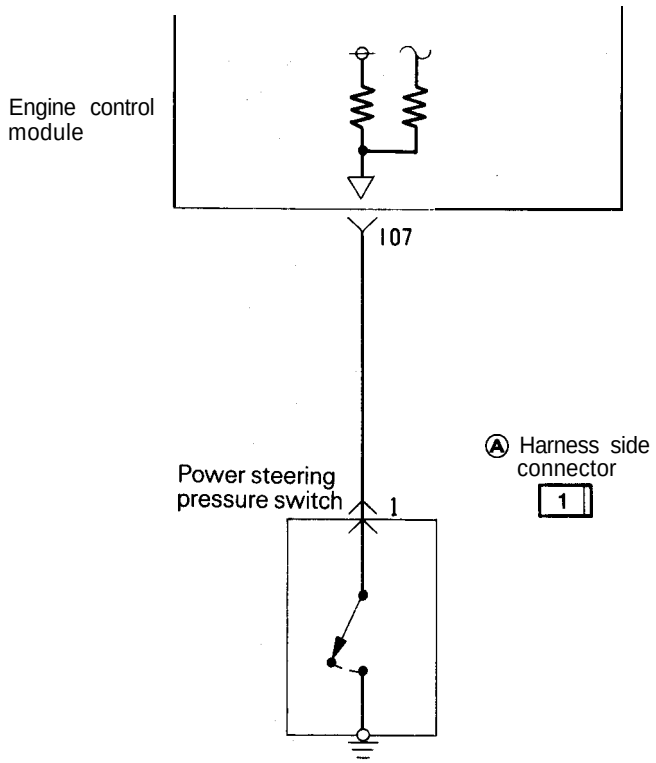

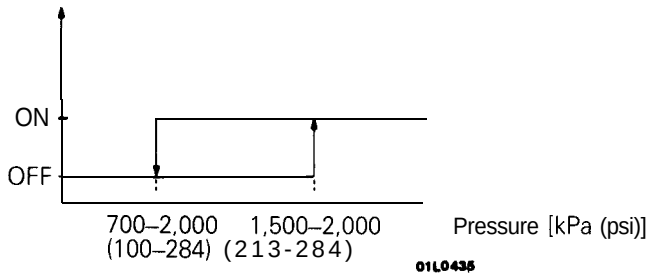

OPERATION

- The power steering pressure switch converts presence/absence of power steering load into low/high voltage and inputs it to the engine control module, which then controls the idle air control motor based on this signal.
- The battery voltage in the engine control module is applied through a resistor to the power steering pressure switch. Steering operation causes the power steering oil pressure to increase, turning the switch on. As a result, continuity is produced between the battery voltage applied and ground. This causes the power steering pressure terminal voltage to go from high to low.

INSPECTION

Using Scan Tool

Function	Item No.	Data display	Check condition	Steering wheel	Normal' indication
Data reading	27	Switch state	Engine: Idling	Steering wheel neutral position (wheels straight-ahead direction)	OFF
				Steering wheel half turn	ON

Checking Oil Pressure

Steering wheel	Oil pump delivery pressure (ref. value)
Straight forward	700 – 1,200 kPa (100 – 171 psi)
Turned	1,500 – 2,000 kPa (213 – 284 psi)

HARNESS INSPECTION

1

Ⓐ Harness side connector

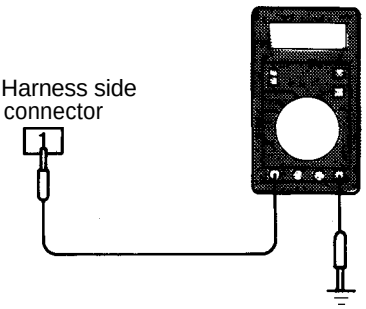

7FU0505

Measure the power supply voltage.

- Connector: Disconnected
- Ignition switch: ON

Voltage (V)
B+

OK → STOP

NG → Repair the harness. (Ⓐ1 – 107)

SENSOR INSPECTION

Refer to GROUP 19 – Service Adjustment Procedures.

AIR CONDITIONING SWITCH AND COMPRESSER CLUTCH RELAY

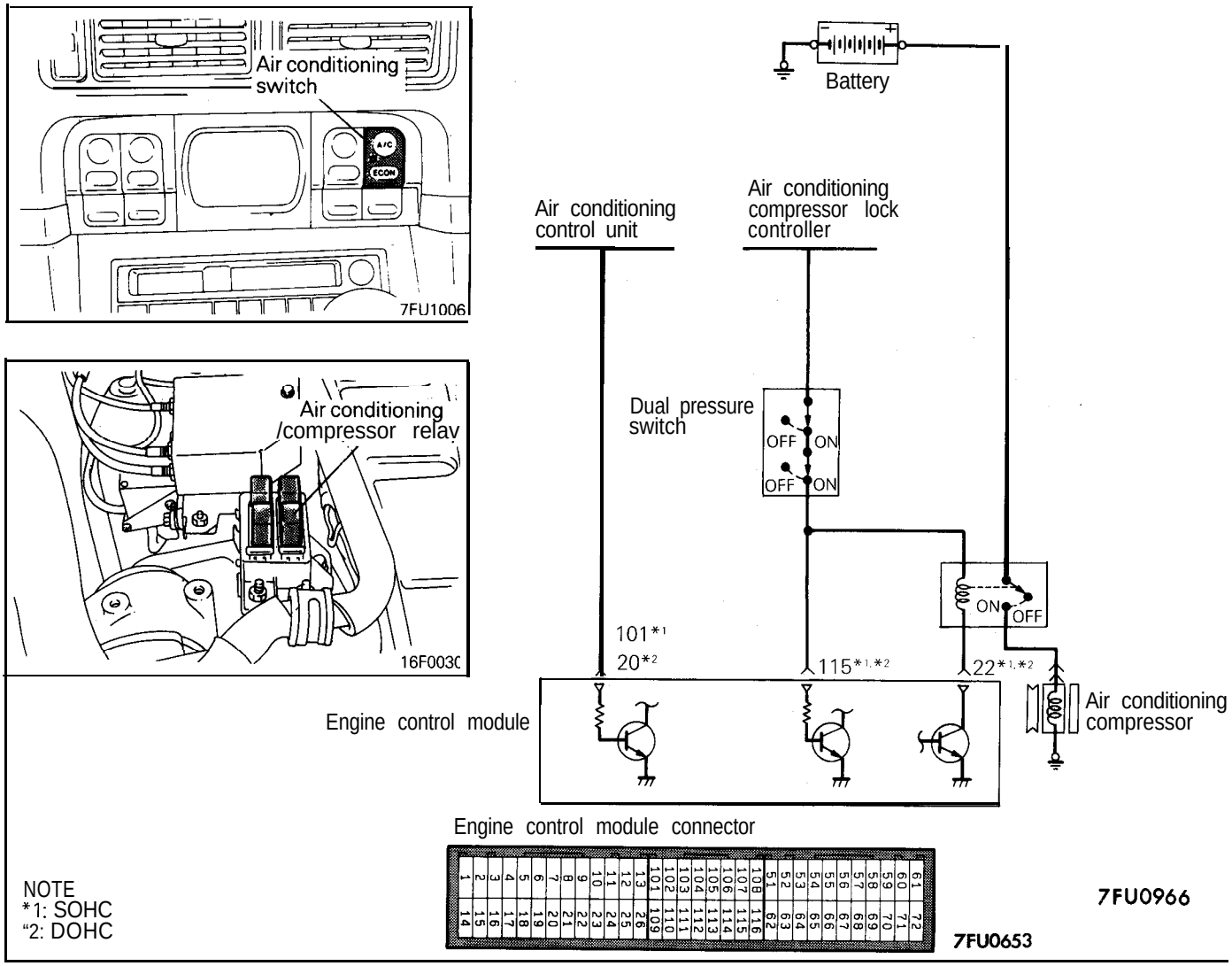

NOTE
*1: SOHC
*2: DOHC

OPERATION

- The air conditioning switch applies the battery voltage to the engine control module when the air conditioning is turned on.
- When the air conditioning ON signal is input, the engine control module drives the idle air control motor and turns ON the power transistor. As a result, the air conditioning power relay coil is energized to turn on the relay switch, which activates the air compressor magnetic clutch.

TROUBLESHOOTING HINTS

If the air compressor magnet clutch is not activated when the air conditioning switch is turned on during idling, faulty air conditioning control system is suspected.

INSPECTION

Using Scan Tool

AIR CONDITIONING SWITCH

Function	Item No.	Data display	Check condition	Air conditioning switch	Normal indication
Data reading	28	Switch state	Engine: Idling (air compressor to be running when air conditioning switch is ON)	OFF	OFF
				ON	ON

AIR CONDITIONING POWER RELAY

Function	Item No.	Data display	Check condition	Air conditioning switch	Normal indication
Data reading	49	Air conditioning relay state	Eingine: Idling after warm-up	OFF	OFF (compressor clutch non-activation)
				ON	ON (compressor clutch activation)

HARNESS INSPECTION

1

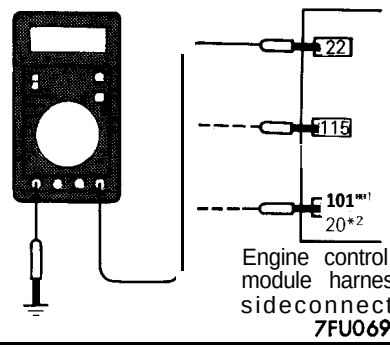

Measure the power supply voltage of the air conditioning circuit.

- Air conditioning switch: ON
- Engine control module connector: Disconnected
- Ignition switch: ON
- Dual air conditioning switch: ON

Voltage (V)
B+

OK → STOP

OK → Check the air conditioning circuit.

AIR CONDITIONING INSPECTION

Refer to GROUP 24 – Service Adjustment Procedures.

KNOCK SENSOR <DOHC>

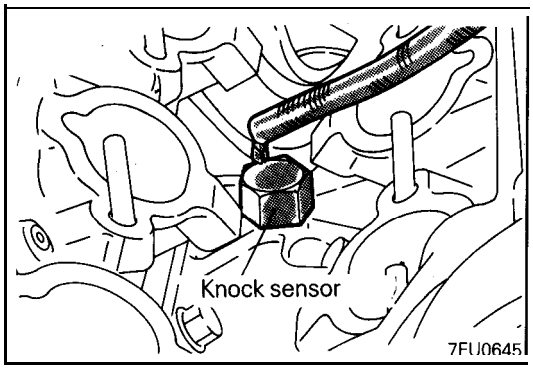

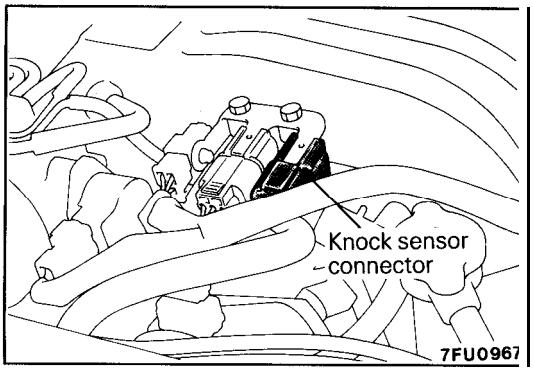

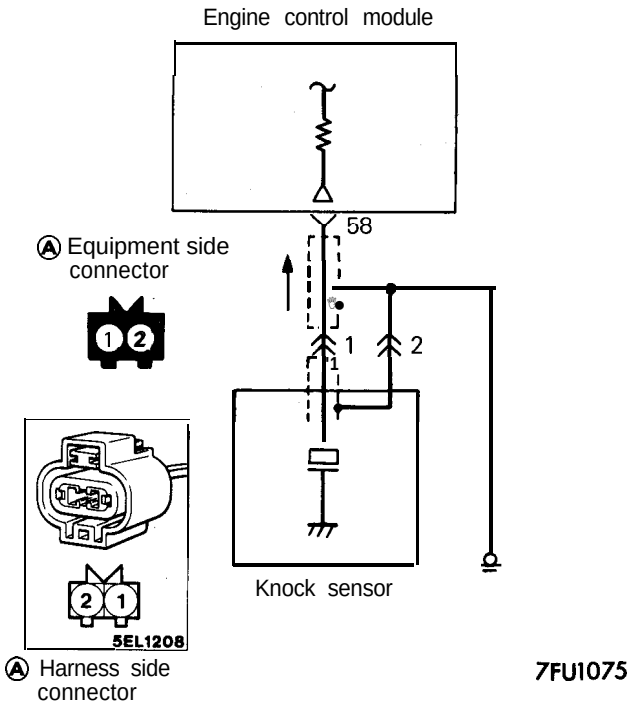

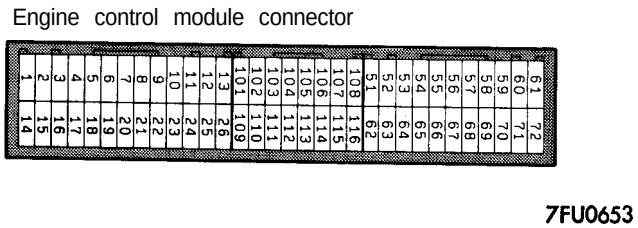

OPERATION

The knock sensor generates a voltage proportional to the magnitude of cylinder block vibration due to knocking and inputs it to the engine control module. Based on this signal, the engine control module provides retard control of the ignition timing.

TROUBLESHOOTING HINTS

When knocking occurs while driving under high-load conditions, the following problems are suspected in addition to the knock sensor itself.

(1) Inappropriate ignition plug heat range
(2) Inappropriate gasoline
(3) Incorrectly adjusted reference ignition timing

HARNESS INSPECTION

1 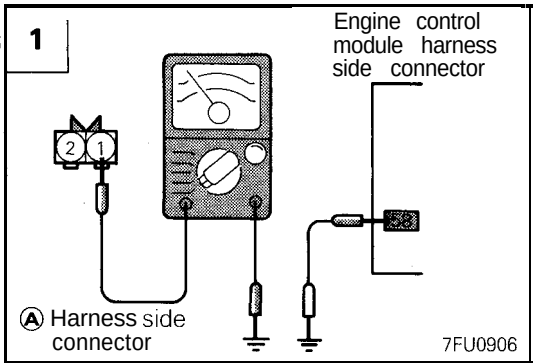	Check for an open-circuit or a short-circuit to ground, between the engine control module and knock sensor. • Knock sensor connector: Disconnected • Engine control module connector: Disconnected	OK → 2 NG → Repair the harness. (Ⓐ1 – 58)
2 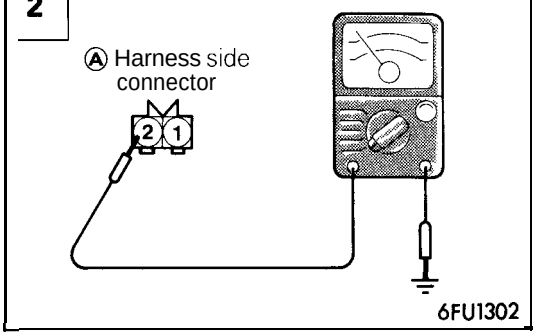	Check for continuity of the ground circuit. • Connector: Disconnected	OK → STOP NG → Repair the harness. (Ⓐ2 – Ground)

ELECTRICAL LOAD SWITCH <DOHC>

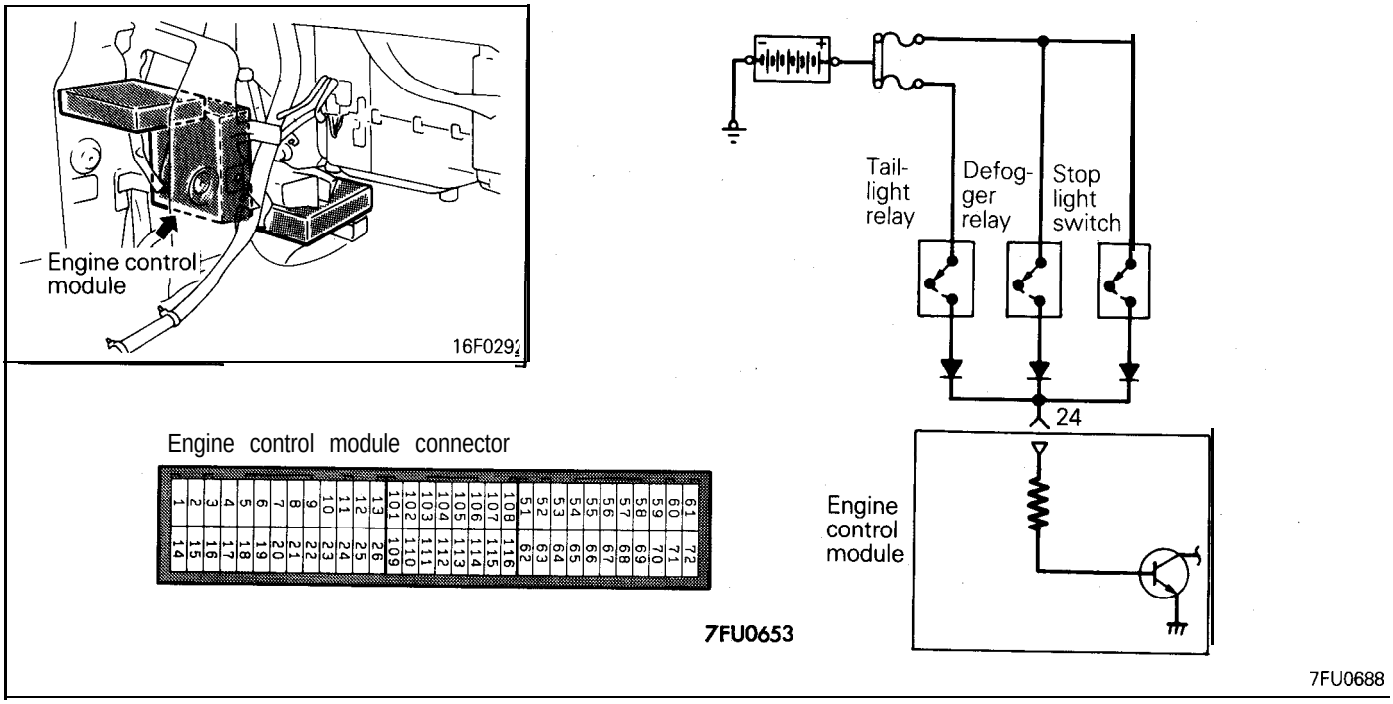

OPERATION

- The electrical load switch inputs ON/OFF state of the switch of equipment that consumes much power during idling, namely, equipment with a large electrical load, to the engine control module. Based on this signal, the engine control module controls the idle air control motor.
- When the switch of equipment with a large electrical load is turned ON, the battery voltage is applied to the engine control module to indicate that the equipment switch is turned ON.

INSPECTION

Using Scan Tool

Function	Item No.	Data display	Check condition	Equipment state	Normal display
Data reading	33	Switch state	Operation of equipment: OFF	Lighting switch only: OFF → ON	OFF → ON
				Rear defogger switch only: OFF → ON	OFF → ON
				Brake pedal only: depressed → Released	ON → OFF

HARNESS INSPECTION

1	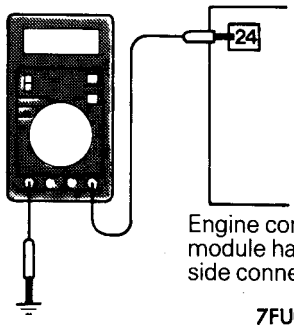	Measure the input voltage of engine control module. • Engine control module connector: Disconnected • Lighting switch: ON (Tail light relay ON) Voltage (V): B+	OK → 2 NG → Check circuit related to tail light relay
2	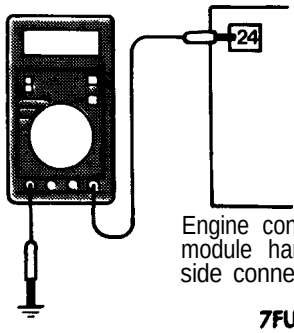	Measure the input voltage of engine control module. • Engine control module connector: Disconnected • Defogger switch: ON (Defogger relay ON) Voltage (V): B+	OK → 3 NG → Check circuit related to defogger relay
3	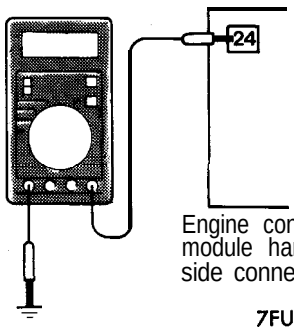	Measure the input voltage of engine control module. • Engine control module connector: Disconnected • Brake pedal: Depressed (Stop light switch ON) Voltage (V): B+	OK → STOP NG → Check circuit related to stop light relay

FAN MOTOR RELAY (RADIATOR, AIR CONDITIONING CONDENSER)

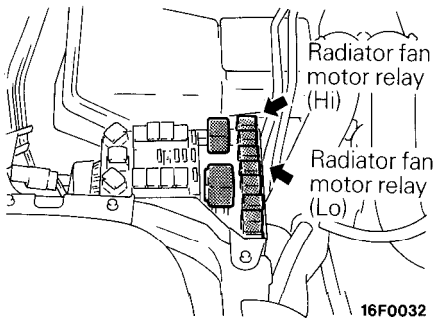

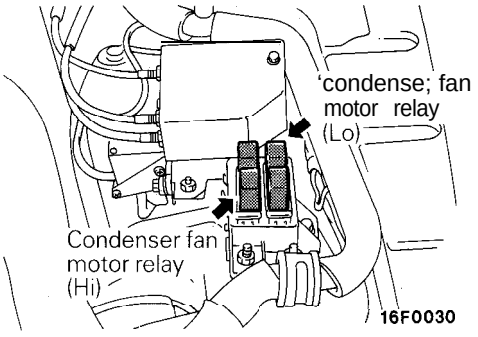

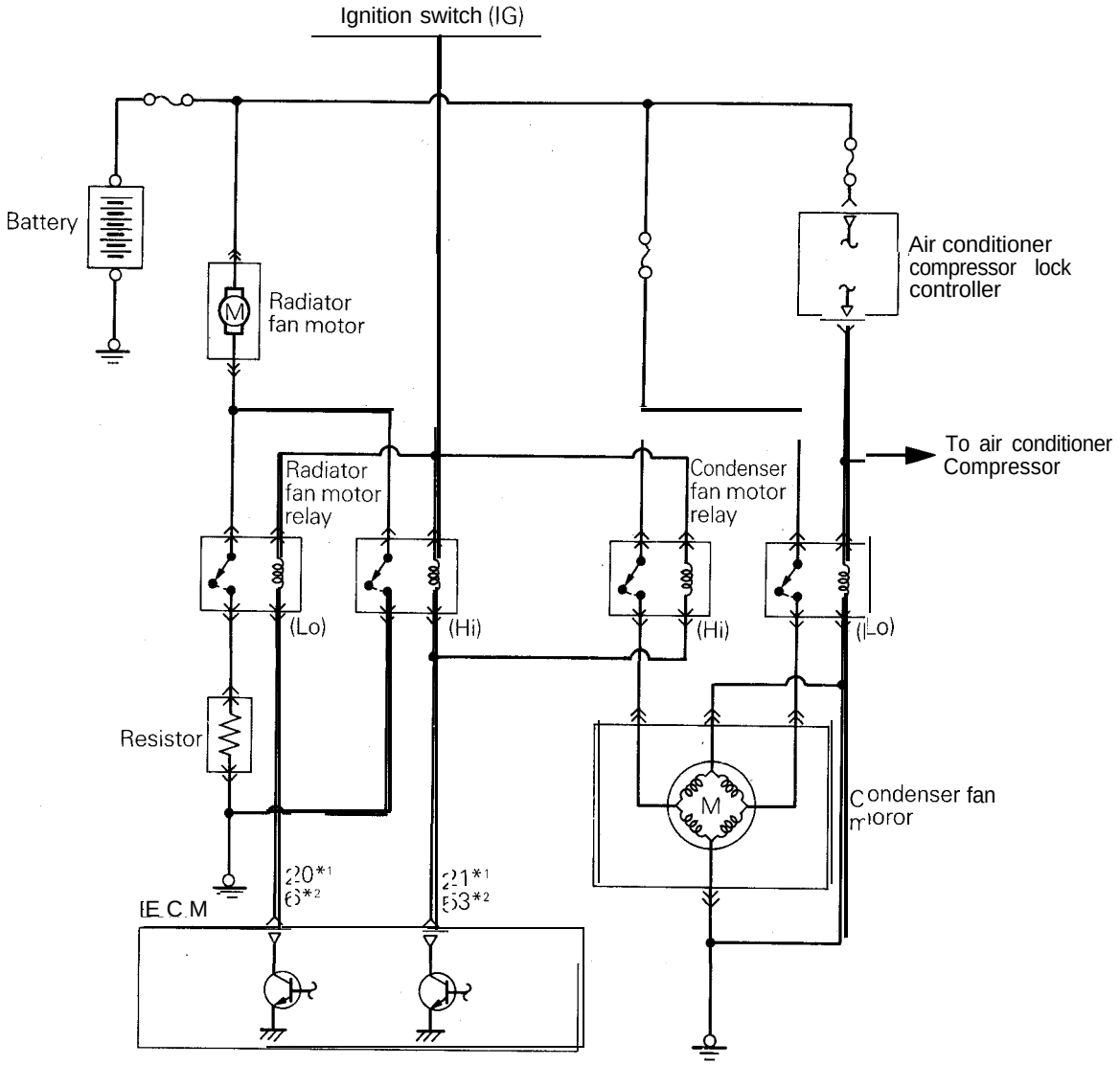

NOTE
*1: SOHC
*2: DOHC

Engine control module connector

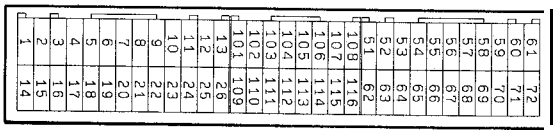

7FU0653

OPERATION

- The engine control module controls the radiator fan motor and condenser fan motor according to the engine coolant temperature and vehicle speed via the power transistors (low speed side and high speed side) in the module.
- If the engine control unit turns ON the low speed side power transistor inside the module, the radiator fan motor relay (Lo) coil operates to send driving power supply (for low speed rotation) from the battery to the radiator fan motor.
  If the air conditioner compressor lock controller outputs the air conditioner compressor driving power supply, the current flows to the condenser fan motor relay (Lo).
  The condenser fan motor relay (Lo) will operate to send driving power supply (for low speed rotation) from the battery to the condenser fan motor.
  If the engine control module turns ON the high speed side power transistor inside the unit, the radiator fan motor relay (Hi) and condenser fan motor relay (Hi) will operate to send the driving power supply (for high speed rotation) to the radiator fan motor and condenser fan motor.

INSPECTION

Using Scan Tool

Function	Item No.	Drive content	Check condition	Normal state
Actuator test	20	Radiator fan motor and condenser fan motor are driven at high speeds.	Ignition switch: ON	Radiator fan motor and condenser fan motor rotate at high speeds.
	21	Radiator fan motor and condenser fan motor are driven at low speeds.	Ignition switch: ON	Radiator fan motor and condenser fan motor rotate at low speeds.

HARNESS INSPECTION

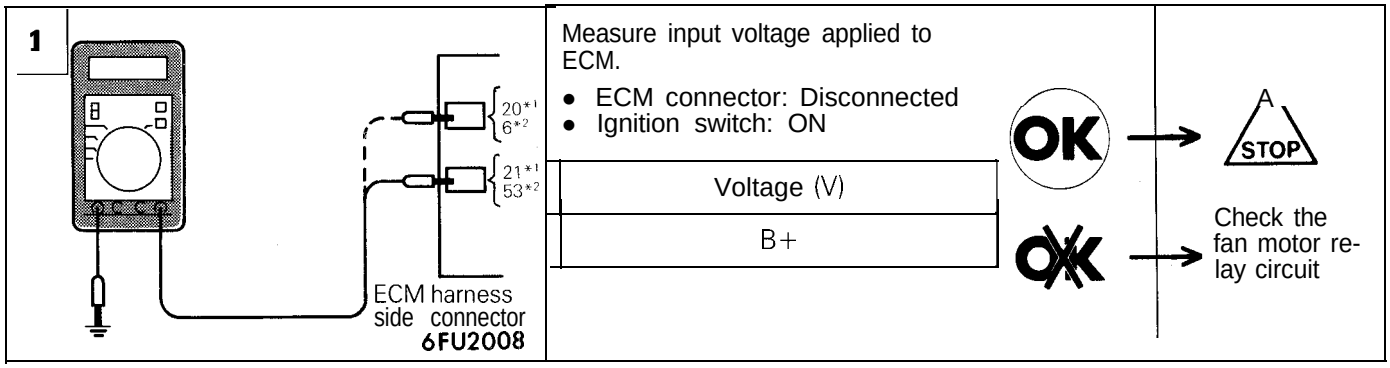

FAN MOTOR RELAY INSPECTION

Refer to Radiator Check in GROUP 7 and Power Relay Check in GROUP 24.

INDUCTION CONTROL VALVE POSITION SENSOR <DOHC>

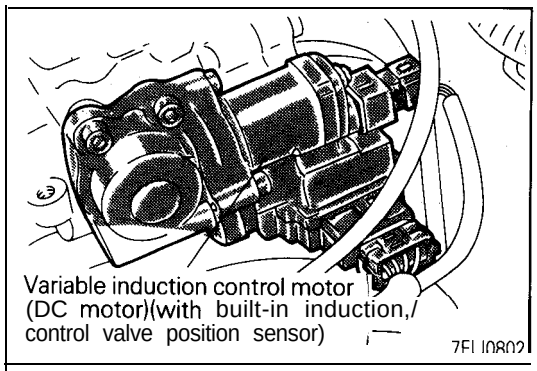

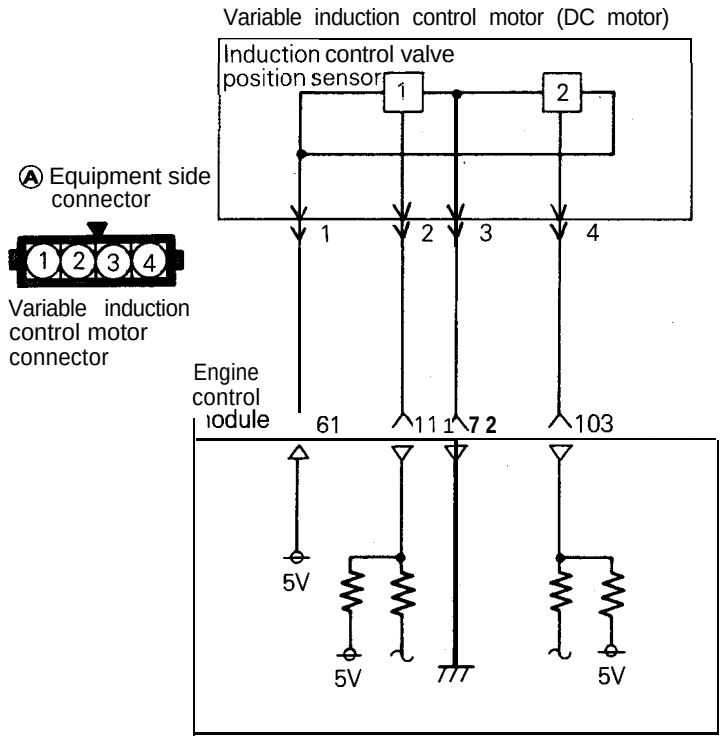

OPERATION

- The induction control valve position sensor detects the induction control valve opening degree and converts it into a pulse signal to be input into the engine control module, which provides valve opening and closing control based on this signal.
- The induction control valve position sensor is supplied with 5 V power from the engine control module and is grounded to the engine control module. A voltage of 5 V from the engine control module is impressed to the two output terminals of the induction control valve position sensor. By opening and closing the circuit between the output terminal and ground, the induction control valve position sensor generates the pulse signal.

HARNESS INSPECTION

1 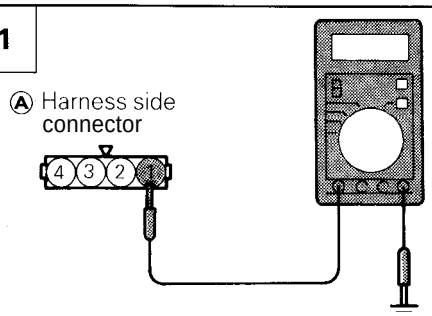 6FU1241	Measure the power supply voltage of the air intake control valve position sensor. • Connector: Disconnected • Ignition switch: ON Voltage (V): 4.8 – 5.2	OK →	2
		NG →	Repair the harness. (Ⓐ 1 – 61)
2 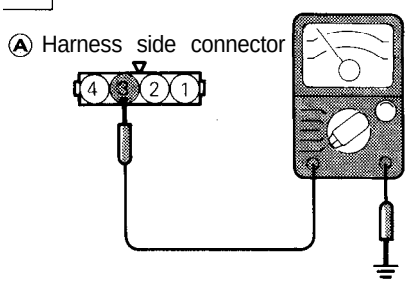 7FU0824	Check for continuity of the ground circuit. • Connector: Disconnected	OK →	3
		NG →	Repair the harness. (Ⓐ 3 – 72)
3 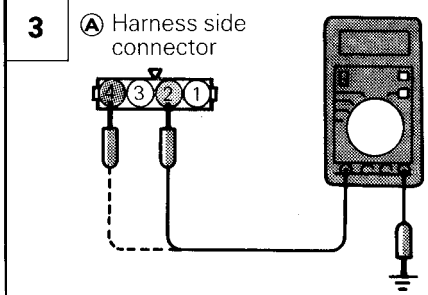 7FU0825	Measure the terminal voltage. • Connector: Disconnected • Ignition switch: ON	OK →	STOP
		NG →	Repair the harness. (Ⓐ 2 – 111) (Ⓐ 4 – 103)

EGR TEMPERATURE SENSOR <California>

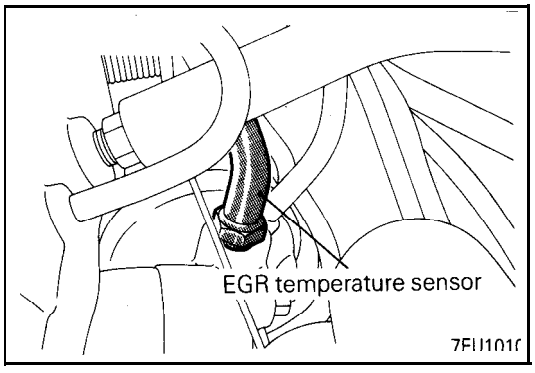

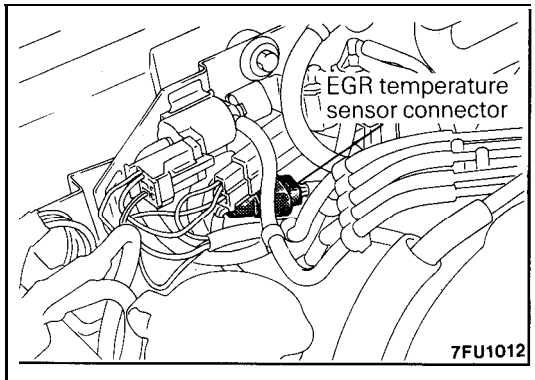

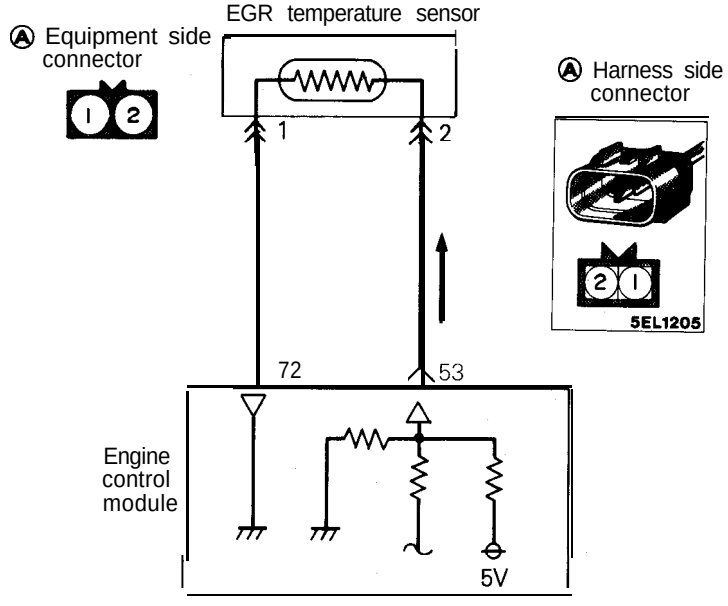

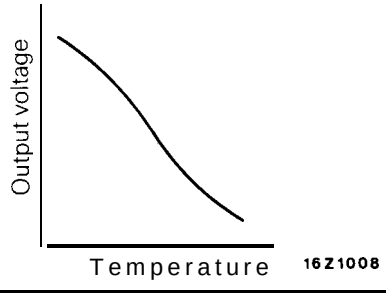

OPERATION

- The EGR temperature sensor converts the temperature of EGR gas downstream from the EGR valve to voltage and inputs it to the engine control module. The engine control module judges the condition of the EGR by this signal. If there is abnormal condition, the check engine/malfunction indicator lamp is turned on to notify the driver.
- Five volt power supply in the engine control module is applied to the EGR temperature sensor through the resistance in the module. This power supply further passes through the EGR temperature sensor, which is a kind of resistor, and is grounded at the engine control module. The resistance of the EGR temperature sensor is characterized by a decrease in resistance with an increase of EGR temperature due to increase in quantity of EGR.
- EGR temperature sensor terminal voltage increases or decreases with EGR temperature sensor resistance. Therefore, EGR temperature sensor terminal voltage changes with EGR gas temperature. The higher the EGR gas temperature, the lower the EGR temperature sensor terminal voltage.

INSPECTION

Using Scan Tool

Function	Item No.	Data display	Check condition	Engine state	Standard value
Data reading	43	Sensor temperature	Engine: Warmed up Engine is maintained in a constant state for 2 minutes or more Disconnect vacuum hose (green stripe) from EGR solenoid and install blind caps to removed vacuum hose end and solenoid nipple.	700 rpm (Idle)	100°C (212°F) or less
				3,500 rpm	120°C (248°F) or more

HARNESS INSPECTION

1

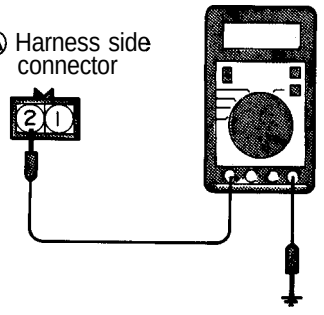

7FU1259

Measure the power supply voltage.
- Connector: Disconnected
- Ignition switch: ON

Voltage (V)
4.3 – 4.7

OK → 2

NG → Repair the harness. (Ⓐ2 – 53)

2

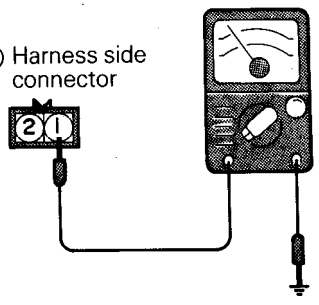

7FU1257

Check for continuity of the ground circuit.
- Connector: Disconnected

OK → STOP

NG → Repair the harness. (Ⓐ1 – 72)

SENSOR INSPECTION

Refer to GROUP 25 – Exhaust Gas Recirculation (EGR) System.

HEATED OXYGEN SENSOR <Except California – SOHC>

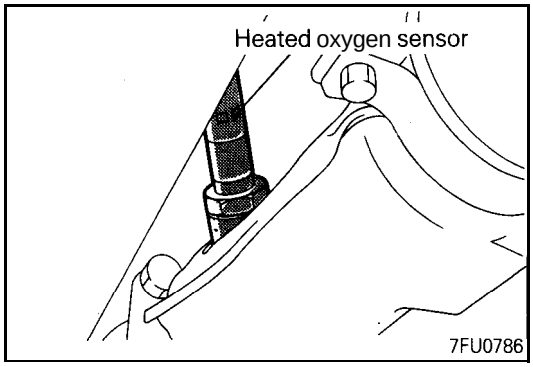

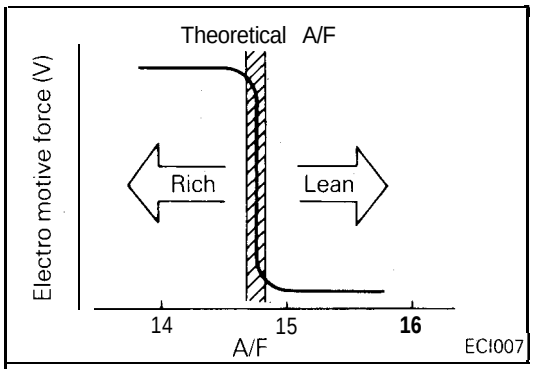

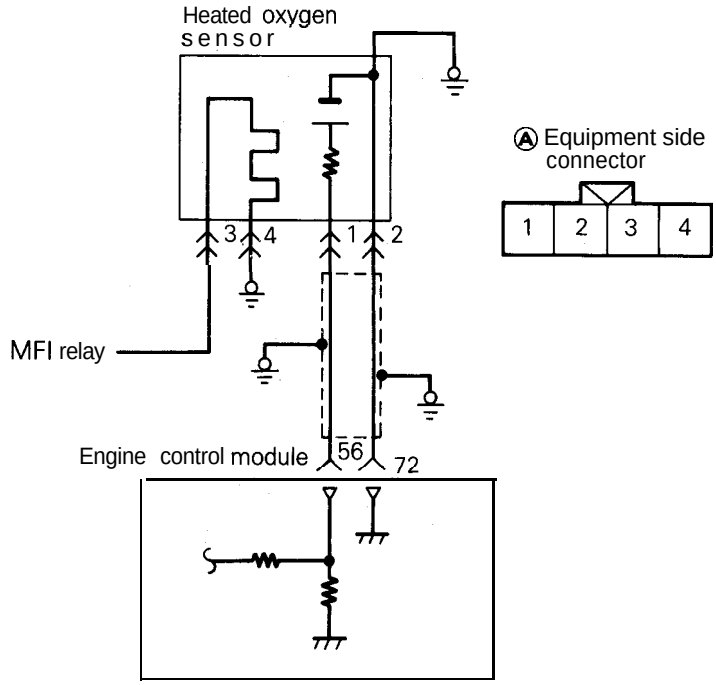

7FU0969

Engine control module connector

1	2	3	4	5	6	7	8	9	10	11	12	13	101	102	103	104	105	106	107	108	51	52	53
14	15	16	17	18	19	20	21	22	23	24	25	26	109	110	111	112	113	114	115	116	62	63	64

54	55	56	57	58	59	60	61	65	66	67	68
69	70	71	72								

7FU0653

OPERATION

- The heated oxygen sensor senses the oxygen concentration in exhaust gas, converts it into a voltage and inputs it to the engine control module.
- The heated oxygen sensor outputs about 1 V when the air-fuel ratio is richer than the theoretical ratio and outputs about 0 V when the ratio is leaner (higher oxygen concentration in exhaust gas).
- The engine control module controls the fuel injection ratio based on this signal so that the air-fuel ratio may be kept at the theoretical ratio.
- The battery voltage is supplied to the heated oxygen sensor through the MFI relay. Therefore, the sensor element is heated by the heater so that the heated oxygen sensor remains responsive even when the exhaust temperature is low.

TROUBLESHOOTING HINTS

Hint 1: Poor cleaning of exhaust gas will result if the heated oxygen sensor fails.

Hint 2: If the heated oxygen sensor checked good but the sensor output voltage is out of specification, troubles of parts related to air-fuel ratio control system are suspected.

[Examples]
(1) Faulty injector
(2) Air leaking into the intake manifold through gasket gap, etc.
(3) Faulty volume air flow sensor, intake air temperature sensor, barometric pressure sensor, engine coolant temperature sensor

INSPECTION

Using Scan Tool

Function	Item No.	Data display	Check condition	Engine state	Standard value
Data reading	11	Sensor voltage	Engine: Warm-up (make the mixture lean by engine speed reduction, and rich by racing)	When sudden deceleration from 4,000 rpm	200 mV or lower
				When engine is suddenly raced	600 – 1,000 mV
			Engine: Warm-up (using the heated oxygen sensor signal, check the air/fuel mixture ratio, and also check the condition of control by the engine control module)	700 rpm (Idle)	400 mV or lower ↕ (changes) 600 – 1,000 mV
				2,000 rpm	

HARNESS INSPECTION

1

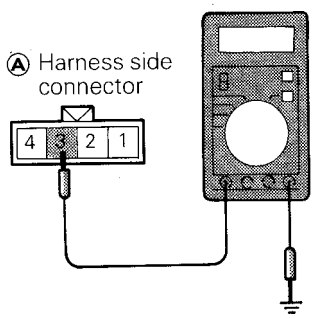

7FU0827

Measure the power supply voltage of the heated oxygen sensor.

- Connector: Disconnected
- Ignition switch: ON

Voltage (V)
B+

OK → 2

NG → Repair the harness. (Ⓐ3 – MFI relay)

2

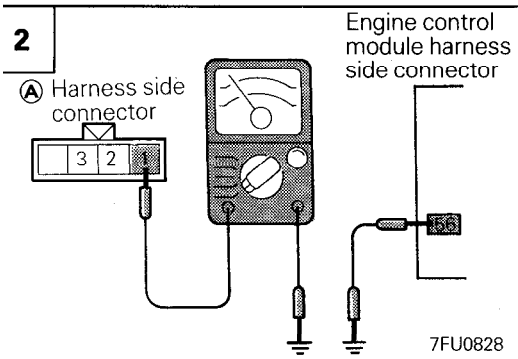

7FU0828

Check for an open-circuit, or a short-circuit to ground between the engine control module and the heated oxygen sensor.

- Heated oxygen sensor connector: Disconnected
- Engine control module connector: Disconnected

OK → 3

NG → Repair the harness. (Ⓐ1 – 56)

3

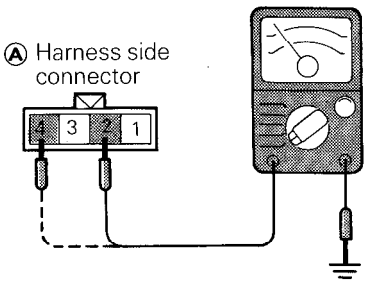

7FU0829

Check for continuity of the ground circuit.

- Connector: Disconnected

OK → STOP

NG → Repair the harness. (Ⓐ2 – 72) (Ⓐ4 – Ground)

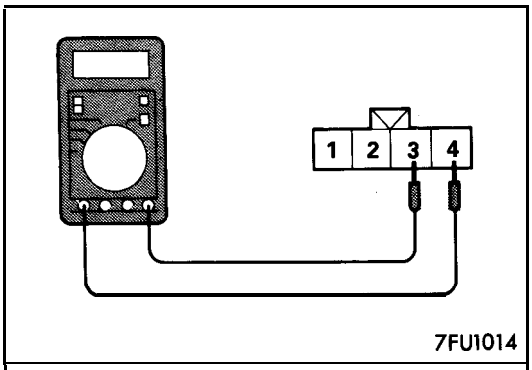

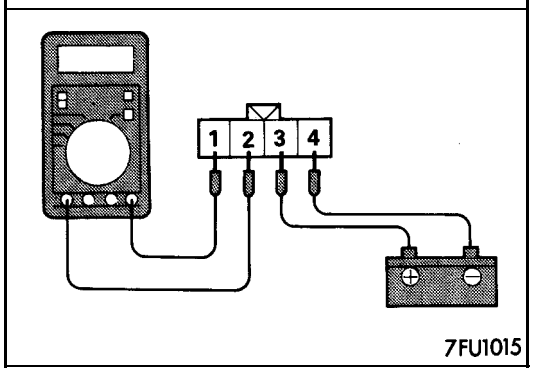

SENSOR INSPECTION

(1) Disconnect the heated oxygen sensor connector.
(2) Check that there is continuity [approx. 20 Ω at 20°C (68°F)] across terminals ③ and ④ of the heated oxygen sensor connector.
(3) If there is no continuity, replace the heated oxygen sensor.

(4) Warm up the engine until the engine coolant temperature becomes 80°C (176°F) or higher.
(5) Using jumper wires, connect terminals ③ and ④ of the heated oxygen sensor connector to battery ⊕ and ⊖ terminals respectively.

Caution
Ensure that the jumper wires are connected correctly, as wrong connections result in a broken heated oxygen sensor.

(6) Connect a digital voltmeter across terminals ① and ②.

(7) Racing the engine repeatedly and measure the output voltage of the heated oxygen sensor.

Engine	Heated oxygen sensor output voltage	Remarks
When engine is raced	0.6 – 1.0 V	When the air-fuel mixture becomes richer as a result of repeated racing, the heated oxygen sensor should output a voltage of 0.6 – 1.0 V.

NOTE
For removal and installation of the heated oxygen sensor, refer to GROUP 11 – Exhaust Manifold.

HEATED OXYGEN SENSOR <California – SOHC>

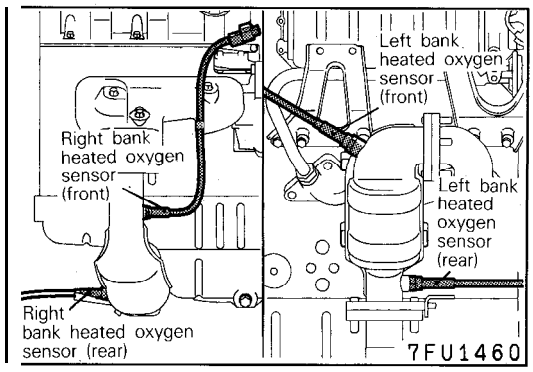

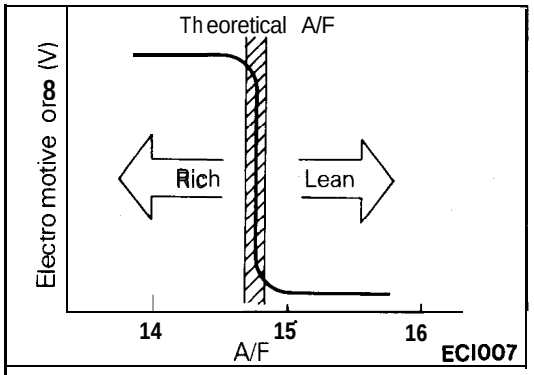

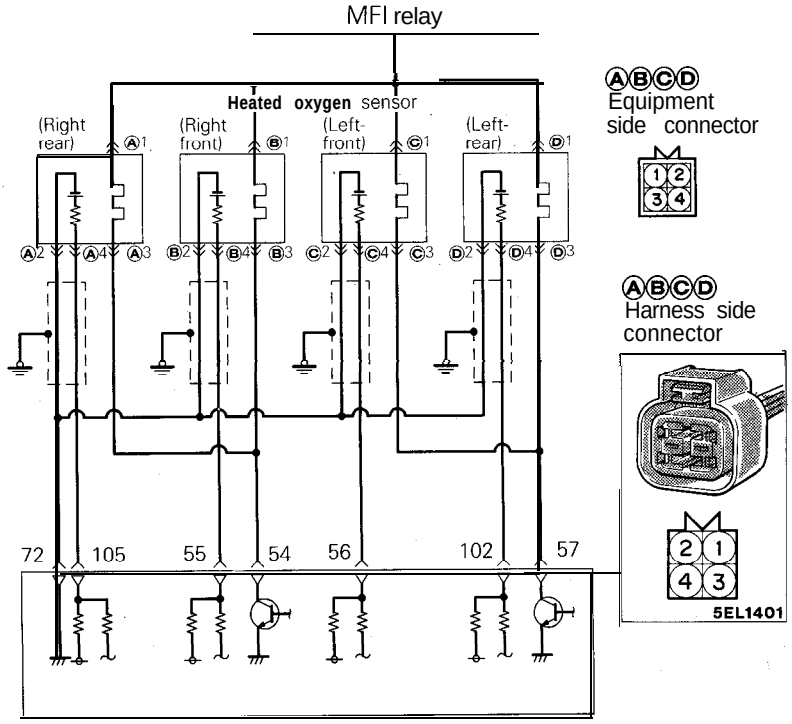

Engine control module connector

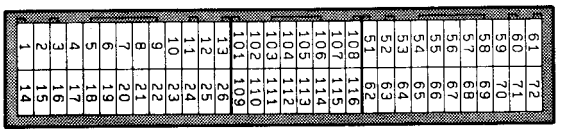

OPERATION

Refer to P.14A-128.

TROUBLESHOOTING

Refer to P.14A-129.

INSPECTION

Using Scan Tool

<Heated oxygen sensor (front)>

Function	tern No.	Data display	Check condition	Engine condition	Standard value
Data reading	11 39	Sensor detection voltage	Engine: Warm-up (Make the mixture lean by engine speed reduction, and rich by racing)	When sudden deceleration from 4,000 rpm	200 mV or lower
				When engine is suddenly raced	600 – 1,000 mV
			Engine: Warm-up (Using the heated oxygen sensor signal, check the air/fuel mixture ratio, and also check the condition of control by the engine control module)	700 rpm (Idling)	400 mV or lower ↕ (Changes) 600 – 1,000 mV
				2,000 rpm	

<Heated oxygen sensor (rear)>

Function	Item No.	Data display	Check condition	Engine condition	Standard value
Data reading	59 69	Sensor voltage	• Transaxle: 2nd gear <M/T>, L range <A/T> • Drive with wide open throttle	3,500 rpm	600 – 1,000 mV

<Heated oxygen sensor (front, rear:)>

Function	Item No.	Data display	Check condition	Engine condition	Normal indication
Data reading	48	Heater condition	Engine: Warm-up	750 rpm (Idle)	ON
				5,000 rpm	OFF

HARNESS INSPECTION

1

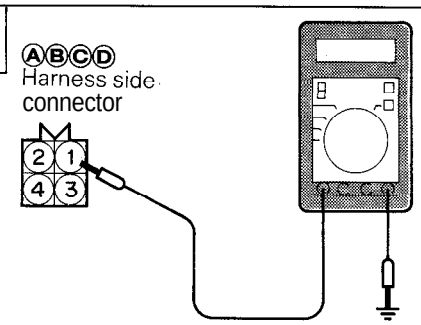

Measure the power supply voltage of the heated oxygen sensor.

- Connector: Disconnected
- Ignition switch: ON

Voltage (V)
B+

OK → 2

NG → Repair the harness. (A1, B1, C1, D1 – MFI relay)

2

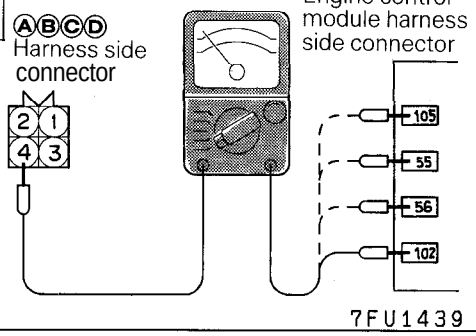

Check for an open-circuit, or a short-circuit to ground, between the engine control module and the heated oxygen sensor.

- Heated oxygen sensor connector: Disconnected
- Engine control module connector: Disconnected

OK → 3

NG → Repair the harness. (A4 – 105) (B4 – 55) (C4 – 56) (D4 – 102)

3

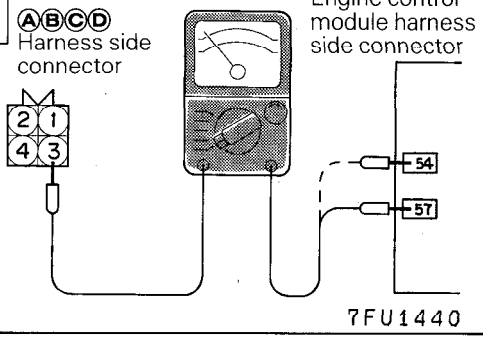

Check for an open-circuit, or a short-circuit to ground, between the engine control module and the heated oxygen sensor.

- Heated oxygen sensor connector: Disconnected
- Engine control module connector: Disconnected

OK → 4

NG → Repair the harness. (A3, B3 – 54) (C3, D3 – 57)

4

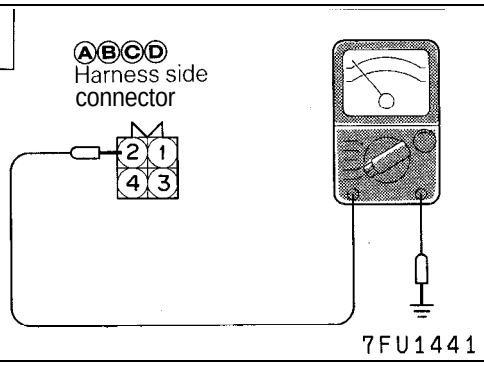

Check for continuity of the ground circuit.

- Connector: Disconnected

OK → STOP

NG → Repair the harness. (A2, B2, C2, D2 – [illegible])

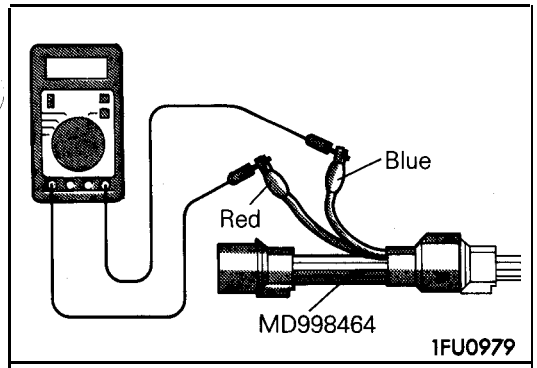

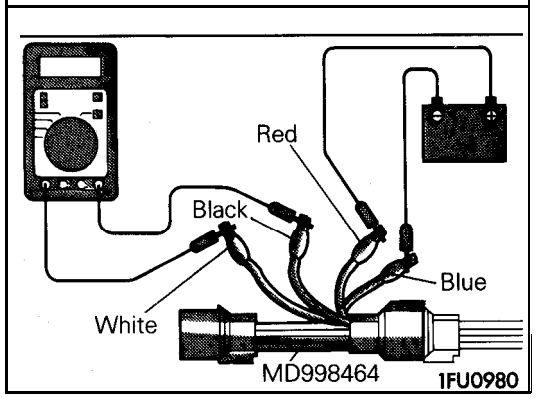

SENSOR INSPECTION

(1) Disconnect the heated oxygen sensor connector and connect the special tool, Test Harness, to the heated oxygen sensor connector.
(2) Check that there is continuity [approx. 20 Ω at 20°C (68°F)] across terminals ① and ③ of the heated oxygen sensor connector.
(3) If there is no continuity, replace the heated oxygen sensor.

(4) Warm up the engine until the engine coolant temperature becomes 80°C (176°F) or higher.
(5) Using jumper wires, connect terminals ① (red clip of the special tool) and ③ (blue clip) of the heated oxygen sensor connector to battery ⊕ and ⊖ terminals respectively.

Caution
Ensure that the jumper wires are connected correctly, as wrong connections result in a broken heated oxygen sensor.

(6) Connect a digital voltmeter across terminals ② (black clip of the special tool) and ④ (white clip).
(7) Race the engine repeatedly and measure the output voltage of the heated oxygen sensor.

Engine	Heated oxygen sensor output voltage	Remarks
When engine is raced	0.6 – 1.0 V	When the air-fuel mixture becomes richer as a result of repeated racing, the heated oxygen sensor shoul output a voltage of 0.6 – 1.0 V.

(8) If the measurements are not as specified, defective heated oxygen sensor is suspected.

INSTALLATION

(1) For removal and installation of heated oxygen sensor, refer to GROUP 11 – Exhaust Manifold.
(2) Tighten the heated oxygen sensor to specified torque.

INJECTORS

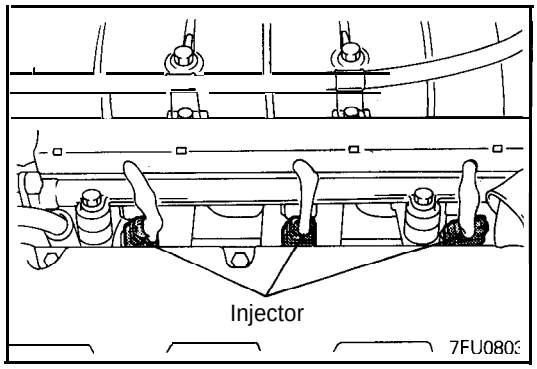

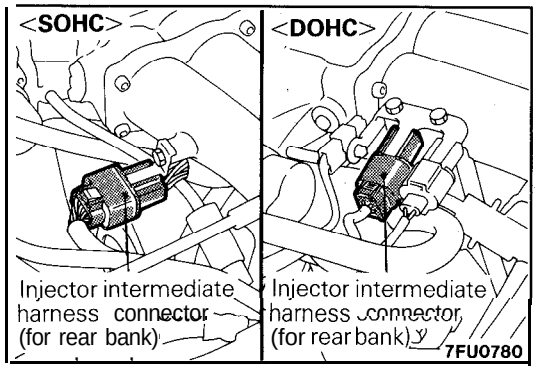

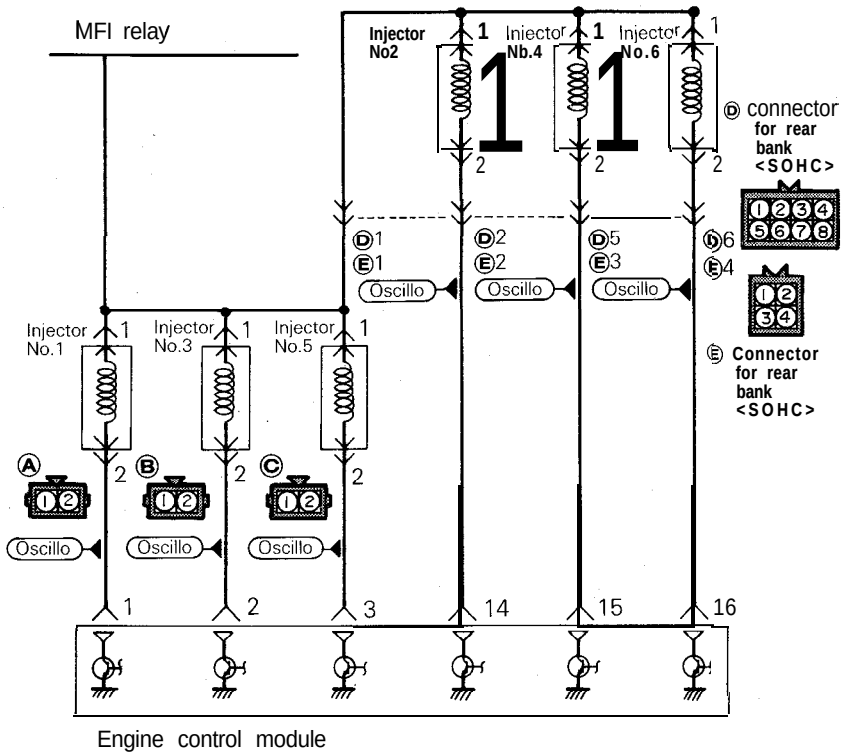

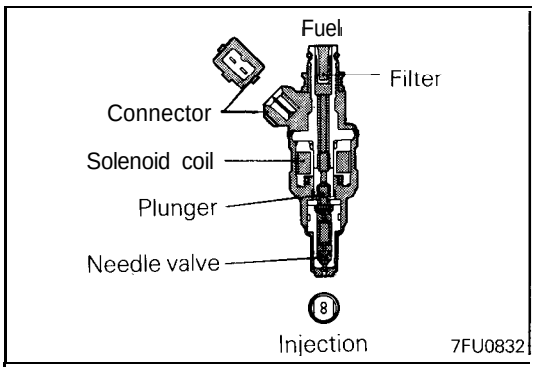

Engine control module connector

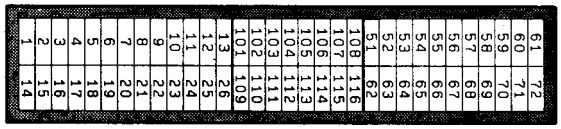

OPERATION

- The injector is an injection nozzle with a solenoid valve which injects fuel according to the injection signal coming from the engine control module.
- The injector has a fixed nozzle opening area and the fuel pressure against manifold inside pressure is regulated to a fixed level. Therefore, the volume of fuel injected by the injector is determined by the time during which the needle valve is open, namely, by the time during which the solenoid coil is energized.
- The battery voltage is applied through the MFI relay to this injector. When the engine control module turns on the power transistor in the module, the solenoid coil is energized to open the injector valve, which then injects fuel.

TROUBLESHOOTING HINTS

Hint 1 : If the engine is hard to start when hot, check fuel pressure and check the injector for leaks.

Hint 2: If the injector does not operate when the engine that is hard to start is cranked, the following as well as the injector itself may be responsible.
(1) Faulty power supply circuit to the engine control unit, faulty ground circuit
(2) Faulty MFI relay
(3) Faulty crankshaft position sensor, camshaft position sensor

Hint 3: If there is any cylinder whose idle state remains unchanged when the fuel injection of injectors is cut one after another during idling, make following checks about such cylinder.
(1) Injector and harness check
(2) Ignition plug and high tension cable check
(3) Compression pressure check

Hint 4: If the injector harness and individual part checked good but the injector drive time is out of specification, the following troubles are suspected.
(1) Poor combustion in the cylinder (faulty ignition plug, ignition coil, compression pressure, etc.)
(2) Loose EGR valve seating
(3) High engine resistance

INSPECTION

Using Scan Tool

Function	Item No.	Data display	Check condition	Coolant temperature	Standard value
Data reading	41	Drive time*'	Engine: Cranking	0°C (32°F)*2	13.8 – 16.8 ms
				20°C (68°F)	40 – 48.8 ms
				80°C (176°F)	8.6 – 10.6 ms

Function	Item No.	Data display	Check condition	Engine state	Standard value
Data reading	41	Drive time*3	• Engine coolant temperature: 80 to 95°C (176 to 205°F) • Lights, electric cooling fan, accessory units: All OFF • Transaxle: Neutral (P range for vehicle with A/T) • Steering wheel: Neutral	700 rpm (Idle)	2.3 – 3.5 ms
				2,000 rpm	2.1 – 3.3 ms <SOHC> 2.0 – 3.2 ms <DOHC>
				When sharp racing is made	To increase

NOTE
*1: The injector drive time refers to when the supply voltage is 11 V and the cranking speed is less than 250 rpm.
"2: When coolant temperature is lower than 0°C (32°F), injection is made by 6 cylinders simultaneously.
"3: When the vehicle is new [within initial operation of about 500 km (300 miles)], the injector drive time may be about 10% longer.

Function	Item No.	Drive content	Check condition	Normal state
Actuator test	01	No. 1 injector shut off	Engine: Idling after warm-up (Shut off the injectors in sequence during idling after engine warm-up, check the idling condition)	Idle state to change further (becoming less stable or stalling)
	02	No. 2 injector shut off		
	03	No. 3 injector shut off		
	04	No. 4 injector shut off		
	05	No. 5 injector shut off		
	06	No. 6 injector shut off		

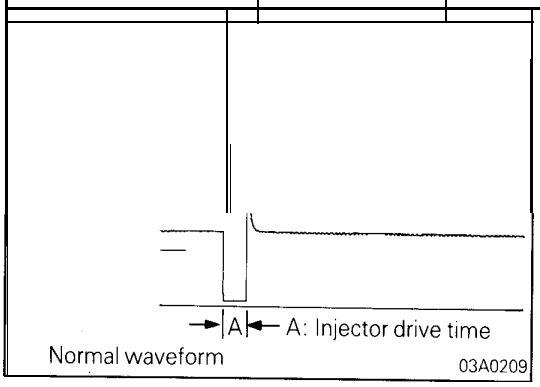

Using Oscilloscope

(1) Run the engine at idle speed.
(2) Connect the probe to the oscilloscope pick-up point as shown in the circuit diagram, and check the waveform at the drive side of each injector.

HARNESS INSPECTION

1

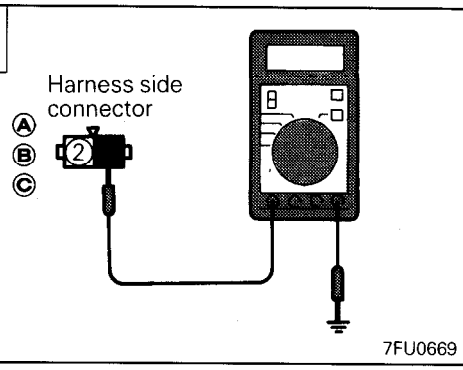

Measure the power supply voltage of the front bank injector.
- Connector: Disconnected
- Ignition switch: ON

Voltage (V)
B+

OK → 2

NG → Repair the harness. (ABC 1 – MFI relay)

2

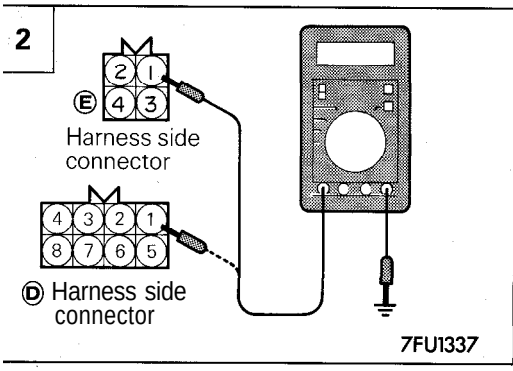

Measure the power supply voltage of the rear bank injector.
- Connector: Disconnected
- Ignition switch: ON

Voltage (V)
B+

OK → 3

NG → Repair the harness. (D 1 – MFI relay) (E 1 – MFI relay)

3

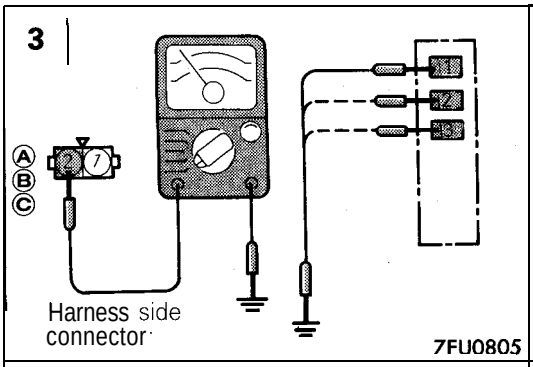

Check for an open-circuit, or a short-circuit between the front bank injector and the engine control module.

- Injector connector: Disconnected
- Engine control module connector: Disconnected

OK → 4

NG → Repair the harness. (ABC 2 – 1 2 3)

4

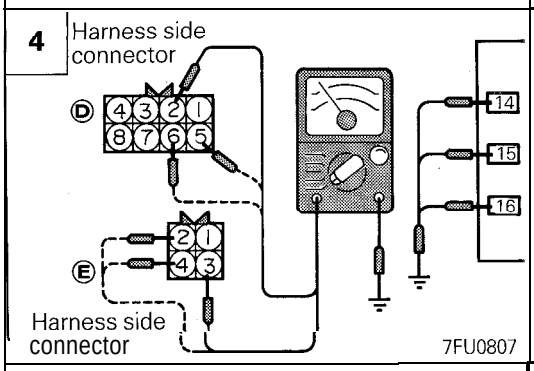

Check for an open-circuit, or a short-circuit between the rear bank injector and the engine control module.

- Connector: Disconnected
- Engine control module connector: Disconnected

OK → STOP

NG → Repair the harness. (D 2 5 6 – 14 15 16) (E 2 3 4 – 14 15 16)

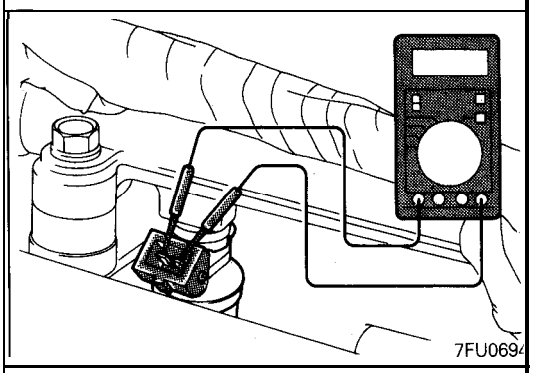

ACTUATOR INSPECTION

Measurement of Resistance between Front Bank Terminals

(1) Disconnect the injector connector.

(2) Measure the resistance between terminals.

Standard value: 13 – 16 Ω [at 20°C (68°F)]

(3) Install the injector connector.

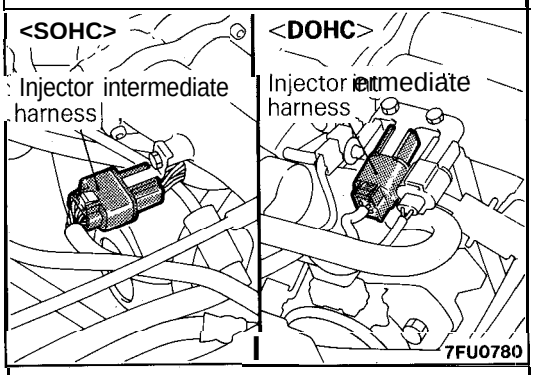

Measurement of Resistance between Rear Bank Terminals

(1) Disconnect the injector intermediate connector.

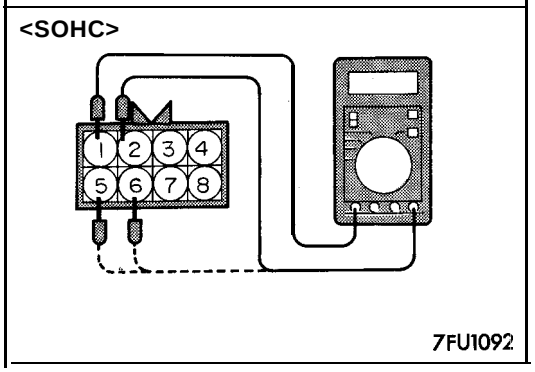

(2) Measure resistance between terminals

<SOHC>

Injector No.	Measuring terminals	Resistance
No. 2 No. 4 No. 6	1 - 2 1 - 5	13 – 16 Ω [At 20°C (68°F)]

<DOHC>

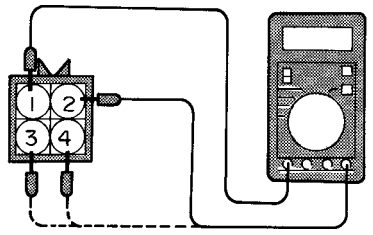

7FU1144

<DOHC>

Injector No.	Measuring terminals	Resistance
No. 2 No. 4 No. 6	1 - 2 1 - 3	13 – 16 Ω [At 20°C (68°F)]

(3) Connect the injector intermediate connector.

IDLE AIR CONTROL MOTOR (STEPPER MOTOR TYPE)

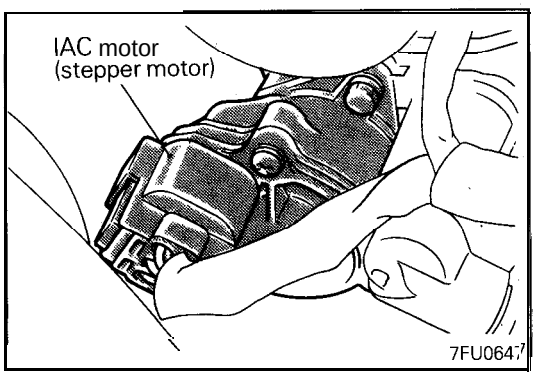

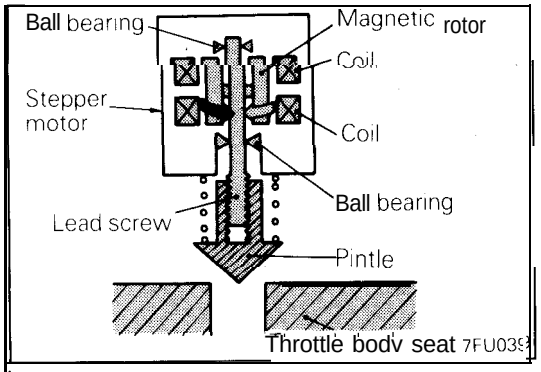

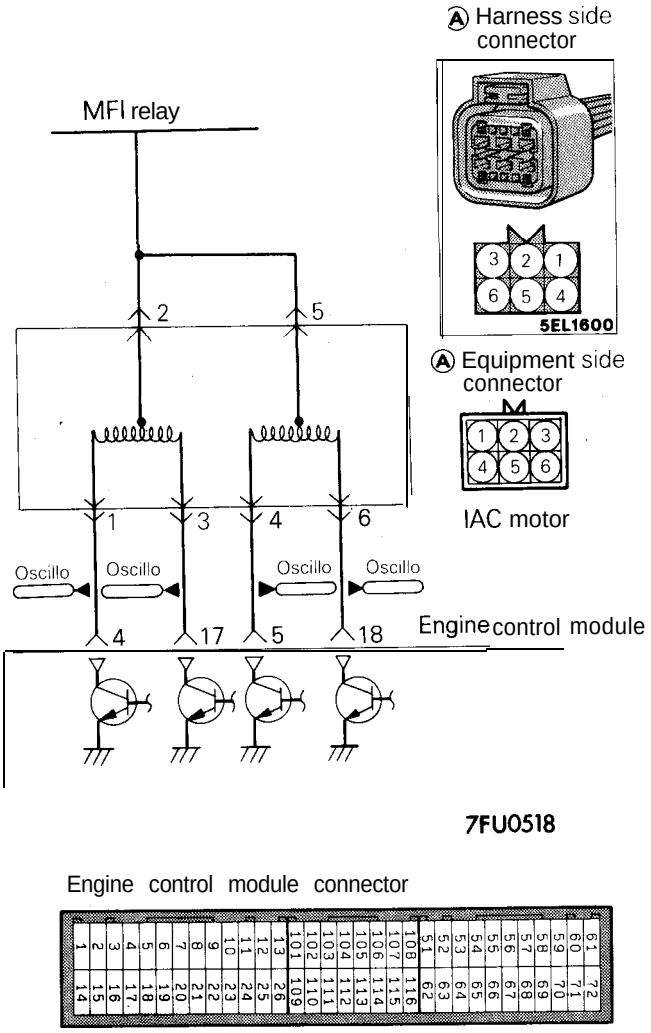

7FU0653

OPERATION

- The intake air volume during idling is controlled by opening or closing the servo valve provided in the air path that bypasses the throttle valve.
- The servo valve is opened or closed by operating the stepper motor in the speed control servo in normal or reverse direction.
- The battery power is supplied to the stepper motor through the MFI relay. As the engine control module turns on power transistors in the module one after another, the stepper motor coil is energized and the motor rotates in normal or reverse direction.

TROUBLESHOOTING HINTS

Hint 1: If the stepper motor step increases to 100 to 120 steps or decreases to 0 step, faulty stepper motor or open circuit in the harness is suspected.

Hint 2: If the idle air control motor harness and individual part checked good but the stepper motor steps are out of specification, the following faults are suspected.

(1) Poorly adjusted reference idle speed
(2) Deposit on the throttle valve
(3) Air leaking into the intake manifold through gasket gap
(4) Loose EGR valve seat
(5) Poor combustion in the cylinder (faulty ignition plug, ignition coil, injector, low compression pressure, etc.)

INSPECTION

Using Scan Tool

Function	Item No.	Data display	Check condition	Load state	Standard value
Data reading	45	Stepper motor steps	• Engine coolant temperature: 80 to 95°C (176 to 205°F) . Lights, electric cooling fan, accessory units: All OFF • Transaxle: Neutral (P range for vehicle with A/T>) • Steering wheel: Neutral • Idle position switch: ON (compressor clutch to be ON if air conditioning switch is ON) • Engine: Idling	Air conditioning switch: OFF	**2 – 25** step
				Air conditioning switch: ON	Increase by 10 – **70** step
				• Air conditioning switch: ON • Selector lever: Shift to D range	Increase by 5 – **50** step

NOTE
When the vehicle is new [within initial operation of about 500 km (300 miles)], the stepper motor steps may be about 30 steps more than standard.

Caution
When the selector lever is shifted to the "D" range, the brakes must be used to prevent the vehicle from moving forward.

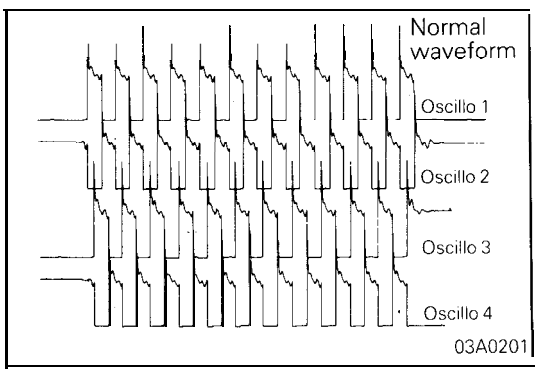

Using Oscilloscope

(1) Connect the probe to each oscilloscope pick-up point as shown in the circuit diagram.
(2) Start the engine.
(3) When the air conditioning switch is turned on, the idling speed increases to operate the idle speed control. Check the instantaneous waveform.

NOTE
Keep in mind that the waveform can be observed only when idle speed control is in operation.

HARNESS INSPECTION

1

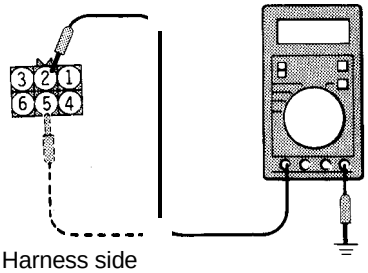

Measure the power supply voltage of idle air control motor.

- Idle air control motor connector: Disconnected
- Ignition switch: ON

Voltage (V)
B+

OK → 2

NG → Repair the harness. (MFI relay – Ⓐ2) (MFI relay – Ⓐ5)

2

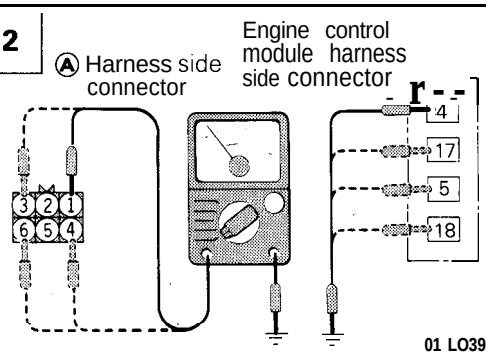

Check for an open-circuit, or a short-circuit to ground between the engine control module and the idle air control motor.

- Engine control module connector: Disconnected
- Idle air control motor connector: Disconnected

OK → STOP

NG → Repair the harness. (Ⓐ1 – 4) (Ⓐ3 – 17) (Ⓐ4 – 5) (Ⓐ6 – 18)

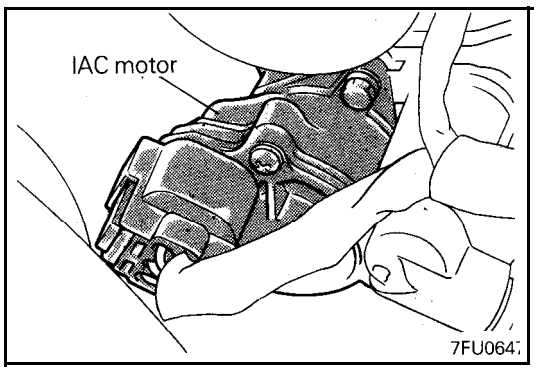

ACTUATOR INSPECTION

Checking the Operation Sound

(1) Check that the operation sound of the stepper motor can be -heard after the ignition is switched ON (but without starting the motor).

(2) If the operation sound cannot be heard, check the stepper motor's activation circuit.
If the circuit is normal, it is probable that there is a malfunction of the stepper motor or of the engine control module'.

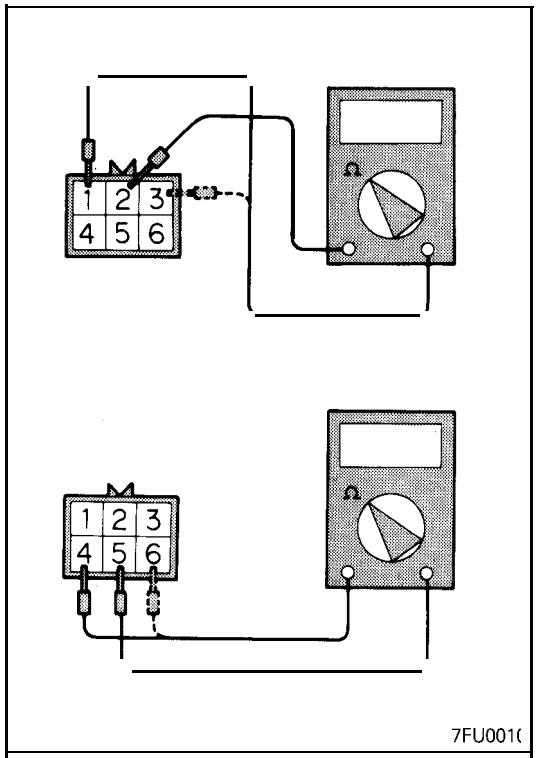

Checking the Coil Resistance

(1) Disconnect the idle air control motor connector and connect the special tool (test harness).
(2) Measure the resistance between terminal ② (white clip of the special tool) and either terminal ① (red clip) or terminal ③ (blue clip) of the connector at the idle air control motor side.

Standard value: 28 – 33 Ω at 20°C (68°F)

(3) Measure the resistance between terminal ⑤ (green clip of the special tool) and either terminal ⑥ (yellow clip) or terminal ④ (black clip) of the connector at the idle air control motor side.

Standard value: 28 – 33 Ω at 20°C (68°F)

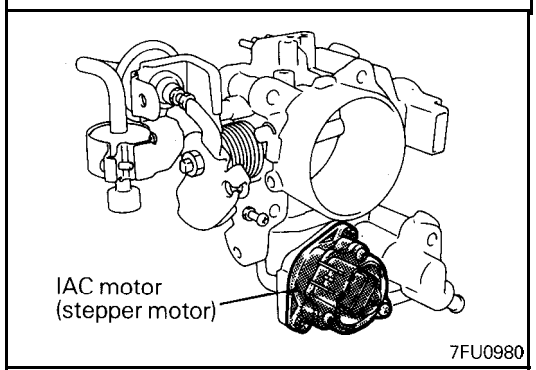

Operational Check

(1) Remove the throttle body.
(2) Remove the stepper motor.

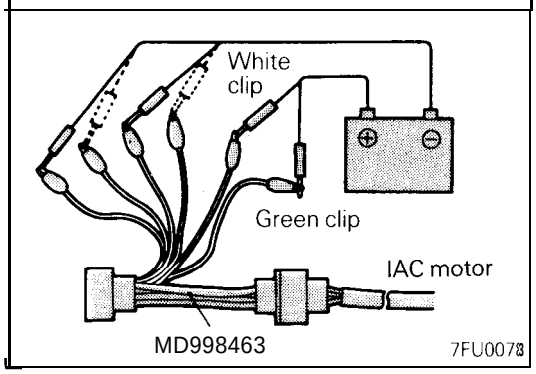

(3) Connect the special tool (test harness) to the idle air control motor connector.
(4) Connect the positive ⊕ terminal of a power supply (approx. 6 V) to the white clip and the green clip.

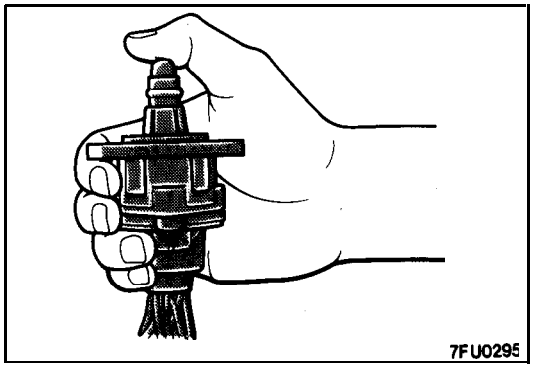

(5) With the idle air control motor as shown in the illustration, connect the negative ⊖ terminal of the power supply to each clip as described in the following steps, and check whether or not a vibrating feeling (a feeling of very slight vibration of the stepper motor) is generated as a result of the activation of the stepper motor.

① Connect the negative ⊖ terminal of the power supply to the red and black clip.
② Connect the negative ⊖ terminal of the power supply to the blue and black clip.
③ Connect the negative ⊖ terminal of the power supply to the blue and yellow clip.
④ Connect the negative ⊖ terminal of the power supply to the red and yellow clip.
⑤ Connect the negative ⊖ terminal of the power supply to the red and black clip.
⑥ Repeat the tests in sequence from ⑤ to ①.

(6) If, as a result of these tests, vibration is detected, the stepper motor can be considered to be normal.

IGNITION COIL AND IGNITION POWER TRANSISTOR <SOHC>

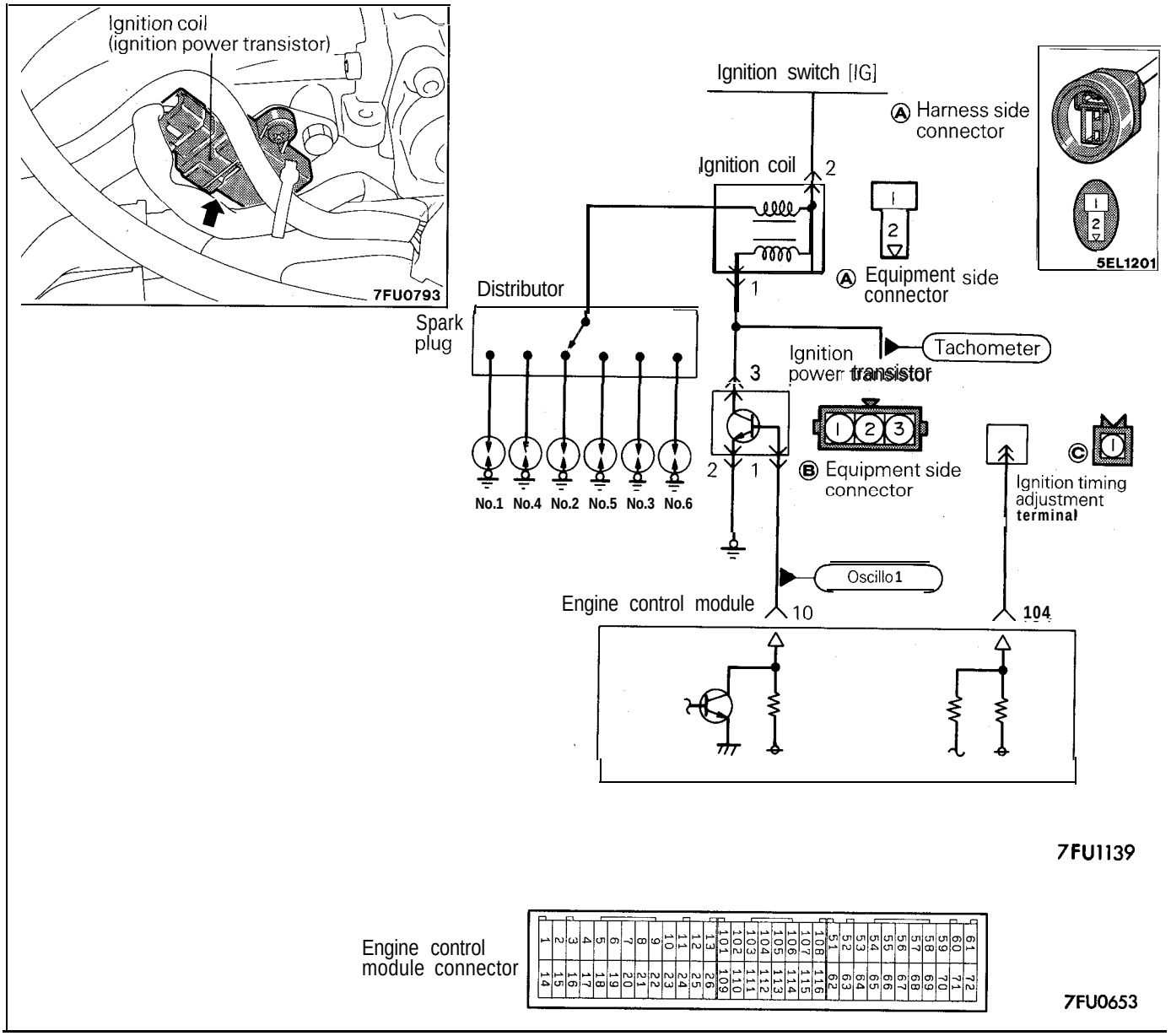

Engine control module connector

7FU0653

OPERATION

- When the ignition power transistor unit is switched ON by the signals from the engine control module, the primary current of the ignition coil will flow. When the ignition power transistor unit is switched OFF, the primary current flow is interrupted, and high voltage is produced at the secondary coil.
- When the engine control module switches OFF the transistor within the unit, the battery voltage within the module is applied to the ignition power transistor unit, and the ignition power transistor unit is switched ON. In addition, the ignition power transistor unit is switched OFF when the engine control module switches ON the transistor within the module.

INSPECTION

Using Scan Tool

Function	Item No.	Data display	Check condition	Engine state	Standard value
Data reading	44	Ignition advance	• Engine: Warm up • Timing light: Set (Use the timing light to check actual ignition timing)	700 rpm (Idling)	7 – 23°BTDC
				2,000 rpm	13 – 39°BTDC

<Ignition timing adjustment mode>

Function	Item No.	Data display	Check condition	Engine state	Normal display
Data list	36	Existence of continuity to ground if ignition timing adjustment terminal	Engine: Idling	Ground ignition timing adjustment terminal.	ON
				Remove ground from ignition timing adjustment terminal.	OFF

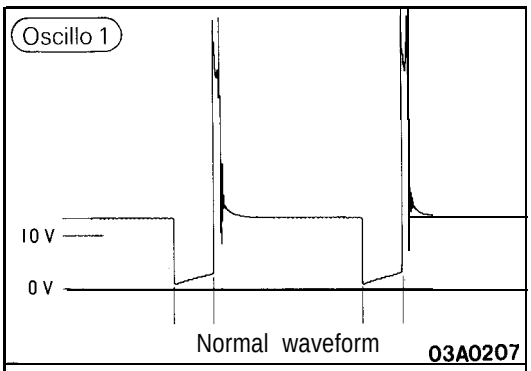

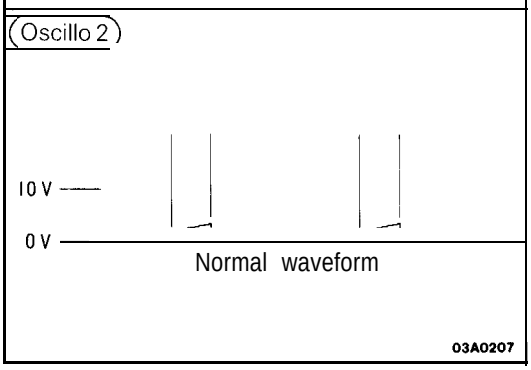

Using Oscilloscope

1. Primary signal of ignition coil
   (1) Run the engine at an idle speed.
   (2) Connect the probe to oscilloscope pick-up point 1 as shown in the circuit diagram, and check the primary signal of the ignition coil.

2. Control signal of ignition power transistor
   Connect the probe to oscilloscope pick-up point 2 as shown in the circuit diagram, and check the control signal of the ignition power transistor

HARNESS INSPECTION

1

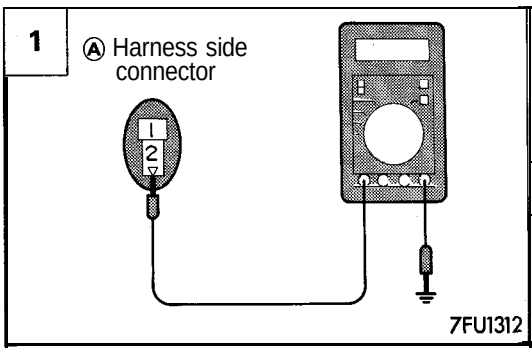

Measure the power supply voltage of the ignition coil.
- Connector: Disconnected
- Ignition switch: ON

Voltage (V)
B+

OK → 2

NG → Repair the harness. (Ⓐ2 – Ignition switch)

2

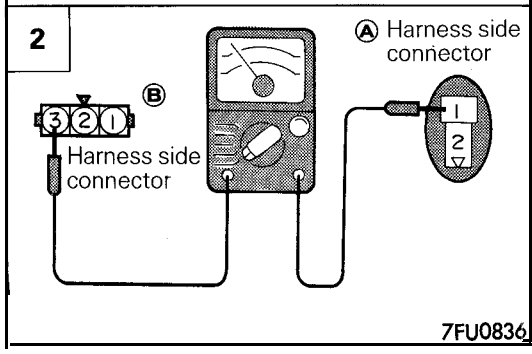

Check for continuity between the ignition power transistor unit and ignition coil.
- Ignition coil connector: Disconnected
- Ignition power transistor connector: Disconnected

OK → 3

NG → Repair the harness. (Ⓑ3 – Ⓐ1)

3	Ⓑ Harnessside connector 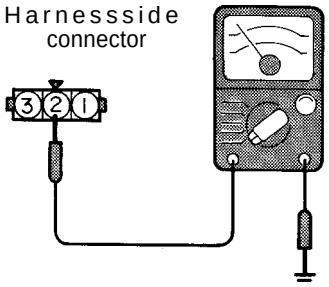 7FU0837	Check for continuity of the ground circuit of the ignition power transistor. • Ignition power transistor connector: Disconnected • Engine control module connector: Disconnected	OK → 4 NG → Repair the harness. (Ⓑ2 – Ground)
4	Ⓑ Harness side connector 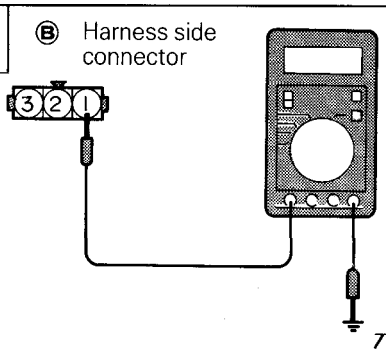 7FU1247	Measure the control signal voltage of the ignition power transistor. • Ignition power transistor connector: Disconnected • Ignition switch: START Voltage (V): 2.0 – 6.0	OK → 5 NG → Repair the harness. (Ⓑ1 – 10)
5	Ⓒ Ignition timing adjustment terminal 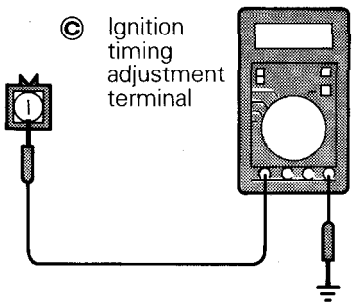 7FU1060	Measure the voltage of the ignition timing adjusting terminal. • Ignition switch: ON Voltage (V): 4.0 – 5.2	OK → STOP NG → Repair the harness. (Ⓒ1 – 104)

ACTUATOR INSPECTION

Refer to Group 8 – Ignition System

IGNITION COIL AND IGNITION POWER TRANSISTOR <DOHC>

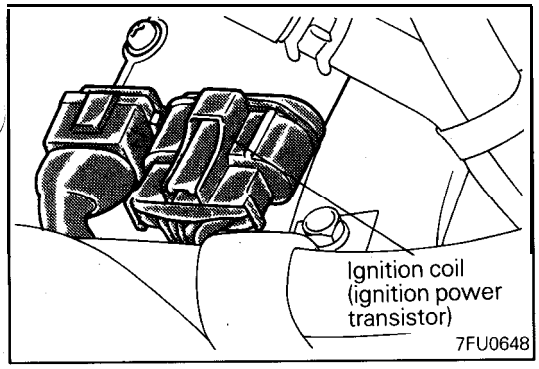

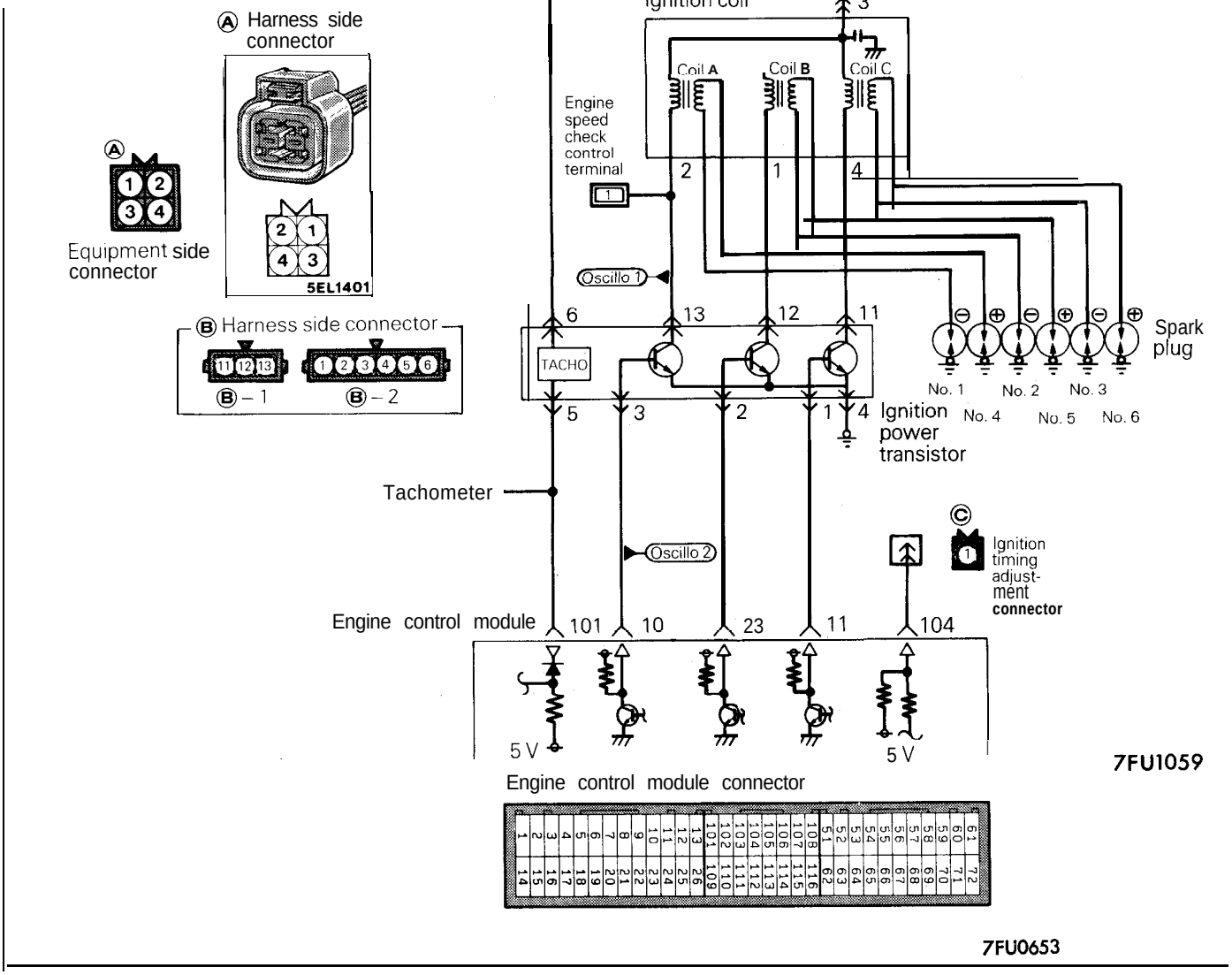

OPERATION

- When the ignition power transistor unit A is turned on by the signal from the engine control module, primary current flows to the ignition coil A. When the ignition power transistor unit A is turned off, the primary current is shut off and a high voltage is induced in the secondary coil A, causing the ignition plugs of No. 1 and No. 4 cylinders to spark. When the ignition power transistor unit B is turned off, the ignition plugs of No. 2 and No. 5 cylinders spark. In addition, when the ignition power transister unit C is turned off, the ignition plugs of No. 3 and No. 6 cylinders spark.
- When the engine control module turns off the transistor in the module, the battery voltage in the module is applied to the ignition power transistor unit to turn it on. When the engine control module turns on the transistor in the module, the ignition power transistor unit is turned off.

INSPECTION

Using Scan Tool

<Spark Advance>

Function	Item No.	Data display	Check condition	Engine state	Standard value
Data reading	44	Ignition advance	• Engine: Warming up • Timing light: Set (set timing light to check actual ignition timing)	700 rpm (Idle)	7 – 23°BTDC
				2,000 rpm	30 – 50°BTDC

<Ignition Timing Adjustment Mode>

Function	Item No.	Data display	Check condition	Terminal condition	Standard value
Data list	36	Continuity present or not present between ignition timing adjustment terminal and ground	• Engine: Idling	Ignition timing adjustment terminal is grounded	ON
				Ignition timing adjustment terminal is disconnected from ground	OFF

<Standard Ignition Timing>

Function	Item No.	Drive	Check condition	Normal condition
Actuator test	17	Set to ignition timing adjustment mode	• Engine: idling • Timing light: set	5°BTDC

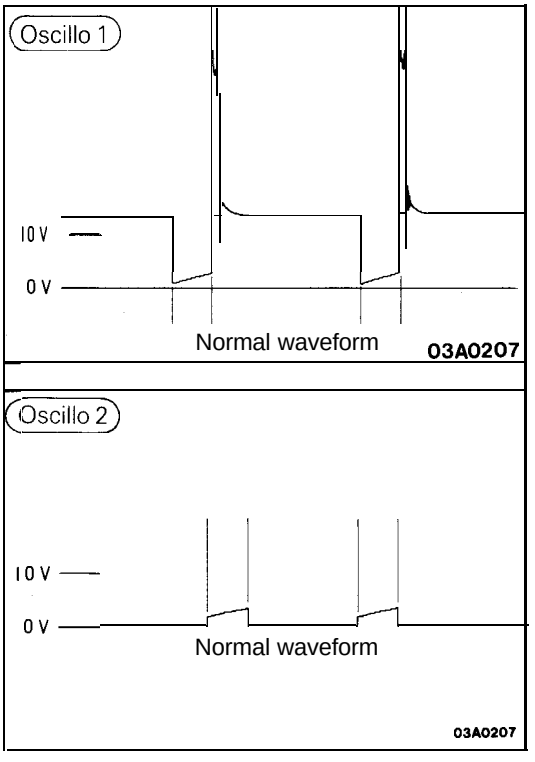

Using Oscilloscope

1. Primary signal of ignition coil
   (1) Run the engine at an idle speed.
   (2) Connect the probe to oscilloscope pick-up point 1 as shown in the circuit diagram, and check the primary signal of the ignition coil.

2. Control signal of ignition power transistor
   Connect the probe to oscilloscope pick-up point 2 as shown in the circuit diagram, and check the control signal of the ignition power transistor.

HARNESS INSPECTION

1

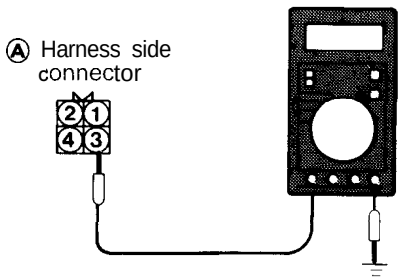

01L0411

Measure the power supply voltage of the ignition coil.

- Connector: Disconnected
- Ignition switch: ON

Voltage (V)
B+

OK → 2

NG → Repair the harness. (Ⓐ 3 – Ignition switch)

2

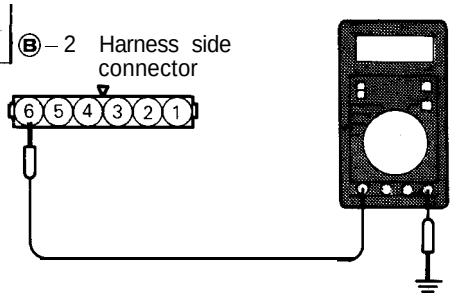

7FU0698

Measure the power supply voltage of the ignition coil.

- Connector: Disconnected
- Ignition switch: ON

Voltage (V)
B+

OK → 3

NG → Repair the harness. (Ⓑ 6 – Ignition switch)

3

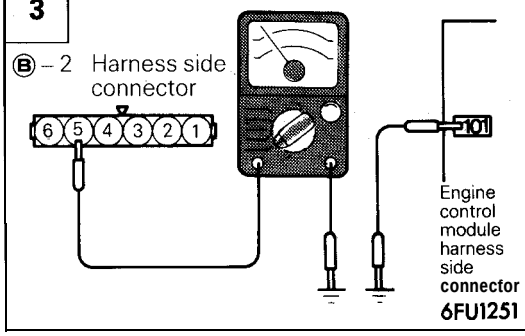

6FU1251

Check for an open-circuit, or a short-circuit to ground between the engine control unit and the ignition power transistor.

- Engine control module connector: Disconnected
- Ignition power transistor connector: Disconnected

OK → 4

NG → Repair the harness. (Ⓑ 5 – 101)

4

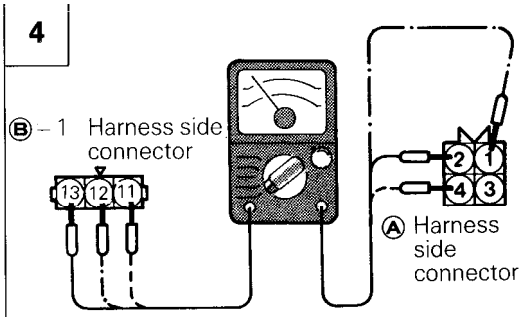

7FU0699

Check for an open-circuit, or a short-circuit to ground between the ignition power transistor and the ignition coil.

- Ignition coil connector: Disconnected
- Ignition power transistor connector: Disconnected

OK → 5

NG → Repair the harness.
(Ⓐ 2 – Ⓑ 13)
(Ⓐ 1 – Ⓑ 12)
(Ⓐ 4 – Ⓑ 11)

5	Check for continuity of the ground circuit. • Connector: Disconnected	OK →	6
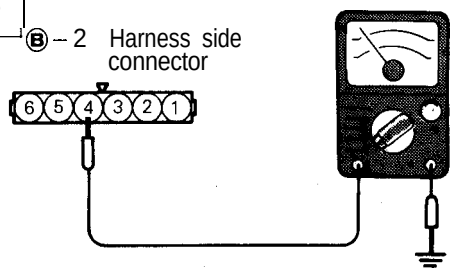 7FU0700		NG →	Repair the harness. (Ⓑ 4 – Ground)
6	Measure the voltage of the control signal circuit of the ignition power transistor. • Connector: Disconnected • Ignition switch: START Voltage (V): 0.5 – 4.0	OK →	7
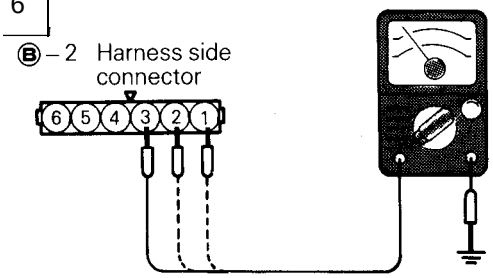 7FU0701		NG →	Repair the harness. (Ⓑ 3 – 10) (Ⓑ 2 – 23) (Ⓑ 1 – 11)
7	Measure the voltage of the ignition timing adjustment terminal. • Ignition switch: ON Voltage (V): 4.0 – 5.2	OK →	STOP
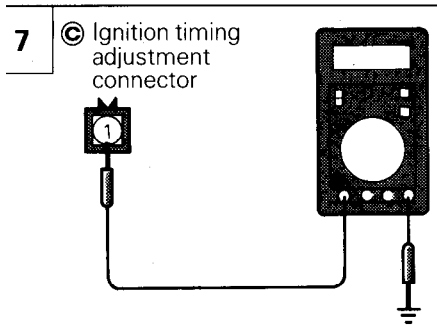 7FU1060		NG →	Repair the harness. (Ⓒ 1 – 104)

ACTUATOR INSPECTION

Refer to GROUP 8 – Ignition System.

EVAPORATIVE EMISSION PURGE SOLENOID

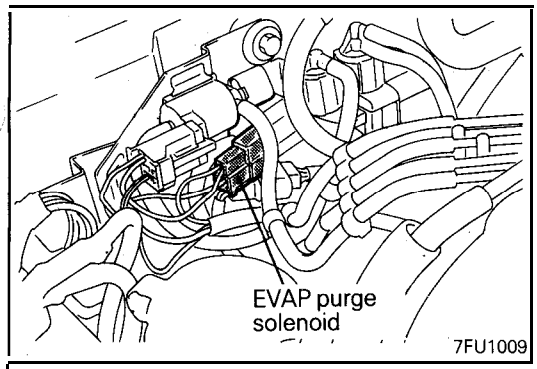

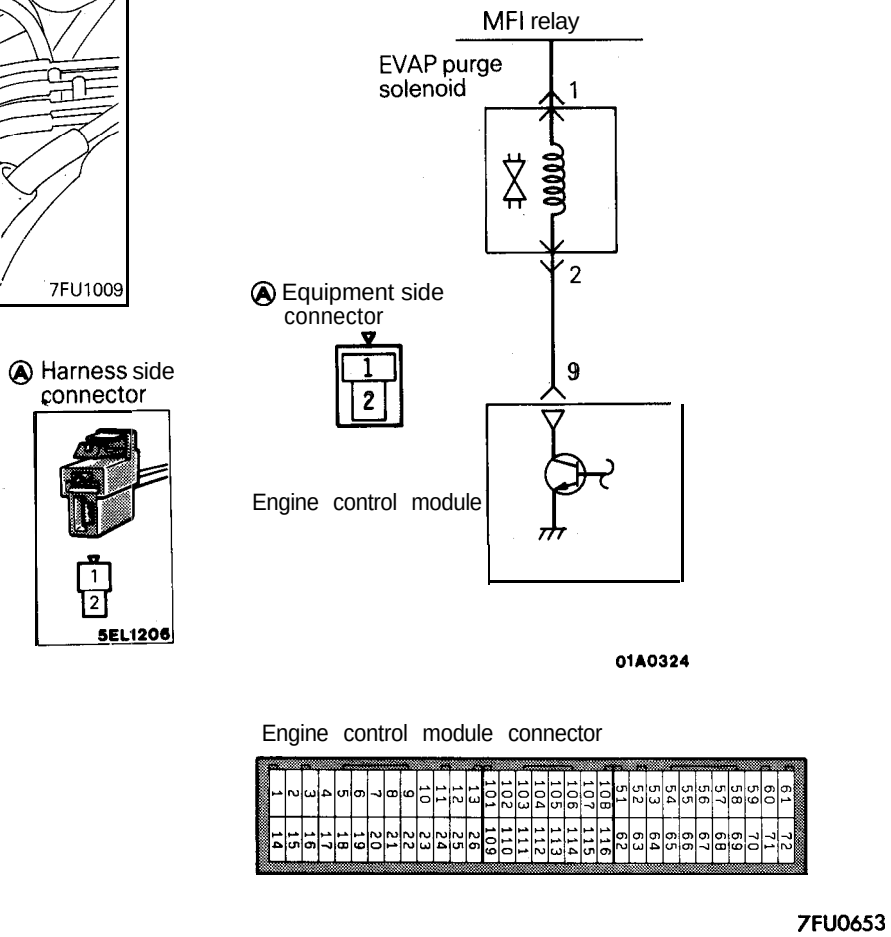

OPERATION

- The evaporative emission purge solenoid is an ON-OFF type one which controls introduction of purge air from the canister into the intake air plenum.
- The battery power is supplied to the evaporative emission purge solenoid through the MFI relay. When the engine control module turns ON the power transistor in the module, current flows to the coil, introducing purge air.

INSPECTION

Using Scan Tool

Function	Item No.	Drive content	Check condition	Normal state
Actuator test	08	Solenoid valve from OFF to ON	Ignition switch: ON	Operating sound is heard when driven

HARNESS INSPECTION

1 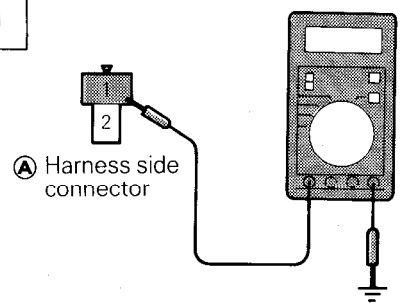	Measure the power supply voltage. • Connector: Disconnected • Ignition switch: ON Voltage (V): B+	OK →	2
		NG →	Repair the harness. (MFI relay – Ⓐ1)
2 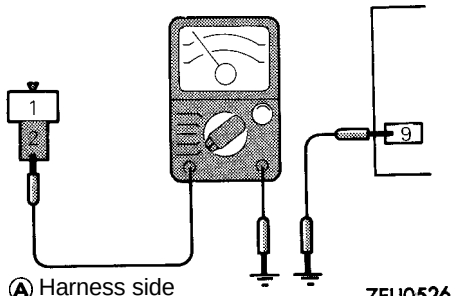	Check for an open-circuit, or a short-circuit to ground between the evaporative emission purge solenoid and the engine control module. • Engine control module connector: Disconnected • Evaporative emission purge solenoid connector: Disconnected	OK →	STOP
		NG →	Repair the harness. (Ⓐ2 – 9)

ACTUATOR INSPECTION

Refer to GROUP 25 – Evaporative Emission Control System.

EGR SOLENOID <California>

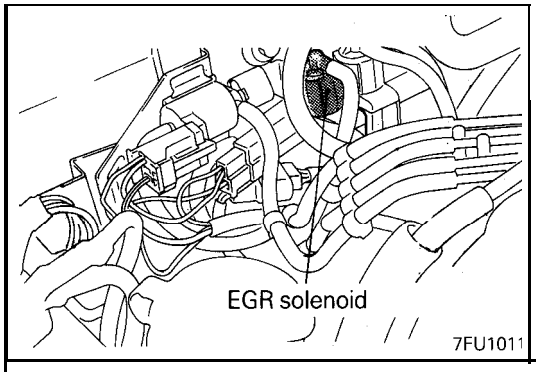

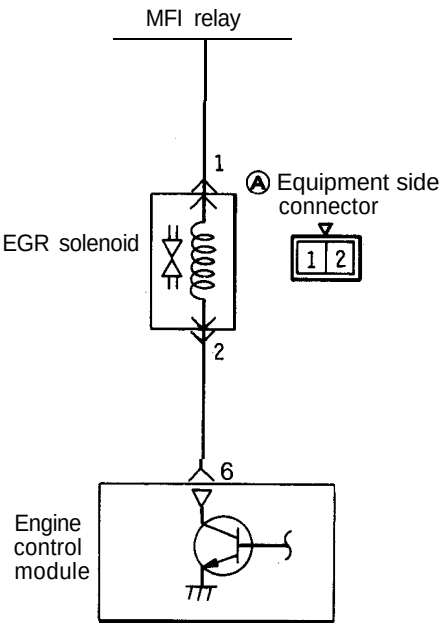

Engine control module connector

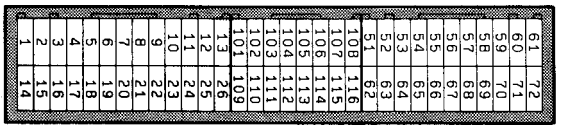

7FU0653

OPERATION

- The EGR solenoid is a duty control type solenoid valve. It makes control by leaking EGR valve operating negative pressure to the throttle body A port.
- Power supply from the battery is sent through the MFI relay to the EGR solenoid. When the engine control module turns off the power transistor inside the module, current no more flows through the coil and EGR valve operating negative pressure leaks.

TROUBLESHOOTING HINT

If the results of EGR solenoid on-vehicle and off-vehicle inspections are normal but the diagnostic trouble code for EGR system failure is displayed, check the EGR valve, vacuum hose and EGR passage for blocking.

INSPECTION

Using Scan tool

Function	Item No.	Drive content	Check condition	Normal state
Actuator test	10	Change solenoid valve from OFF to ON state	Ignition switch: ON	Operating sound is heard when driven

HARNESS INSPECTION

1

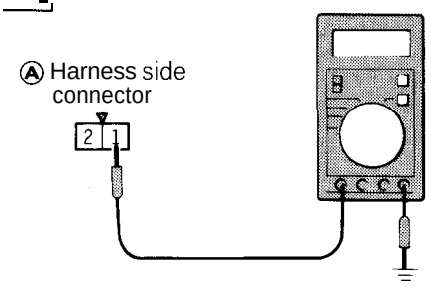

Measure the power supply voltage.

- Connector: Disconnected
- Ignition switch: ON

Voltage (V)
B+

OK → 2

NG → Repair the harness. (Ⓐ1 – MFI relay)

2

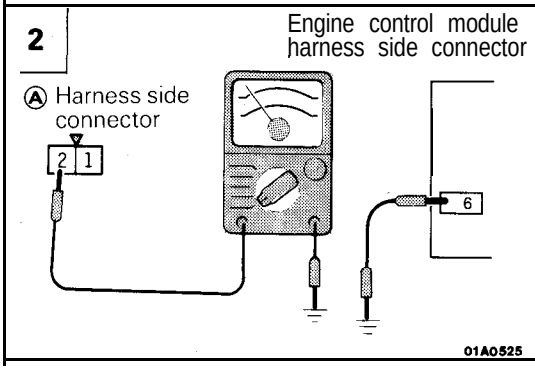

Check for an open-circuit, or a short-circuit to ground between the EGR solenoid and the engine control module.

- EGR solenoid connector: Disconnected
- Engine control module connector: Disconnected

OK → STOP

NG → Repair the harness. (Ⓐ2 – 6)

ACTUATOR INSPECTION

Refer to GROUP 25 – Exhaust Gas Recirculation (EGR) System.

VARIABLE INDUCTION CONTROL MOTOR (DC MOTOR) <DOHC>

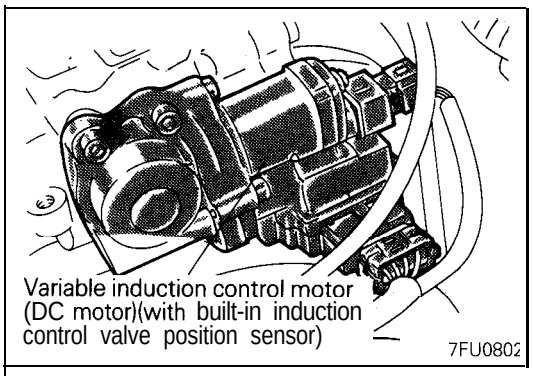

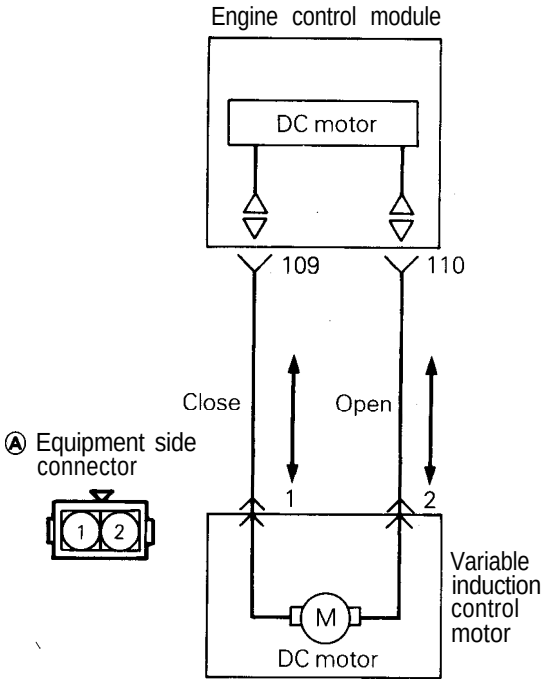

Engine control module connector

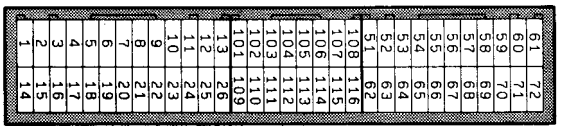

7FU0653

OPERATION

- As the DC motor is driven clockwise or counterclockwise by the signal from the engine control module, the variable induction valve opens or closes.
- The DC motor is driven clockwise or counterclockwise as the direction of current flow is changed by the motor drive IC in the engine control module.

INSPECTION

Using Scan Tool

Function	Item No.	Drive content	Check condition	Normal state
Actuator test	11	Drive the variable induction control (VIC) motor (Open and close the variable induction valve)	Ignition switch: ON	Turn the variable induction valve shaft (Variable induction valve: FULL CLOSE → FULL OPEN

HARNESS INSPECTION

1 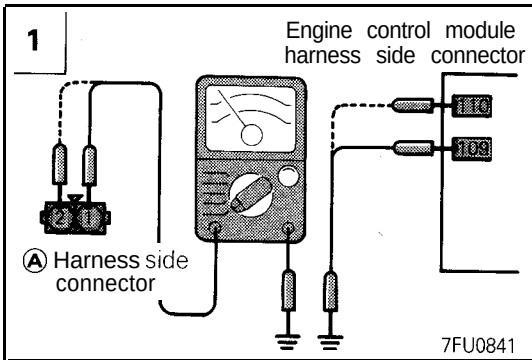	Check for an open-circuit,or a short-circuit to ground, between the engine control module and the variable induction control motor connector. • Variable induction control motor connector: Disconnected • Engine control module connector: Disconnected	OK → STOP OK → Repair the harness. (Ⓐ1 – 109) (Ⓐ2 – 110)

ACTUATOR INSPECTION

Refer to GROUP 11.

ENGINE AND TRANSAXLE TOTAL CONTROL SIGNAL <A/T>

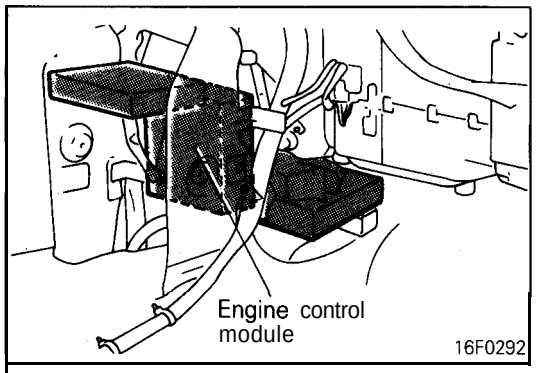

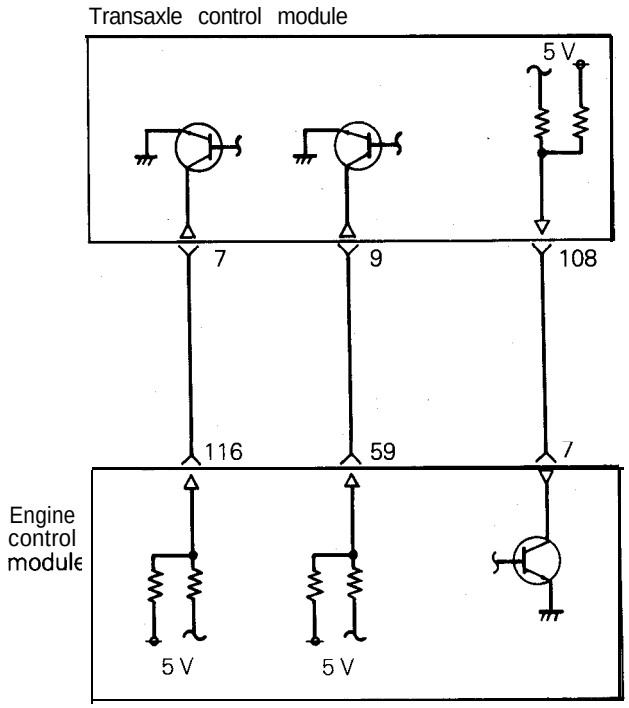

7FU0843

Ⓐ Transaxle control module connector

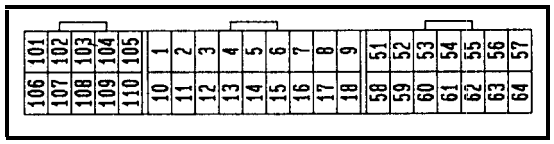

7FU0903

Engine control module connector

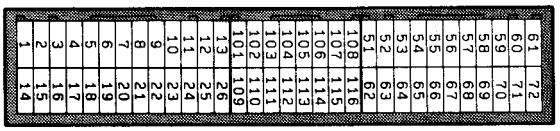

7FU0653

OPERATION

- Three communication lines are connected between the engine control module and the transaxle control module to send and receive the engine and transaxle total control signal.
- If the transistor inside the engine control module changes from OFF to ON by the command of the engine control module, the terminal having a voltage of 5 V applied to it from the transaxle control module is grounded in the engine control module.
  This will change the terminal voltage of the transaxle control module from HIGH to LOW.
  If the transistor fitted inside the engine control module changes from ON to OFF, the terminal, having applied to it a voltage of 5 V from the transaxle control module and grounded in the engine control module, is released and the terminal voltage of the transaxle control module changes from LOW to HIGH.
  In this way, the terminal voltage of the transaxle control module is controlled by ON/OFF operation of the transistor inside the engine control module in order to send signal.
  On the other hand, the transaxle control module also controls the terminal voltage of the engine control module by the ON/OFF operation of the transistor fitted inside the transaxle control module in order to send signal. In this way, the engine and transaxle send control signal to each other.

HARNESS INSPECTION

1 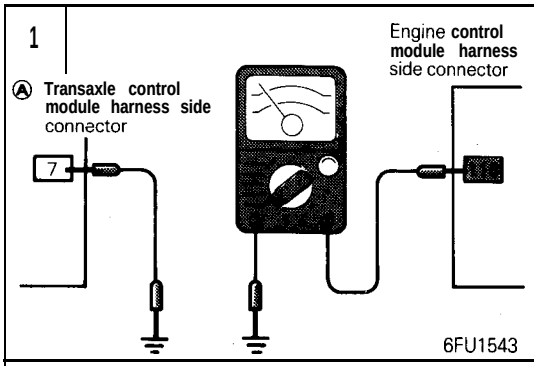	Check for an open-circuit, or a short-circuit to ground between the trans-'axle control module and the engine control module. • Transaxle control module connector: Disconnected • Engine control module connector: Disconnected	OK →	2
		NG →	Repair the harness. (Ⓐ 7 – 116)
2 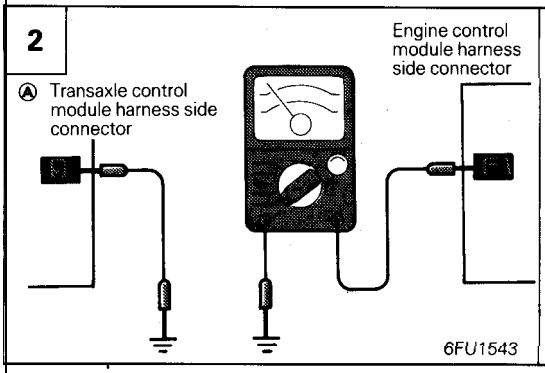	Check for an open-circuit, or a short-circuit to ground between the trans-axle control module and the engine control module. • Transaxle control module connector: Disconnected • Engine control module connector: Disconnected	OK →	3
		NG →	Repair the harness. (Ⓐ 9 – 59)
3 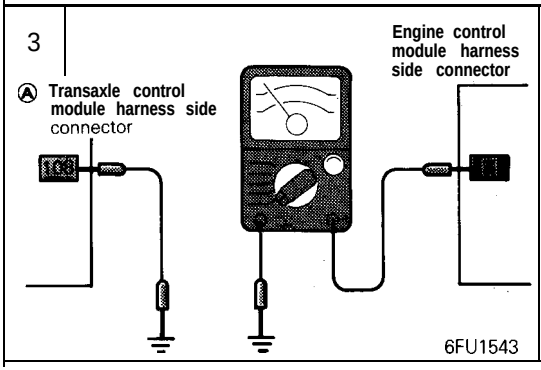	Check for an open-circuit, or a short-circuit to ground between the trans-axle control module and the engine control module. • Transaxle control module connector: Disconnected • Engine control module connector:' Disconnected	OK →	STOP
		NG →	Repair the harness. (Ⓐ 108 – 7)

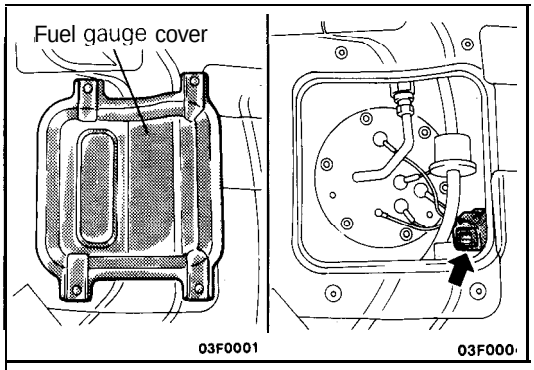

RELEASE OF RESIDUAL PRESSURE FROM HIGH PRESSURE FUEL HOSE

Make the following operations to release the pressure remaining in fuel pipe line so that fuel will not flow out.

(1) Remove the fuel gauge cover in the luggage compartment.
(2) Disconnect the fuel pump harness connector.
(3) Start the engine and after it stops by itself, turn the ignition switch to OFF.
(4) Connect the fuel pump harness connector.

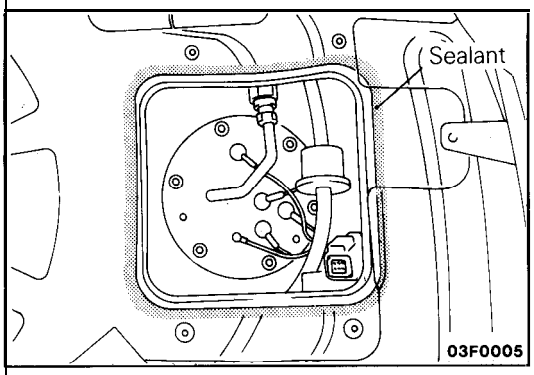

(5) Apply the specified sealant to the rear floor pan.
Specified sealant: 3M ATD Part No. 8509 or equivalent
(6) Install the fuel gauge cover.

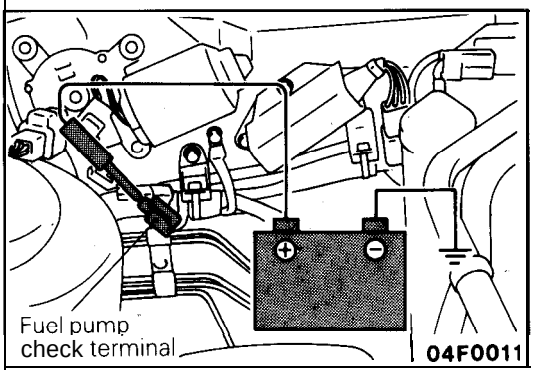

FUEL PUMP OPERATION CHECK

(1) Set the ignition switch at OFF.
(2) Check that when the battery voltage is directly applied to the fuel pump check terminal (black), the operating sound of the pump can be heard.

NOTE
Since the fuel pump is installed in the fuel tank, its operating sound cannot be readily heard. Remove the fuel tank cap and listen to the operating sound through the filter port.

(3) Hold the high pressure fuel hose between your fingers and check that the fuel pressure can be felt.

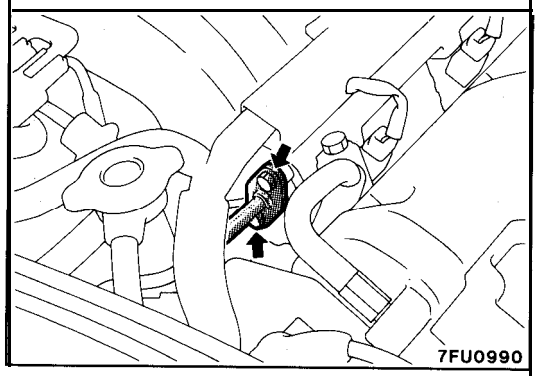

FUEL PRESSURE TEST

(1) Reduce the internal pressure of the fuel pipes and hoses.
(2) Disconnect the fuel high pressure hose at the fuel rail side.

Caution
Cover the hose connection with rags to prevent splash of fuel that could be caused by some residual pressure in the fuel pipe line.

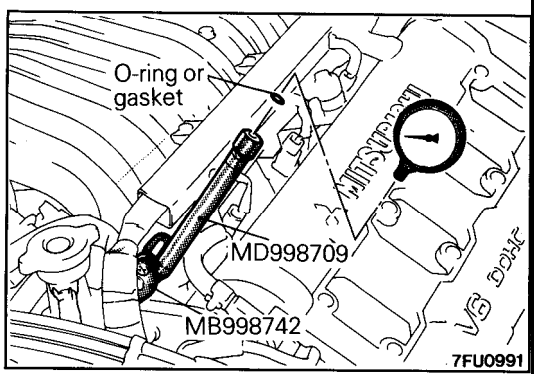

(3) Set a fuel pressure gauge on the special tool, placing an adequate O-ring or gasket between the gauge and special tool prevent fuel leaks.
(4) Attach the special tool set in step (3) to the fuel rail between high pressure hoses.

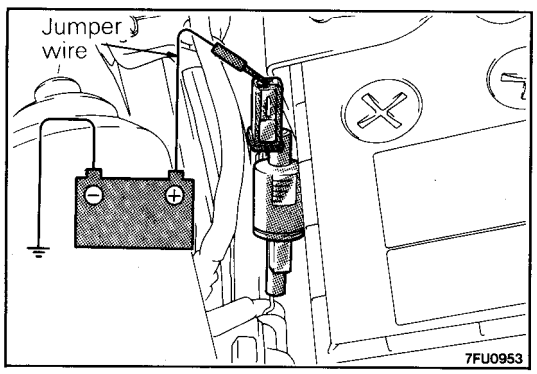

(5) Connect a jumper wire to the terminal for activation of the fuel pump and to the positive ⊕ terminal of the battery to activate the fuel pump. With fuel pressure applied, check to be sure that there is no fuel leakage from the fuel pressure gauge and the special tool connection part.
(6) Disconnect the jumper wire (from the terminal for activation of the fuel pump) to stop the fuel pump.
(7) Start the engine and let it idle.

(8) Measure the fuel pressure during idling.

Standard value: Approx. 270 kPa (38 psi) at curb idle

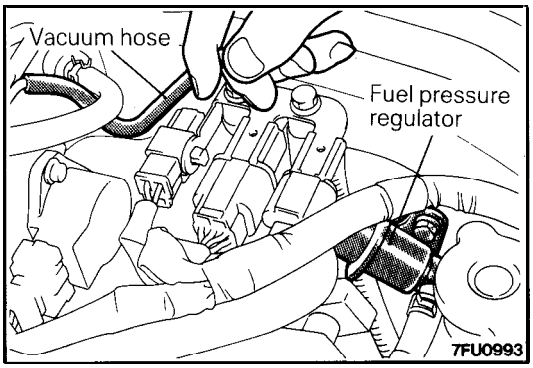

(9) Disconnect the vacuum hose from the fuel pressure regulator, and then measure the fuel pressure while using a finger to plug the end of the hose.

Standard value: 330 – 350 kPa (47 – 50 psi) at curb idle

(10) Check to be sure that the fuel pressure during idling does not decrease even after the engine is raced a few times.

(11) Use a finger to gently press the fuel return hose while repeatedly racing the engine, and check to be sure that there is fuel pressure in the return hose also.

NOTE
There will be no fuel pressure in the return hose if there is insufficient fuel flow.

(12) If the fuel pressure measured in steps (8) to (11) deviates from the standard value range, check for the probable cause by referring to the table below, and then make the appropriate repair.

Condition	Probable cause	Remedy
• Fuel pressure is too low. • Fuel pressure drops during racing. • No fuel pressure in fuel return hose.	Fuel filter is clogged.	Replace the fuel filter.
	Malfunction of the valve seat within the fuel pressure regulator, or fuel leakage to return side caused by spring deterioration.	Replace the fuel pressure regulator.
	Fuel pump low discharge pressure.	Replace the fuel pump.
Fuel pressure is too high.	The valve within the fuel pressure regulator is sticking.	Replace the fuel pressure regulator.
	Clogging of the fuel return hose and/ or the pipe.	Clean or replace the hose and/or pipe.
No change of the fuel pressure when the vacuum hose is connected and when not connected.	Damaged vacuum hose or nipple clogging.	Replace the vacuum hose, or clean the nipple.

(13) Stop the engine and check for a change of the value indicated by the fuel pressure gauge. The condition is normal if there is no decrease of the indicated value within two minutes.
If there is a decrease of the indicated value, monitor the speed of the decrease, and, referring to the table below, determine the cause of the problem and make the appropriate repair.

Condition	Probable cause	Remedy
After the engine is stopped, the fuel pressure drops gradually.	Injector leakage.	Replace the injector.
	Leakage at the fuel pressure regulator valve seat.	Replace the fuel pressure regulator.
There is a sudden sharp drop of the fuel pressure immediately after the engine is stopped.	The check valve (within the fuel pump) is not closed.	Replace the fuel pump.

(14) Reduce the internal pressure of the fuel pipes and hoses.
(15) Disconnect the fuel pressure gauge and the special tools from the delivery pipe.

Caution
Because there will be some residual pressure in the fuel pipe line, use a shop towel to cover so that fuel doesn't splatter.

(16) Replace the O-ring at the end of the fuel high-pressure hose with a new one.
(17) After connecting the fuel high-pressure hose to the fuel rail, tighten the installation bolt at the specified torque.

Tightening torque: 5.0 Nm (3.6 ft.lbs.)

(18) Check to be sure that there is no fuel leakage.
① Apply battery voltage to the terminal for activation of the fuel pump so as to activate the fuel pump.
② With fuel pressure applied, check for leakage of the fuel line.

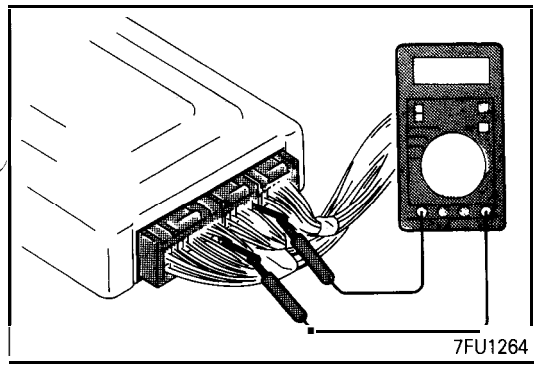

ENGINE CONTROL MODULE (ECM) TERMINAL VOLTAGES INSPECTION

(1) Connect a very thin wire probe (such as a paper clip) to the probe of the voltmeter.
(2) Insert the very thin probe from the wire side into contact with each of the terminals of the ECM connector and check the voltage, while referring to the check chart.

NOTE
1. Measure a voltage with the ECM connector connected.
2. Measure the voltage between each terminal and the No. 26 terminal (ground terminal).
3. Withdraw the ECM for easier access to the connector terminals.
4. The inspection need not be performed in the order of the chart.

Caution
Short-circuiting the positive (+) probe between a connector terminal and ground could cause damage to the vehicle wiring, sensors or ECM, or all of them. Use care to prevent it!

(3) If the voltmeter shows any deviation from the standard value, check the corresponding sensor, actuator and related electrical wiring, then repair or replace.
(4) After repair or replacement, recheck with the voltmeter to confirm that the problem has cleared completely.

TERMINAL VOLTAGE CHECK CHART

Engine Control Module Connector Terminal Configuration

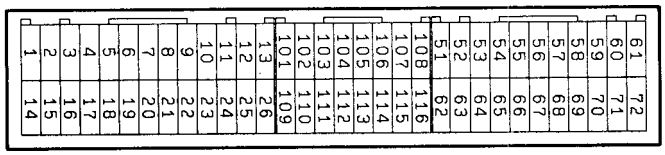

7FU0653

Terminal No.	Check point	Check conditions (Engine conditions)	Standard value	Remarks
60	Back-up power supply	Ignition switch: OFF	B+	
12	Power supply	Ignition switch: ON	B+	
25				
62	Ignition switch IG	Ignition switch: ON	B+	
108	MFI relay (power supply)	Ignition switch: OFF	B+	
		Ignition switch: ON	o - 3 v	
8	MFI relay (fuel pump)	Ignition switch: ON	B+	
		Engine: Idle	o - 3 v	
61	Sensor impressed voltage	Ignition switch: ON	4.5 – 5.5V	

Terminal No.	Check point	Check conditions (Engine conditions)		Standard value	Remarks
70	Volume air flow sensor	Engine: Idle		2.2 – 3.2V	
		Engine: 2,000 rpm			
19	Volume air flow sensor reset signal	Engine: idle		O - I V	
		Engine: 3,000 rpm		6 – 9V	
52	Intake air temperature sensor	Ignition switch: ON	When intake temperature is 0°C (32°F)	3.2 – 3.8V	
			When intake temperature is 20°C (68°F)	2.3 – 2.9V	
			When intake temperature is 40°C (104°F)	1.5 – 2.1V	
			When intake temperature is 80°C (176°F)	0.4 – 1.0V	
65	Barometric pressure sensor	Ignition switch: ON	When altitude is 0 m (0 ft.)	3.7 – 4.3V	
			When altitude is 1,200 m (3,937 ft.)	3.2 – 3.8V	
63	Water temperature sensor	Ignition switch: ON	When water temperature is 0°C (32°F)	3.2 – 3.8V	
			When water temperature is 20°C (68°F)	2.3 – 2.9V	
			When water temperature is 40°C (104°F)	1.3 – 1.9V	
			When water temperature is 80°C (176°F)	0.3 – 0.9V	
64	Throttle position sensor	Ignition switch: Kept in ON state for more than 15 seconds	Idle	0.3 – 1.0V	
			Wide open throttle	4.5 – 5.5V	
67	Closed throttle position switch	Ignition switch: ON	Throttle valve placed in idle position	0 – IV	
			Throttle valve placed in slightly opened position	4V or more	
68	Camshaft position sensor	Engine: Cranked		0.2 – 3.0V	
		Engine: Idle			
69	Crankshaft position sensor	Engine: Cranked		0.2 – 3.0V	
		Engine: Idle			
51	Ignition switch – ST	Engine: Cranked		8V or more	M/T
71	Park/Neutral position switch	Ignition switch: ON	Selector lever set to P or N	o - 3 v	A/T
			Selector lever set to D, 2, L or R	8 – 14V	

Terminal No.	Check point	Check conditions (Engine conditions)		Standard value	Remarks
66	Vehicle speed sensor	● Ignition switch: ON ● Move the vehicle slowly forward		0 ↔ 5V (Changes repeated)	
107	Power steering pressure switch	Engine: Idle, warm	Steering wheel placed in neutral (straight ahead) position	B+	
			Steering wheel turned half a turn	0 – 3V	
115	Air conditioning switch 1	Engine: Idle	Air conditioning switch set to OFF	0 – 3V	
			Air conditioning switch set to ON (Air conditioning compressor in driven state)	B+	
101 <SOHC> 20 <DOHC>	Air conditioning switch 2	Engine: Running at idle	Air conditioning switch set to OFF	0 – 3V	
			• Air conditioning switch set to ON • Indoor set temperature brought closer to atmospheric temperature	B+	
22	Air conditioning relay	● Engine: Idle ● Air conditioning switch: OFF → ON (Air compressor in driven state)		B+ or 6V or more for a moment → 0 – 3V	
20 <SOHC> 6 <DOHC>	Fan motor relay (Lo)	Radiator fan not operating [Coolant temperature: below 90°C (194°F)]		B+	
		Radiator fan operating at low speeds [Coolant temperature: 95 – 105°C (203 – 221 °F)]		o - 3 v	
21 <SOHC> 53 <DOHC>	Fan motor relay (Hi)	Radiator fan not operating [Coolant temperature: below 90°C (194°F)]		B+	
		Radiator fan operating at high speeds [Coolant temperature: above 105°C (221 °F)]		o - 3 v	
24	Electric load switch	Engine: Running at idle	Lighting switch set to OFF	o - 3 v	DOHC
			Lighting switch set to ON	B+	
55 56	Heated oxygen sensor (front)	Engine: warm, 2,000 rpm (Check using a digital type voltmeter.)		0 ↔ 0.8V (Changes repeatedly)	All models (For Federal and Canada terminal 56 only)
102 105	Heated oxygen sensor (rear)	● Transaxle: 2nd gear <M/T>, L range <A/T> ● Drive with wide open throttle ● Engine: 3,500 rpm or more		0.6 – 1.0V	California
1	No. 1 injector	Engine: Running at idle after warmup, and accelerated abruptly by depressing accelerator pedal		Falls temporarily a little from 11 – 14V.	
14	No. 2 injector				
2	No. 3 injector				
15	No. 4 injector				
3	No. 5 injector				
16	No. 6 injector				

Terminal No.	Check point	Check conditions (Engine conditions)		Standard value	Remarks
4	Stepper motor coil <A1>	Engine: warm Check immediately after hot restart.		B+ ↑ ↓ 0 – 3V (Changed repeated)	
17	Stepper motor coil <A2>				
5	Stepper motor coil <B1>				
18	Stepper motor coil <B2>				
10	Ignition power transistor unit A	Engine: 3,000 rpm		0.3 – 3v	
23	Ignition power transistor unit B				DOHC
11	Ignition power transistor unit C				
9	Evaporative emission purge solenoid	Ignition switch: ON		B+	California
		Engine: warm, 3,000 rpm		o - 3 v	
101	Engine ignition signal	Engine: 3,000 rpm		0.3 – 3v	DOHC
104	Ignition timing adjustment terminal	Ignition switch: ON	Ignition timing adjustment terminal connected to ground	O - I V	
			Ignition timing adjustment terminal disconnected from ground	4.0 – 5.5V	
106	Check engine/malfunction indicator lamp	Ignition switch: OFF → ON		0 – 3V ↓ 9 – 13V (Several seconds later)	
6	EGR solenoid	Ignition switch: ON		B+	California
		Engine: Idle Suddenly depress the acceleration pedal.		Falls temporarily from B+.	
53	EGR temperature sensor	Ignition switch: ON	When sensor temperature is 50°C (122°F)	3.6 – 4.4V	California
			When sensor temperature is 100°C (2 12°F)	2.2 – 3.0V	
54 57	Oxygen sensor heater	Engine: Idle, warm		o - 3 v	California
		Engine speed: 5,000 rpm		B+	
111	Induction control valve position sensor No. 1	Ignition switch: ON		0 - 1V or 4.5 – 5.5V	DOHC
		Engine: Slowly accelerated from idling speed to 5,000 rpm		0 – 1V or 4.5 – 5.5V ↓ 1.5 – 4V (for a moment)	

Terminal No.	Check point	Check conditions (Engine conditions)	Standard value	Remarks
103	Induction control valve position sensor No. 2	Ignition switch: ON	0 – 1V or 4.5 – 5.5V	DOHC
		Engine: Slowly accelerated from idling speed to 5,000 rpm	0 - 1V or 4.5 – 5.5V ↓ 1.5 – 4V (for a moment)	
110	Induction control valve (Opened)	Engine: Slowly accelerated from idling speed to 5,000 rpm	O - I V ↓ 4V or more (for a moment)	DOHC
109	Induction control valve (Closed)	Engine: Slowly decelerated from 5,000 rpm to idling speed		
116	Total control "Reduce torque" request signal 1	Engine: Idle	4.5 – 5.5V	A/T
		Engine: Running at idle after warmup and changing speeds	O - I V	
59	Total control "Reduce torque" request signal 2	Engine: Idle	O - I V	A/T
		Engine: Running at idle after warmup and changing speeds	1 – 5.5V	
7	Total control "Reduce torque" execution signal	Engine: Running at idle with coolant temperature at 50°C (122°F) or lower	0 – IV	A/T
		Engine: Idle, warm	1 – 4V	

ON-VEHICLE INSPECTION OF MFI COMPONENTS <California – DOHC Non Turbo, Turbo>

COMPONENT LOCATION

Name	Symbol	Name	Symbol
Air-conditioning relay	O	Ignition coil (ignition power transistor)	M
Air-conditioning switch	G	Ignition timing adjusting terminal	Q
Camshaft position sensor	AA	Injector	K
Check engine/malfunction indicator lamp	P	Knock sensor	T
Crankshaft position sensor	D	Multiport fuel injection (MFI) relay	N
Diagnostic output terminal and diagnostic test mode control terminal	R	Park/Neutral position switch <A/T>	I
EGR solenoid	Z	Power steering pressure switch	H
EGR temperature sensor	Y	Resistor <Turbo>	W
Engine control module	S	Throttle position sensor (with built-in closed throttle position switch)	C
Engine coolant temperature sensor	B	Turbocharger waste gate solenoid <Turbo>	U
Evaporative emission purge solenoid	X	Variable induction control motor (DC motor) (with built-in induction control valve position sensor) <Non Turbo>	J
Fuel pressure solenoid <Turbo>	V	Vehicle speed sensor (reed switch)	F
Heated oxygen sensor	E	Volume air flow sensor (with built-in intake air temperature sensor and barometric pressure sensor)	A
Idle air control motor (stepper motor)	L		

NOTE
The "Name" column is in alphabetical order.

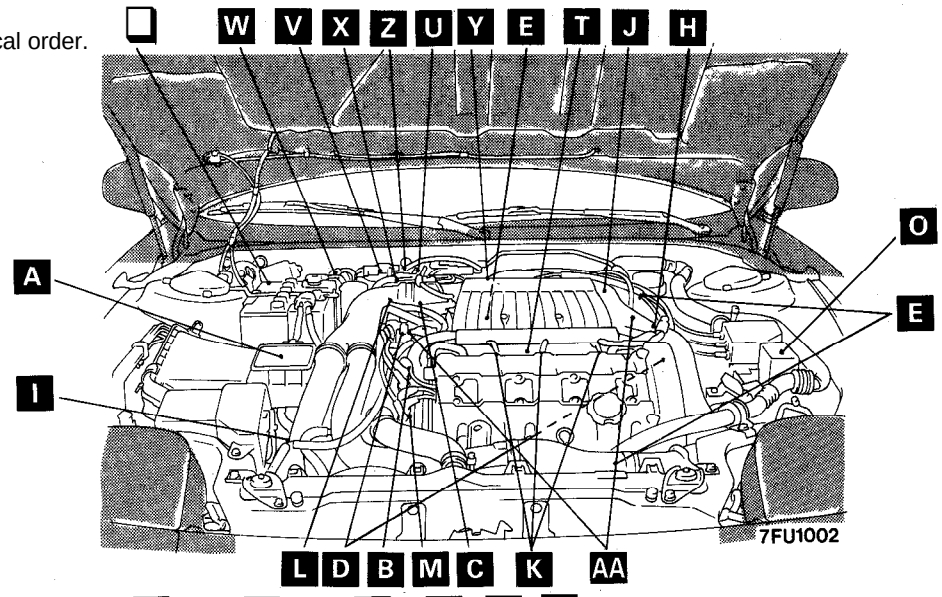

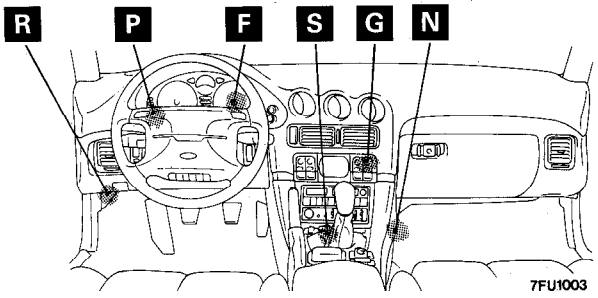

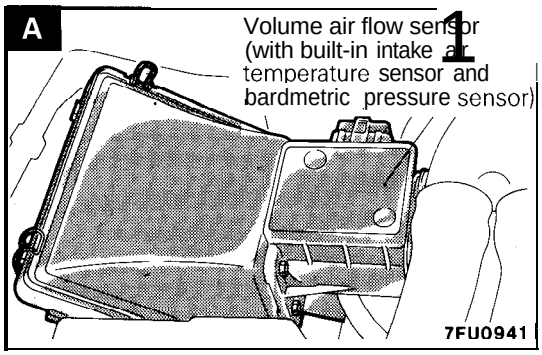
A
Volume air flow sensor
(with built-in intake air temperature sensor and barometric pressure sensor)
7FU0941

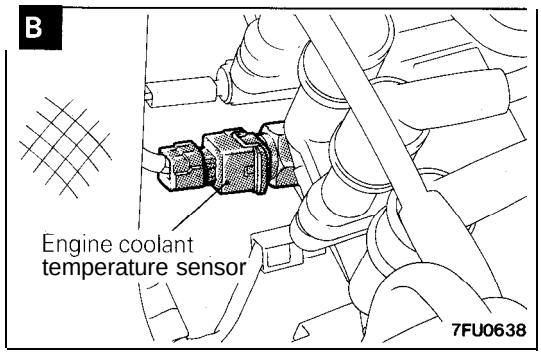
B
Engine coolant temperature sensor
7FU0638

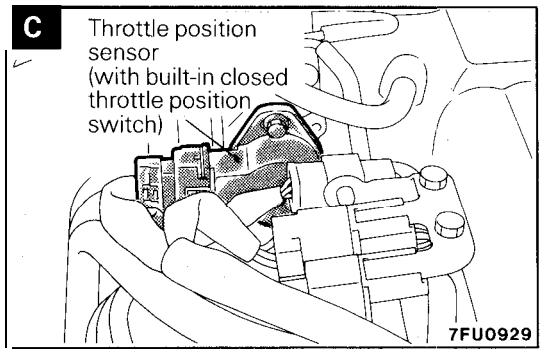
C
Throttle position sensor
(with built-in closed throttle position switch)
7FU0929

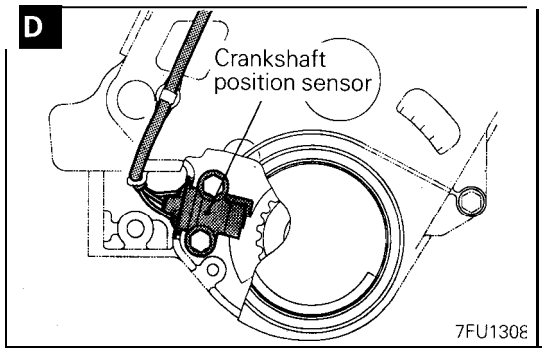
D
Crankshaft position sensor
7FU1308

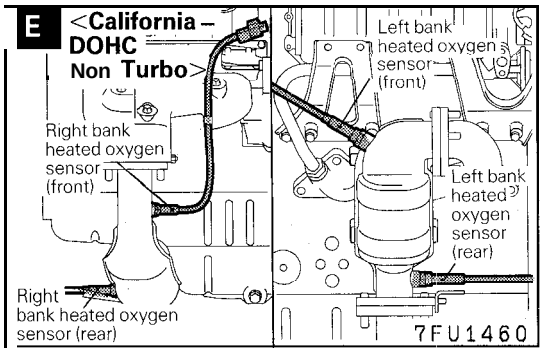
E
<California – DOHC Non Turbo>
Right bank heated oxygen sensor (front)
Right bank heated oxygen sensor (rear)
Left bank heated oxygen sensor (front)
Left bank heated oxygen sensor (rear)
7FU1460

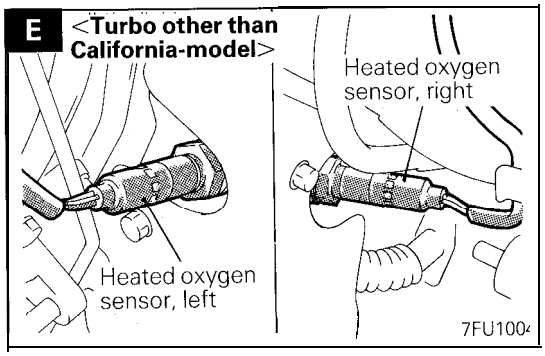
E
<Turbo other than California-model>
Heated oxygen sensor, left
Heated oxygen sensor, right
7FU1004

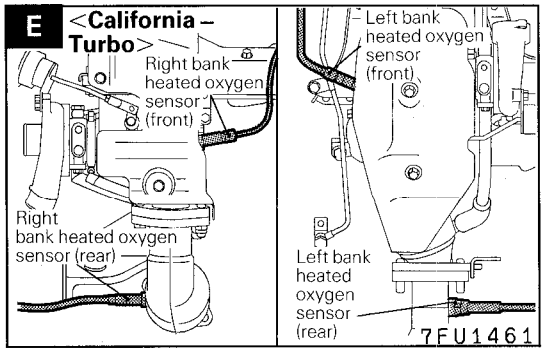
E
<California – Turbo>
Right bank heated oxygen sensor (front)
Right bank heated oxygen sensor (rear)
Left bank heated oxygen sensor (front)
Left bank heated oxygen sensor (rear)
7FU1461

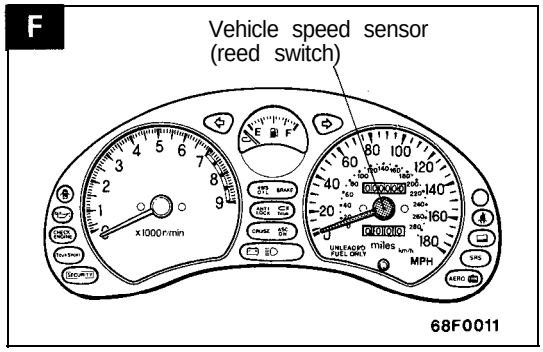
F
Vehicle speed sensor (reed switch)
x1000r/min
MPH
68F0011

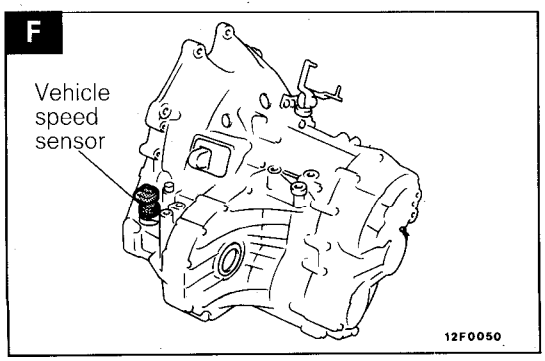
F
Vehicle speed sensor
12F0050

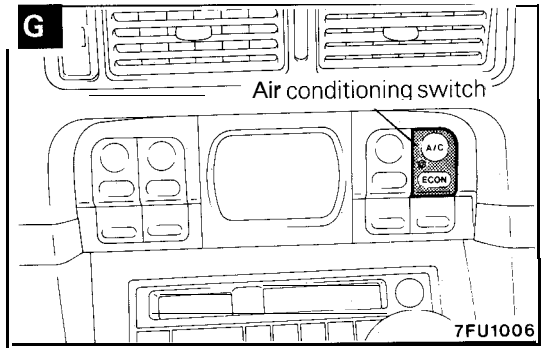
G
Air conditioning switch
A/C
ECON
7FU1006

H

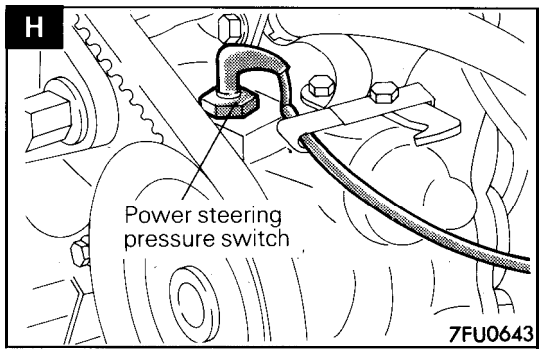

I

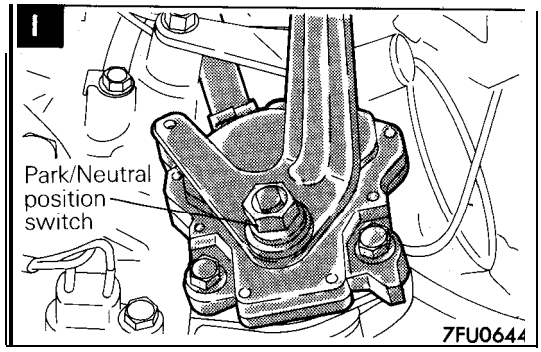

J <Non Turbo>

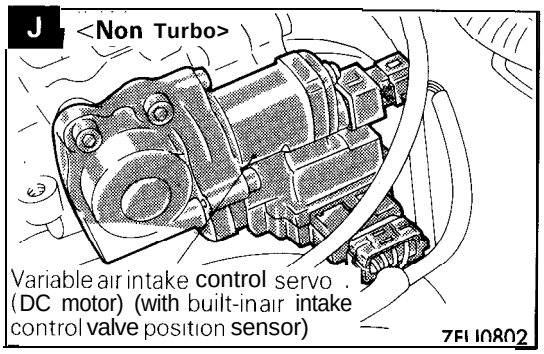

K

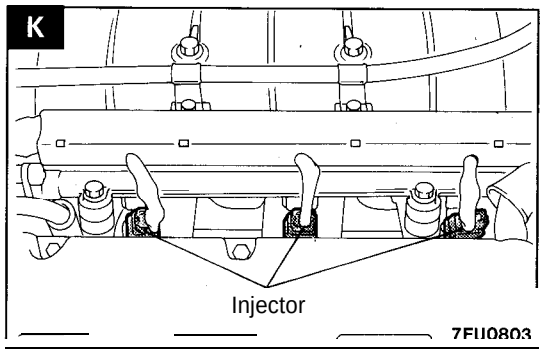

L

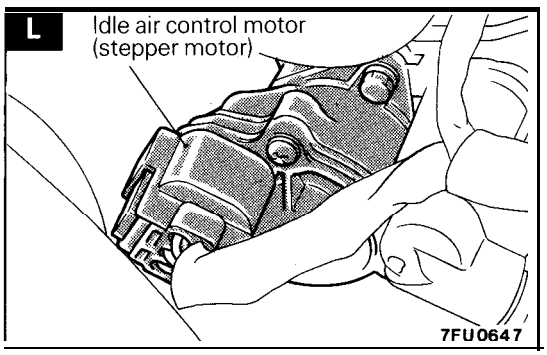

M

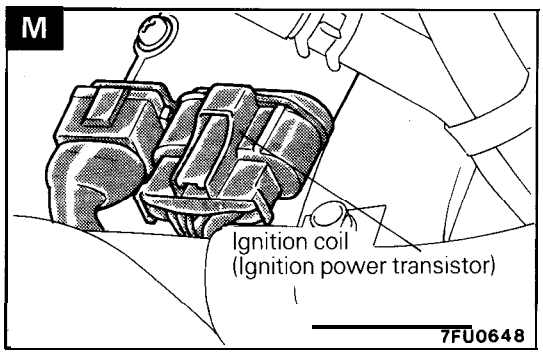

N

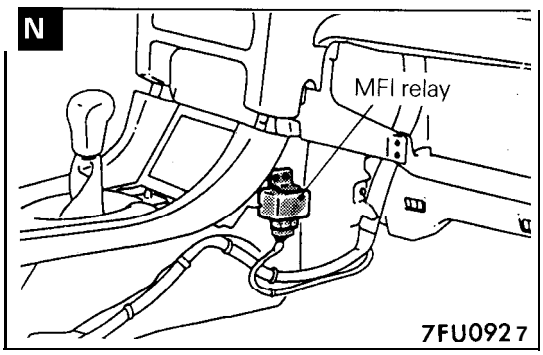

O

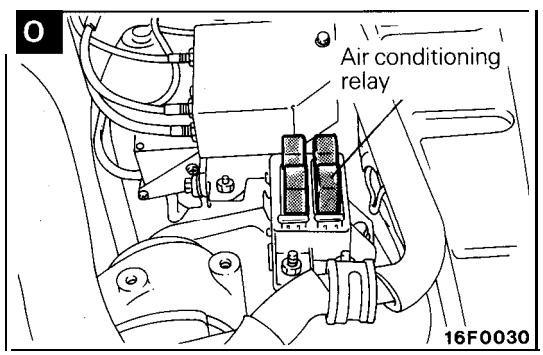

P

Check engine/malfunction indicator lamp

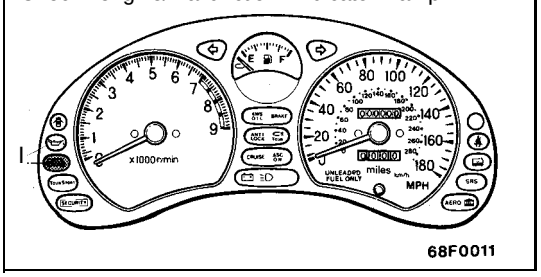

Q

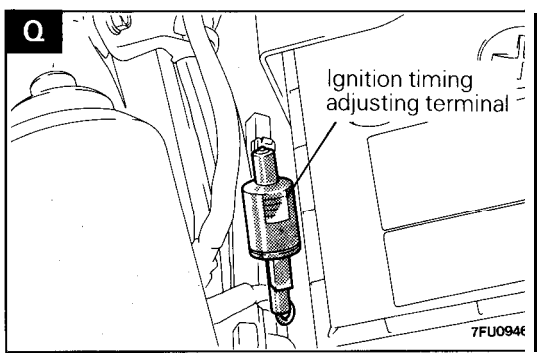

R

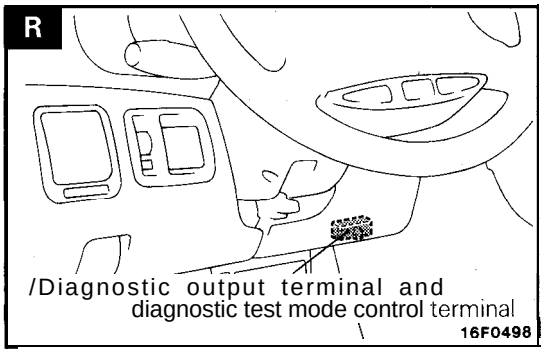

S

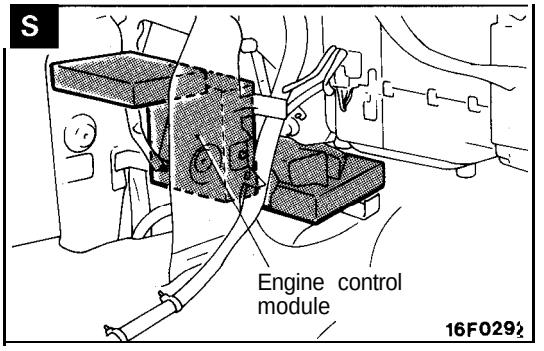

T

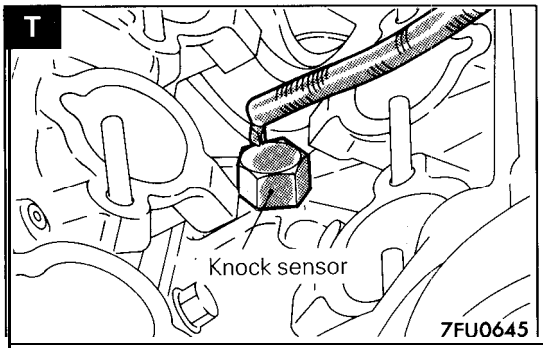

U <Turbo>

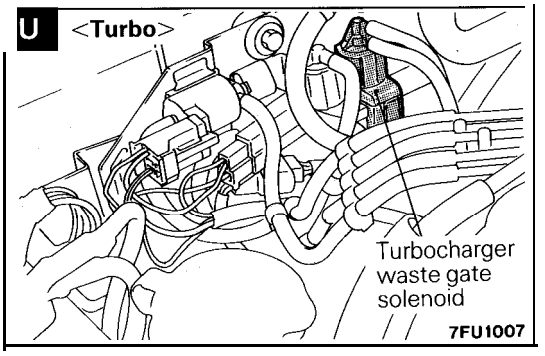

V <Turbo>

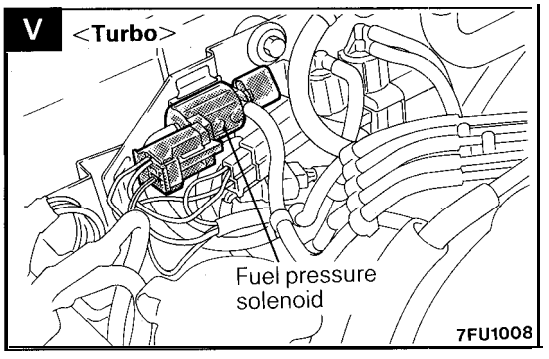

W <Turbo>

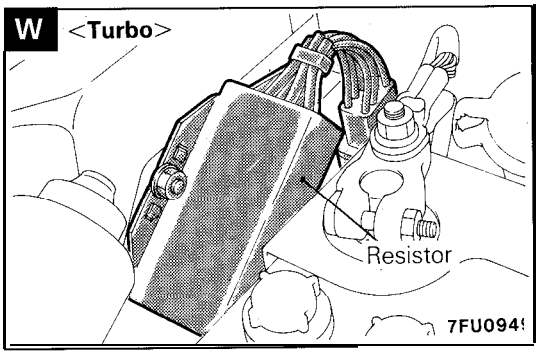

X

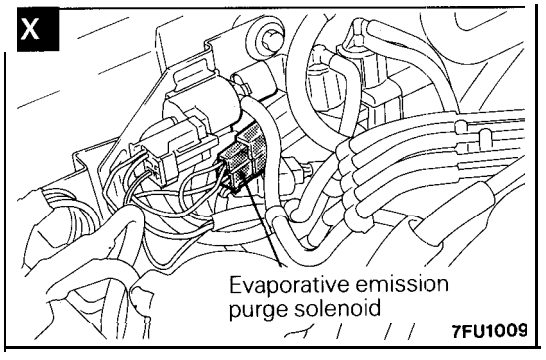

Y

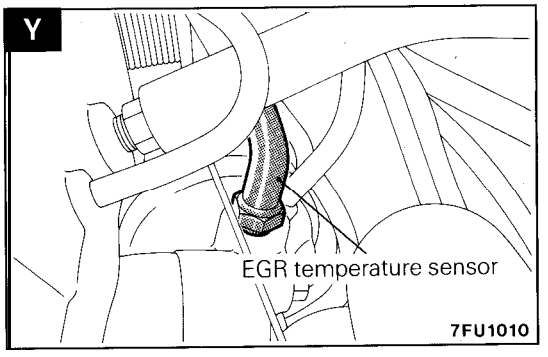

Z

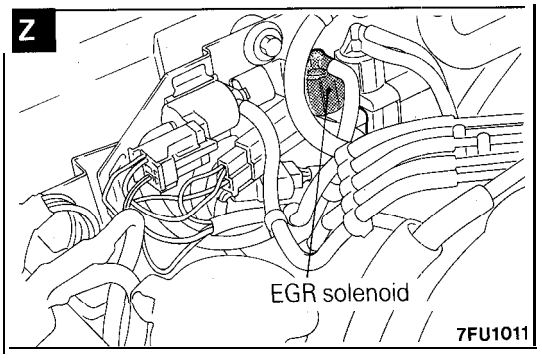

AA

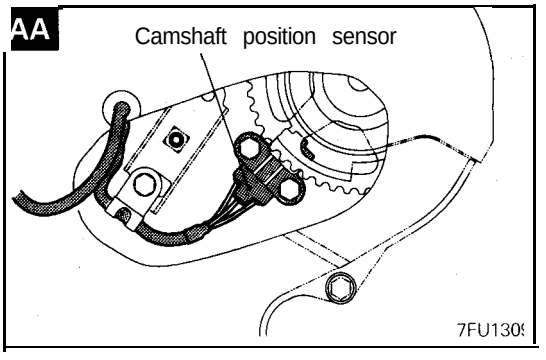

COMPONENTS INSPECTION PROCEDURE

USING SCAN TOOL

. Refer to P.14A-76.

POWER SUPPLY (MFI RELAY) AND IGNITION SWITCH-IG

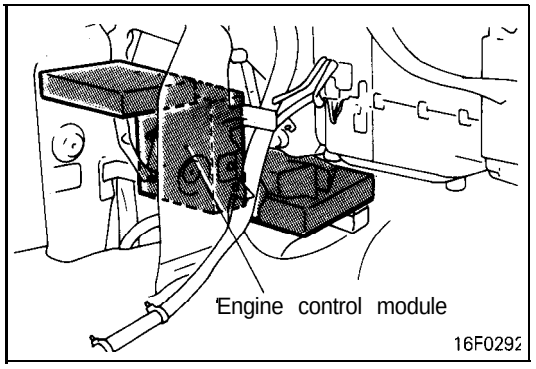

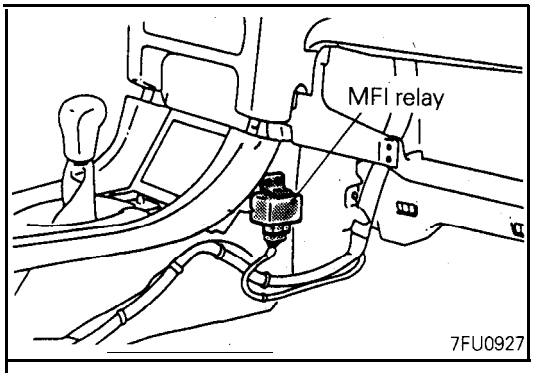

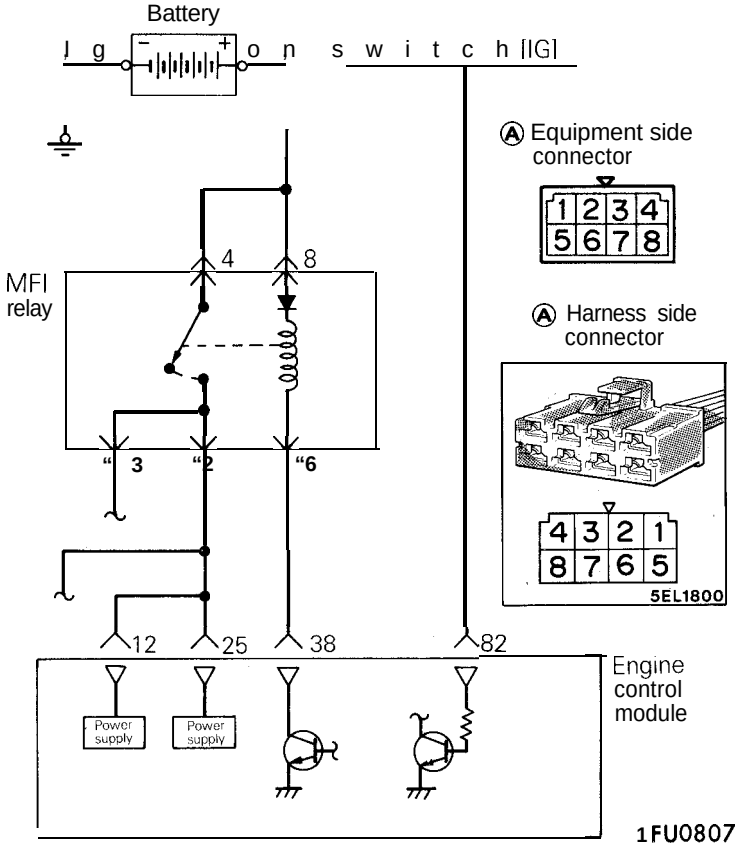

Engine control module connector

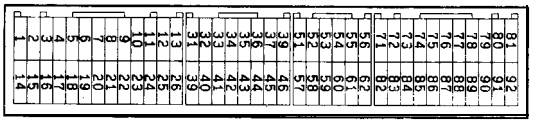

9FU0393

OPERATION

Refer to P.14A-77.

INSPECTION

Refer to P.14A-77.

HARNESS INSPECTION

1

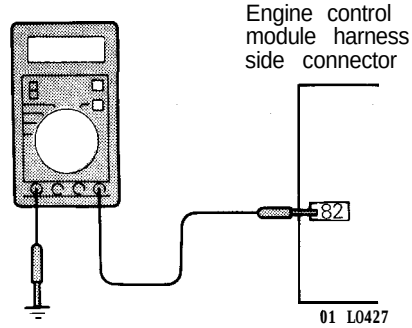

Measure the ignition switch (IG) terminal input voltage.

- Engine control module connector: Disconnected

Ignition switch	Voltage (V)
OFF	0 – 1
ON	B+

OK → 2

NG → Repair the harness. (Ignition switch – 82) or check the ignition switch

2

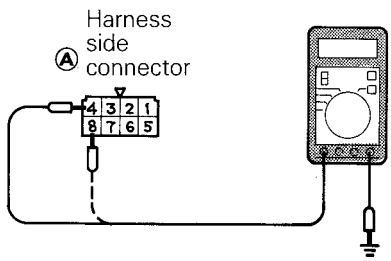

Measure the power supply voltage of the MFI relay.

- Ignition switch: OFF
- MFI relay connector: Disconnected

Voltage (V)
B+

OK → 3

NG → Repair the harness. (Battery – A4, A8)

3

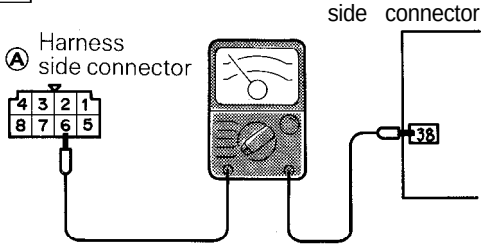

Check for an open-circuit, or a short-circuit to ground, between the engine control module and the MFI relay.

- Engine control module connector: Disconnected
- MFI relay connector: Disconnected

OK → 4

NG → Repair the harness. (A6 - [illegible])

4

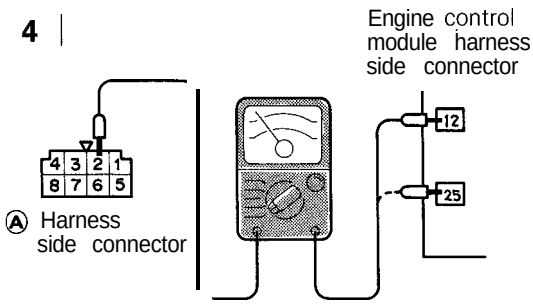

Check for an open-circuit, or a short-circuit to earth between the engine control module and the MFI relay.

- MFI relay connector: Disconnected
- Engine control module connector: Disconnected

OK → 5

NG → Repair the harness. (A2 – 12, [illegible])

5	Measure power voltage to the actuator. • MFI relay connector: Connected • Engine control module connector: Connected	OK →	STOP Replace the MFI relay or defective engine control module

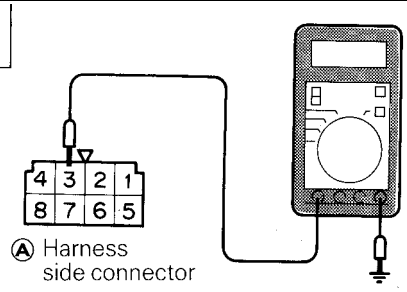

Engine	Voltage (V)
Cranking	8V or higher
Racing	B+

OK → STOP Replace the MFI relay or defective engine control module

MFI RELAY INSPECTION

Refer to P.14A-79

ENGINE CONTROL MODULE POWER GROUND

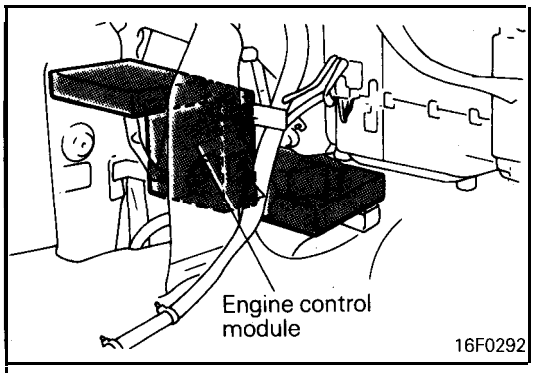

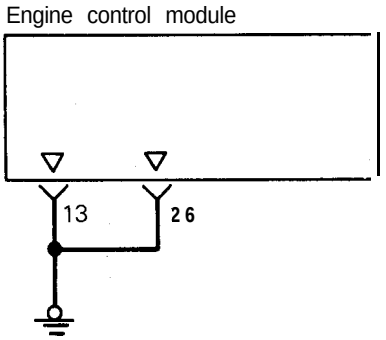

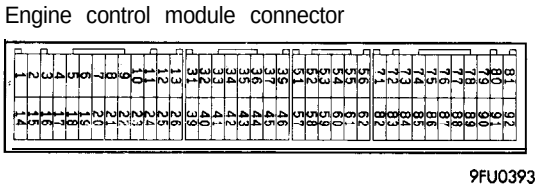

OPERATION

Refer to 14A-80.

TROUBLESHOOTING HINTS

Refer to 14A-80.

HARNESS INSPECTION

Refer to 14A-80.

FUEL PUMP <Non Turbo>

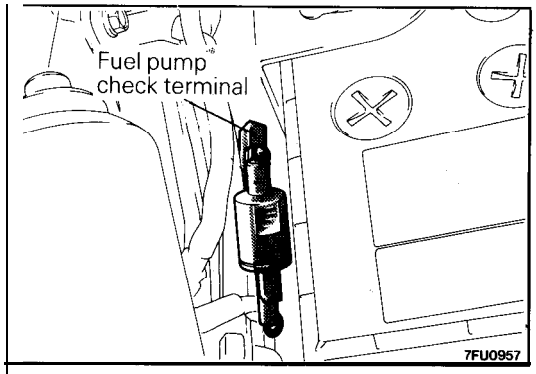

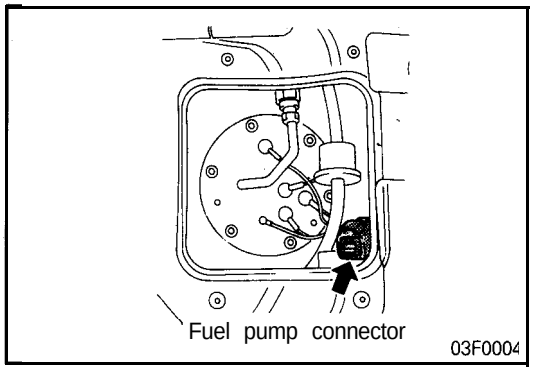

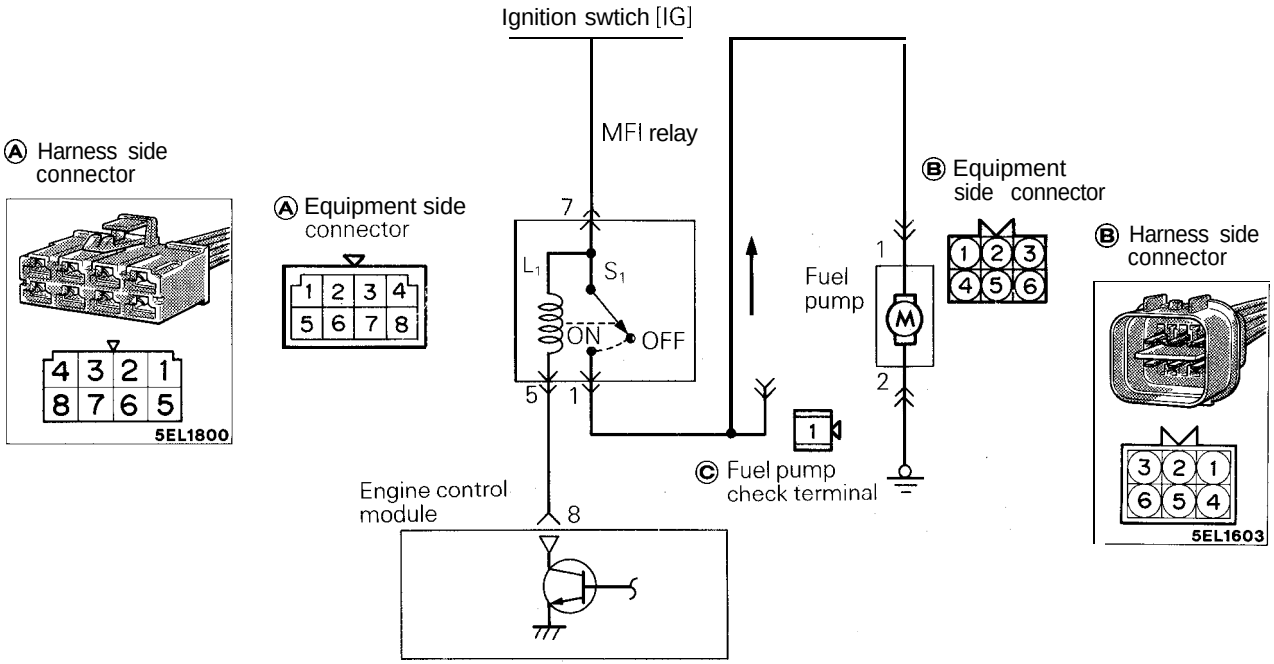

Engine control module connector

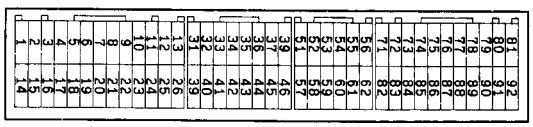

7FU1360

OPERATION

Refer to 14A-81.

INSPECTION

Refer to 14A-82.

HARNESS INSPECTION

Refer to 14A-82.

MFI RELAY INSPECTION

Refer to 14A-79.

FUEL PUMP <Turbo>

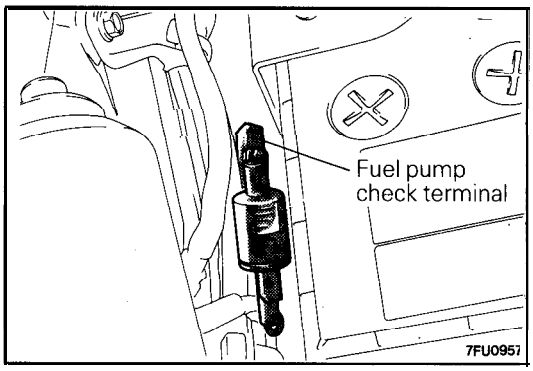

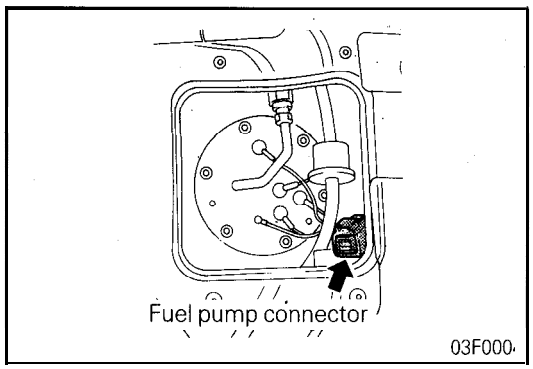

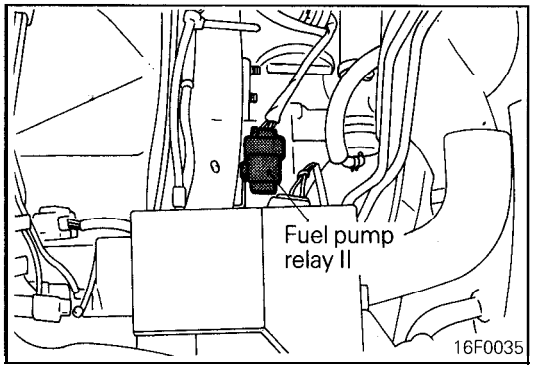

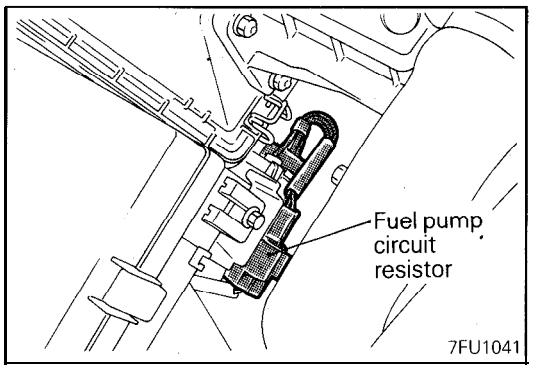

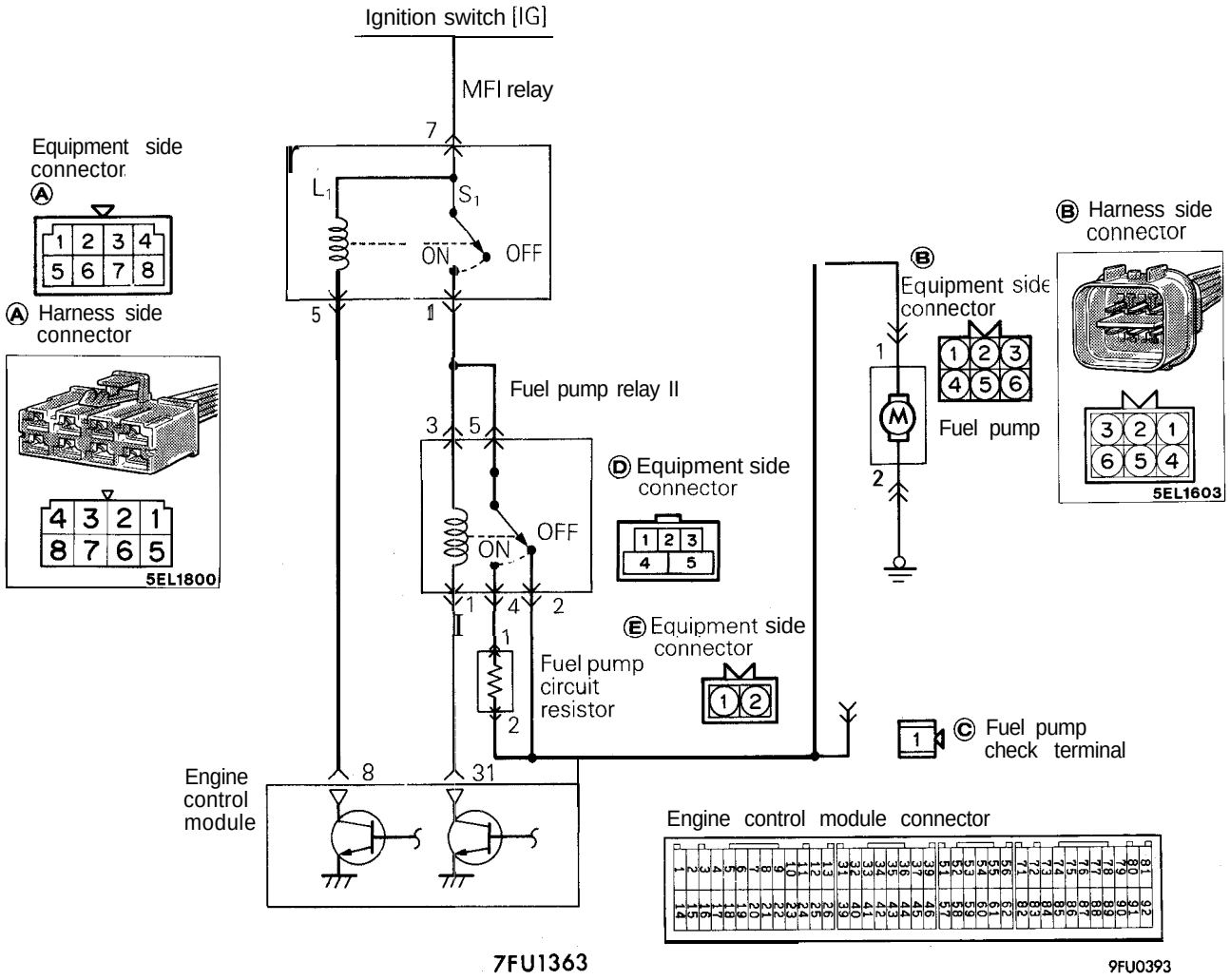

OPERATION

Refer to 14A-81.

INSPECTION

Refer to 14A-82.

HARNESS INSPECTION

1 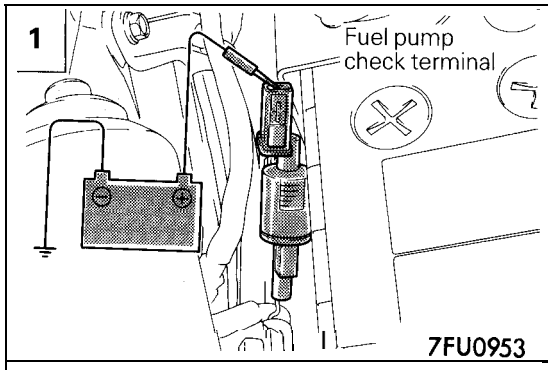	Check the fuel pump. • Apply battery voltage to the checking terminal and operate the pump.	OK →	4
		OK →	2
2 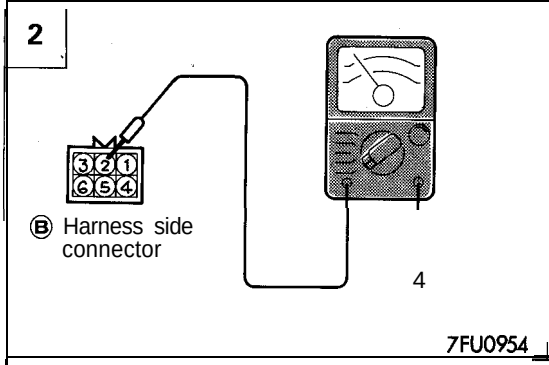	Check the ground circuit of the fuel pump. • Fuel pump connector: Disconnected	OK →	3
		OK →	Repair the harness. (Ⓑ2 – Ground)
3 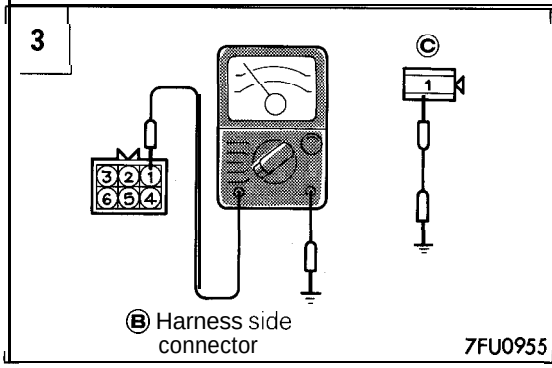	Check for continuity between the fuel pump and the checking terminal. • Fuel pump connector: Disconnected	OK →	4
		OK →	Repair the harness. (Ⓑ1 – Ⓒ1)
4 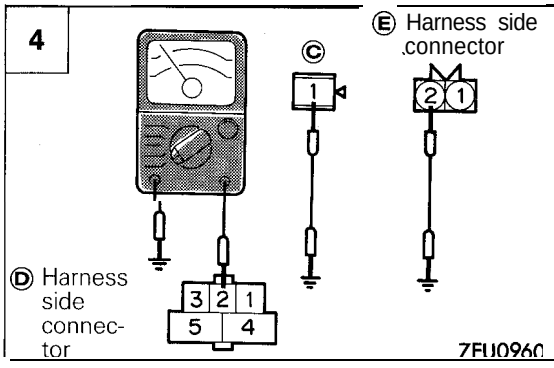	Check for continuity between the checking terminal and the fuel pump relay II, and between the resistor (for fuel pump). • Fuel pump relay II connector: Disconnected • Resistor (for fuel pump) connector: Disconnected • Fuel pump connector: Disconnected	OK →	5
		OK →	Repair the *harness. (Ⓒ1 – Ⓓ2) (Ⓓ2 – Ⓔ2)

5

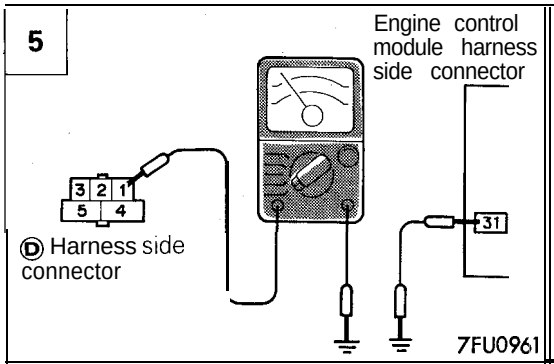

Check for an open-circuit, or a short-circuit to ground, between the fuel pump relay II and the engine control module.

- Fuel pump relay II connector: Disconnected
- Engine control module connector: Disconnected

OK → 6

NG → Repair the harness. (Ⓓ1 – 31)

6

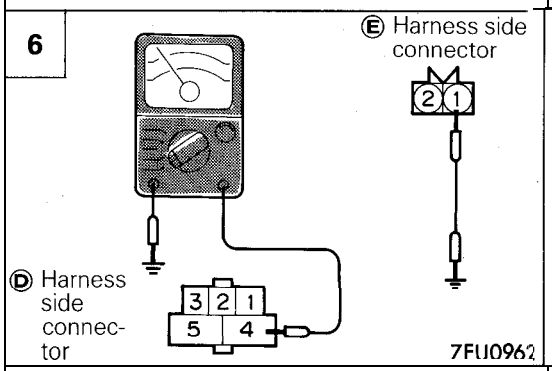

Check for continuitv between the fuel pump relay II and the resistor (for fuel pump).

- Fuel pump relay II connector: Disconnected
- Resistor (for fuel pump) connector: Disconnected

OK → 7

NG → Repair the harness. (Ⓓ4 – Ⓔ1)

7

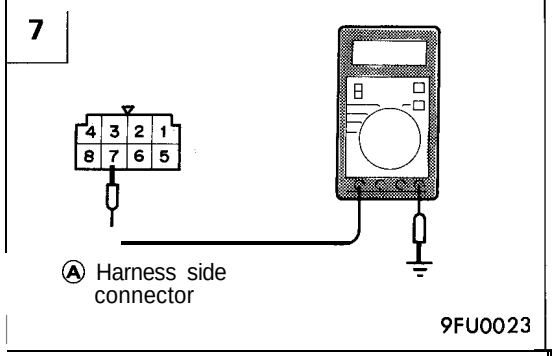

Measure the power supply voltage of the MFI relay.

- MFI relay connector: Disconnected

Ignition switch	Voltage (V)
OFF	0
ON	B+

OK → 8

NG → Repair the harness. (Ignition switch [IG] – Ⓐ3) (Ignition switch [ST] – Ⓐ9)

8

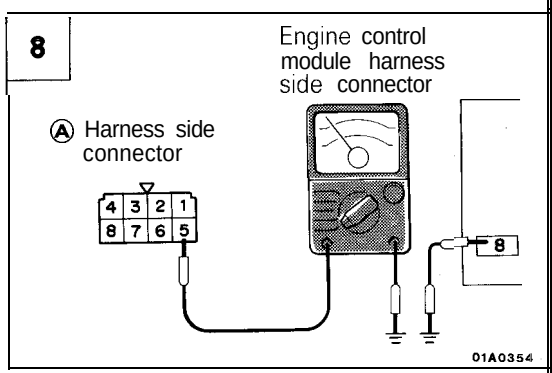

Check for an open-circuit, or a short-circuit to ground, between the MFI relay and the engine control module.

- MFI relay connector: Disconnected
- Engine control module connector: Disconnected

OK → 9

NG → Repair the harness. (Ⓐ5 – ☐)

9

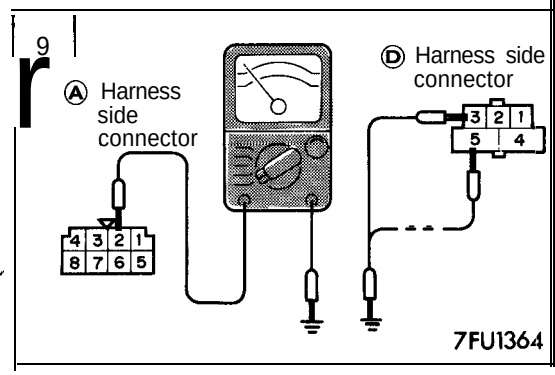

Check for continuity between the MFI relay and the fuel pump relay II.

- MFI relay connector: Disconnected
- Fuel pump relay II connector: Disconnected

OK → 10

NG → Repair the harness. (Ⓐ☐ – Ⓓ☐) (Ⓐ☐ – Ⓓ☐)

10 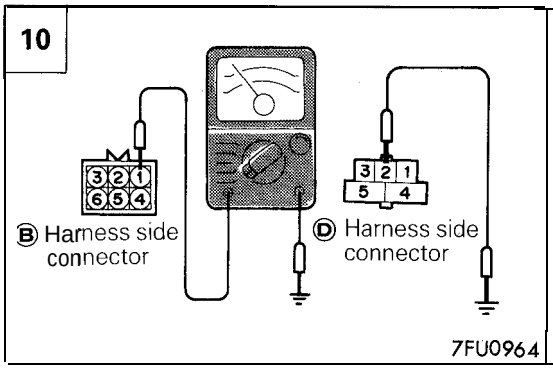	Check for an open-circuit, or a short-circuit to ground, between the fuel pump relay II and the fuel pump. • Fuel pump relay II connector: Disconnected • Fuel pump connector: Disconnected	OK →	STOP
		NG →	Repair the harness. (Ⓑ1 – Ⓓ2)

MFI RELAY INSPECTION

Refer to P.14A-79.

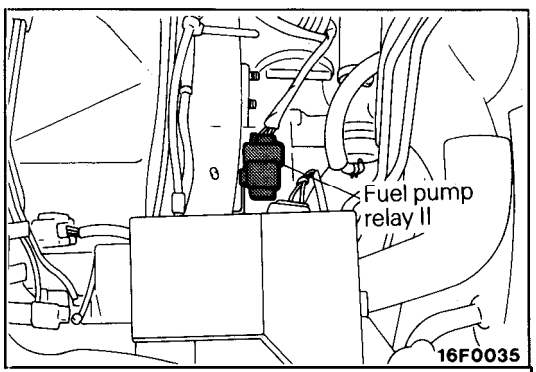

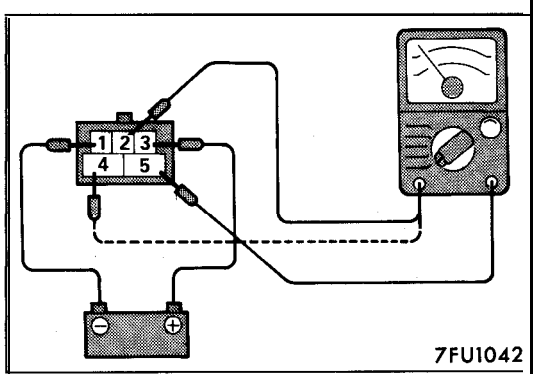

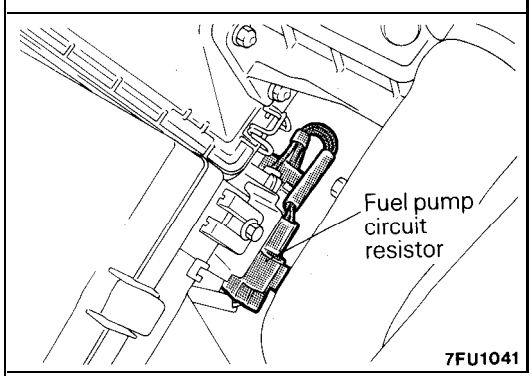

FUEL PUMP RELAY II

INSPECTION

(1) Remove fuel pump relay II.

(2) Use a jumper wire to connect terminal ③ of fuel pump relay II and the positive terminal of the battery and use another jumper wire to connect terminal ① and the negative terminal of the battery.

(3) With the jumper wire connected to and disconnected from the negative terminal of the battery, check the continuity between terminals ② and ⑤ of fuel pump relay II and between terminals ④ and ⑤ of fuel pump relay II.

Jumper wire	Continuity between terminals 2 and 5	Continuity between terminals 4 and 5
Connected	No continuity	Continuity present
Disconnected	Continuity present	No continuity

(4) Replace fuel pump relay II if it is faulty.

FUEL PUMP CIRCUIT RESISTOR

INSPECTION

(1) Disconnect the connectors for the fuel pump circuit resistor.

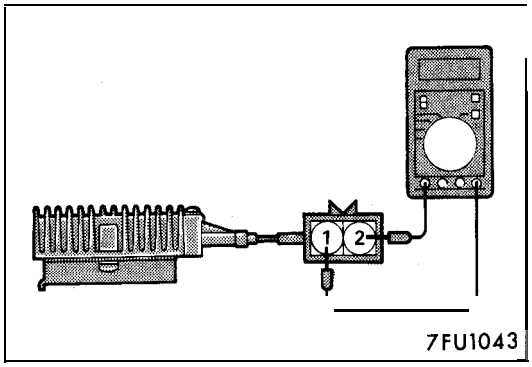

(2) Measure the resistance between the terminals.

Standard value: 0.6 – 0.9 Ω

(3) If the resistance deviates from the standard value, replace the fuel pump circuit resistor.

VOLUME AIR FLOW SENSOR

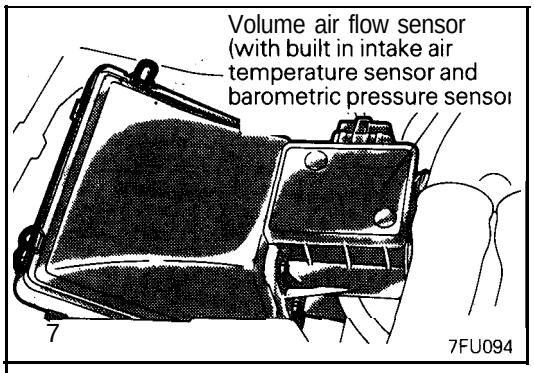

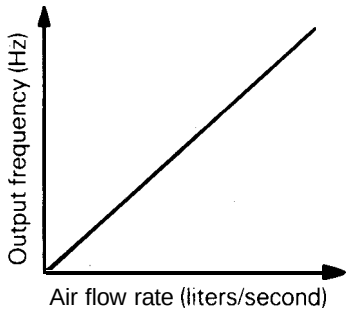

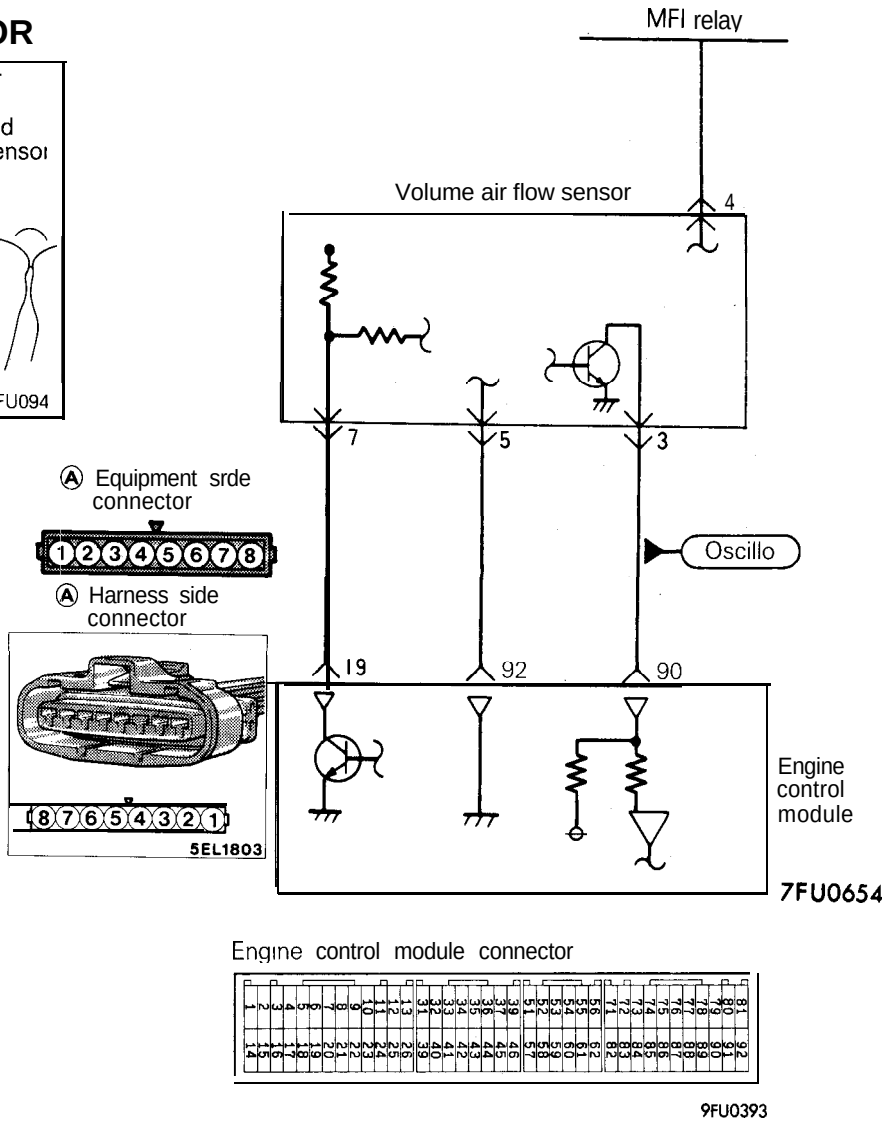

OPERATION

Refer to P.14A-84.

TROUBLESHOOTING HINTS

Refer to P.14A-84.

INSPECTION

Using Scan Tool

<Volume Air Flow Sensor>

Function	Item No.	Data display	Check condition	Engine state	Standard value
Data reading	12	Sensor air volume [frequency)	• Engine coolant temperature: 80 to 95°C (176 to 205°F) • Lights and accessories: OFF • Transaxle: Neutral (P range for vehicle with A/T) • Steering wheel: Neutral	700 rpm (Idle)	22-48 Hz
				2,000 rpm	50 – 90 <Non turbo> 68 – 108 <Turbo>
				Racing	Frequency increases with racing

NOTE
When the vehicle is new [within initial operation of about 500 km (300 miles)], the volume air flow sensor output frequency may be about 10% higher.

<Volume Air Flow Sensor Reset Signal>

Function	Item No.	Data display	Check conditions	Engine conditions	Standard value
Data list	34	Reset signal condition	• Engine warm up	700 rpm (Idle)	ON
				2,000 rpm	OFF

<Volumetric Efficiency>

Function	Item No.	Data display	Check condition	Engine state	Standard value
Data list	37	Volumetric efficiency	• Engine coolant temperature: 80 to 95°C (176 to 205°F) • Lights, electric cooling fan and accessory operation: OFF • Transaxle: Neutral (P range for vehicle with A/T) • Steering wheel: Neutral	700 rpm (Idle)	15-35 %
				2,000 rpm	15-35 %
				Racing	Frequency increases with racing

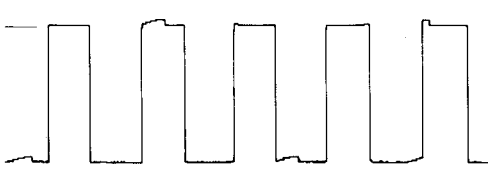

Regular waveform

03A02(

Using Oscilloscope

(1) Run the engine at idle speed.
(2) Connect the probe to the oscilloscope pick-up point as shown in the circuit diagram, and check the waveform.

HARNESS INSPECTION

1

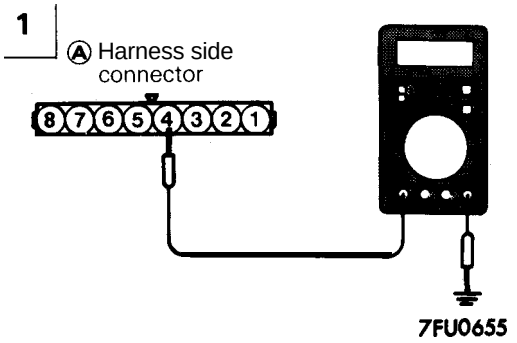

Measure the power supply voltage.
- Connector: Disconnected
- Ignition switch: ON

Voltage (V)
B+

OK → 2

NG → Repair the harness (Ⓐ 4 – Control relay) or check the control relay.

2

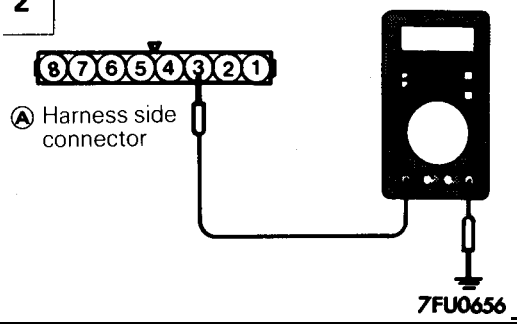

Measure the terminal voltage.
- Connector: Disconnected
- Ignition switch: ON

Voltage (V)
4.8 – 5.2

OK → 3

NG → Repair the harness (Ⓐ 3 – 90)

3

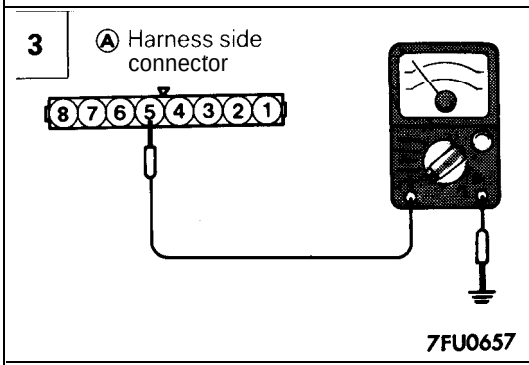

Check for continuity of the ground circuit.
- Connector: Disconnected

OK → STOP

NG → Repair the harness. (Ⓐ 5 – 92)

4

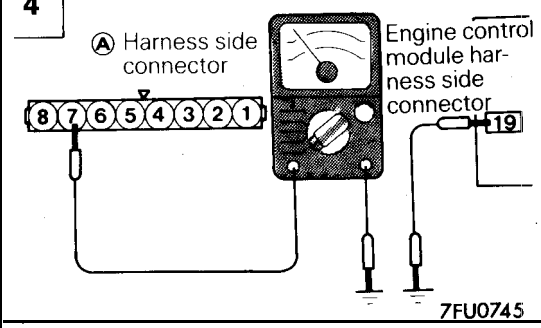

Check for continuity between the volume air flow sensor and the engine control unit.
- Volume air flow sensor connector: Disconnected
- Engine control module connector: Disconnected

OK → STOP

NG → Repair the harness. (Ⓐ 7 – ❑)

INTAKE AIR TEMPERATURE SENSOR

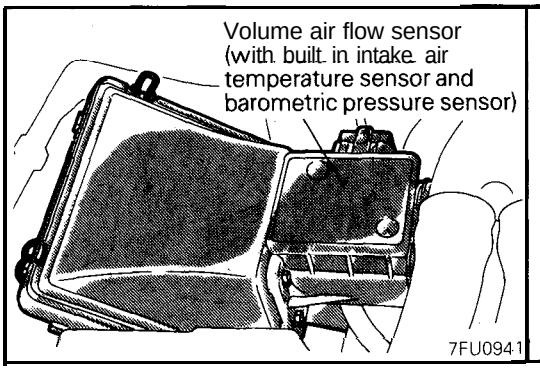

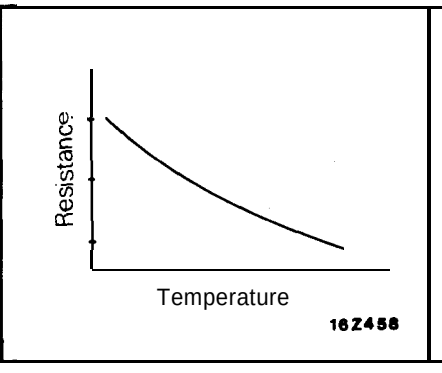

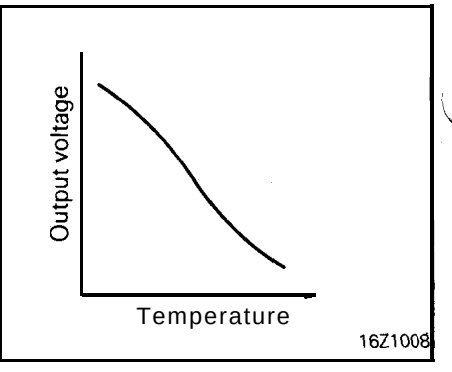

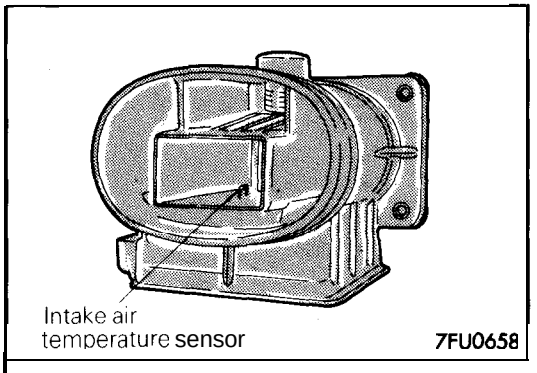

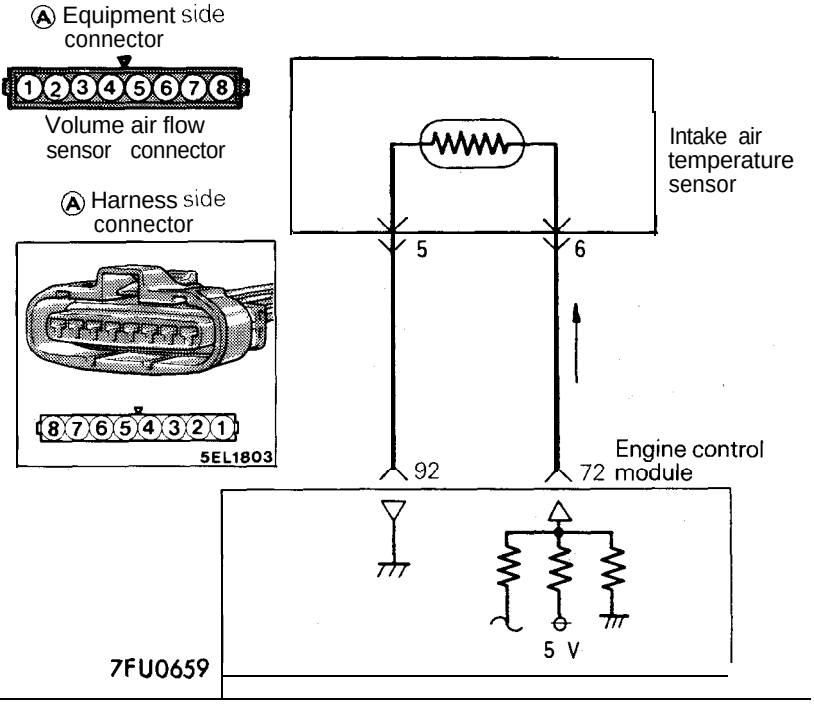

OPERATION

Refer to P.14A-87.

TROUBLESHOOTING HINTS

Refer to P.14A-87.

INSPECTION

Refer to P.14A-88.

HARNESS INSPECTION

1 Ⓐ Harness side connector 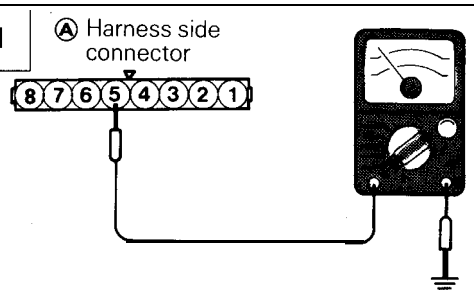 7FU0657	Check for continuity of the ground circuit. • Connector: Disconnected	OK →	2
		NG →	Repair the harness. (Ⓐ 5 – 92)
2 Ⓐ Harness side connector 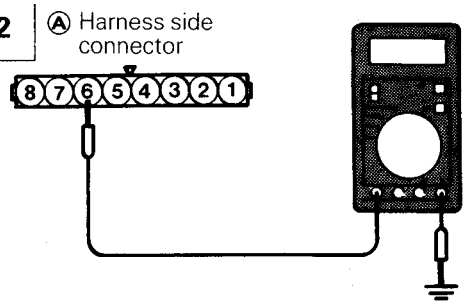 7FU0660	Measure the power supply voltage. • Connector: Disconnected • Ignition switch: ON Voltage (V): 4.5 – 4.9	OK →	STOP
		NG →	Repair the harness. (Ⓐ 6 – 72)

SENSOR INSPECTION

Refer to P.14A-88.

BAROMETRIC PRESSURE SENSOR

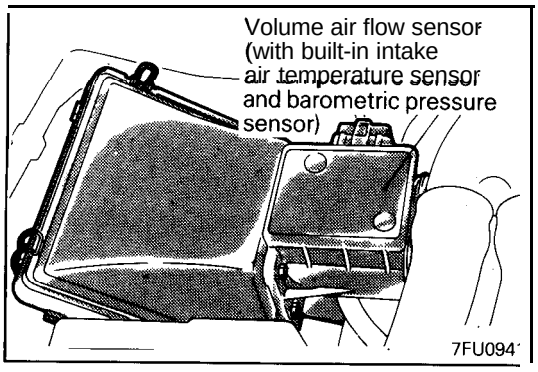

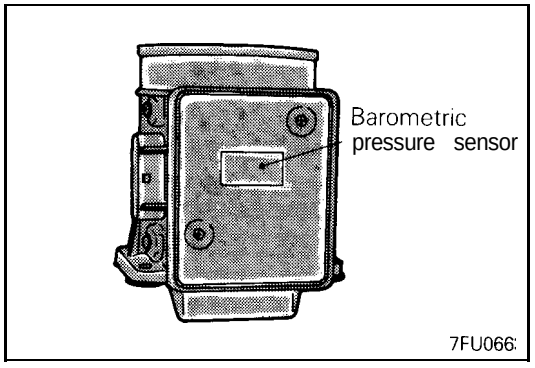

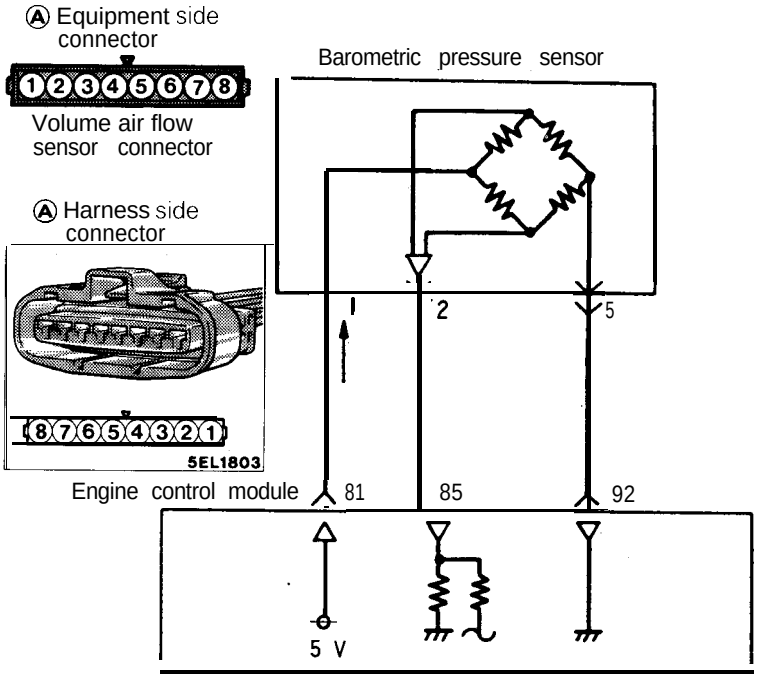

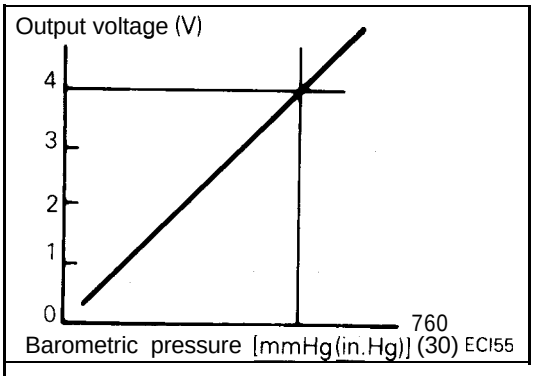

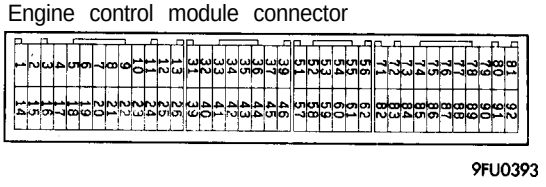

OPERATION

Refer to P.14A-90.

TROUBLESHOOTING HINTS

Refer to P.14A-91.

INSPECTION

Refer to P.14A-91.

HARNESS INSPECTION

1 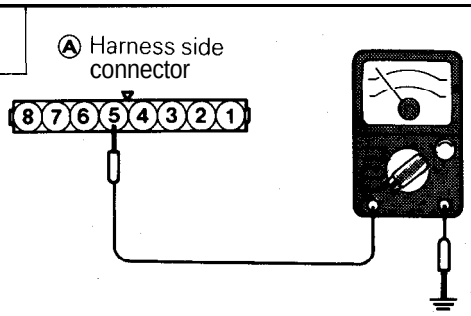 7FU0657	Check for continuity of the ground circuit. • Connector: Disconnected	OK →	2
		NG →	Repair the harness. (Ⓐ5 – ❑)
2 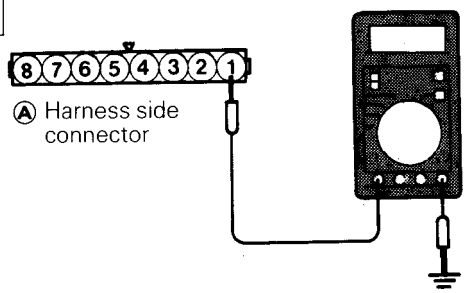 7FU066.5	Measure the power supply voltage of the barometric pressure sensor. • Connector: Disconnected • Ignition switch: ON Voltage (V): 4.8 – 5.2	OK →	3
		NG →	Repair the harness. (Ⓐ1 – 81)
3 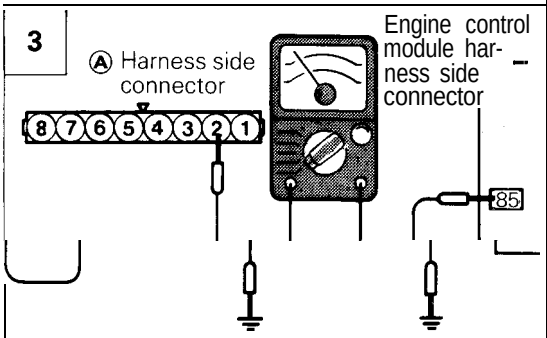 7FU0666	Check for an open-circuit, or a short-circuit to ground between the engine control module and the barometric pressure sensor. • Volume air flow sensor connector: Disconnected • Engine control module connector: Disconnected	OK →	A STOP
		NG →	Repair the harness. (Ⓐ2 – 85)

ENGINE COOLANT TEMPERATURE SENSOR

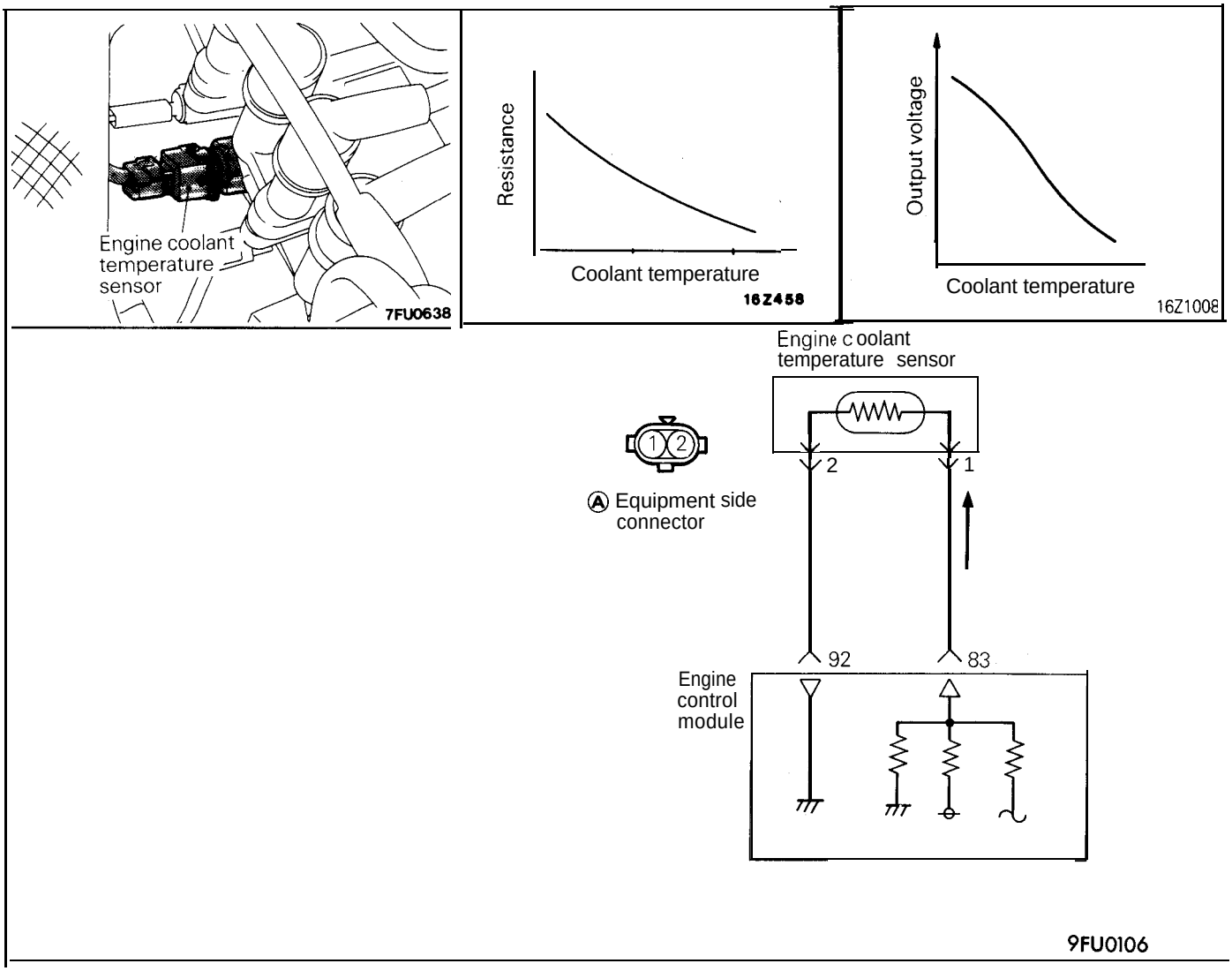

OPERATION

Refer to P.14A-92.

TROUBLESHOOTING HINTS

Refer to P.14A-92.

INSPECTION

Refer to P.14A-93.

HARNESS INSPECTION

1 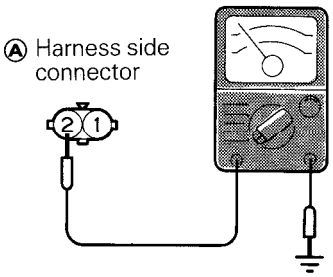	Check for continuity of the ground circuit. • Engine coolant temperature sensor connector: Disconnected	OK →	2
		NG →	Repair the harness. (Ⓐ2 – 92)
2 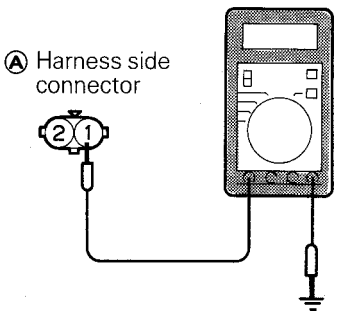	Measure the impressed voltage. • Engine coolant temperature sensor connector: Disconnected • Engine control module connector: Connected • Ignition switch: ON Voltage (V): 4.5 – 4.9	OK →	STOP
		NG →	Repair the harness. (Ⓐ1 - [redacted])

SENSOR INSPECTION

Refer to P.14A-94.

INSTALLATION

Refer to P.14A-94.

THROTTLE POSITION SENSOR

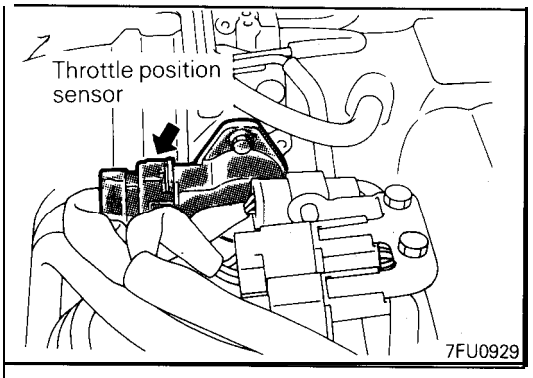

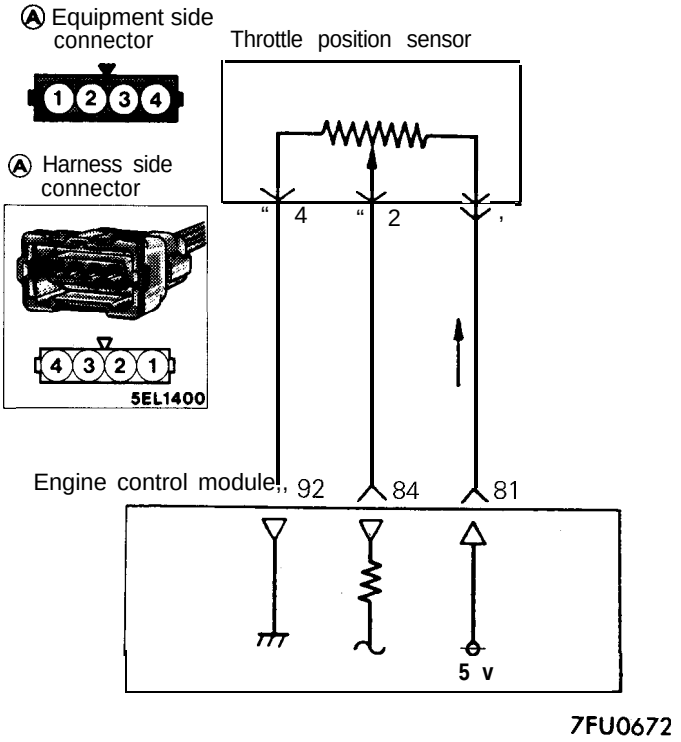

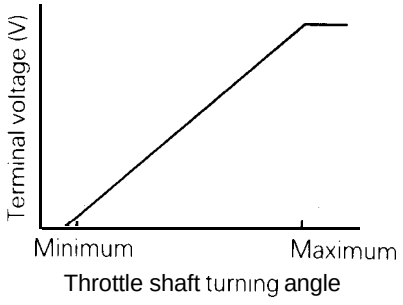

Engine control module connector

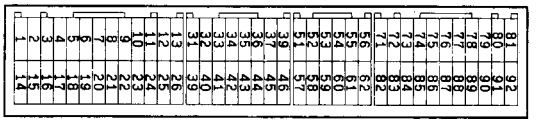

OPERATION

Refer to P.14A-95.

TROUBLESHOOTING HINTS

Refer to P.14A-95.

INSPECTION

Refer to P.14A-96.

HARNESS INSPECTION

1

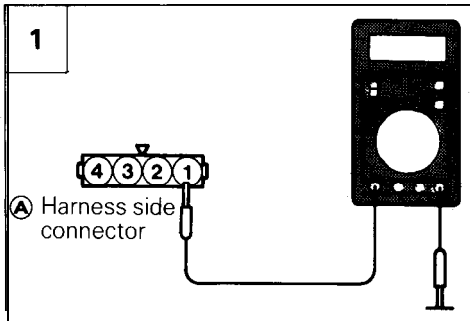

6FU1241

Measure the power supply voltage of the throttle position sensor.

- Connector: Disconnected
- Ignition switch: ON

Voltage (V)
4.8 – 5.2

OK → 2

NG → Repair the harness. (Ⓐ 1 – 81)

2

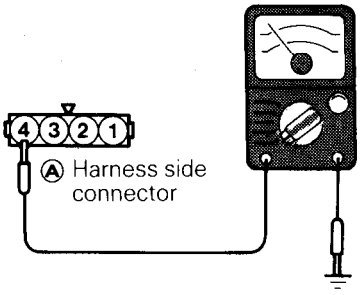

6FU1242

Check for continuity of the ground circuit.

- Connector: Disconnected

OK → 3

NG → Repair the harness. (Ⓐ 4 – 92)

3

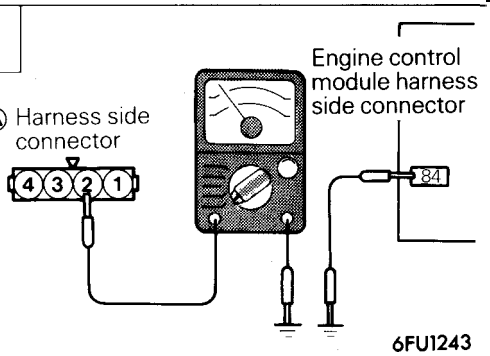

6FU1243

Check for an open-circuit, or a short-circuit to ground between the engine control module and the throttle position sensor.

- Throttle position sensor connector: Disconnected
- Engine control module connector: Disconnected
- Connector of any control module which uses TPS output signals like ECM: Disconnected

OK → STOP

NG → Repair the harness. (Ⓐ 2 – 84)

SENSOR INSPECTION

Refer to P.14A-97.

CLOSED THROTTLE POSITION SWITCH

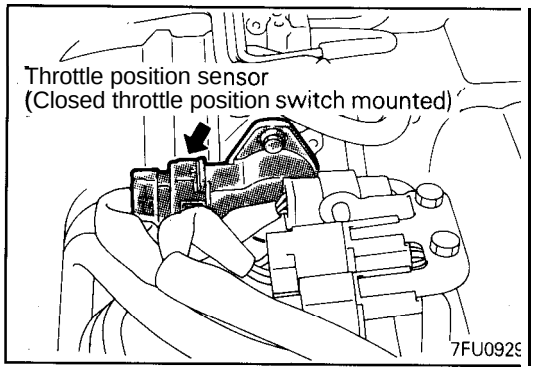

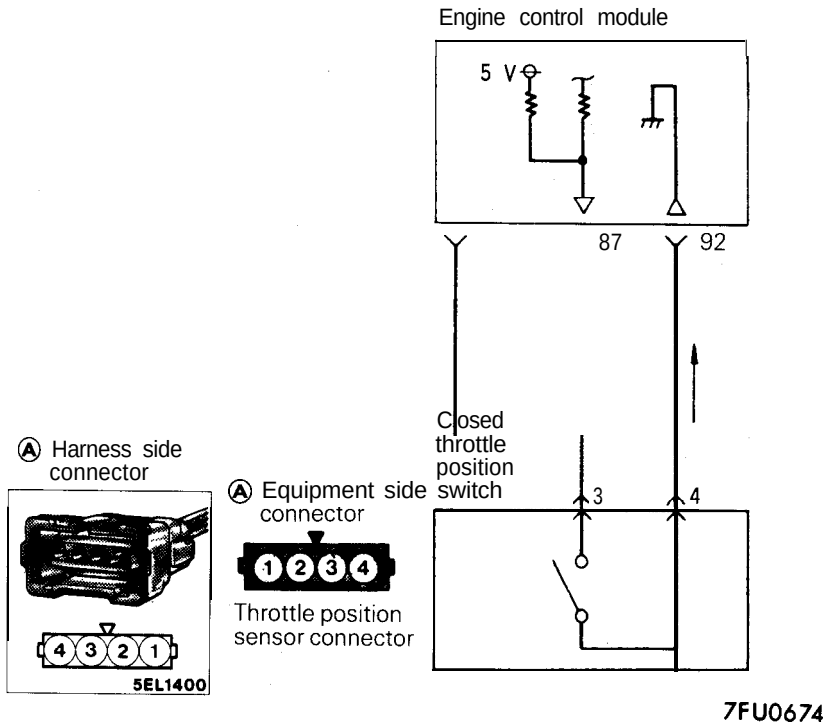

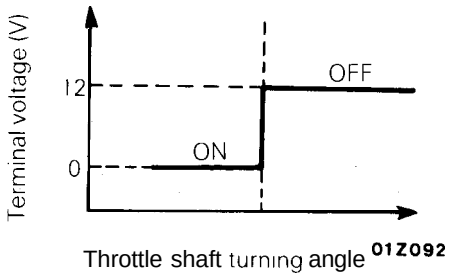

OPERATION

Refer to P.14A-98.

TROUBLESHOOTING HINTS

Refer to P.14A-98.

INSPECTION

Refer to P.14A-98.

HARNESS INSPECTION

1 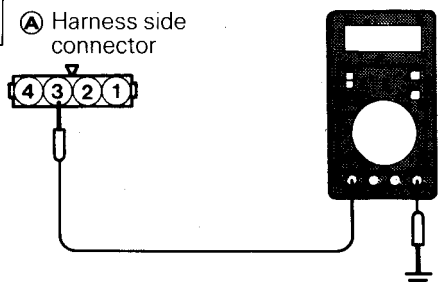	Measure the power supply voltage of the closed throttle position switch. • Connector: Disconnected • Ignition switch: ON Voltage (V): 4 or more	OK → 2 NG → Repair the harness. (Ⓐ3 – 87)	
2 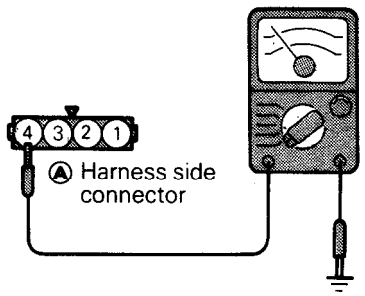	Check for continuity of the ground circuit. • Connector: Disconnected	OK → STOP NG → Repair the harness. (Ⓐ4 – 92)	

SENSOR INSPECTION

Refer to P.14A-99.

CAMSHAFT POSITION SENSOR

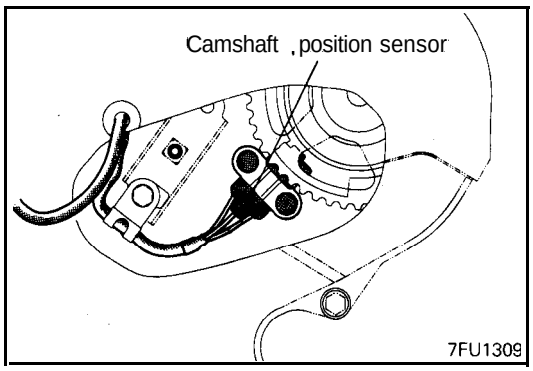

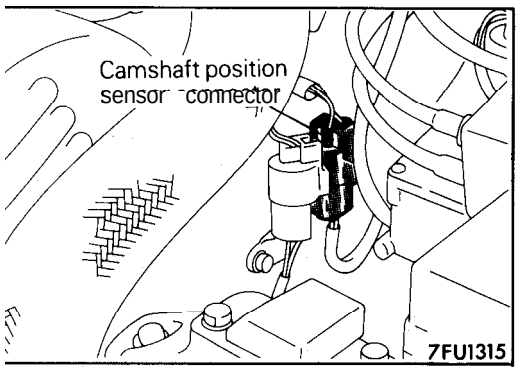

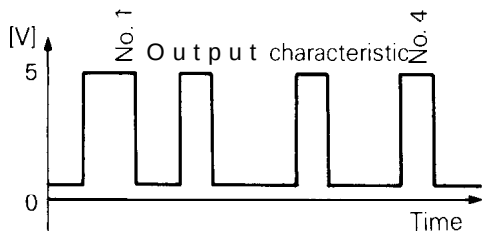

7FU0677

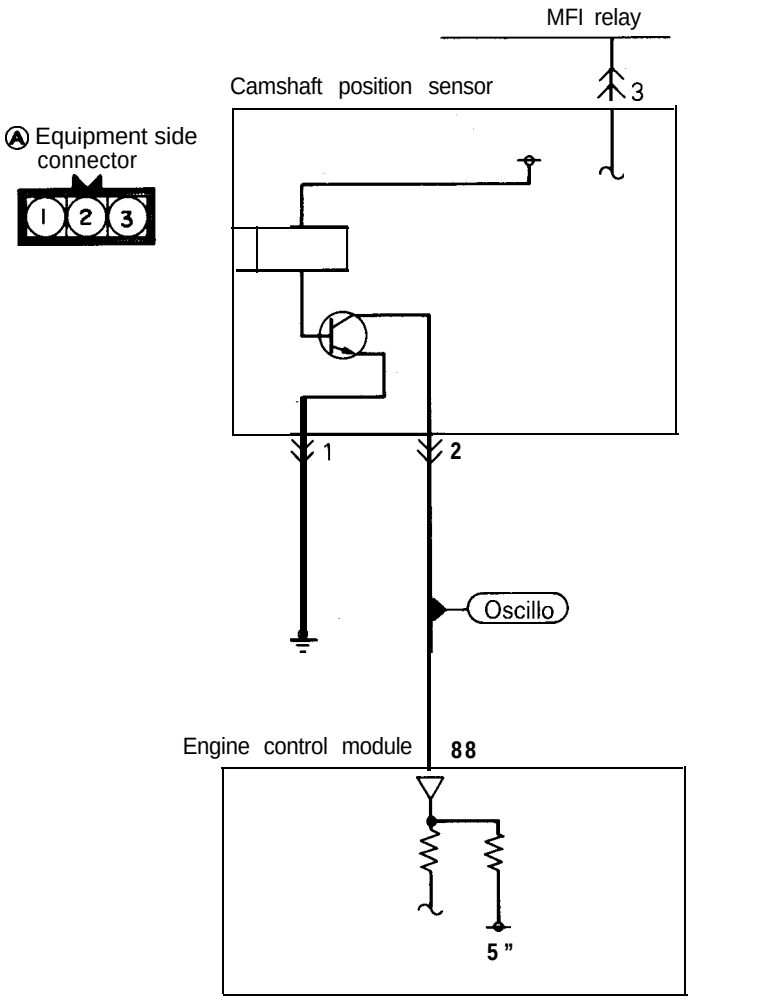

6AF0054

Engine control module connector

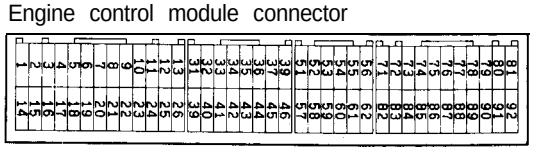

9FU0393

OPERATION

Refer to P.14A-100.

TROUBLESHOOTING HINTS

Refer to P.14A-100.

INSPECTION

Refer to P.14A-101

HARNESS INSPECTION

1

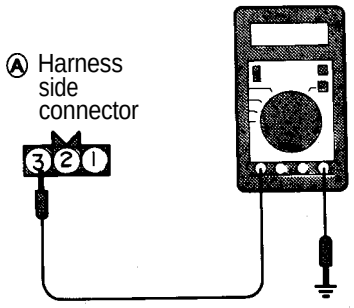

7FU1330

Measure the power supply voltage.

- Connector: Disconnected
- Ignition switch: ON

Voltage (V)
B+

OK → 2

NG → Repair the harness. (Ⓐ3 – MFI relay)

2

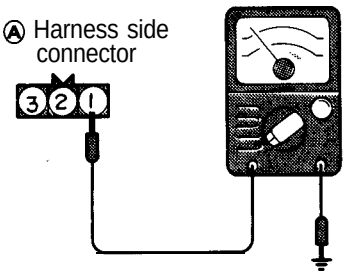

6AF0057

Check for continuity of the ground circuit.

- Connector: Disconnected

OK → 3

NG → Repair the harness. (Ⓐ1 – Ground)

3

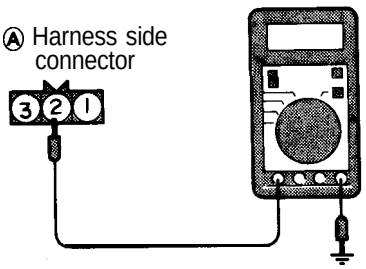

6AF0059

Measure the impressed voltage.

- Connector: Disconnected
- Ignition switch: ON

Voltage (V)
4.8 – 5.2

OK → STOP

NG → Repair the harness. (Ⓐ2 – 88)

CRANKSHAFT POSITION SENSOR

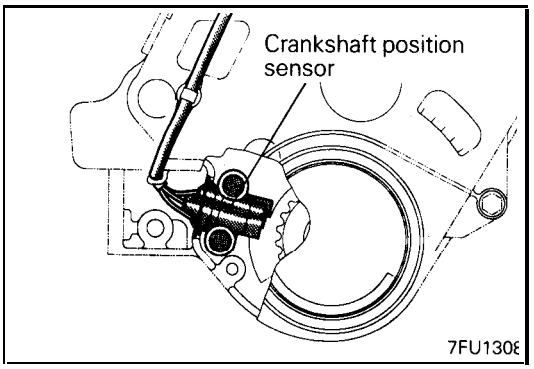

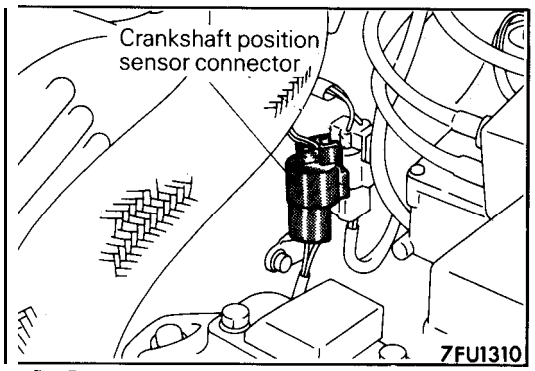

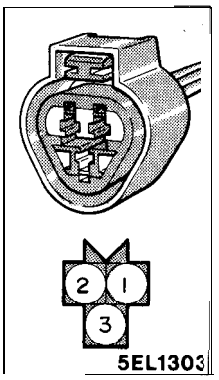

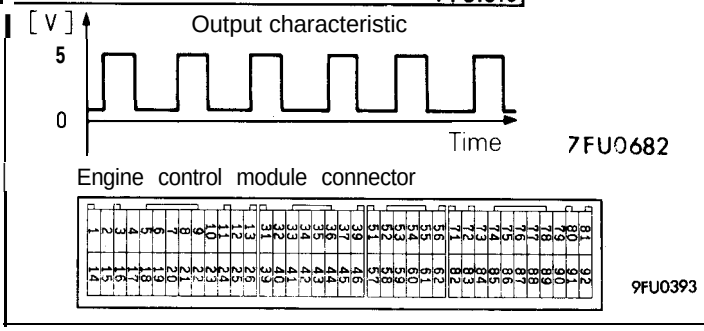

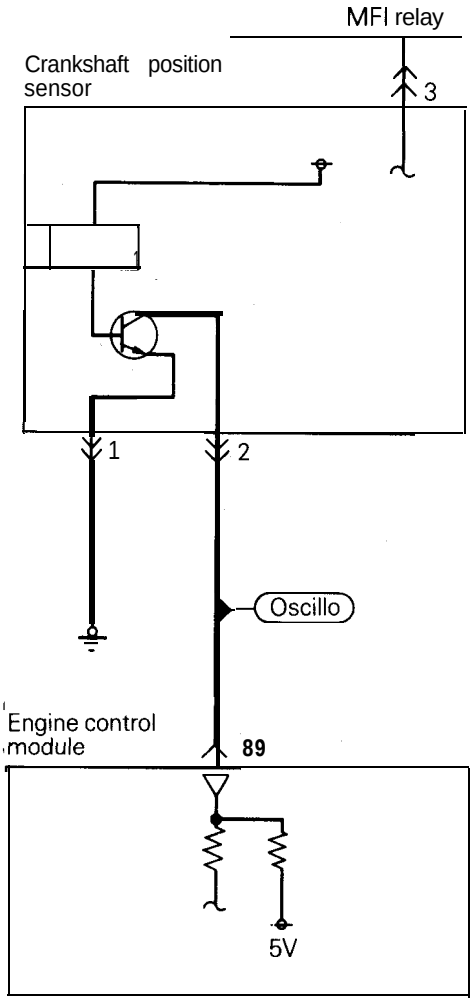

OPERATION

Refer to P.14A-104.

TROUBLESHOOTING HINTS

Refer to P.14A-104.

INSPECTION

Using Scan Tool

Function	Item No.	Data display	Check condition	Check content	Normal state
Data reading	22	Cranking speed	● Engine cranking ● Tachometer connected (check on and off of primary current of ignition coil by tachometer)	Compare cranking speed and scan tool reading	Indicated speed to agree

NOTE
(1) The tachometer indicates a third of the actual engine speed. Therefore, 3 times the tachometer indication is the actual engine speed.
(2) When the tachometer is set to the 2-cylinder range, it indicates actual engine speed.

Function	Itern No.	Data display	Check condition	Coolant temperature	Standard value
Data reading	22	Idle speed	● Engine: Running at idle ● Closed throttle position switch: ON	At -20°C (-4°F)	1,275 – 1,475 rpm
				At 0°C (32°F)	1,225 – 1,425 rpm
				At 20°C (68°F)	1,100 – 1,300 rpm
				At 40°C (104°F)	950 – 1,150 rpm
				At 80°C (176°F)	600 – 800 rpm

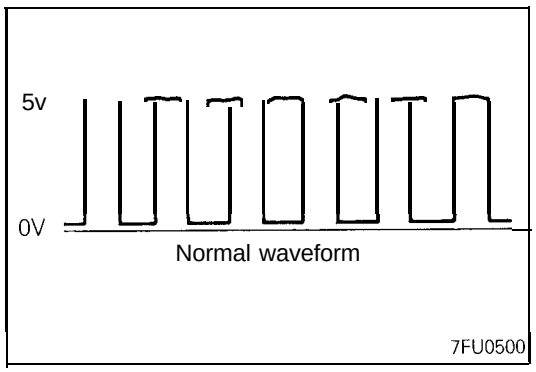

Using Oscilloscope

(1) Run the engine at idle speed.
(2) Connect the probe to the oscilloscope pick-up point as shown in the circuit diagram, and check the waveform.

HARNESS INSPECTION

1

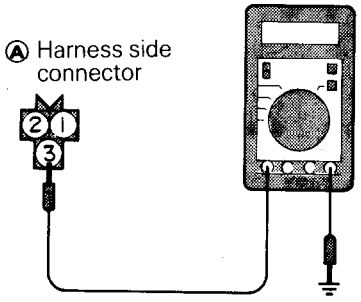

7FU1331

Measure the power supply voltage.

- Connector: Disconnected
- Ignition switch: ON

Voltage (V)
B+

OK → 2

NG → Repair the harness. (Ⓐ3 – MFI relay)

2

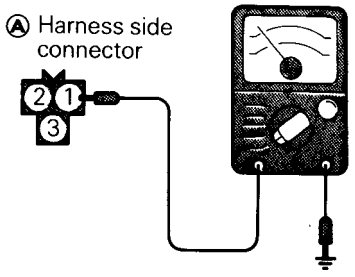

6AF0062

Check for continuity of the ground circuit.

- Connector: Disconnected

OK → 3

NG → Repair the harness. (Ⓐ1 – Ground)

3

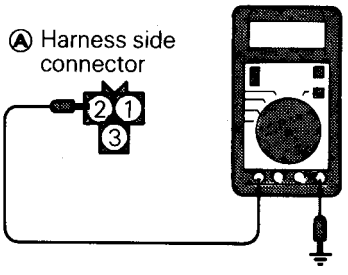

6AF0064

Measure the impressed voltage.

- Connector: Disconnected
- Ignition switch: ON

Voltage (V)
4.8 – 5.2

OK → STOP

NG → Repair the harness. (Ⓐ2 – 89)

IGNITION SWITCH-ST <M/T>

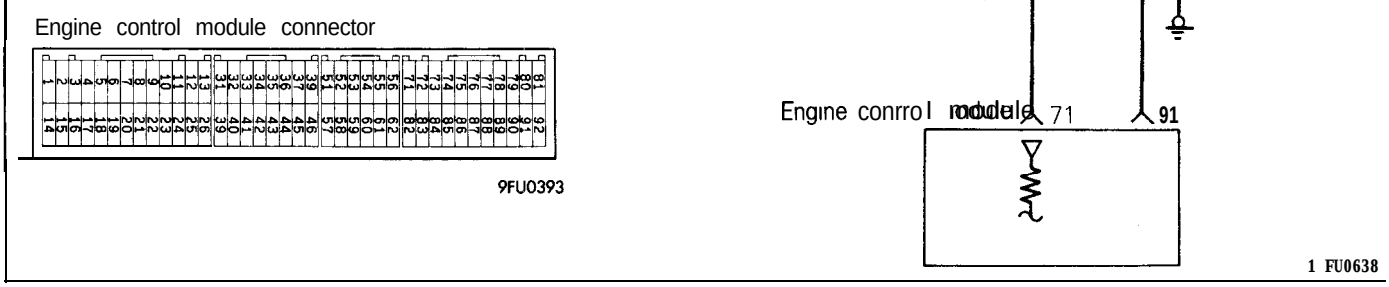

OPERATION

Refer to P.14A-109.

INSPECTION

Refer to P.14A-109.

HARNESS INSPECTION

1	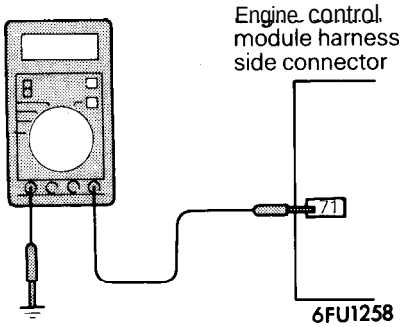	Measure the input voltage to the engine control module. • Engine control module connector: Disconnected • Ignition switch: START Voltage (V): 8 or more	OK → 2 NG → Repair the harness. (71 – Ignition switch)
2	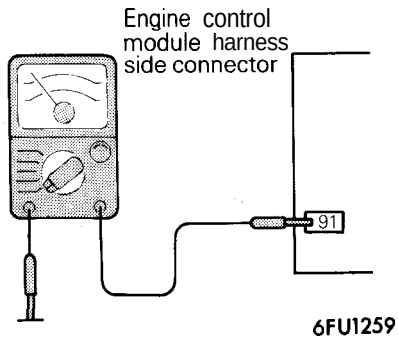	Check for continuity of the ground circuit. • Engine control module connector: Disconnected	OK → STOP NG → Repair the harness. (91 – Ground)

IGNITION SWITCH-ST AND PARK/NEUTRAL POSITION SWITCH (PNP SWITCH) <A/T>

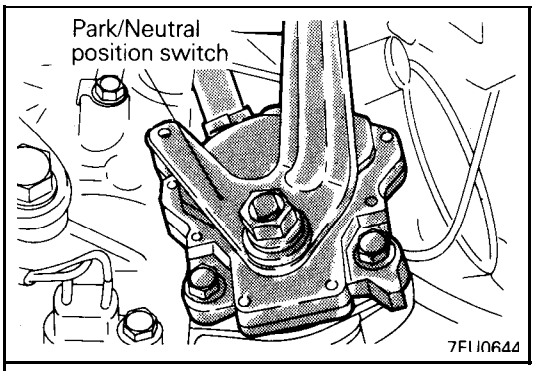

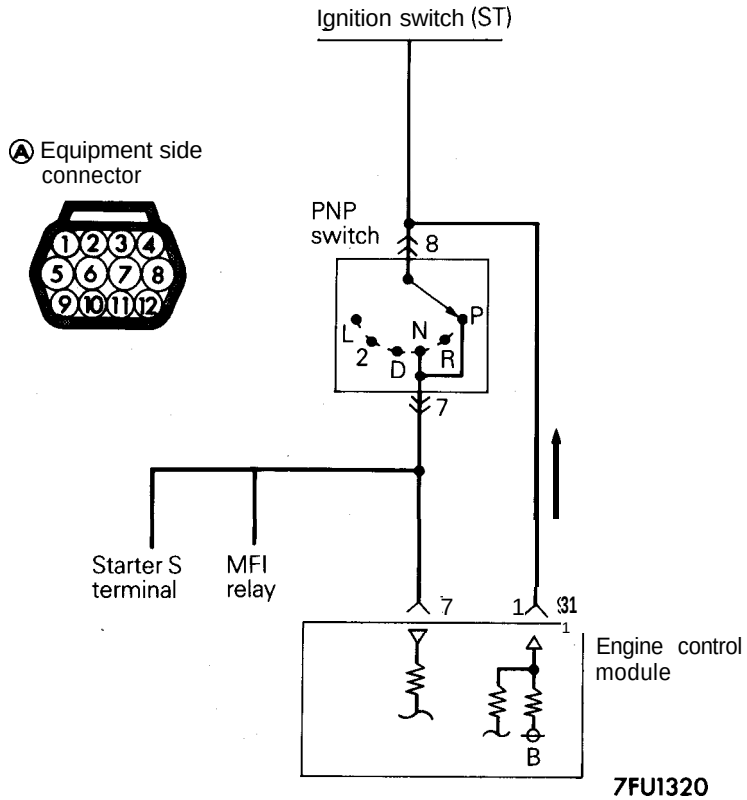

Engine control module connector

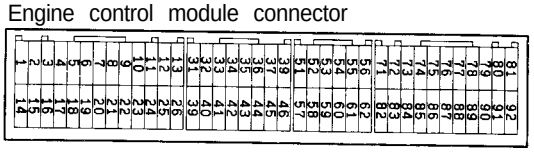

9FU0393

OPERATION

Refer to P.14A-110.

TROUBLESHOOTING HINTS

Refer to P.14A-110.

INSPECTION

Refer to P.14A-111.

HARNESS INSPECTION

1 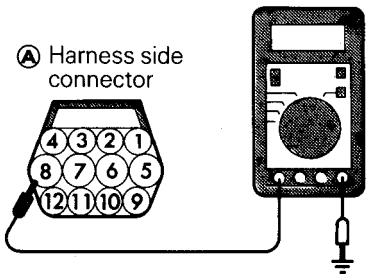 9FU0268	Measure the power supply voltage. • Engine control module connector: Disconnected • PNP switch connector: Disconnected • Ignition switch: START Voltage (V): B+	OK →	2
		NG →	Check the power supply circuit.
2 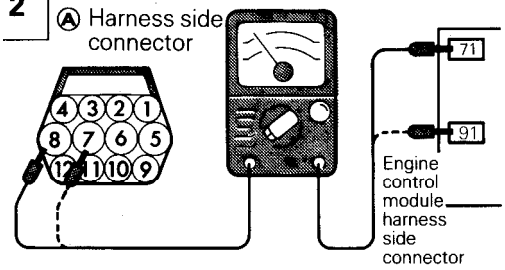 9FU0269	Check for continuity between the PNP switch and engine control module. • Engine control module connector: Disconnected • PNP switch connector: Disconnected NOTE Insert the probes of the circuit tester into both ends of the harness.	OK →	3
		NG →	Repair the harness. (Ⓐ 8 – 91) (Ⓐ 7 – 71)
3 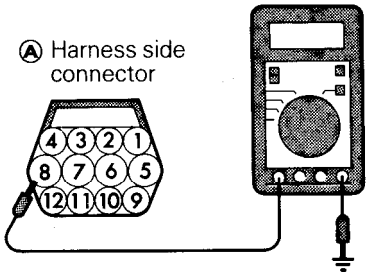 9FU0268	Measure the impressed voltage to the PNP switch. • Engine control module connector: Connected • PNP switch connector: Disconnected • Ignition switch: ON Voltage (V): B+	OK →	STOP
		NG →	Replace the engine control module.

VEHICLE SPEED SENSOR <Non Turbo>

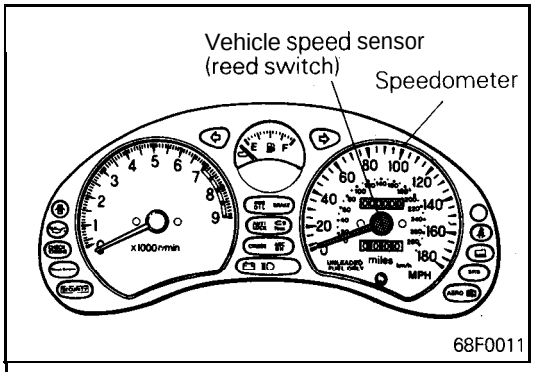

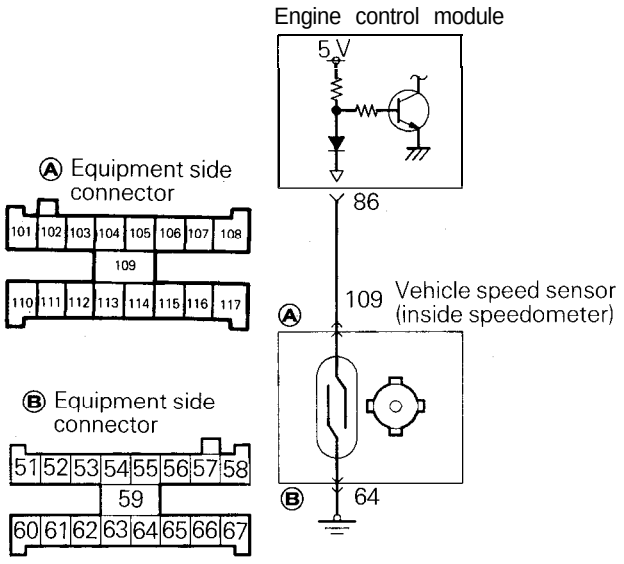

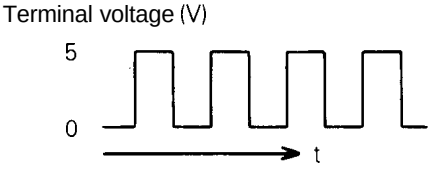

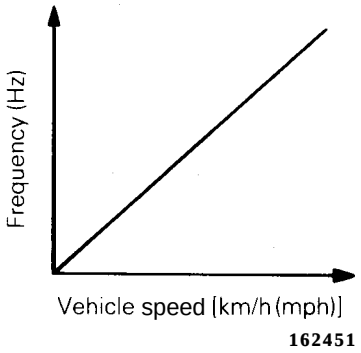

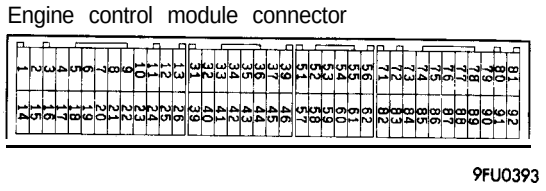

OPERATION

Refer to P.14A-112.

TROUBLESHOOTING HINTS

Refer to P.14A-112.

HARNESS INSPECTION

2 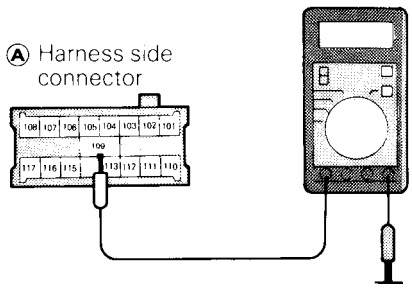	Measure the power supply voltage of the vehicle speed sensor. • Connector: Disconnected • Ignition switch: ON Voltage (V): 4.5 – 4.9	OK →	3
		NG →	Repair the harness. (Ⓐ 109 – 86)
3 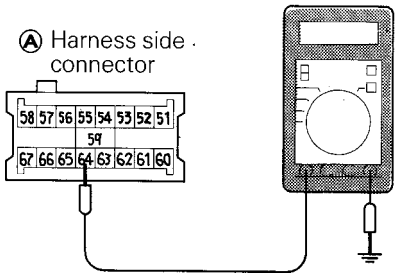	Check for continuity of the ground circuit. • Connector: Disconnec	OK →	STOP
		NG →	Repair the harness. (Ⓑ 64 – Ground)

SENSOR INSPECTION

Refer to GROUP 8 – Meters and Gauges.

VEHICLE SPEED SENSOR <Turbo>

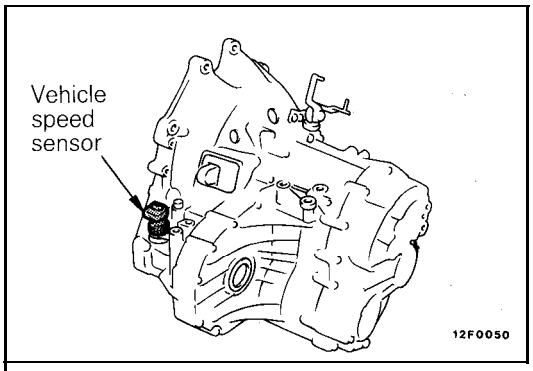

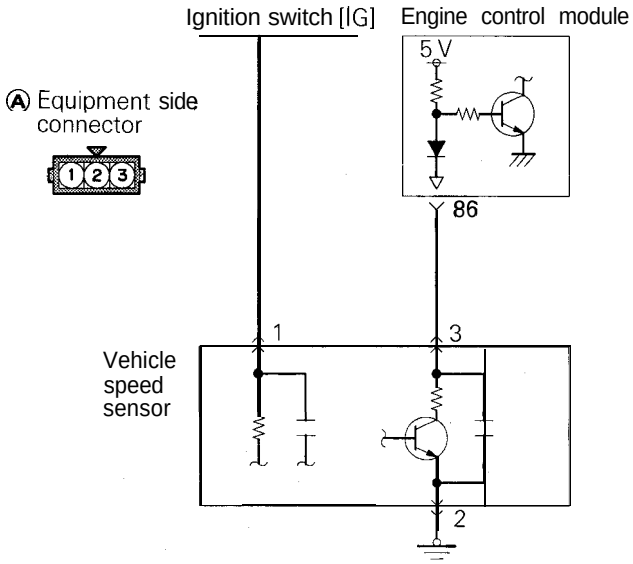

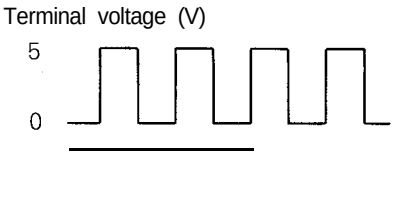

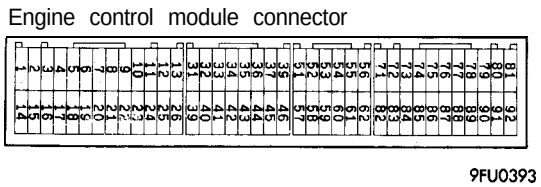

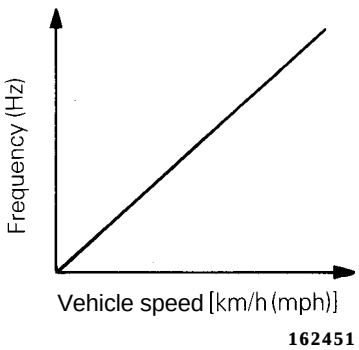

OPERATION

- The vehicle speed sensor is directly attached to the speedometer driven gear in the transmission. It detects the vehicle speed and sends it to the engine control module after converting to pulse signals, based on which the engine control module controls the idle speed control motor.
- The output terminal of the vehicle speed sensor has a voltage of approx. 5 V applied from the control module. The vehicle speed sensor generates pulse signals by turning on and off the power transistor.

TROUBLESHOOTING HINTS

Refer to P.14A-112.

HARNESS INSPECTION

1

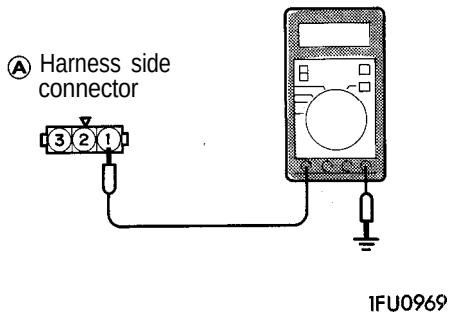

Measure line voltage applied to vehicle speed sensor.

- Connector: Disconnected
- Ignition switch: ON

Voltage (V)
B+

OK → 2

NG → Repair the harness. (Ⓐ1 – Ignition switch)

2

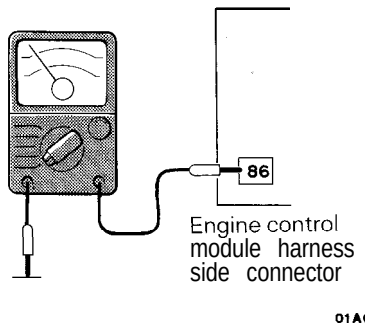

Check the vehicle speed sensor output circuit for continuity.

- Engine control module connector: Disconnected
- Ignition switch: ON
- Move the vehicle

Continuity
Continuity / No continuity — One rotation

OK → STOP

NG → 3

3

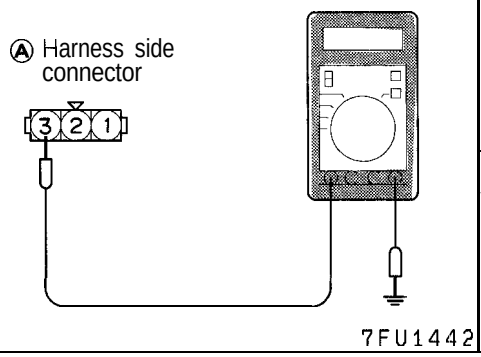

Measure the power supply voltage of the vehicle speed sensor.

- Connector: Disconnected
- Ignition switch: ON

Voltage (V)
4.5 – 4.9

OK → 4

NG → Repair the harness. (Ⓐ3 – 86)

4

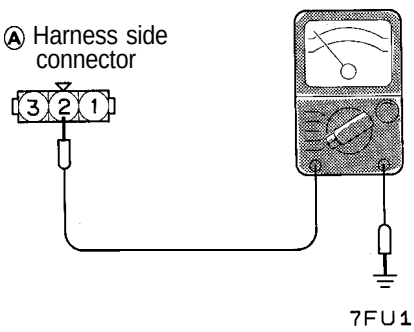

Check for continuity of the ground circuit.

- Connector: Disconnected

OK → STOP

NG → Repair the harness. (Ⓐ2 – Ground)

SENSOR INSPECTION

Refer to GROUP 8 – Meters and gauges

POWER STEERING PRESSURE SWITCH

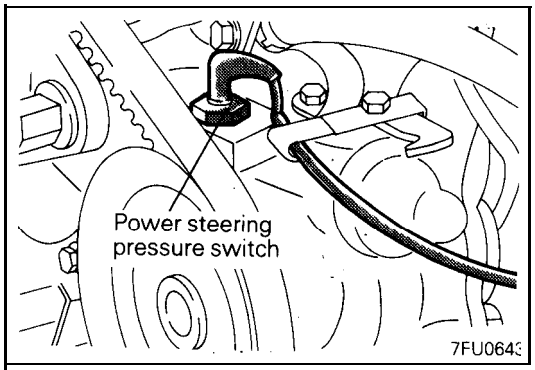

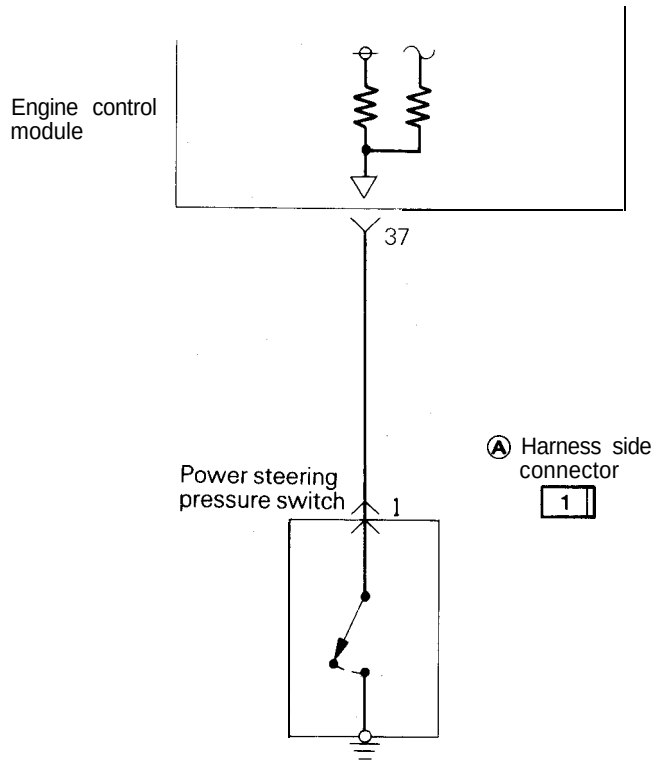

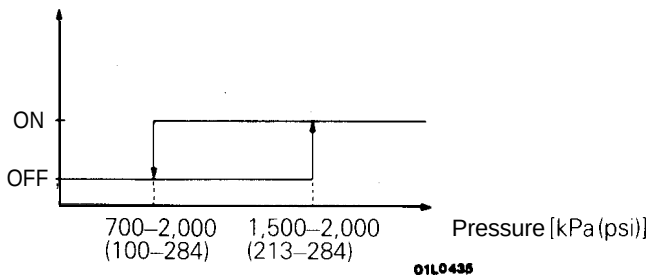

OPERATION

Refer to P.14A-114.

INSPECTION

Refer to P.14A-115

HARNESS INSPECTION

1 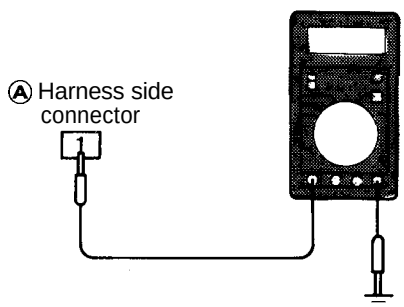	Measure the power supply voltage. • Connector: Disconnected • Ignition switch: ON Voltage (V): B+	OK → STOP NG → Repair the harness. (Ⓐ1 – 37)

SENSOR INSPECTION

Refer to GROUP 19 – Service Adjustment Procedures.

AIR CONDITIONING SWITCH AND COMPRESSER CLUTCH RELAY

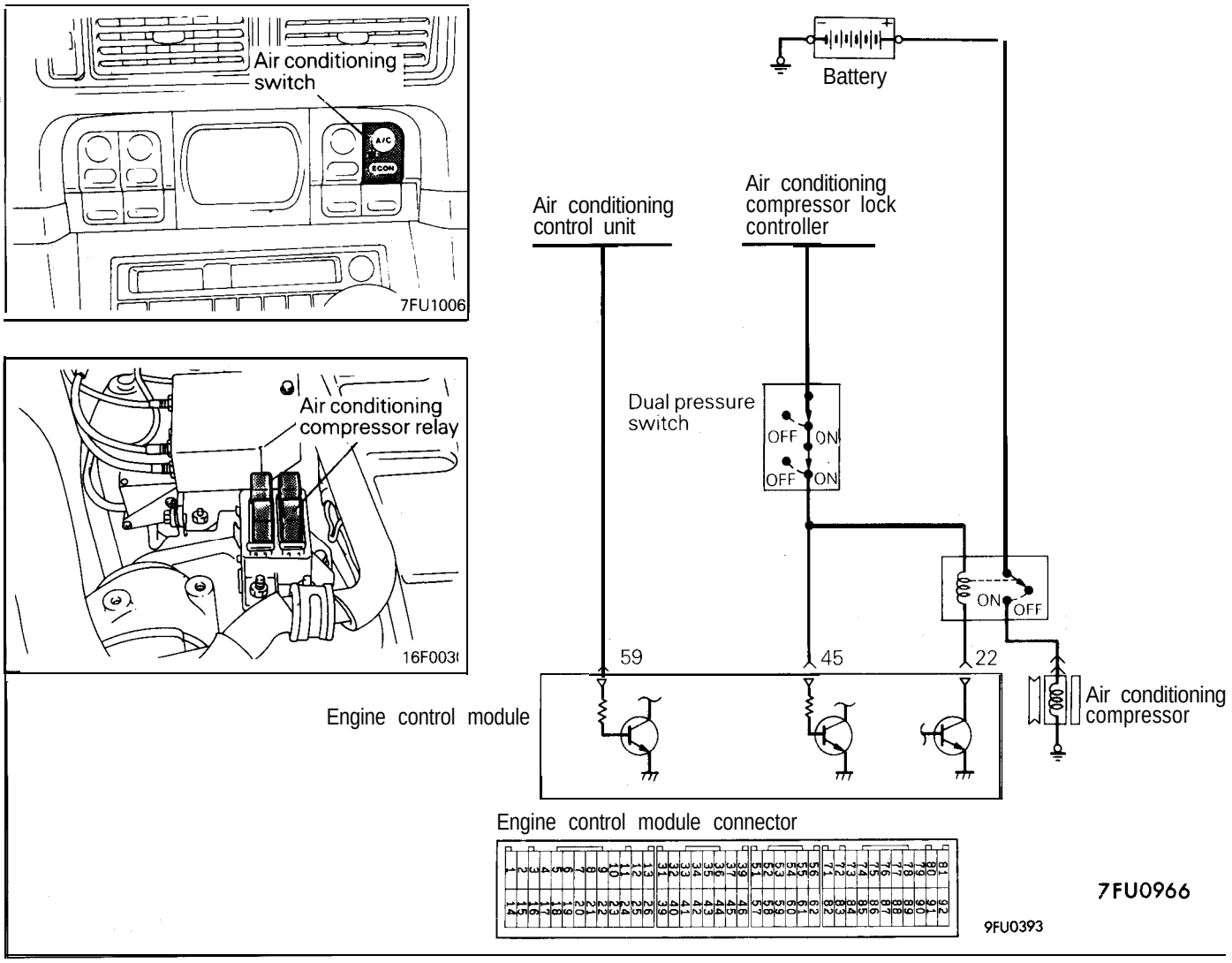

OPERATION
Refer to P.14A-116.

TROUBLESHOOTING HINTS
Refer to P.14A-116.

INSPECTION
Refer to P.14A-1 16.

HARNESS INSPECTION

1

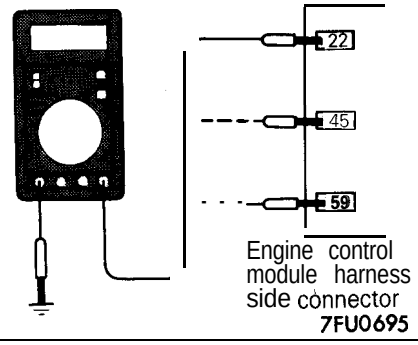

Measure the power supply voltage of the air conditioning circuit.

- Air conditioning switch: ON
- Engine control module connector: Disconnected
- Ignition switch: ON
- Dual air conditioning switch: ⊠

Voltage (V)
B+

OK → STOP

NG → Check the air conditioning circuit.

AIR CONDITIONING INSPECTION
Refer to GROUP 24 – Service Adjustment Procedures

KNOCK SENSOR

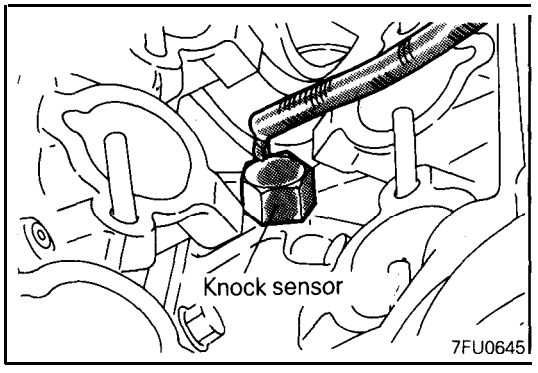

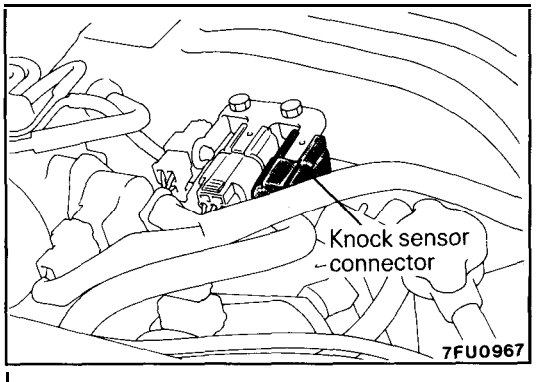

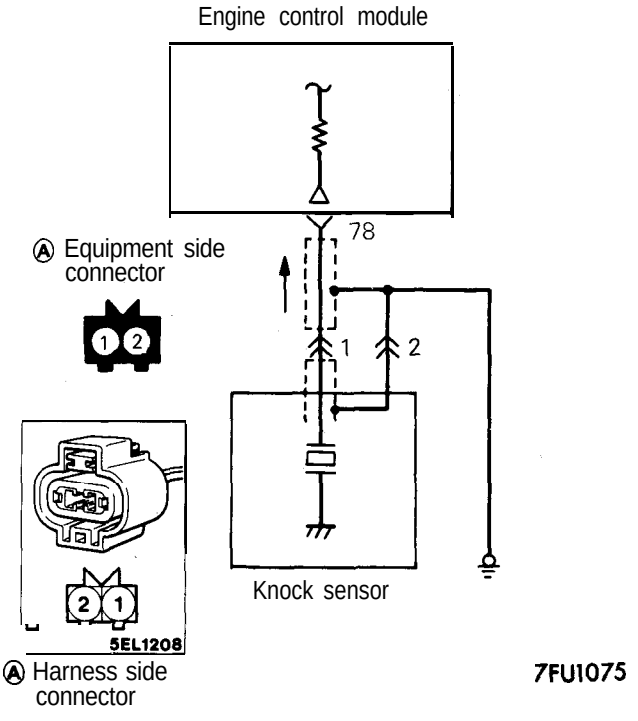

Engine control module connector

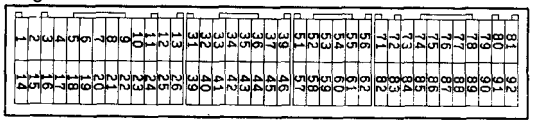

OPERATION

Refer to P.14A-118.

TROUBLESHOOTING HINTS

Refer to P.14A-118.

HARNESS INSPECTION

1 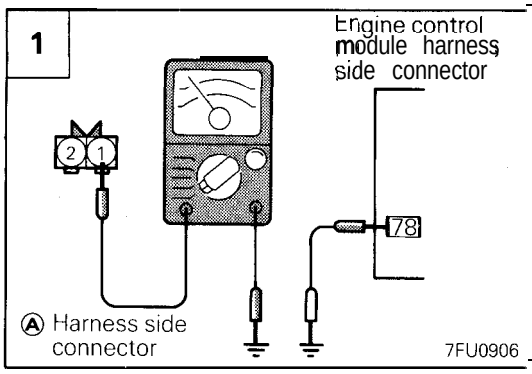	Check for an open-circuit or a short-circuit to ground, between the engine control module and knock sensor. • Knock sensor connector: Disconnected • Engine control module connector: Disconnected	OK NG	2 Repair the harness. (Ⓐ 1 – 78)
2 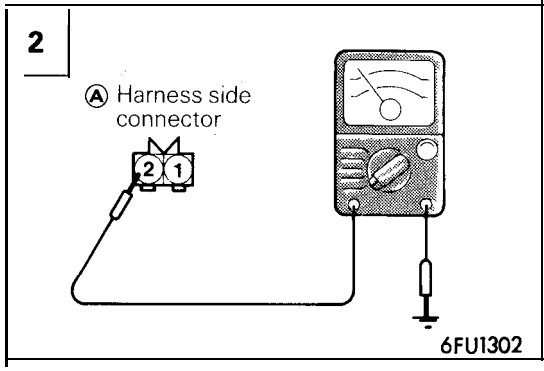	Check for continuity of the ground circuit. • Connector: Disconnected	OK NG	STOP Repair the harness. (Ⓐ 2 – Ground)

ELECTRICAL LOAD SWITCH

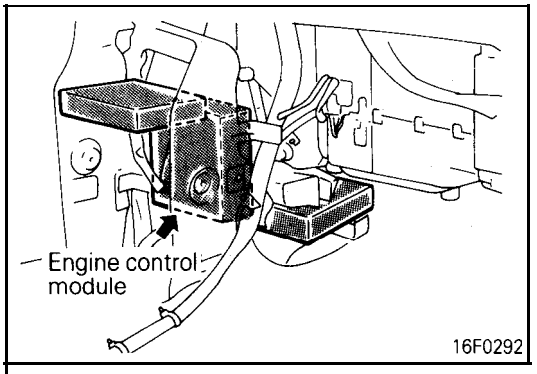

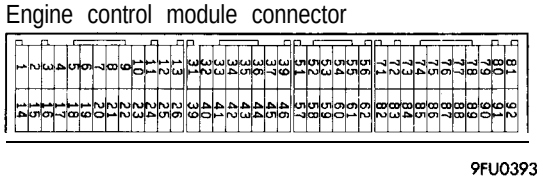

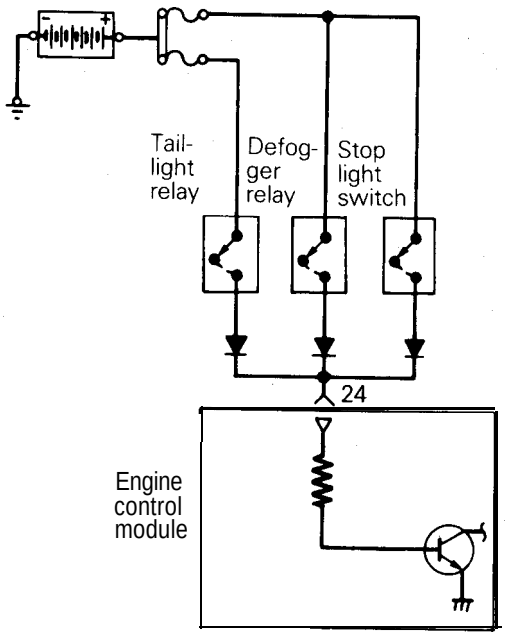

OPERATION

Refer to P.14A-120.

INSPECTION

Refer to P.14A-120.

HARNESS INSPECTION

Refer to P.14A-121.

FAN MOTOR RELAY (RADIATOR, AIR CONDITIONER CONDENSER)

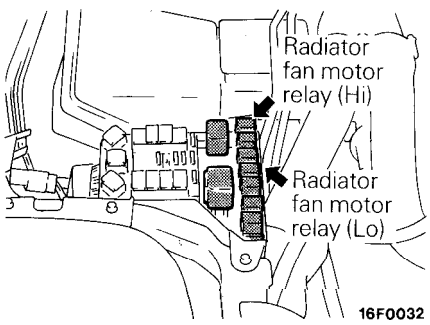

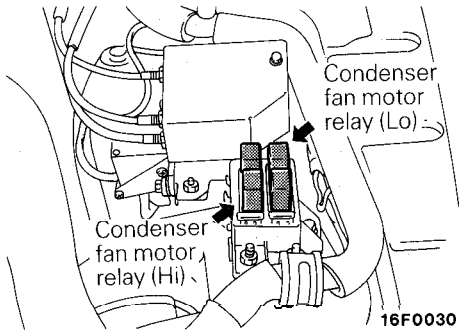

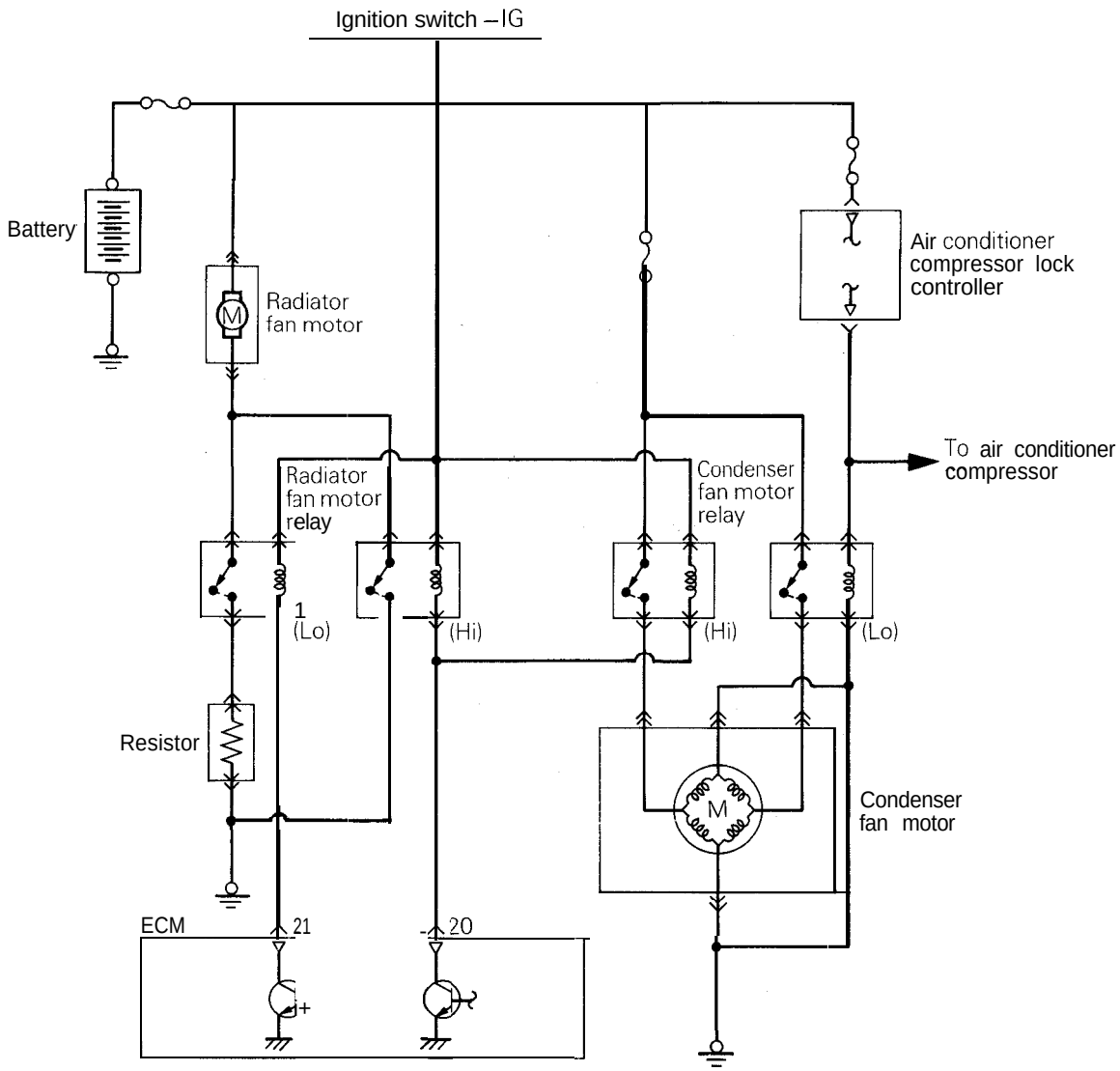

Engine control module connector

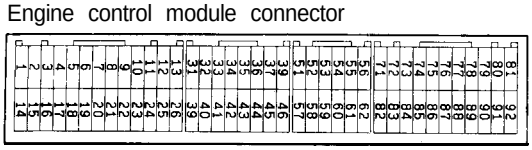

9FU0393

OPERATION

Refer to P.14A-123.

INSPECTION

Refer to P.14A-123.

HARNESS INSPECTION

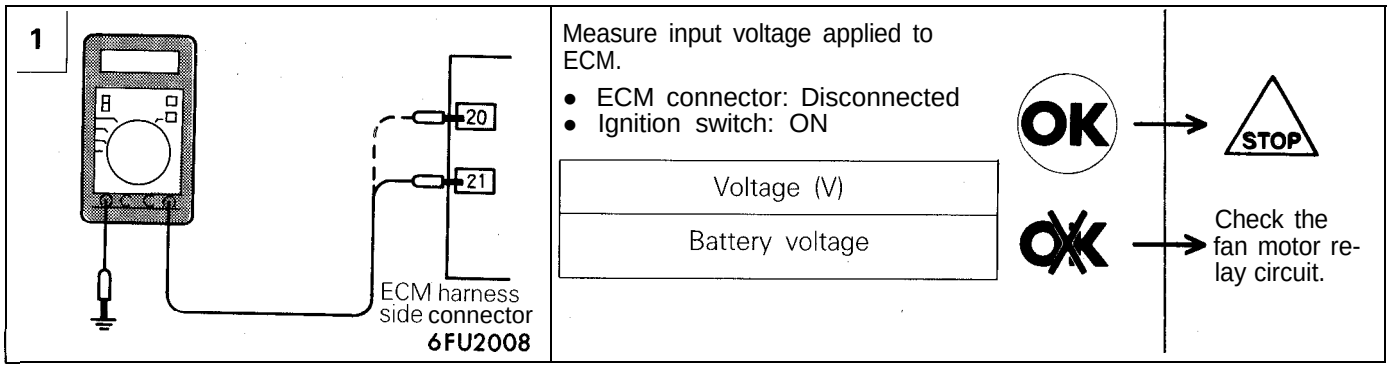

FAN MOTOR RELAY INSPECTION

Refer to Radiator Check in GROUP 7 and Power Relay Check in GROUP 24.

MUFFLER MODE CHANGEOVER SWITCH <Turbo>

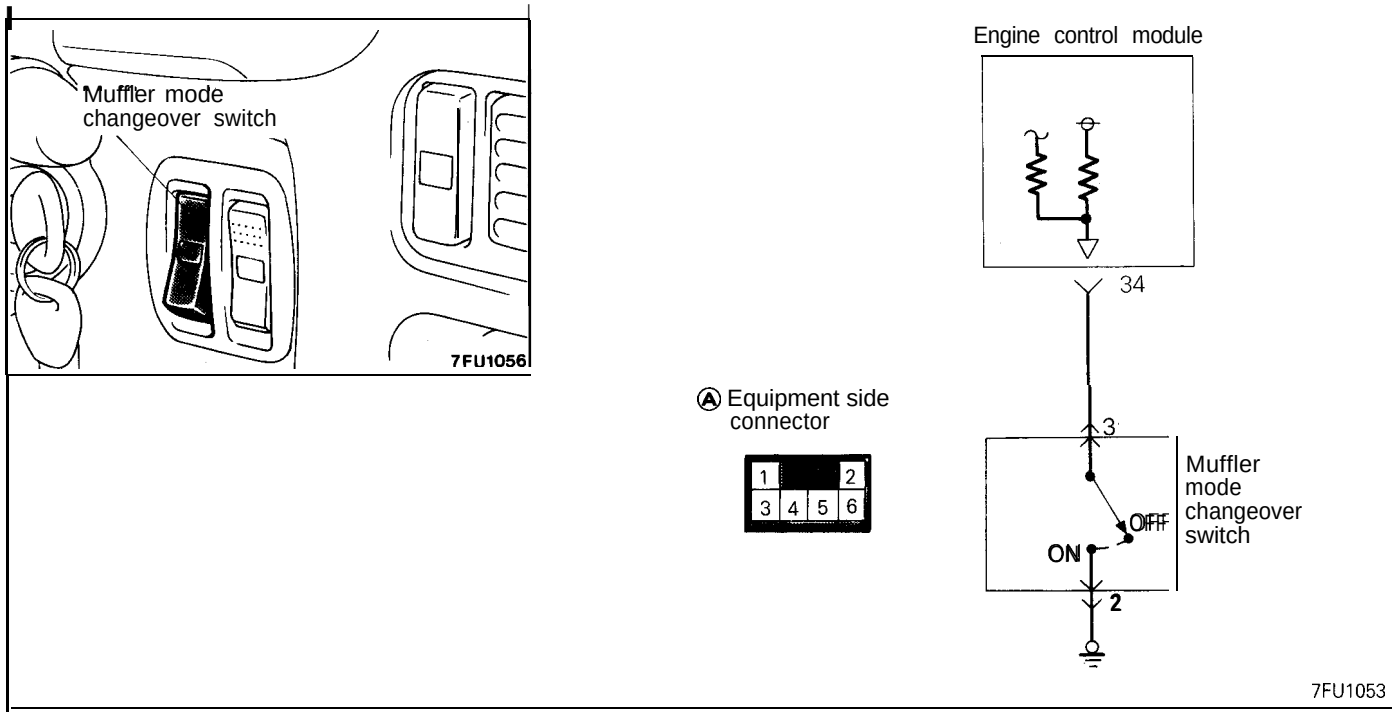

OPERATION

- If the operator turns the muffler mode changeover switch to ON or OFF position, this is converted to high/low voltage to be sent to the engine control module. Receiving this signal, the engine control module performs the dual mode (TOUR/SPORT mode) muffler control.
- The output terminal of the muffler mode changeover switch has battery voltage applied to it from the engine control module through the resistor inside the module. Place the muffler mode changeover switch to the ON position, and the muffler mode changeover switch circuit will be closed to short the voltage applied to output terminal to the ground. Accordingly, the output voltage of the muffler mode changeover switch changes from high to low.

INSPECTION

Using Scan Tool

Function	Item No.	Data display	Check condition	Muffler mode changeover switch condition	Normal display
Data list	35	Switch condition	Ignition switch: ON	Turn to TOUR mode	ON
				Turn to SPORT mode	OFF

HARNESS INSPECTION

1

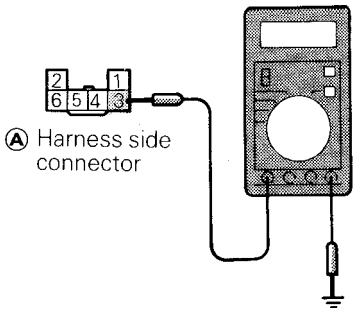

Measure the power supply voltage.

- Connector: Disconnected
- Ignition switch: ON

Voltage (V)
B+

OK → 2

NG → Repair the harness. (Ⓐ3 -)

2

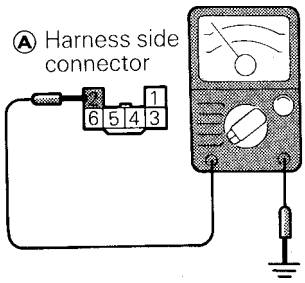

Check for continuity of the ground circuit.

- Connector: Disconnected

OK → STOP

NG → Repair the harness. (Ⓐ2 – Ground)

INDUCTION CONTROL VALVE POSITION SENSOR <Non Turbo>

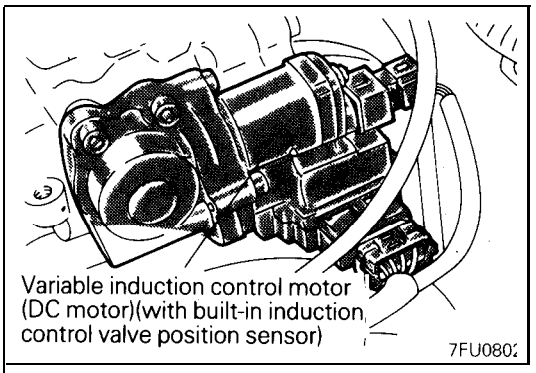

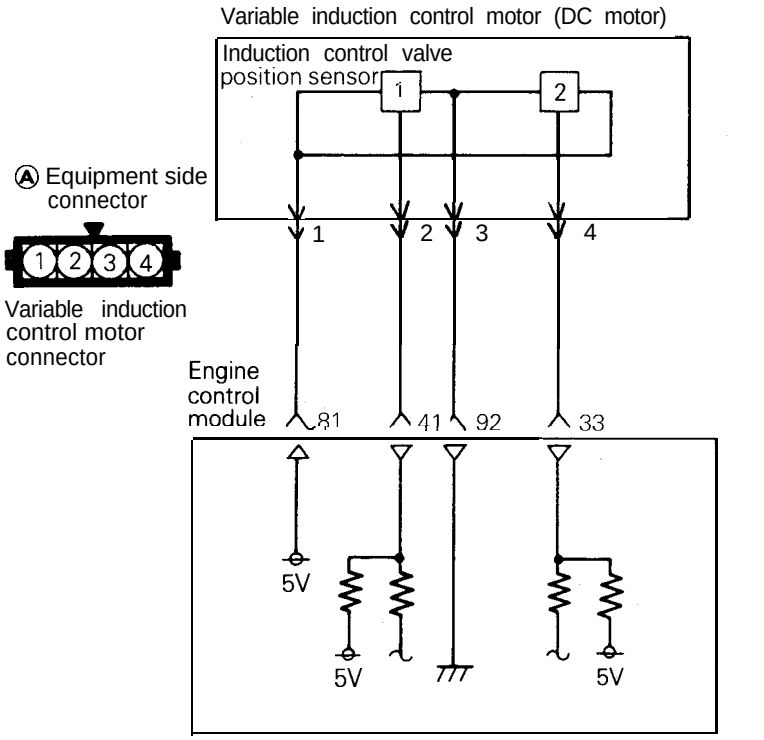

OPERATION

Refer to P.14A-124.

HARNESS INSPECTION

1

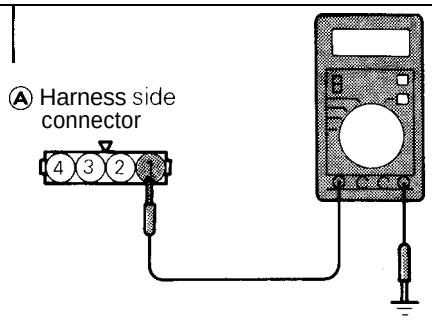

6FU1241

Measure the power supply voltage of the air intake control valve position sensor.

- Connector: Disconnected
- Ignition switch: ON

Voltage (V)
4.8 – 5.2

OK → 2

NG → Repair the harness. (Ⓐ1 – 81)

2

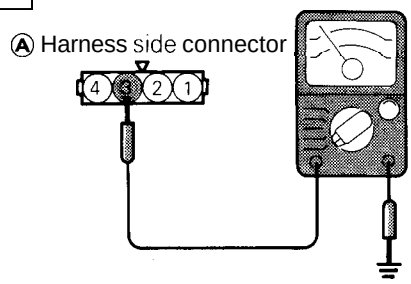

7FU0824

Check for continuity of the ground circuit.

- Connector: Disconnected

OK → 3

NG → Repair the harness. (Ⓐ3 – [illegible])

3

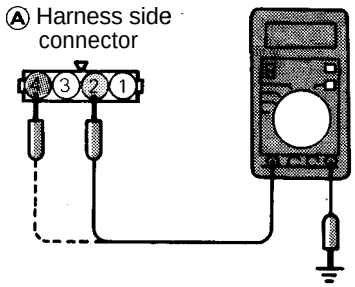

7FU0825

Measure the terminal voltage.

- Connector: Disconnected
- Ignition switch: ON

OK → STOP

NG → Repair the harness. (Ⓐ2 – 41) (Ⓐ4 – 33)

EGR TEMPERATURE SENSOR

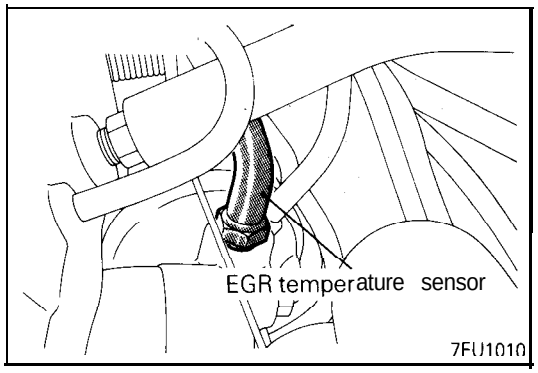

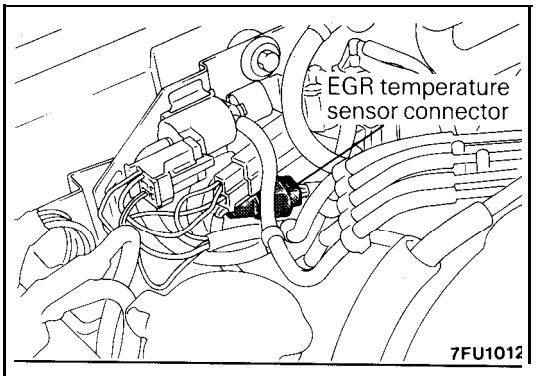

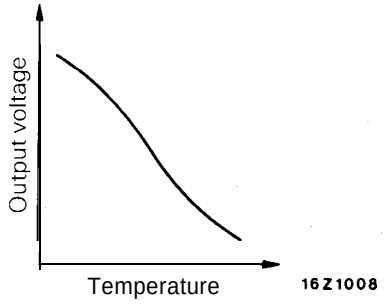

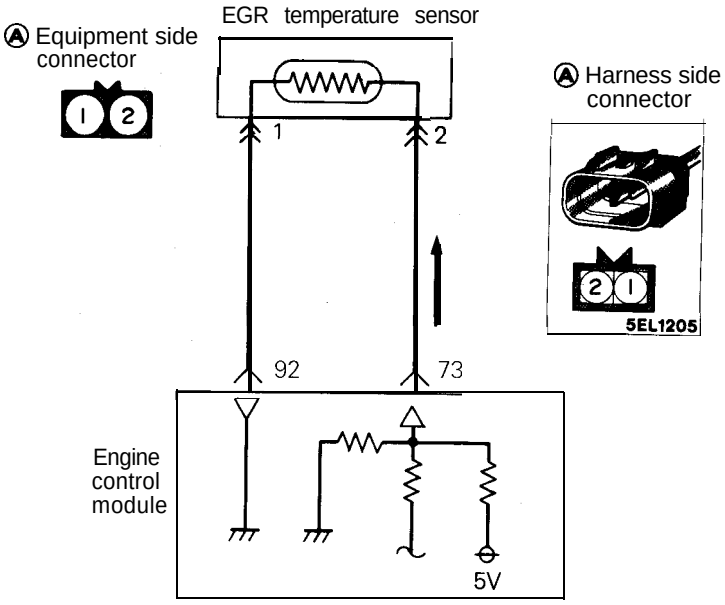

OPERATION

Refer to P.14A-126.

INSPECTION

Refer to P.14A-127.

HARNESS INSPECTION

1 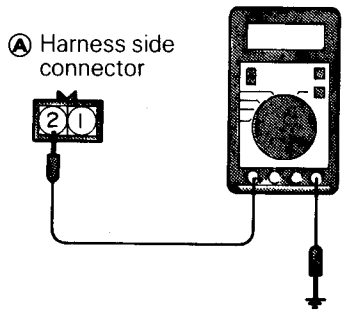	Measure the power supply voltage. • Connector: Disconnected • Ignition switch: ON Voltage (V): 4.3 – 4.7	OK →	2
		NG →	Repair the harness. (Ⓐ 2 – 92)
2 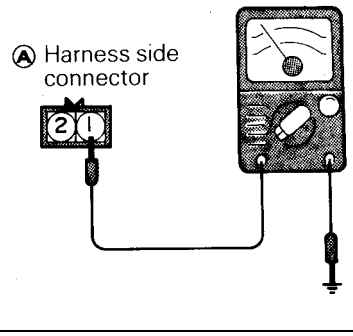	Check for continuity of the ground circuit. • Connector: Disconnected	OK →	STOP
		NG →	Repair the harness. (Ⓐ 1 – 73)

SENSOR INSPECTION

Refer to GROUP 25 – Exhaust Gas Recirculation (EGR) System.

HEATED OXYGEN SENSOR <California – Non Turbo>

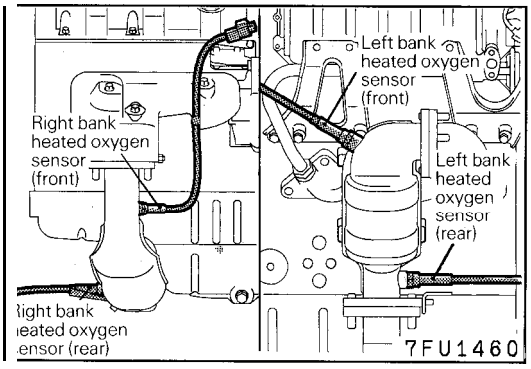

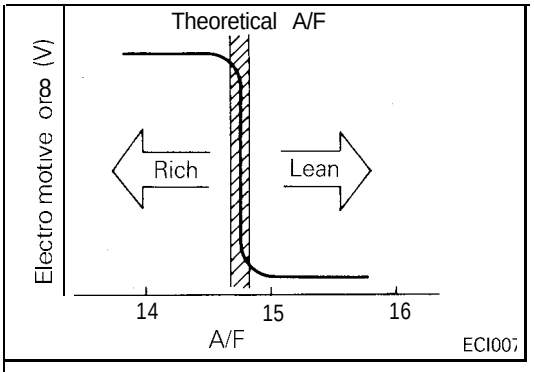

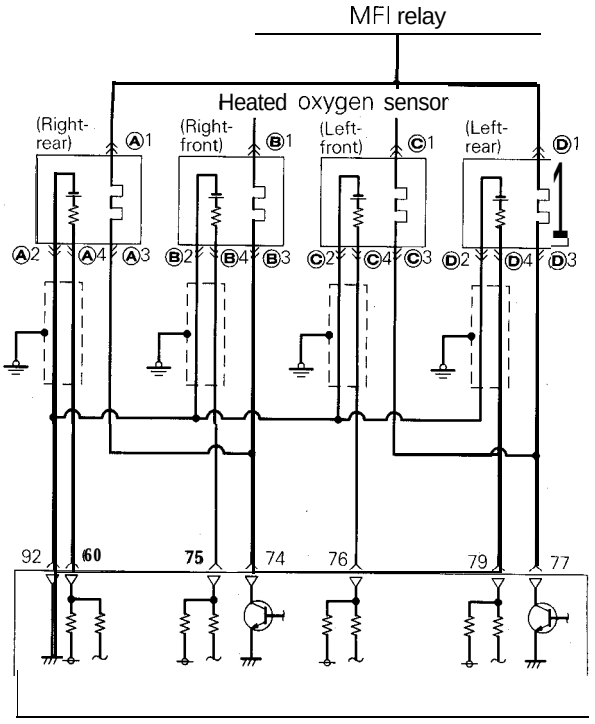

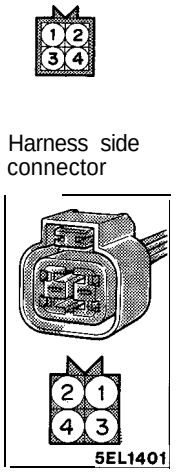

7FU1431

Engine control module connector

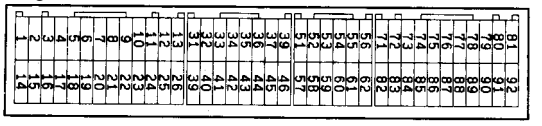

9FU0393

OPERATION

Refer to P.14A-128.

TROUBLESHOOTING

Refer to P.14A-129.

INSPECTION

Refer to P.14A-129.

HARNESS INSPECTION

1

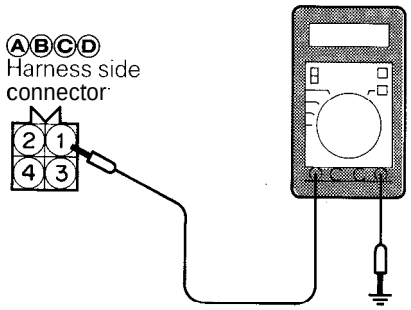

Measure the power supply voltage of the heated oxygen sensor.

- Connector: Disconnected
- Ignition switch: ON

Voltage (V)
B+

OK → 2

NG → Repair the harness. (A1, B1, C1, D1 – MFI relay)

2

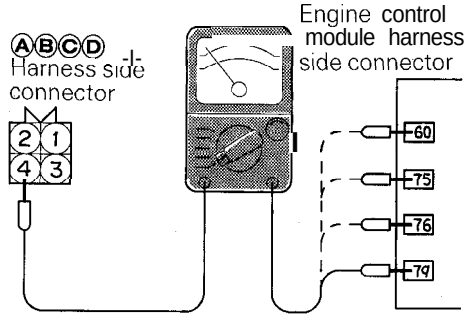

Check for an open-circuit, or a short-circuit to ground, between the engine control module and the heated oxygen sensor.

- Heated oxygen sensor connector: Disconnected
- Engine control module connector: Disconnected

OK → 3

NG → Repair the harness. (A4 – [illegible], B4 – [illegible], C4 – 76, D4 – 79)

3

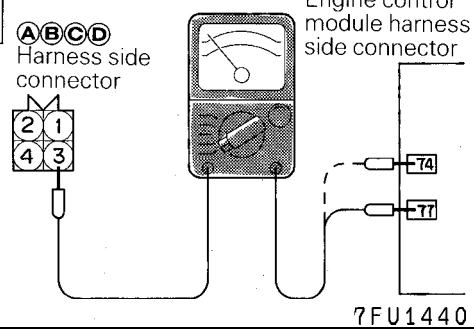

Check for an open-circuit, or a short-circuit to ground, between the engine control module and the heated oxygen sensor.

- Heated oxygen sensor connector: Disconnected
- Engine control module connector: Disconnected

OK → 4

NG → Repair the harness. (A3, B3 – 74, C3, D3 – 77)

4

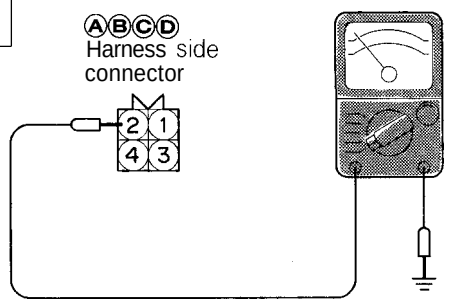

Check for continuity of the ground circuit.

- Connector: Disconnected

OK → STOP

NG → Repair the harness. (A2, B2, C2, D2 – 92)

SENSOR INSPECTION

Refer to P.14A-135.

INSTALLATION

Refer to P. 14A-135.

HEATED OXYGEN SENSOR <Turbo except for California>

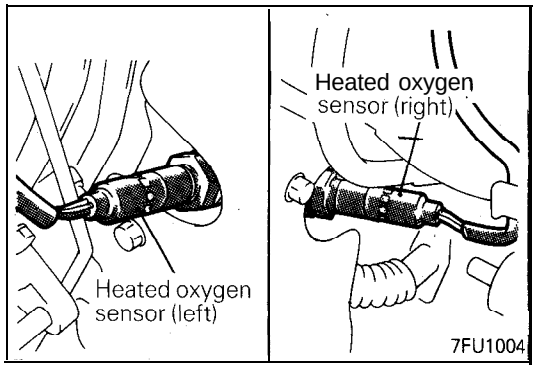

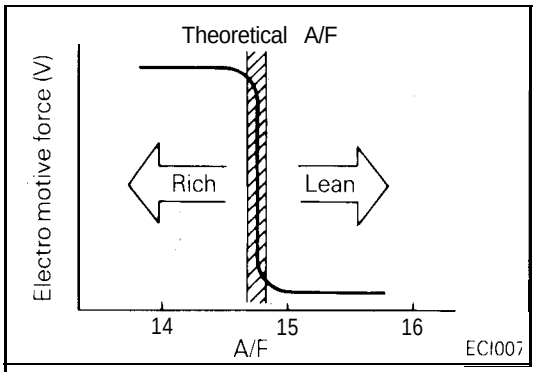

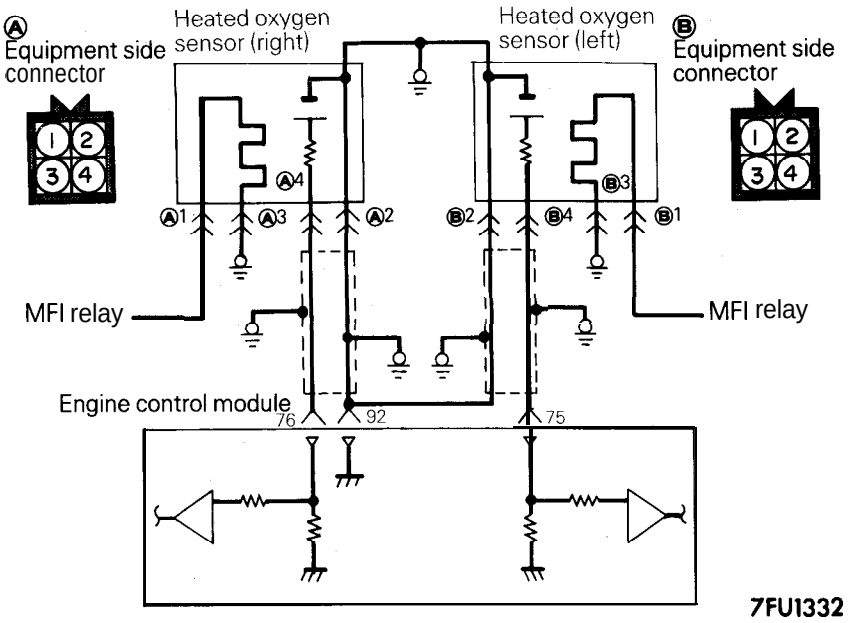

Engine control module connector

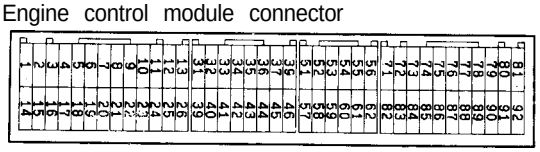

9FU0393

Ⓐ Harness side connector

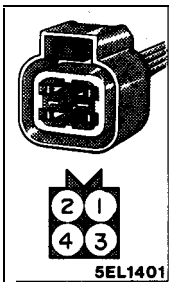

Ⓑ Harness side connector

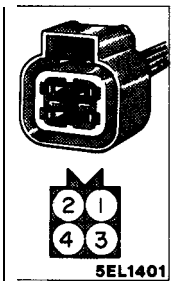

OPERATION

Refer to P.14A-128.

TROUBLESHOOTING

Refer to P.14A-129.

INSPECTION

Refer to P.14A-129.

HARNESS INSPECTION

1 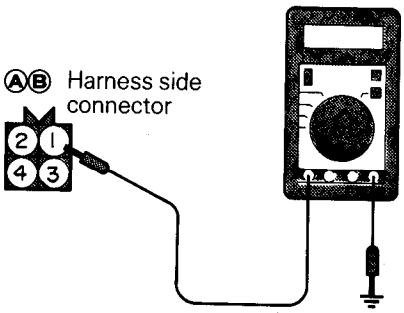	Measure the power supply voltage of the heated oxygen sensor. • Connector: Disconnected • Ignition switch: ON Voltage (V): B+	OK → 2 NG → Repair the harness. (A1, B1 – MFI relay)	
2 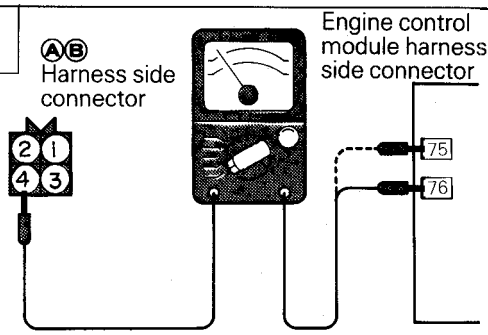	Check for an open-circuit, or a short-circuit to ground, between the engine control module and the heated oxygen sensor. • Heated oxygen sensor connector: Disconnected • Engine control module connector: Disconnected	OK → 3 NG → Repair the harness. (A4 – [illegible] B4 – 75)	
3 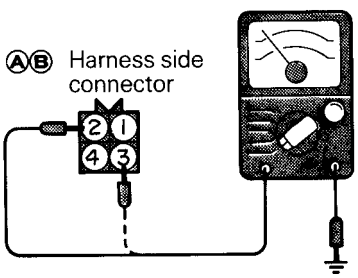	Check for continuity of the ground circuit. • Connector: Disconnected	OK → STOP NG → Repair the harness. (A2, B2 – 92) (A3, B3 – Ground)	

SENSOR INSPECTION

Refer to P.14A-135.

INSTALLATION

Refer to P.14A-135.

HEATED OXYGEN SENSOR <California – Turbo>

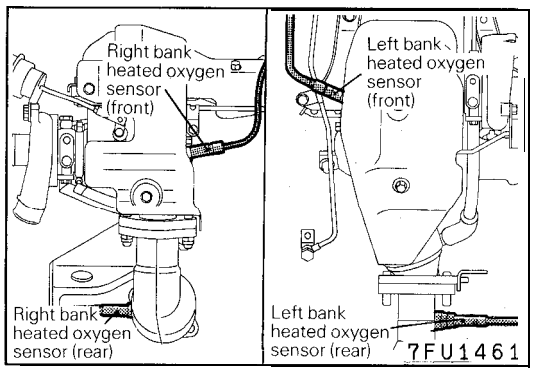

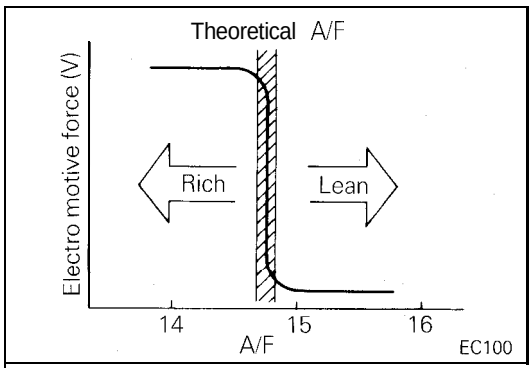

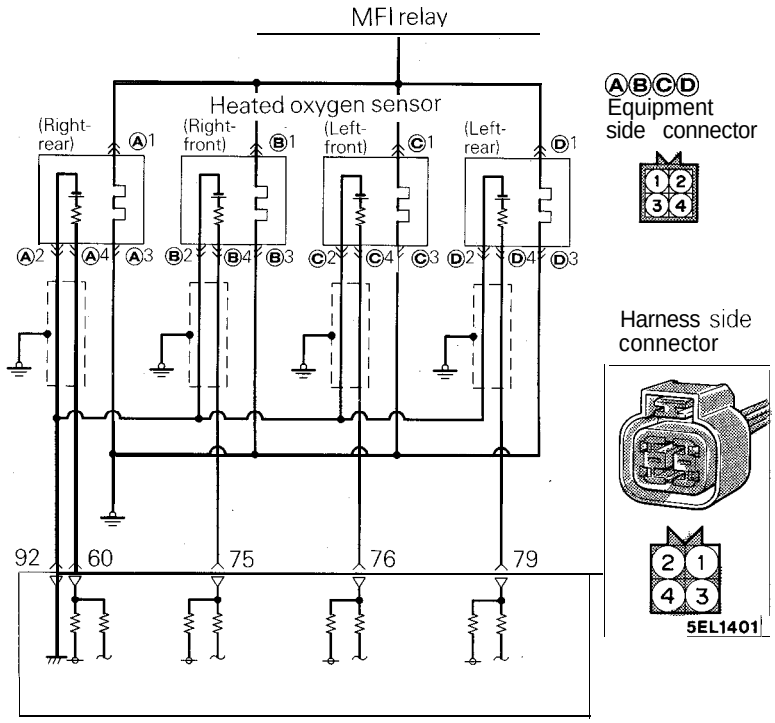

Engine control module connector

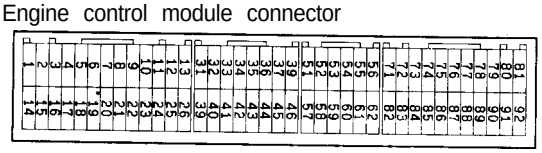

OPERATION

Refer to P.14A-128.

TROUBLESHOOTING

Refer to P.14A-129.

INSPECTION

Using Scan Tool

<Heated Oxygen Sensor (front)>

Function	Item No.	Data display	Check condition	Engine state	Standard value
Data reading	11 39	Sensor detection voltage	Engine: Warm-up (Make the mixture lean by engine speed reduction, and rich by racing)	When sudden deceleration from 4,000 rpm	200 mV or lower
				When engine is suddenly raced	600 – 1,000 mV
			Engine: Warm-up (Using the heated oxygen sensor signal, check the air/fuel mixture ratio, and also check the condition of control by the engine control module)	700 rpm (Idling)	400 mV or lower ↕ (changes) 600 – 1,000 mV
				2,000 rpm	

<Heated Oxygen Sensor (rear)>

Function	Item No.	Data display	Check condition	Engine state	Standard value
Data reading	59 69	Sensor voltage	• Transaxle: 2nd gear • Drive with wide open throttle	3,500 rpm	600 – 1,000 mV

HARNESS INSPECTION

1

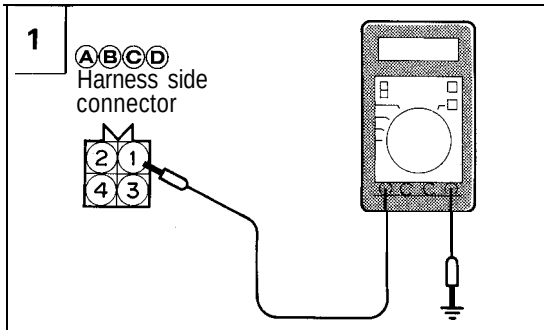

Measure the power supply voltage of the heated oxygen sensor.

- Connector: Disconnected
- Ignition switch: ON

Voltage (V)
B+

OK → 2

OK → Repair the harness. (A1, B1, C1, D1 – MFI relay)

2

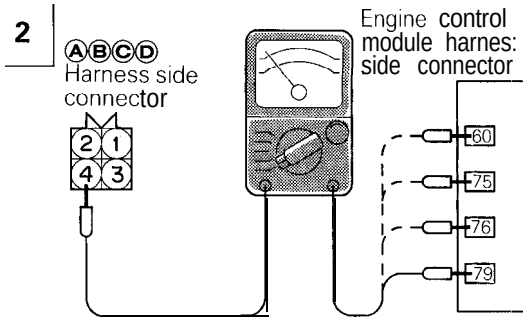

Check for an open-circuit, or a short-circuit to ground, between the engine control module and the heated oxygen sensor.

- Heated oxygen sensor connector: Disconnected
- Engine control module connector: Disconnected

OK → 3

OK → Repair the harness. (A4 – 60) (B4 – 75) (C4 –) (D4 – 79)

3

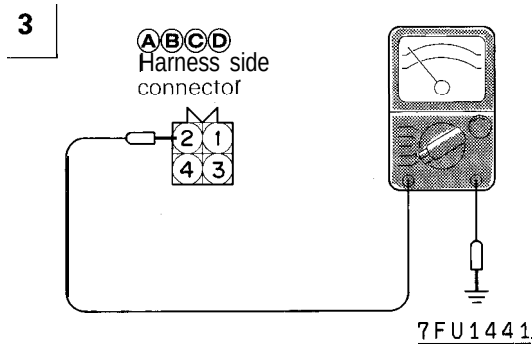

Check for continuity of the ground circuit.

- Connector: Disconnected

OK → 4

OK → Repair the harness. (A2, B2, C2, D2 – 92)

4	ⒶⒷⒸⒹ Harness side connector 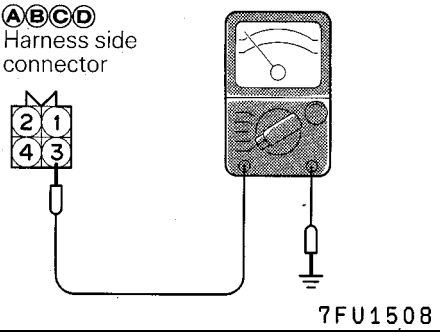	Check for continuity of the ground circuit. • Connector: Disconnected	OK → NG → Repair the harness. (Ⓐ3, Ⓑ3, Ⓒ3, Ⓓ3 – Ground)

SENSOR INSPECTION

Refer to P.14A-135.

INSTALLATION

Refer to P.14A-135.

INJECTORS <Non Turbo>

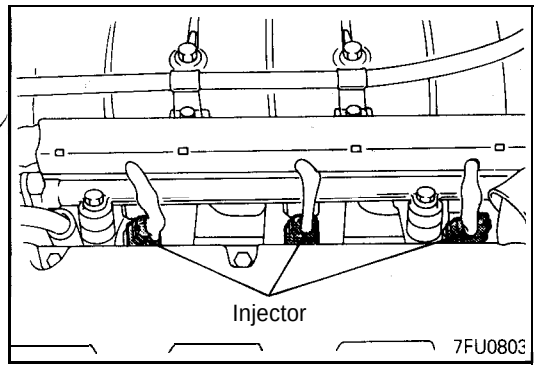

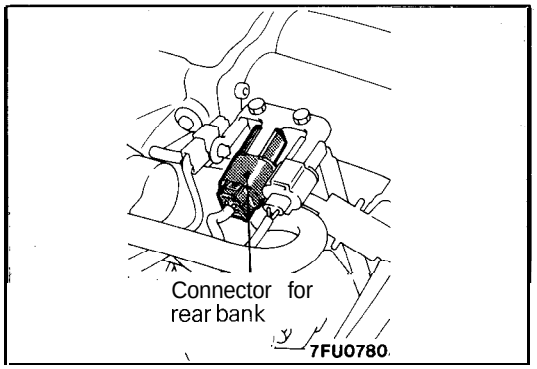

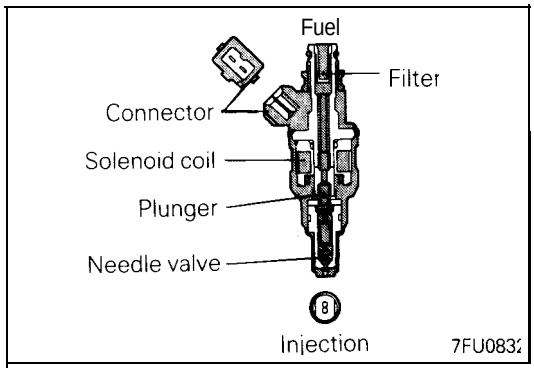

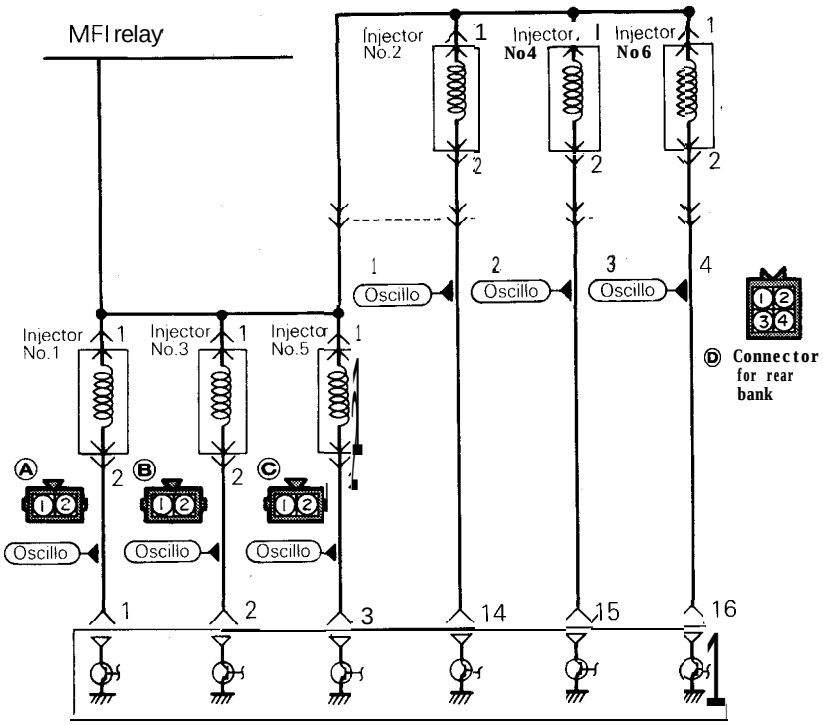

Engine control module connector

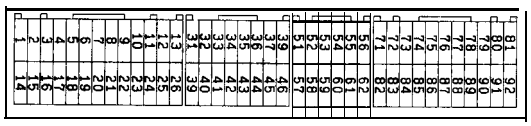

OPERATION

Refer to P.14A-136.

TROUBLESHOOTING HINTS

Refer to P.14A-137.

INSPECTION

Using Scan Tool

Function	Item No.	Data display	Check condition	Coolant temperature	Standard value
Data reading	41	Drive time*'	Engine: Cranking	0°C (32°F)*2	13.8 – 16.8 ms
				20°C (68°F)	40 – 48.8 ms
				80°C (176°F)	8.6 – 10.6 ms

Function	Item No.	Data display	Check condition	Engine state	Standard value
Data reading	41	Drive time*3	• Engine coolant temperature: 80 to 95°C (176 to 205°F) • Lights, electric cooling fan, accessory units: All OFF • Transaxle: Neutral (P range for vehicle with A/T) • Steering wheel: Neutral	700 rpm (Idle)	2.3 – 3.5 ms
				2,000 rpm	2.0 – 3.2 ms
				When sharp racing is made	To increase

NOTE
*1: The injector drive time refers to when the supply voltage is 11 V and the cranking speed is less than 250 rpm.
"2: When coolant temperature is lower than 0°C (32°F). injection is made by 6 cylinders simultaneously.
"3: When the vehicle is new [within initial operation of about 500 km (300 miles)], the injector drive time may be about 10% longer.

Function	Item No.	Drive content	Check condition	Normal state
Actuator test	01	No. 1 injector shut off	Engine: Idling after warm-up (Shut off the injectors in sequence during idling after engine warm-up, check the idling condition)	dle state to change further (becoming less stable or stalling)
	02	No. 2 injector shut off		
	03	No. 3 injector shut off		
	04	No. 4 injector shut off		
	05	No. 5 injector shut off		
	06	No. 6 injector shut off		

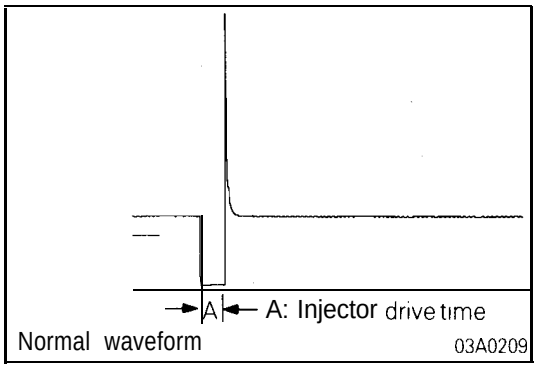

Using Oscilloscope

(1) Run the engine at idle speed.
(2) Connect the probe to the oscilloscope pick-up point as shown in the circuit diagram, and check the waveform at the drive side of each injector.

HARNESS INSPECTION

Refer to P.14A-138.

ACTUATOR INSPECTION

Refer to P.14A-139.

INJECTORS <Turbo>

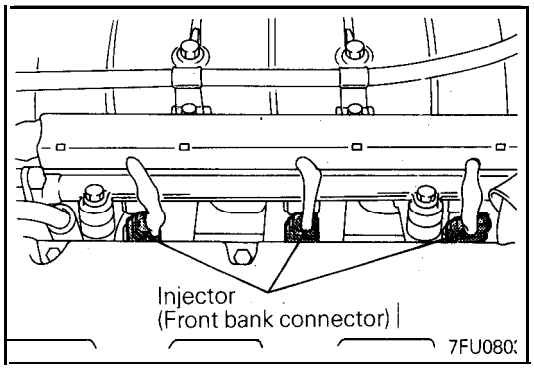

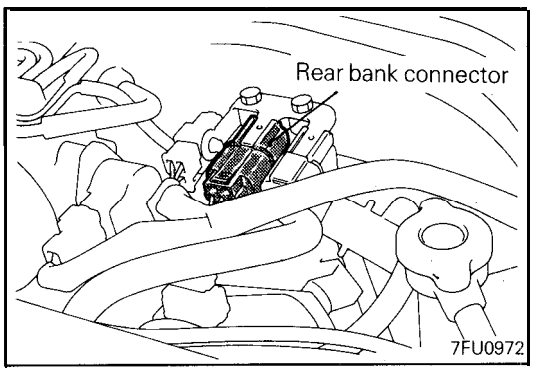

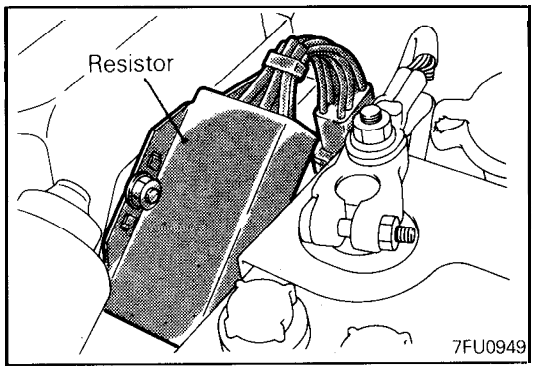

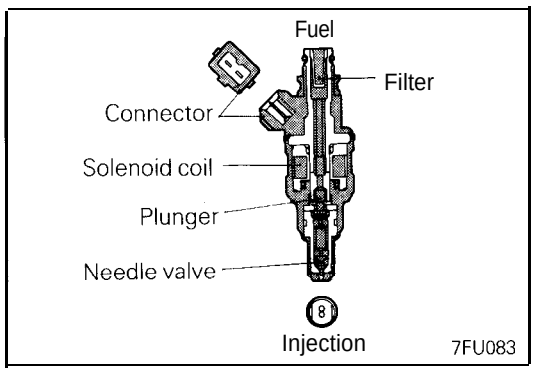

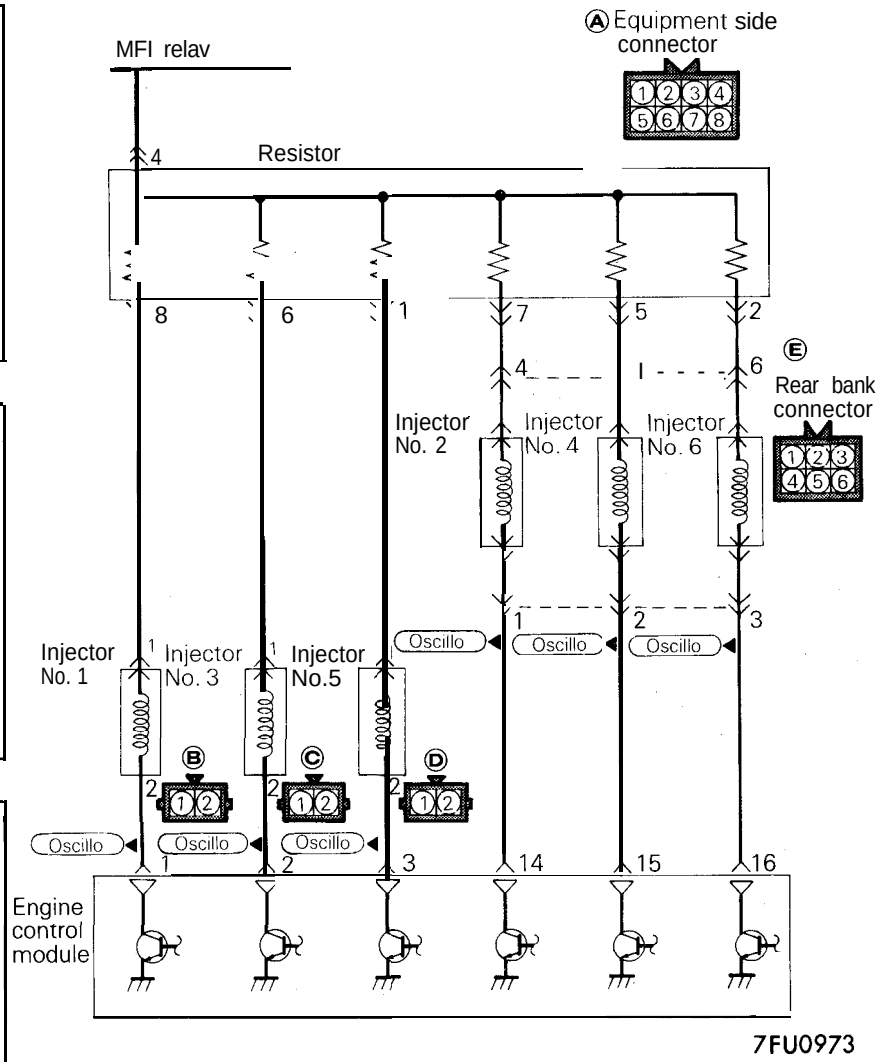

Engine control module connector

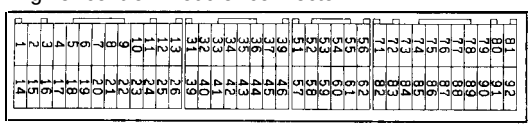

9FU0393

OPERATION

Refer to P.14A-136.

TROUBLESHOOTING HINTS

Refer to P.14A-137.

INSPECTION

lJsing Scan Tool

Function	Item No.	Data display	Check condition	Coolant temperature	Standard value
Data reading	41 (Rear bank) 47 (Front bank)	Drive time*1	Engine: Cranking	0°C (32°F)*2	8.8 – 10.8 ms
				20°C (68°F)	25.6-31.2 ms
				80°C (176°F)	5.5 – 6.7 ms

Function	Item No.	Data display	Check condition	Engine state	Standard value
Data reading	41 (Rear bank) 47 (Front bank)	Drive time*3	• Engine coolant temperature: 80 to 95°C (176 to 205°F) • Lamps, electric cooling fan, accessory units: All OFF • Transaxle: Neutral • Steering wheel: Neutral	700 rpm (Idle)	1.6-2.8 ms
				2,000 rpm	1.4-2.6 ms
				When sharp racing is made	To increase

NOTE
*1: The injector drive time refers to when the supply voltage is 11 V and the cranking speed is less than 250 rpm.
"2: When coolant temperature is lower than 0°C (32°F), injection is made by 6 cylinders simultaneously.
"3: When the vehicle is new [within initial operation of about 500 km (300 miles)], the injector drive time may be about 10% longer.

Function	Item No.	Drive content	Check condition	Normal state
Actuator test	01	No. 1 injector shut off	Engine: Idling after warm-up (Shut off the injectors in sequence during idling after engine warm-up, check the idling condition)	Idle state to change further (becoming less stable or stalling)
	02	No. 2 injector shut off		
	03	No. 3 injector shut off		
	04	No. 4 injector shut off		
	05	No. 5 injector shut off		
	06	No. 6 injector shut off		

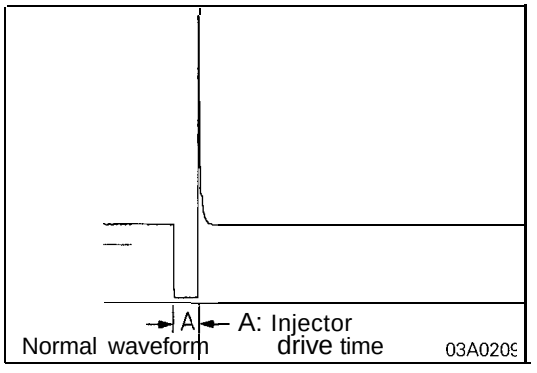

Using Oscilloscope

(1) Run the engine at idle speed.
(2) Connect the probe to the oscilloscope pick-up point as shown in the circuit diagram, and check the waveform at the drive side of each injector.

HARNESS INSPECTION

Refer to P.14A-138.

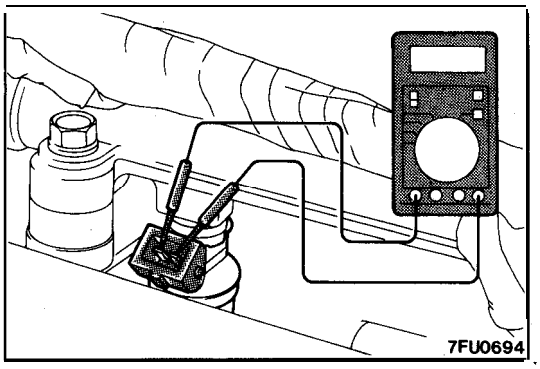

ACTUATOR INSPECTION

INJECTORS

Measurement of Resistance between Front Bank Terminals

(1) Disconnect the injector connector.
(2) Measure the resistance between terminals.

Standard value: 2 – 3 Ω [at 20°C (68°F)]

(3) Reconnect the injector connector.

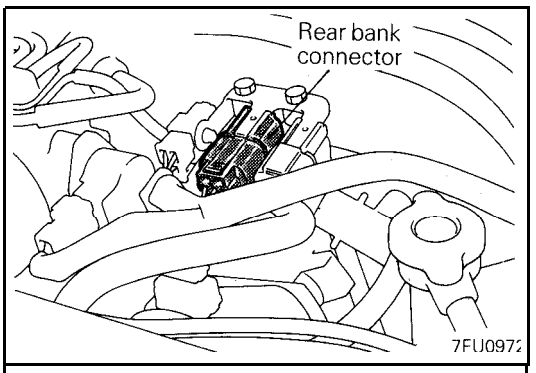

Measurement of Resistance between Rear Bank Terminals

(1) Disconnect the injector connector.
(2) Measure the resistance between terminals.

Standard value: 2 – 3 Ω [at 20°C (68°F)]

(3) Reconnect the injector connector.

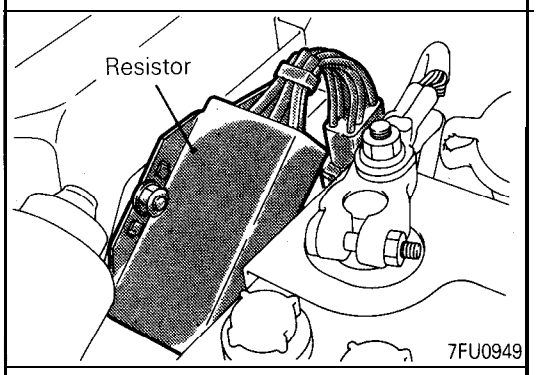

RESISTOR

Measurement of Resistance between Terminals

(1) Disconnect the resistor connector.

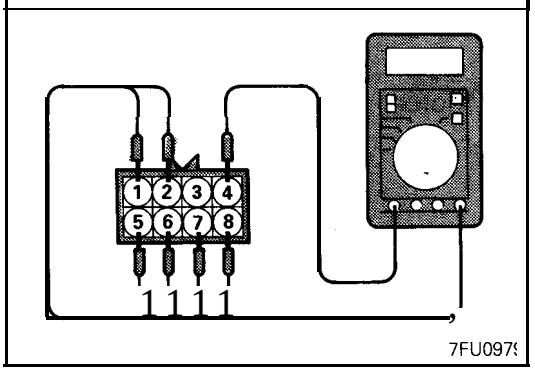

(2) Measure the resistance between terminals.

Measuring terminals	Resistance
1–4 2-4 5-4 6-4 7-4 8–4	5.5 – 6.5 Ω [At 20°C (68°F)]

(3) If the resistance is out of specification, replace the resistor

IDLE AIR CONTROL MOTOR (STEPPER MOTOR TYPE)

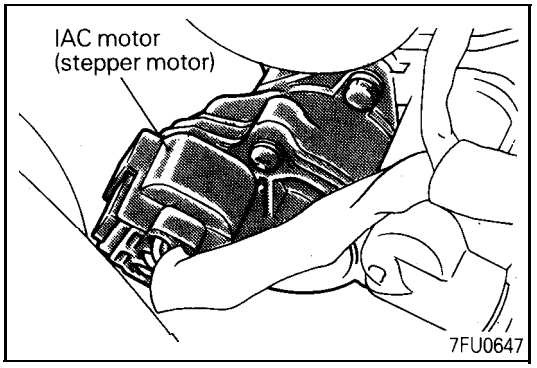

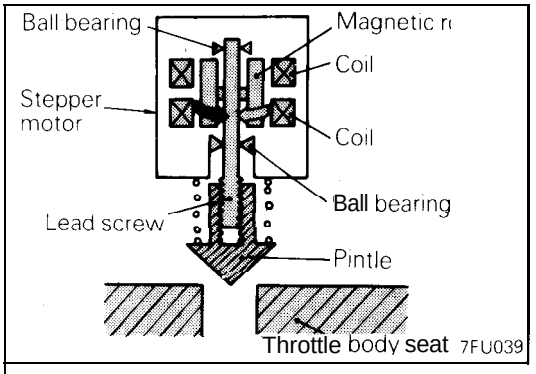

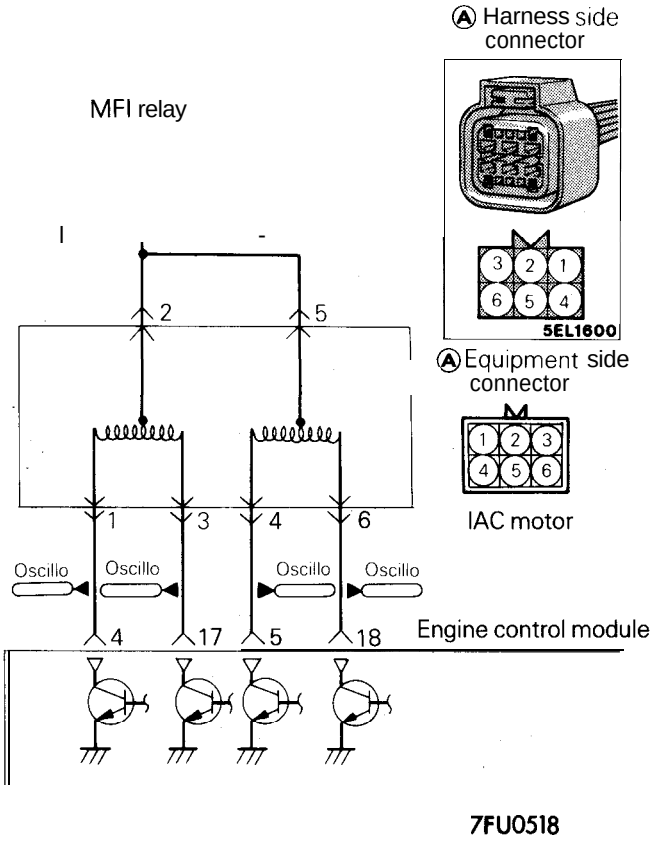

Engine control module connector

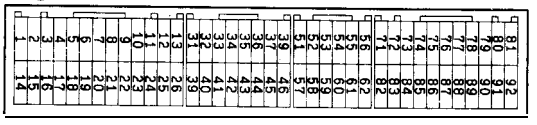

9FU0393

OPERATION

Refer to P.14A-141.

TROUBLESHOOTING HINTS

Refer to P.14A-141.

INSPECTION

Refer to P.14A-142

HARNESS INSPECTION

Refer to P.14A-143.

ACTUATOR INSPECTION

Refer to P.14A-143.

IGNITION COIL AND IGNITION POWER TRANSISTOR

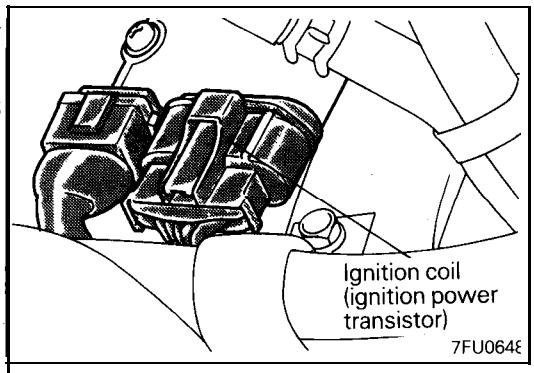

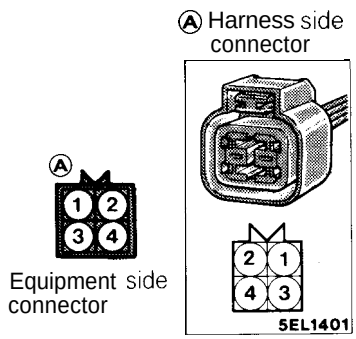

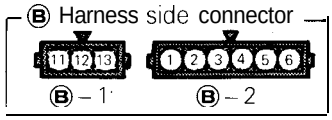

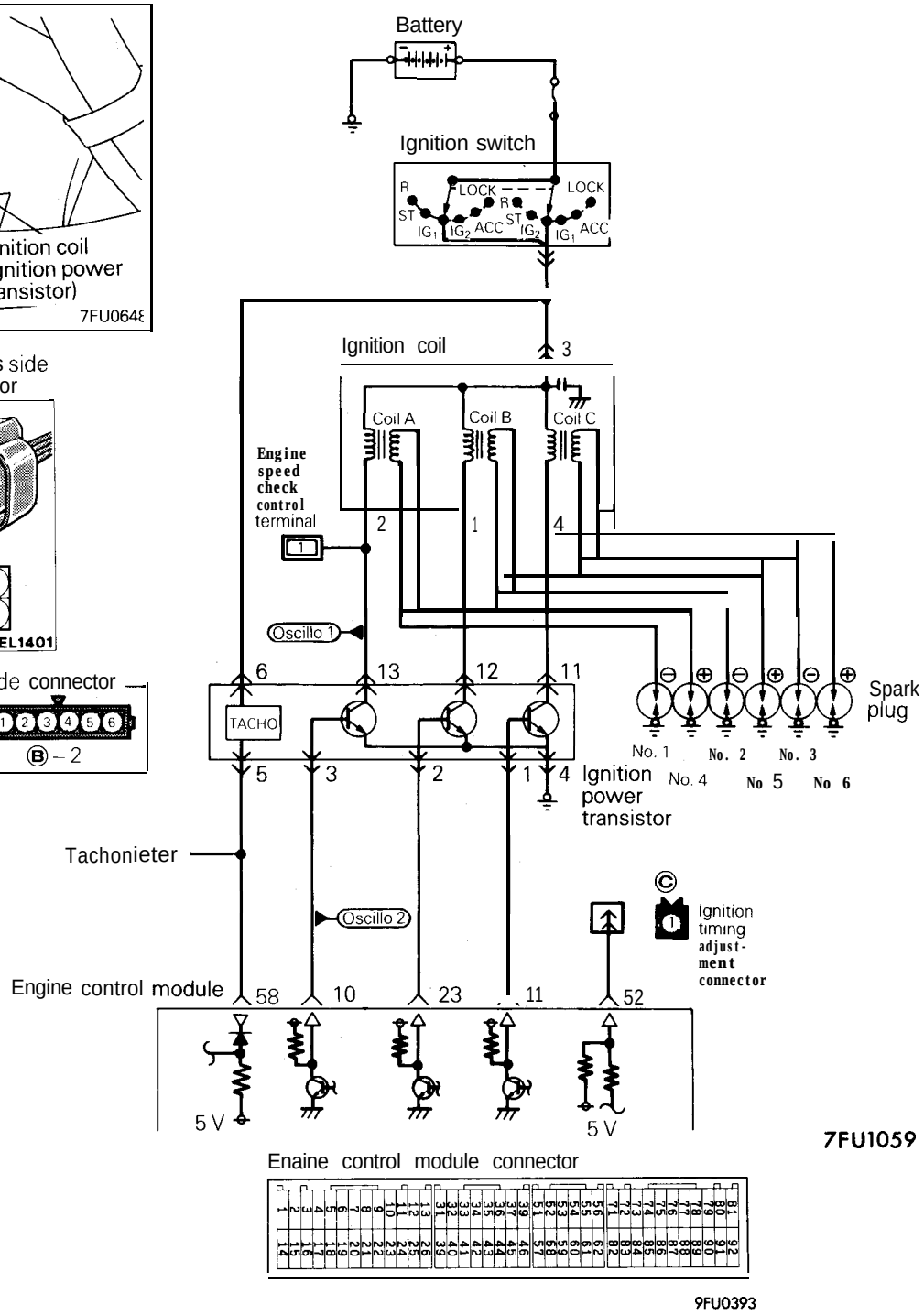

Enaine control module connector

9FU0393

OPERATION

Refer to P.14A-149.

INSPECTION

Using Scan Tool

<Spark Advance>

Function	Item No.	Data display	Check condition	Engine state	Standard value
Data reading	44	Ignition advance	• Engine: Warming up • Timing light: Set (set timing light to check actual ignition timing)	700 rpm (Idle)	7 – 23°BTDC
				2,000 rpm	30 – 50°BTDC <Non Turbo> 23 – 43°BTDC <Turbo>

<Ignition Timing Adjustment Mode>

Function	Item No.	Data display	Check condition	Terminal condition	Standard value
Data list	36	Continuity present or not present between ignition timing adjustment terminal and ground	• Engine: Idling	Ignition timing adjustment terminal is grounded	ON
				Ignition timing adjustment terminal is disconnected from ground	OFF

<Standard Ignition Timing>

Function	Item No.	Drive	Check condition	Normal condition
Actuator test	17	Set to ignition timing adjustment mode	• Engine: idling • Timing light: set	5°BTDC

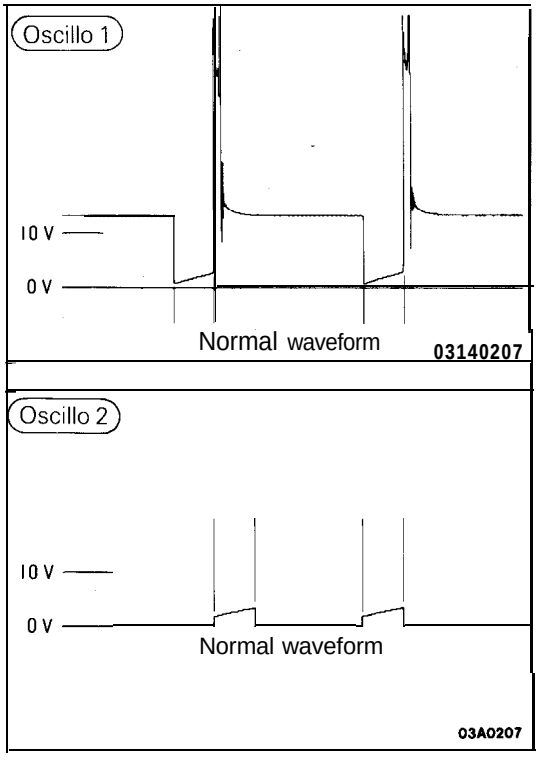

Using Oscilloscope

1. Primary signal of ignition coil
   (1) Run the engine at an idle speed.
   (2) Connect the probe to oscilloscope pick-up point 1 as shown in the circuit diagram, and check the primary signal of the ignition coil.

2. Control signal of ignition power transistor
   Connect the probe to oscilloscope pick-up point 2 as shown in the circuit diagram, and check the control signal of the ignition power transistor.

HARNESS INSPECTION

1

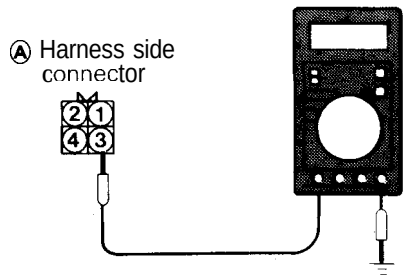

01 L0411

Measure the power supply voltage of the ignition coil.

- Connector: Disconnected
- Ignition switch: ON

Voltage (V)
B+

OK → 2

NG → Repair the harness. (Ⓐ3 – Ignition switch)

2

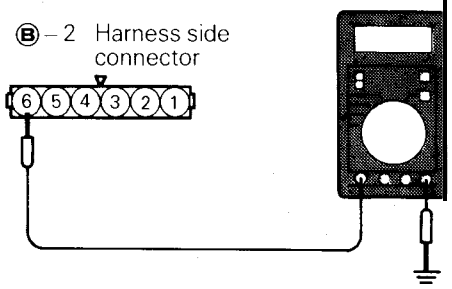

7FU0698

Measure the power supply voltage of the ignition coil.

- Connector: Disconnected
- Ignition switch: ON

Voltage (V)
B+

OK → 3

NG → Repair the harness. (Ⓑ6 – Ignition switch)

3

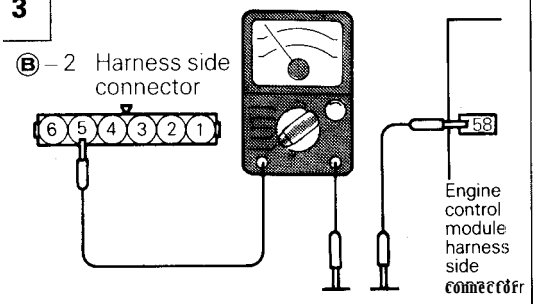

6FU1251

Check for an open-circuit, or a short-circuit to ground between the engine control unit and the ignition power transistor.

- Engine control module connector: Disconnected
- Ignition power transistor connector: Disconnected

OK → 4

NG → Repair the harness. (Ⓑ5 - [illegible])

4

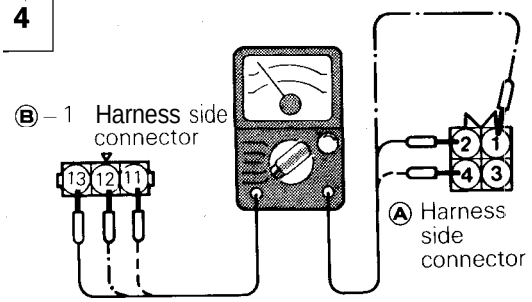

7FU0699

Check for an open-circuit, or a short-circuit to ground between the ignition power transistor and the ignition coil.

- Ignition coil connector: Disconnected
- Ignition power transistor connector: Disconnected

OK → 5

NG → Repair the harness.
(Ⓐ2 – Ⓑ13)
(Ⓐ1 – Ⓑ12)
(Ⓐ4 – Ⓑ11)

5 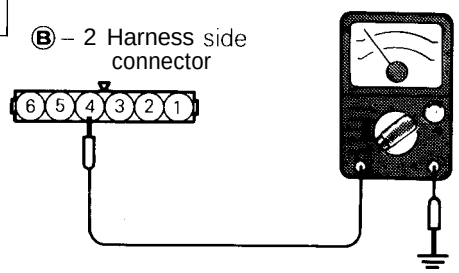 7FU0700	Check for continuity of the ground circuit, • Connector: Disconnected	OK →	6
		NG →	Repair the harness. (Ⓑ 4 – Ground)
6 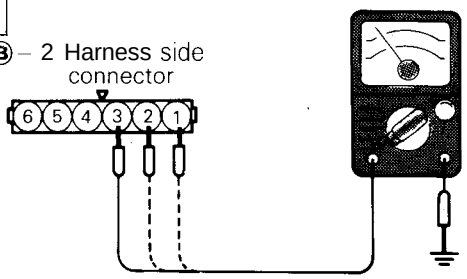 7FU0701	Measure the voltage of the control signal circuit of the ignition power transistor. • Connector: Disconnected • Ignition switch: START Voltage (V): 0.5 – 4.0	OK →	7
		NG →	Repair the harness. (Ⓑ 3 – 10) (Ⓑ 2 – 23) (Ⓑ 1 – 11)
7 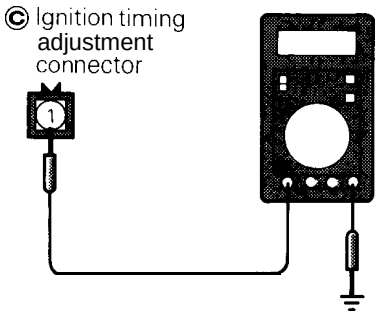 7FU1060	Measure the voltage of the ignition timing adjustment terminal. • Ignition switch: ON Voltage (V): 4.0 – 5.2	OK →	STOP
		NG →	Repair the harness. (Ⓒ 1 – 52)

ACTUATOR INSPECTION

Refer to GROUP 8 – Ignition System

EVAPORATIVE EMISSION PURGE SOLENOID

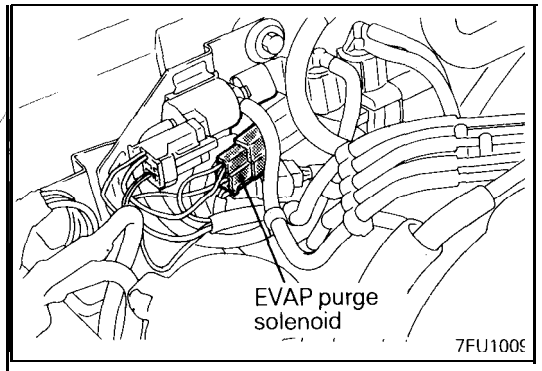

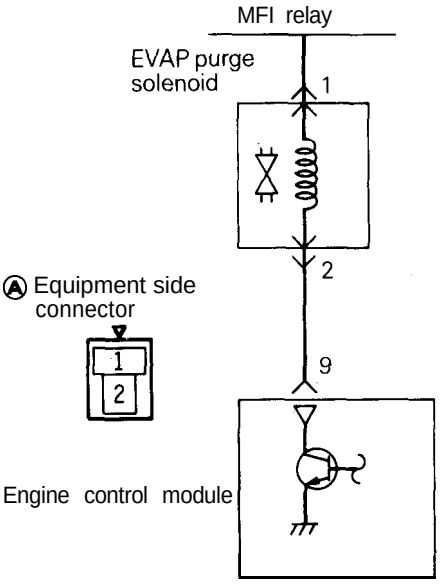

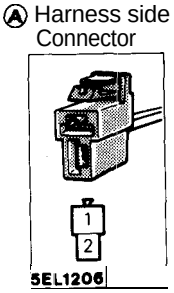

01A0324

Engine control module connector

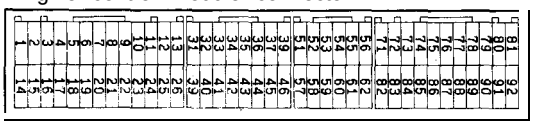

9FU0393

OPERATION

Refer to P.14A-153.

INSPECTION

Refer to P.14A-153.

HARNESS INSPECTION

Refer to P.14A-154.

ACTUATOR INSPECTION

Refer to GROUP 25 – Evaporative Emission Control System.

EGR SOLENOID

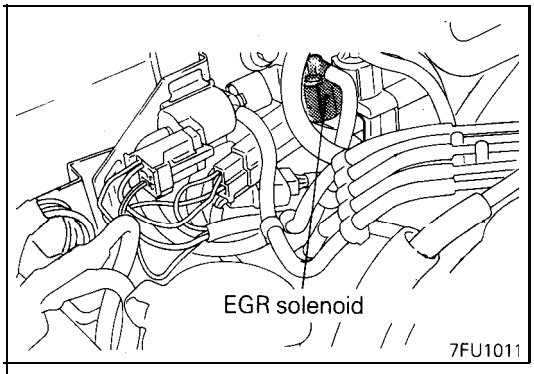

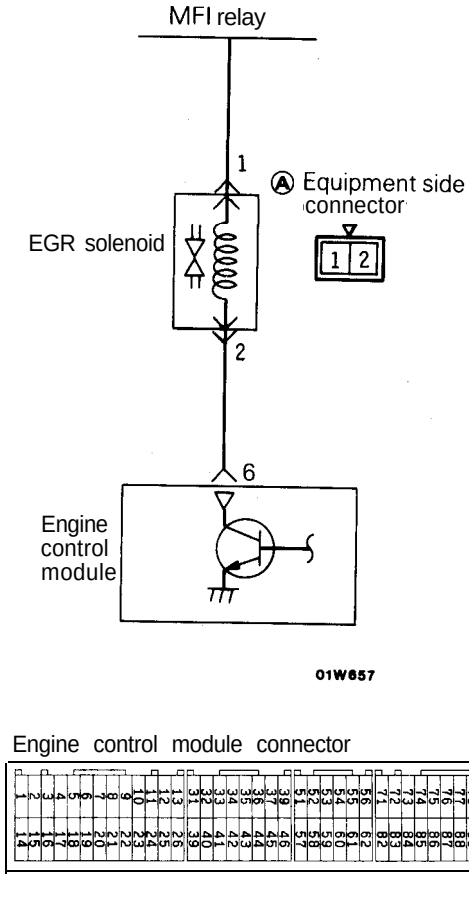

9FU0393

OPERATION

Refer to P.14A-155.

TROUBLESHOOTING HINT

Refer to P.14A-155.

INSPECTION

Refer to P.14A-156.

HARNESS INSPECTION

Refer to P.14A-156.

ACTUATOR INSPECTION

Refer to GROUP 25 – Exhaust Gas Recirculation (EGR) System.

FUEL PRESSURE SOLENOID <Turbo>

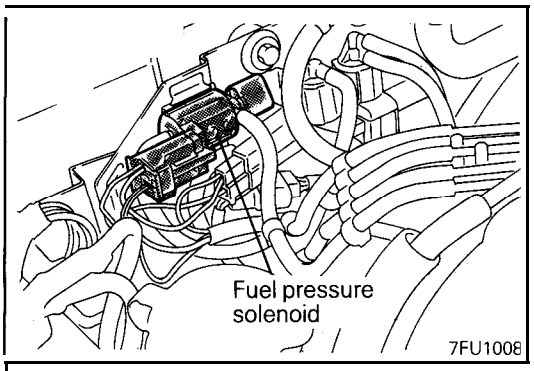

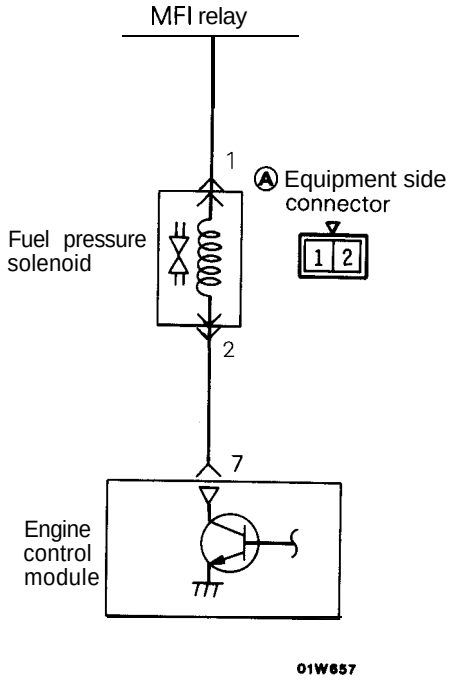

Engine control module connector

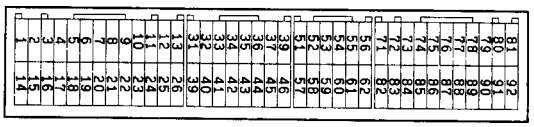

OPERATION

- The fuel pressure solenoid is an ON-OFF type solenoid valve that switches the pressure introduced to the fuel pressure regulator between either intake manifold pressure or barometric pressure.
- Battery power is supplied to this valve via the MFI relay. When the engine control module turns ON the internal power transistor, the coil is energized to allow barometric pressure to be introduced to the fuel pressure regulator.

INSPECTION

Using Scan Tool

Function	Item No.	Drive content	Check condition	Normal state
Actuator test	09	Turn solenoid valve from OFF to ON	Ignition switch: ON	Click heard when driven

HARNESS INSPECTION

1 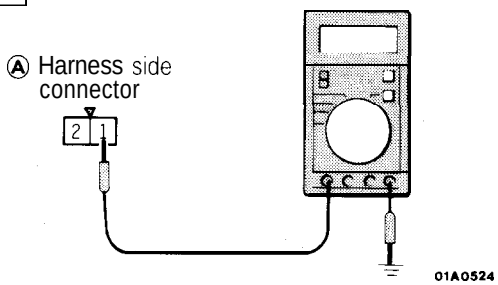 	Measure the power supply voltage. • Connector: Disconnected • Ignition switch: ON Voltage (V): B+	OK → 2 NG → Repair the harness. (Ⓐ2 – MFI relay)
2 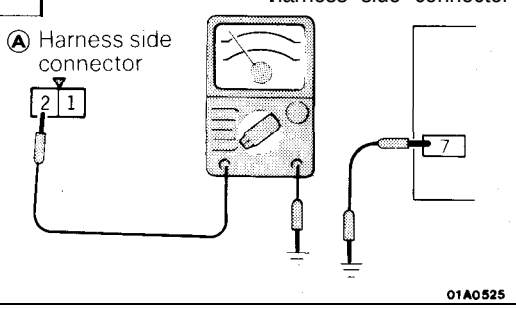 	Check for an open-circuit, or a short-circuit to ground, between the fuel pressure solenoid and the engine control module. • Engine control module connector: Disconnected • Fuel pressure solenoid connector: Disconnected	OK → STOP NG → Repair the harness. (Ⓐ1 – 7)

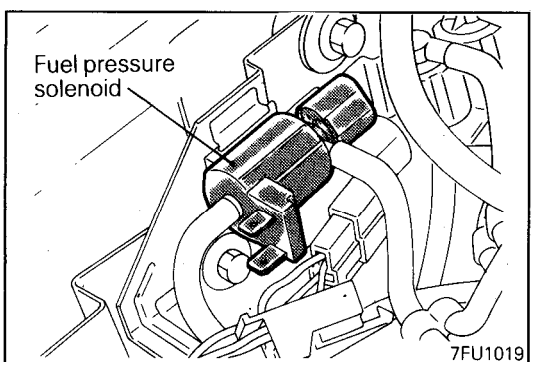

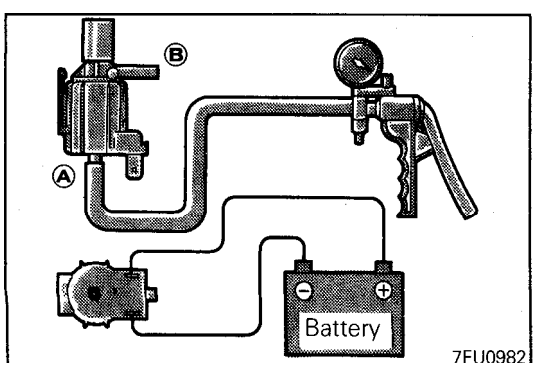

ACTUATOR INSPECTION

Operation Check

NOTE
Before disconnecting the vacuum hose, mark it to ensure reconnection at the correct position.

(1) Remove the vacuum hose (blue stripe on black) from the solenoid valve.
(2) Disconnect the harness connector.
(3) Apply a negative pressure to the nipple to which the black vacuum hose has been connected and check air-tightness with and without the battery voltage applied to the solenoid valve terminal.

Battery voltage	The other nipple of solenoid valve	Normal state
Not applied	Open	Negative pressure leaks
	Close with finger	Negative pressure is held
Applied	Open	Negative pressure is held

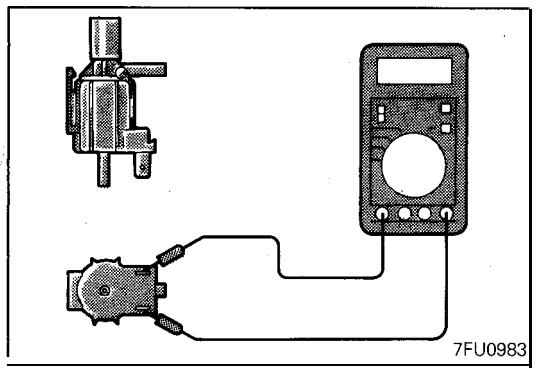

Coil Resistance Check

(1) Measure the coil resistance with a circuit tester

Standard value: 36 – 46 Ω [at 20°C (68°F)]

TURBOCHARGER WASTE GATE SOLENOID <Turbo>

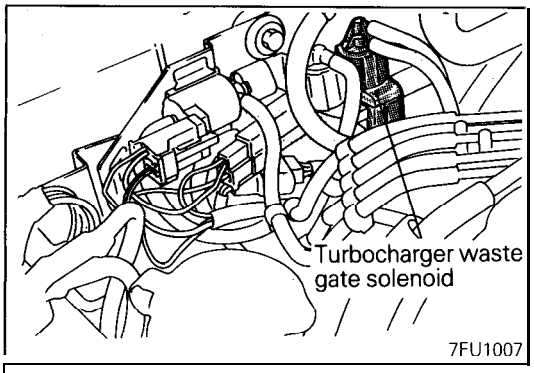

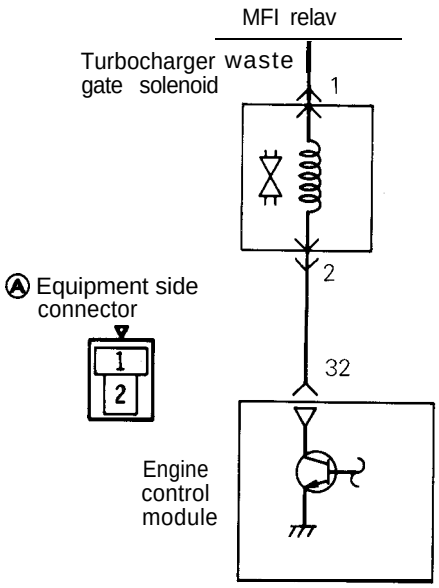

Engine control module connector

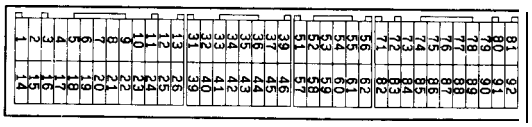

OPERATION

- The turbocharger waste gate solenoid is an ON-OFF type solenoid valve that controls the boost pressure that is introduced to the turbocharger waste gate actuator.
- Battery power is supplied to this valve via the MFI relay. When the engine control module turns ON the internal power transistor, the coil is energized to release part of the boost pressure applied to the turbocharger waste gate actuator.

TROUBLESHOOTING HINTS

If the turbocharger waste gate solenoid harness and the unit itself are normal, but poor acceleration or other abnormalities are experienced, the follwing problems are suspected.

(1) Faulty boost pressure control system
(2) Poor connection of intake air hose
(3) Faulty turbocharger or turbocharger waste gate actuator
(4) Clogged exhaust system

INSPECTION

Using Scan Tool

Function	Item No.	Drive content	Check condition	Normal state
Actuator test	12	Turn solenoid valve from OFF to ON	Ignition switch: ON	Click heard when driven

HARNESS INSPECTION

1	Ⓐ Harness side connector 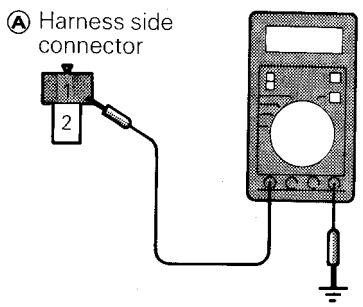 7FU0525	Measure the power supply voltage. • Connector: Disconnected • Ignition switch: ON Voltage (V): B+	OK → 2 ~~OK~~ → Repair the harness. (Ⓐ1 – MFI relay)
2	Ⓐ Harness side connector 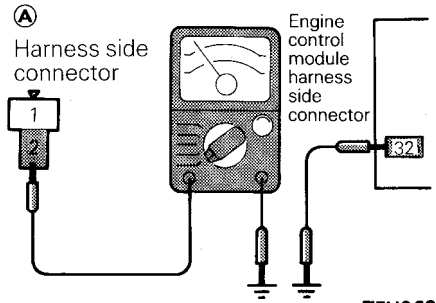 7FU0526	Check for an open-circuit, or a short-circuit to ground, between the turbocharger waste gate solenoid and the engine control module. • Turbocharger waste gate solenoid connector: Disconnected • Engine control module connector: Disconnected	OK → STOP ~~OK~~ → Repair the harness. (Ⓐ2 -)

ACTUATOR INSPECTION

Refer to GROUP 11.

BOOST METER <Turbo>

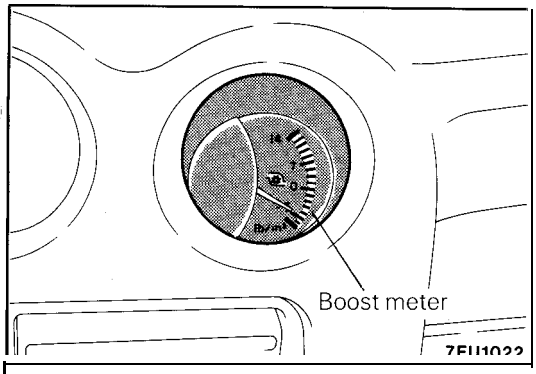

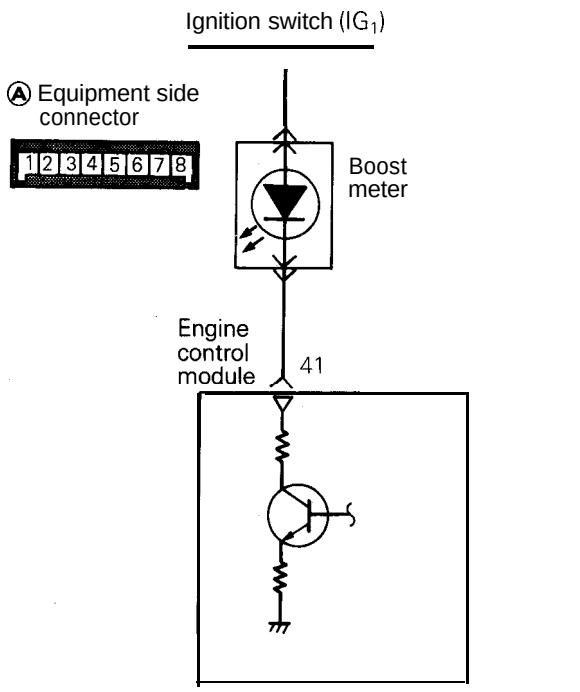

Engine control module connector

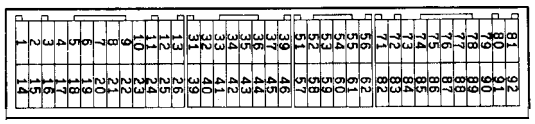

HARNESS INSPECTION

1 Ⓐ Harness side connector 8 7 6 5 4 3 2 1 7FU0986	Measure the power supply voltage. • Connector: Disconnected • Ignition switch: ON Voltage (V): B+	OK →	2
		NG →	Repair the harness. (Ⓐ 2 – Ignition coil [IG])
2 Ⓐ Harness side connector 8 7 6 5 4 3 2 1 Engine control module harness side connector 41 7FU0987	Check for an open-circuit or a short-circuit to ground, between the engine control module and the boost meter. • Boost meter connector: Disconnected • Engine control module connector: Disconnected	OK →	STOP
		NG →	Repair the harness. Ⓐ 3 -

ACTUATOR INSPECTION

Refer to GROUP 8.

ACTIVE EXHAUST CONTROL UNIT <Turbo>

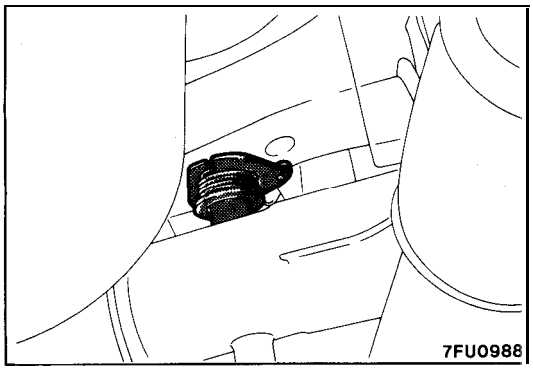

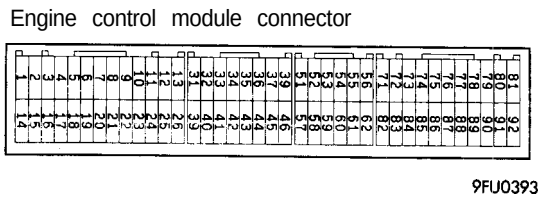

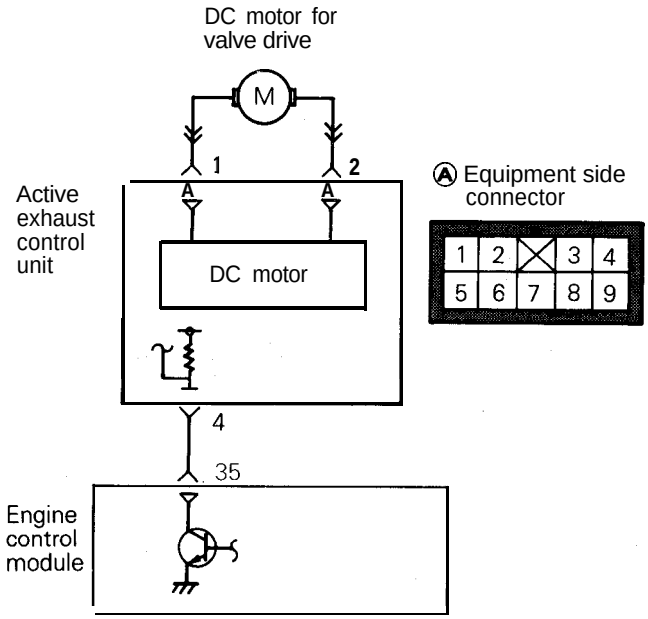

OPERATION

- Muffler noise is controlled by opening and closing the valve provided inside the main muffler.
- The valve is opened or closed by turning the DC motor in the normal or reverse direction.
- The DC motor is driven in the normal or reverse direction by changing the direction of power flow by the motor driving IC in the active exhaust control unit.
- The active exhaust control module opens and closes the valve when it receives the signal produced by the engine control unit.

HARNESS INSPECTION

1	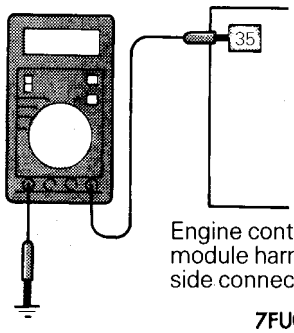	Measure the input voltage of engine control module. • Engine control module connector: Disconnected • Ignition switch: ON Voltage (V): B+	OK → STOP NG → Repair the harness. (Ⓐ4 – 35)

ACTUATOR INSPECTION

Refer to GROUP 11.

VARIABLE INDUCTION CONTROL MOTOR (DC MOTOR) <Non Turbo>

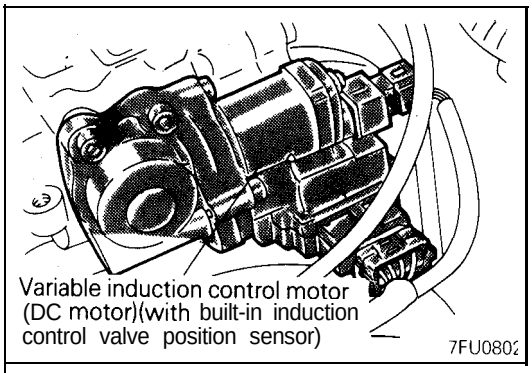

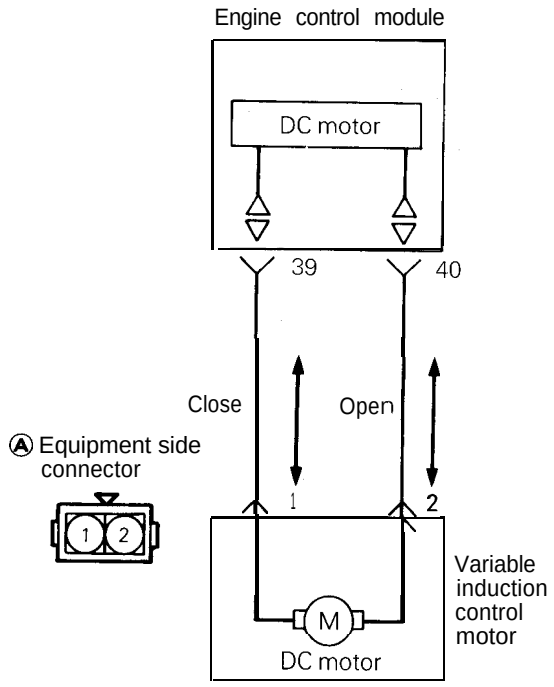

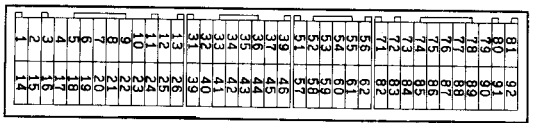

OPERATION

Refer to P.14A-157.

INSPECTION

Refer to P.14A-157.

HARNESS INSPECTION

1 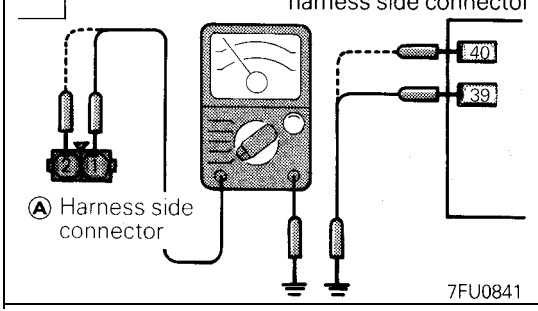	Check for an open-circuit or a short-circuit to ground, between the engine control module and the variable induction control motor connector. • Variable induction control motor connector: Disconnected • Engine control module connector: Disconnected	OK →	STOP
		OK →	Repair the harness. (Ⓐ 1 – 39) (Ⓐ 2 – 40)

ACTUATOR INSPECTION

Refer to GROUP 11.

ANTI-LOCK BRAKING SIGNAL <Turbo>

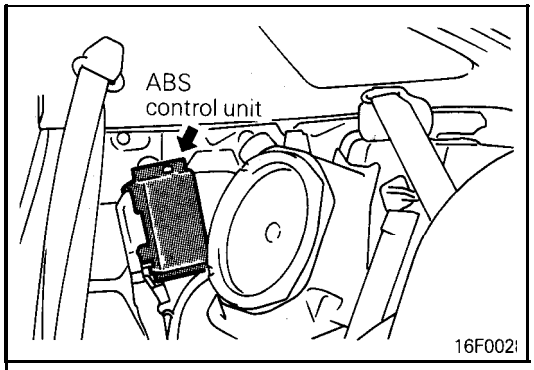

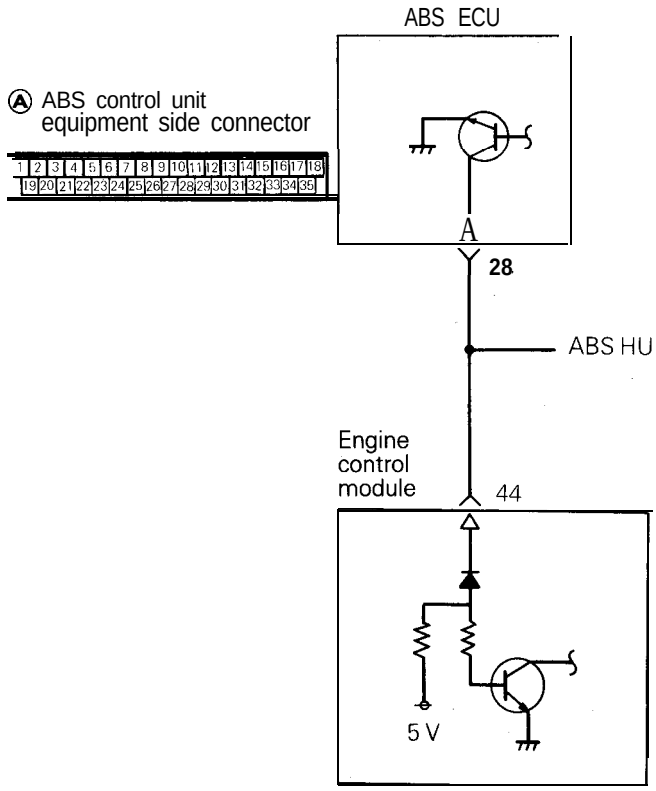

Engine control module connector

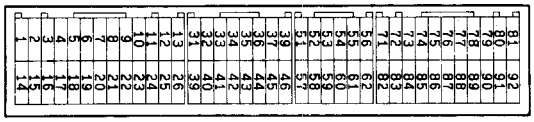

9FU0393

6FU1542

OPERATION

- The anti-lock braking signal is input to the engine control module from the anti-lock braking system (ABS) control module as a signal to indicate whether or not the motor relay is activated. Based on this signal, the engine control module controls the idle air control motor to secure effective anti-lock braking.
- When the motor relay is activated, the ABS control unit turns ON the power transistor, short-circuiting the terminal to ground. This causes the anti-lock braking signal to go from high to low.

HARNESS INSPECTION

1 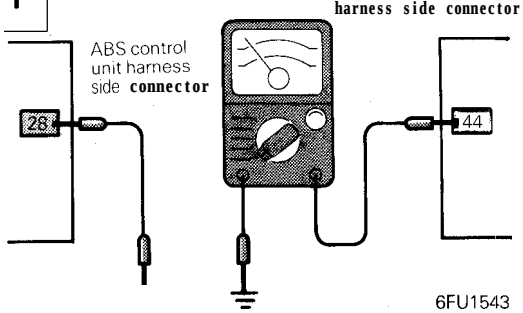 6FU1543	Check for an open-circuit or a short-circuit to ground, between the ABS control unit and the engine control module. • ABS control unit connector: Disconnected • Engine control module connector: Disconnected	OK → STOP NG → Repair the harness. (Ⓐ28 – 44)

ENGINE AND TRANSAXLE TOTAL CONTROL SIGNAL <A/T>

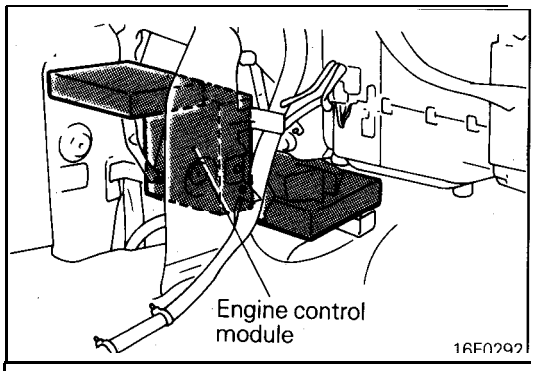

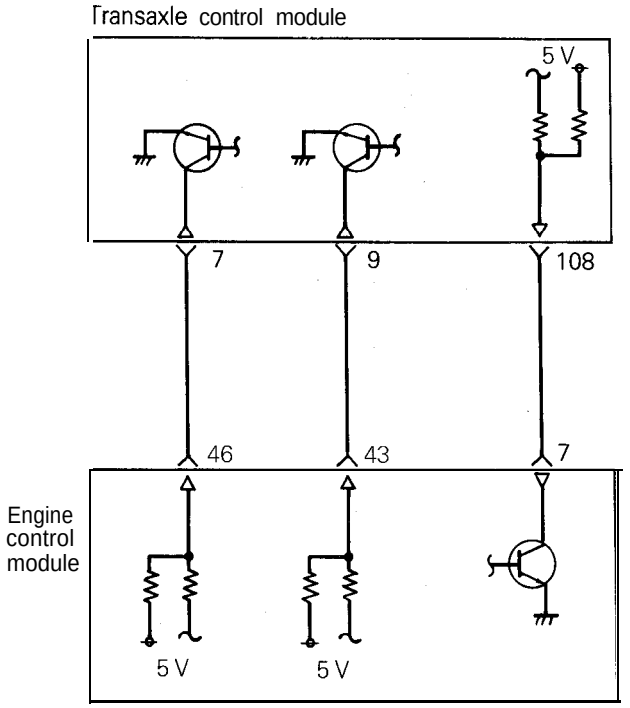

7FU0843

Ⓐ Transaxle control module connector

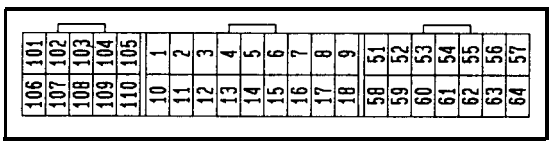

7FU0903

'Engine control module connector

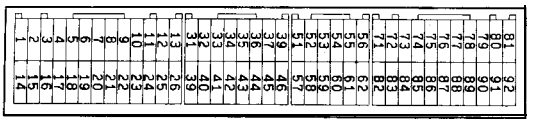

9FU0393

OPERATION

- Three communication lines are connected between the engine control module and the transaxle control module to send and receive the engine and transaxle total control signal.
- If the transistor inside the engine control module changes from OFF to ON by the command of the engine control module, the terminal having a voltage of 5 V applied to it from the transaxle control module is grounded in the engine control module.
  This will change the terminal voltage of the transaxle control module from HIGH to LOW.
  If the transistor fitted inside the engine control module changes from ON to OFF, the terminal, having applied to it a voltage of 5 V from the transaxle control module and grounded in the engine control module, is released and the terminal voltage of the transaxle control module changes from LOW to HIGH.
  In this way, the terminal voltage of the transaxle control module is controlled by ON/OFF operation of the transistor inside the engine control module in order to send signal.
  On the other hand, the transaxle control module also controls the terminal voltage of the engine control module by the ON/OFF operation of the transistor fitted inside the transaxle control module in order to send signal. In this way, the engine and transaxle send control signal to each other.

HARNESS INSPECTION

1 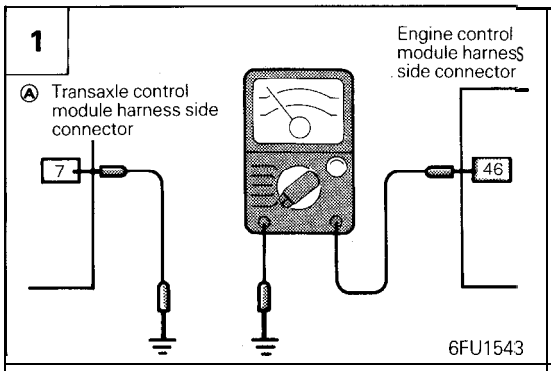 	Check for an open-circuit, or a short-circuit to ground between the transaxle control module and the engine control module. • Transaxle control module connector: Disconnected • Engine control module connector: Disconnected	OK NG	→ 2 → Repair the harness. (Ⓐ7 -)
2 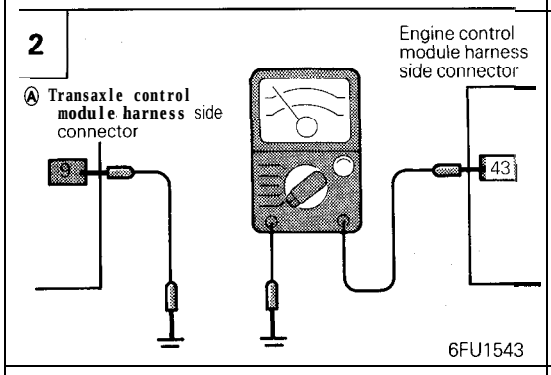 	Check for an open-circuit, or a short-circuit to ground between the transaxle control module and the engine control module. • Transaxle control module connector: Disconnected • Engine control module connector: Disconnected	OK NG	→ 3 → Repair the harness. (Ⓐ9 – 43)
3 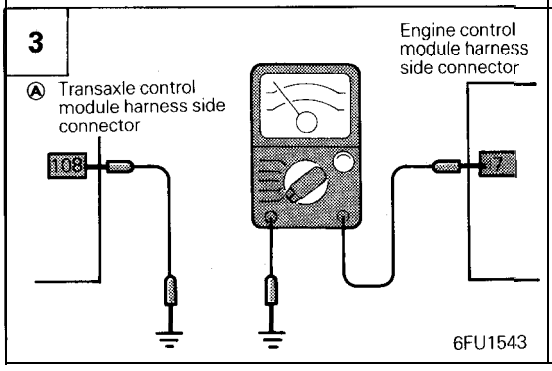 	Check for an open-circuit, or a short-circuit to ground between the transaxle control module and the engine control module. • Transaxle control module connector: Disconnected • Engine control module connector: Disconnected	OK NG	→ STOP → Repair the harness. (Ⓐ108 – 7)

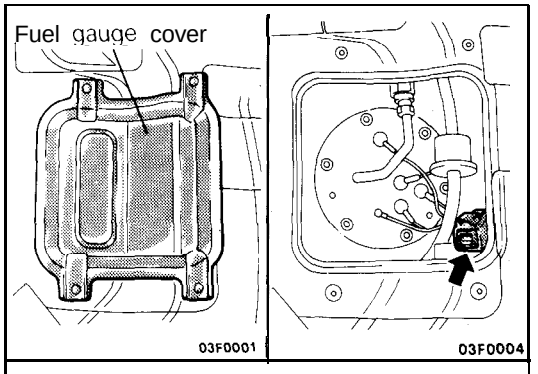

RELEASE OF RESIDUAL PRESSURE FROM HIGH PRESSURE FUEL HOSE

Make the following operations to release the pressure remaining in fuel pipe line so that fuel will not flow out.

(1) Remove the fuel gauge cover in the luggage compartment.
(2) Disconnect the fuel pump harness connector.
(3) Start the engine and after it stops by itself, turn the ignition switch to OFF.
(4) Connect the fuel pump harness connector.

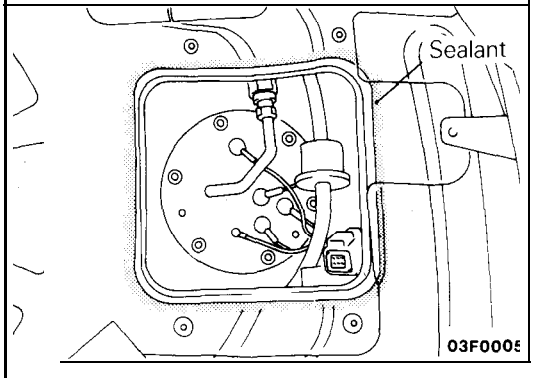

(5) Apply the specified sealant to the rear floor pan.

Specified sealant: 3M ATD Part No. 8509 or equivalent

(6) Install the fuel gauge cover.

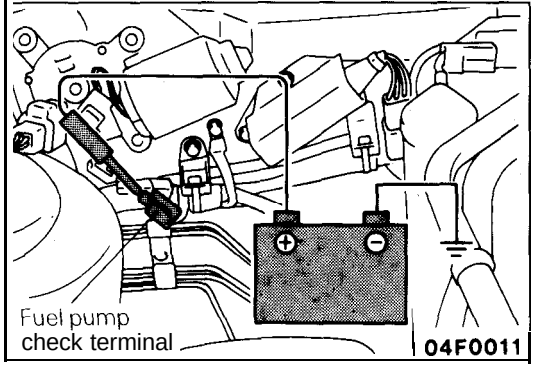

FUEL PUMP OPERATION CHECK

(1) Set the ignition switch at OFF.
(2) Check that when the battery voltage is directly applied to the fuel pump check terminal (black), the operating sound of the pump can be heard.

NOTE
Since the fuel pump is installed in the fuel tank, its operating sound cannot be readily heard. Remove the fuel tank cap and listen to the operating sound through the filter port.

(3) Hold the high pressure fuel hose between your fingers and check that the fuel pressure can be felt.

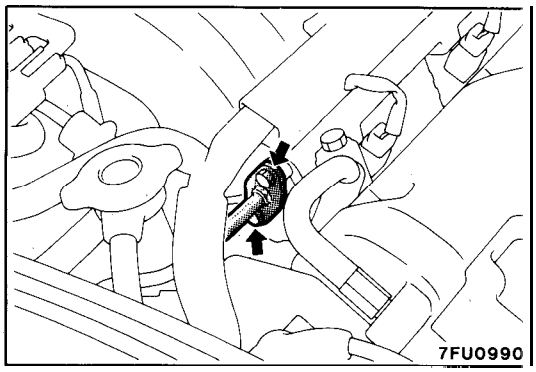

FUEL PRESSURE TEST

(1) Reduce the internal pressure of the fuel pipes and hoses.
(2) Disconnect the fuel high pressure hose at the fuel rail side.

Caution
Cover the hose connection with rags to prevent splash of fuel that could be caused by some residual pressure in the fuel pipe line.

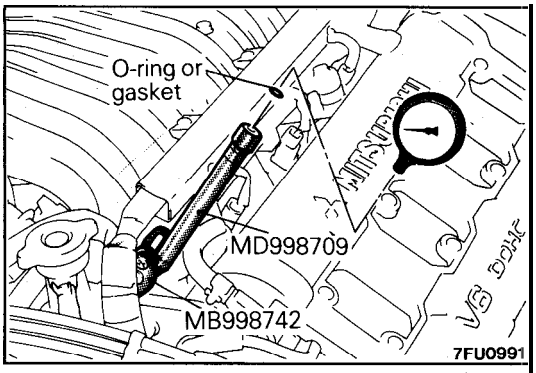

(3) Set a fuel pressure gauge on the special tool, placing an adequate O-ring or gasket between the gauge and special tool prevent fuel leaks.
(4) Attach the special tool set in step (3) to the fuel rail between high pressure hoses.

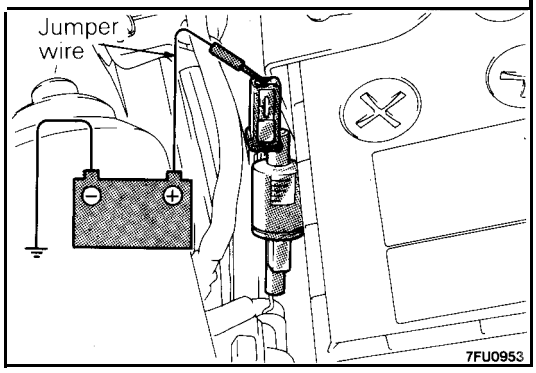

(5) Connect a jumper wire to the terminal for activation of the fuel pump and to the positive ⊕ terminal of the battery to activate the fuel pump. With fuel pressure applied, check to be sure that there is no fuel leakage from the fuel pressure gauge and the special tool connection part.
(6) Disconnect the jumper wire (from the terminal for activation of the fuel pump) to stop the fuel pump.
(7) Start the engine and let it idle.

(8) Measure the fuel pressure during idling..

Standard value:

<Non Turbo>	**Approx. 270 kPa (38 psi) at curb idle**
<Turbo>	**Approx. 235 kPa (34 psi) at curb idle**

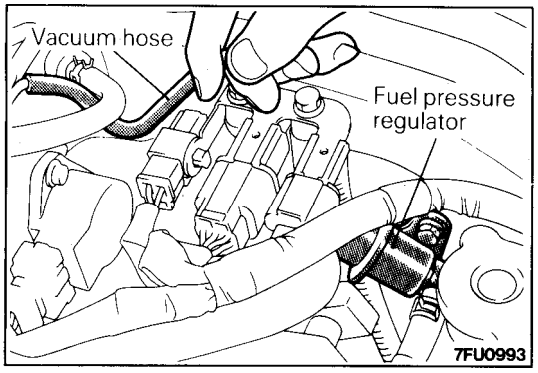

(9) Disconnect the vacuum hose from the fuel pressure regulator, and then measure the fuel pressure while using a finger to plug the end of the hose.

Standard value:
<Non Turbo> 330 – 350 kPa (47 – 50 psi) at curb idle
<Turbo> 295 – 315 kPa (43 – 45 psi) at curb idle

(10) Check to be sure that the fuel pressure during idling does not decrease even after the engine is raced a few times.

(11) Use a finger to gently press the fuel return hose while repeatedly racing the engine, and check to be sure that there is fuel pressure in the return hose also.

NOTE
There will be no fuel pressure in the return hose if there is insufficient fuel flow.

(12) If the fuel pressure measured in steps (8) to (11) deviates from the standard value range, check for the probable cause by referring to the table below, and then make the appropriate repair.

Condition	Probable cause	Remedy
• Fuel pressure is too low. • Fuel pressure drops during racing. • No fuel pressure in fuel return hose.	Fuel filter is clogged.	Replace the fuel filter.
	Malfunction of the valve seat within the fuel pressure regulator, or fuel leakage to return side caused by spring deterioration.	Replace the fuel pressure regulator.
	Fuel pump low discharge pressure.	Replace the fuel pump.
Fuel pressure is too high.	The valve within the fuel pressure regulator is sticking.	Replace the fuel pressure regulator.
	Clogging of the fuel return hose and/ or the pipe.	Clean or replace the hose and/or pipe.
No change of the fuel pressure when the vacuum hose is connected and when not connected.	Damaged vacuum hose or nipple clogging.	Replace the vacuum hose, or clean the nipple.
	Malfunction of the fuel pressure control system <Turbo>	Checking the fuel pressure control system <Turbo>

(13) Stop the engine and check for a change of the value indicated by the fuel pressure gauge. The condition is normal if there is no decrease of the indicated value within two minutes.
If there is a decrease of the indicated value, monitor the speed of the decrease, and, referring to the table below, determine the cause of the problem and make the appropriate repair.

Condition	Probable cause	Remedy
After the engine is stopped, the fuel pressure drops gradually.	Injector leakage.	Replace the injector.
	Leakage at the fuel pressure regulator valve seat.	Replace the fuel pressure regulator.
There is a sudden sharp drop of the fuel pressure immediately after the engine is stopped.	The check valve (within the fuel pump) is not closed.	Replace the fuel pump.

(14) Reduce the internal pressure of the fuel pipes and hoses.
(15) Disconnect the fuel pressure gauge and the special tools from the delivery pipe.

Caution
Because there will be some residual pressure in the fuel pipe line, use a shop towel to cover so that fuel doesn't splatter.

(16) Replace the O-ring at the end of the fuel high-pressure hose with a new one.
(17) After connecting the fuel high-pressure hose to the fuel rail, tighten the installation bolt at the specified torque.

Tightening torque: 5.0 Nm (3.6 ft.lbs.)

(18) Check to be sure that there is no fuel leakage.
① Apply battery voltage to the terminal for activation of the fuel pump so as to activate the fuel pump.
② With fuel pressure applied, check for leakage of the fuel line.

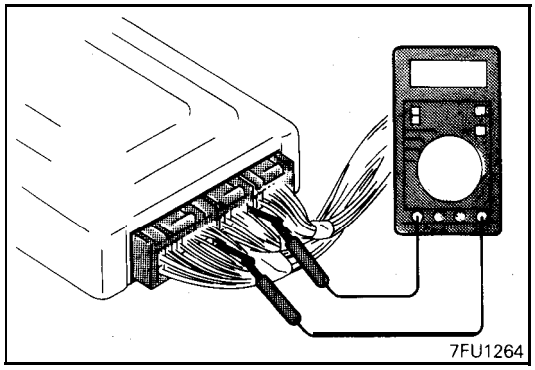

ENGINE CONTROL MODULE (ECM) TERMINAL VOLTAGES INSPECTION

(1) Connect a very thin wire probe (such as a paper clip) to the probe of the voltmeter.
(2) Insert the very thin probe from the wire side into contact with each of the terminals of the ECM connector and check the voltage, while referring to the check chart.

NOTE
1. Measure a voltage with the ECM connector connected.
2. Measure the voltage between each terminal and the No. 26 terminal (ground terminal).
3. Withdraw the ECM for easier access to the connector terminals.
4. The inspection need not be performed in the order of the chart.

Caution
Short-circuiting the positive (+) probe between a connector terminal and ground could cause damage to the vehicle wiring, sensors or ECM, or all of them. Use care to prevent it!

(3) If the voltmeter shows any deviation from the standard value, check the corresponding sensor, actuator and related electrical wiring, then repair or replace.
(4) After repair or replacement, recheck with the voltmeter to confirm that the problem has cleared completely.

TERMINAL VOLTAGE CHECK CHART

Engine Control Module Connector Terminal Configuration

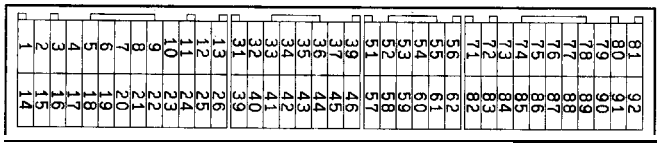

9FU0393

Terminal No.	Check point	Check conditions (Engine conditions)	Standard value	Remarks
80	Back-up power supply	Ignition switch: OFF	B+	
12	Power supply	Ignition switch: ON	B+	
25				
82	Ignition switch IG	Ignition switch: ON	B+	
38	MFI relay (power supply)	Ignition switch: OFF	B+	
		Ignition switch: ON	0 – 3V	
8	MFI relay (fuel pump)	Ignition switch: ON	B+	
		Engine: Idle	0 – 3V	
81	Sensor impressed voltage	Ignition switch: ON	4.5 – 5.5V	

Terminal No.	Check point	Check conditions (Engine conditions)		Standard value	Remarks
90	Volume air flow sensor	Engine: Idle		2.2 – 3.2V	
		Engine: 2,000 rpm			
19	Volume air flow sensor reset signal	Engine: Idle		0 – 1V	
		Engine: 3,000 rpm		6 – 9V	
72	Intake air temperature sensor	Ignition switch: ON	When intake temperature is 0°C (32°F)	3.2 – 3.8V	
			When intake temperature is 20°C (68°F)	2.3 – 2.9V	
			When intake temperature is 40°C (104°F)	1.5 – 2.1V	
			When intake temperature is 80°C (176°F)	0.4 – 1.0V	
85	Barometric pressure sensor	Ignition switch: ON	When altitude is 0 m (0 ft.)	3.7 – 4.3V	
			When altitude is 1,200 m (3,937 ft.)	3.2 – 3.8V	
83	Water temperature sensor	Ignition switch: ON	When water temperature is 0°C (32°F)	3.2 – 3.8V	
			When water temperature is 20°C (68°F)	2.3 – 2.9V	
			When water temperature is 40°C (104°F)	1.3 – 1.9V	
			When water temperature is 80°C (176°F)	0.3 – 0.9V	
84	Throttle position sensor	Ignition switch: Kept in ON state for more than 15 seconds	Idle	0.3 – 1.0V	
			Wide open throttle	4.5 – 5.5V	
87	Closed throttle position switch	Ignition switch: ON	Throttle valve placed in idle position	0 – 1V	
			Throttle valve placed in slightly opened position	4V or more	
88	Camshaft position sensor	Engine: Cranked		0.2 – 3.0V	
		Engine: Idle			
89	Crankshaft position sensor	Engine: Cranked		0.2 – 3.0V	
		Engine: Idle			
71	Ignition switch-ST	Engine: Cranked		8V or more	M/T
91	Park/Neutral position switch	Ignition switch: ON	Selector lever set to P or N	o - 3 v	A/T
			Selector lever set to D, 2, L or R	8 – 14V	

Terminal No.	Check point	Check conditions (Engine conditions)		Standard value	Remarks
86	Vehicle speed sensor	• Ignition switch: ON • Move the vehicle slowly forward		0 ↔ 5V (Changes repeated)	
37	Power steering pressure switch	Engine: Idle, warm	Steering wheel placed in neutral (straight ahead) position	B+	
			Steering wheel turned half a turn	0 – 3V	
45	Air conditioning switch 1	Engine: Idle	Air conditioning switch set to OFF	0 – 3V	
			Air conditioning switch set to ON (Air conditioning compressor in driven state)	B+	
59	Air conditioning switch 2	Engine: Idle	Air conditioning switch set to OFF	0 – 3V	
			• Air conditioning switch set to ON • Indoor set temperature brought closer to atmospheric temperature	B+	
22	Air conditioning relay	• Engine: Idle • Air conditioning switch: OFF → ON (Air compressor in driven state)		B+ or 6V or more for a moment → 0 – 3V	
21	Fan motor relay (Lo)	Radiator fan not operating [Coolant temperature: below 90°C (194°F)]		B+	
		Radiator fan operating at low speeds [Coolant temperature: 95 – 105°C (203 – 221 °F)]		0 – 3V	
20	Fan motor relay (Hi)	Radiator fan not operating [Coolant temperature: below 90°C (194°F)]		B+	
		Radiator fan operating at high speeds [Coolant temperature: above 105°C (221 °F)]		o - 3 v	
24	Electric load switch	Engine: Running at idle	Lighting switch set to OFF	0 – 3V	
			Lighting switch set to ON	B+	
75 76	Heated oxygen sensor (front)	Engine: Warm, 2,000 rpm (Check using a digital type voltmeter.)		0 ↔ 0.8V (Changes repeatedly)	<All models>
60 79	Heated oxygen sensor (rear)	• Transaxle: 2nd gear <M/T>, L range <A/T> • Drive with wide open throttle • Engine 3,500 rpm or more		0.6 – 1.0 V	<California>
1	No. 1 injector	Engine: Running at idle after warmup, and accelerated abruptly by depressing accelerator pedal		Falls temporarily a little from 11 – 14V.	
14	No. 2 injector				
2	No. 3 injector				
15	No. 4 injector				
3	No. 5 injector				
16	No. 6 injector				

Terminal No.	Check point	Check conditions (Engine conditions)		Standard value	Remarks
4	Stepper motor coil <Al >	Engine: Warm Check immediately after hot restart.		B+ ↑ ↓ 0 – 3V (Changed repeated)	
17	Stepper motor coil <A2>				
5	Stepper motor coil <B1>				
18	Stepper motor coil <B2>				
10	Ignition power transistor unit A	Engine speed: 3,000 rpm		0.3 – 3V	
23	Ignition power transistor unit B				
11	ignition power transistor unit C				
9	Evaporative emission purge solenoid	Ignition switch: ON		B+	
		Engine: Warm, 3,000 rpm		o - 3 v	
7	Fuel pressure solenoid	Ignition switch: ON		B+	Turbo
		Engine: From cranking to idling (within approx. 2 minutes)		o - 3 v ↓ B+	
32	Turbocharger waste gate solenoid	Ignition switch: ON		B+	Turbo
		Engine: Idle (when the premium gasoline is used)		o - 3 v	
41	Turbo meter	Ignition switch: ON		4 – 13v	Turbo
		Engine: Depress the accelerator pedal abruptly while the engine is idling		Falls temporarily from B+	
31	Fuel pump relay 2	Engine: Depress the accelerator pedal abruptly while the engine is idling		Rises temporarily from 0 – 3V	Turbo
58	Engine ignition signal	Engine: 3,000 rpm		0.3 – 3V	
35	Valve opened or closed indication signal	Muffler mode changeover switch: ON	Engine: Idle	o - 3 v	Turbo
			Engine: 4,500 rpm	B+	
34	Muffler mode changeover switch	Ignition switch: ON	Changeover switch set to ON (TOUR)	o - 3 v	Turbo
			Changeover switch set to OFF (SPORT)	B+	
52	Ignition timing adjustment terminal	Ignition switch: ON	Ignition timing adjustment terminal connected to ground	0 – 1V	
			Ignition timing adjustment terminal disconnected from ground	4.0 – 5.5V	

Terminal No.	Check point	Check conditions (Engine conditions)		Standard value	Remarks
36	Check engine/malfunction indicator lamp	Ignition switch: OFF → ON		o - 3 v ↓ 9 – 13V (Several seconds later)	
6	EGR solenoid	Ignition switch: ON		B+	
		Engine: Idle. Suddenly depress the accelerator pedal		Falls temporarily from B+.	
73	EGR temperature sensor	Ignition switch: ON	When sensor temperature is 50°C (122°F)	3.6 – 4.4V	
			When sensor temperature is 100°C (212°F)	2.2 – 3.0V	
74 77	Oxygen sensor heater	Engine: Idle, warm		o - 3 v	<California Non Turbo>
		Engine: 5,000 rpm		B+	
41	Induction control valve position sensor No. 1	Ignition switch: ON		0 – 1V or 4.5 – 5.5V	Non Turbo
		Engine: Slowly accelerated from idling speed to 5,000 rpm		0 – 1V or 4.5 – 5.5V ↓ 1.5 – 4V (for a moment)	
33	Induction control valve position sensor No. 2	Ignition switch: ON		0 - 1V or 4.5 – 5.5V	Non-Turbo
		Engine: Slowly accelerated from idling speed to 5,000 rpm		0 – 1V or 4.5 – 5.5V ↓ 1.5 – 4V (for a moment)	
40	Induction control valve (Opened)	Engine: Slowly accelerated from idling speed to 5,000 rpm		O - I V ↓ 4V or more (for a moment)	Non Turbo
39	Induction control valve (Closed)	Engine: Slowly decelerated from 5,000 rpm to idling speed			
44	Anti-lock braking signal	Engine: Idle		B+	Turbo
		• When vehicle is put in motion for the first time after the ignition switch was placed in ON position • Vehicle speed: 0 → 10 km/h (0 → 0.6 mph)		B+ ↓ 0 – 3V (for a moment)	
46	Total control "Reduce torque" request signal 1	Engine: Idle		4.5 – 5.5V	A/T
		Engine: Running at idle after warmup and changing speeds		O - I V	

Terminal No.	Check point	Check conditions (Engine conditions)	Standard value	Remarks
43	Total control "Reduce torque" request signal 2	Engine: Idle	O - I V	A/T
		Engine: Running at idle after warmup and changing speeds	1 – 5.5V	
7	Total control "Reduce torque" execution signal	Engine: Running at idle with coolant temperature at 50°C (122°F) or lower	0 – IV	AA
		Engine: Idle, warm	I - 4 v	

INJECTOR

REMOVAL AND INSTALLATION

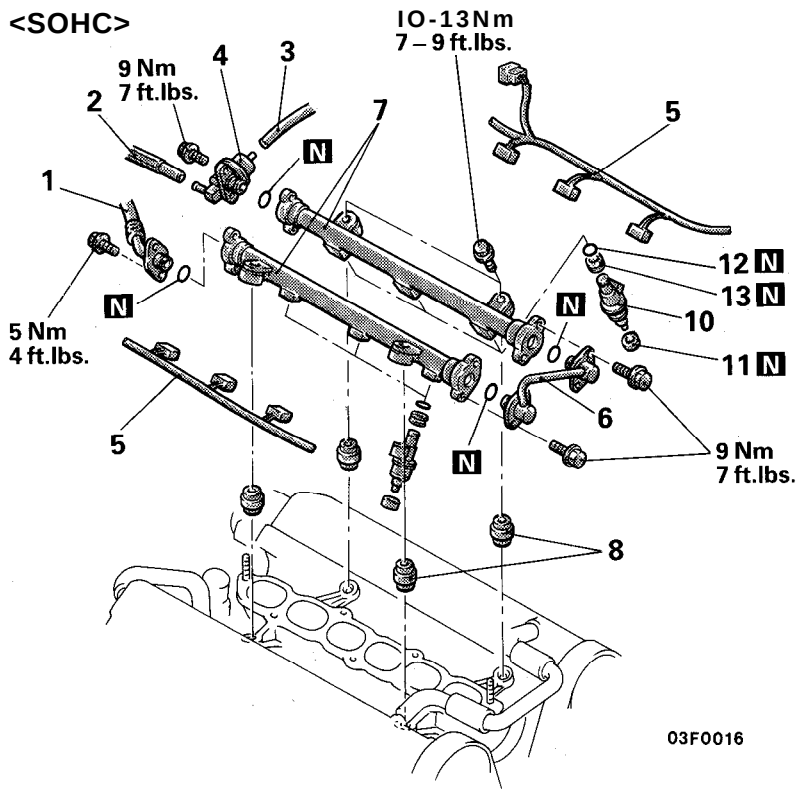

Pre-removal Operation
- Draining of the Coolant
  (Refer to GROUP 0 – Maintenance Service.)
- Removal of Air Intake Manifold Plenum
  (Refer to GROUP 11 – Intake Manifold Plenum.)
- Release of Residual Pressure from High Pressure Hose.
  (Refer to P.14A-161.)

Post-installation Operation
- Supplying of Coolant
  (Refer to GROUP 0- Maintenance Service.)
- Installation of Intake Manifold Plenum
  (Refer to GROUP 11 – Intake Manifold Plenum.)
- Checking for Fuel Leakage

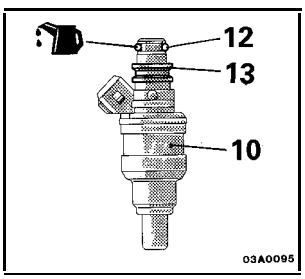

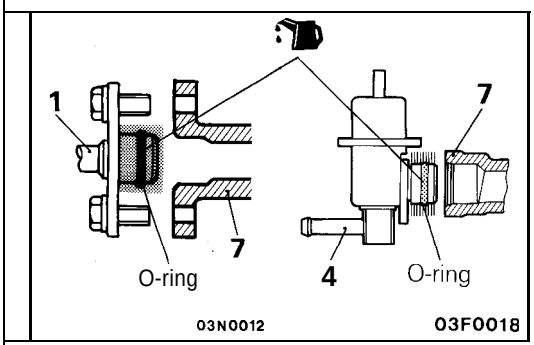

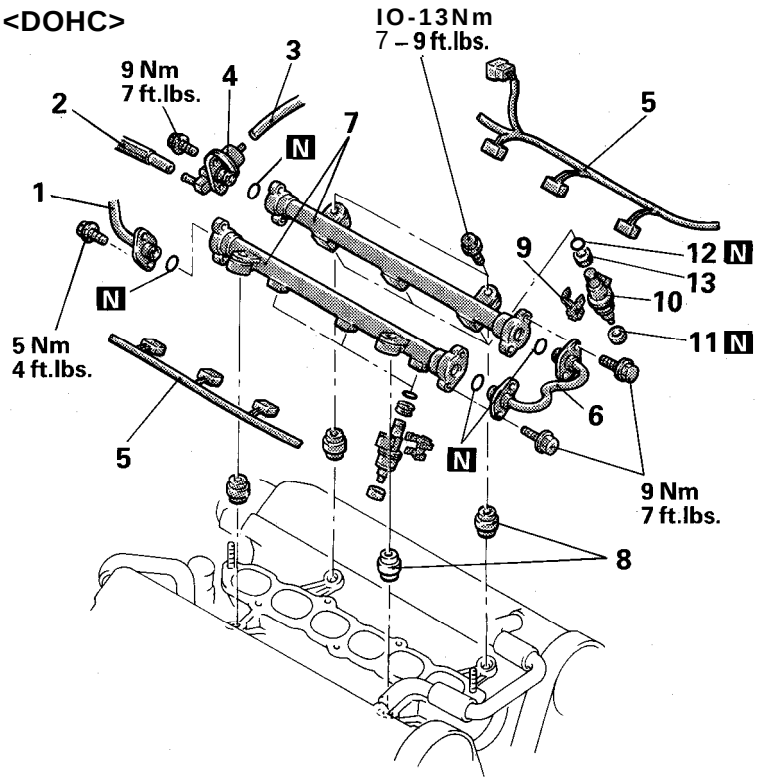

Removal steps

- ● *● * 1. Connection of high pressure fuel hose
  2. Connection of fuel return hose
  3. Connection of vacuum hose
- ● + 4. Fuel pressure regulator
  5. Connection of control harness
  6. Fuel pipe
  7. Fuel rail
  8. Insulator
  9. Injector support
- ● + 10. Injector
  11. Insulator
- ● + 12. O-ring
- ● C 13. Grommet

SERVICE POINT OF REMOVAL

1. DISCONNECTION OF HIGH PRESSURE FUEL HOSE

Bleed the residual pressure within the fuel pipe line so as to prevent the flow of fuel.

Caution

Cover the hose connection with rags to prevent splash of fuel that could be caused by some residual pressure in the fuel pipe line.

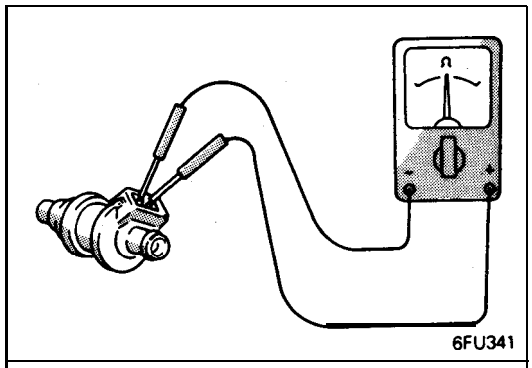

INSPECTION

INJECTORS

(1) Measure resistance between terminals of injector using a circuit tester.

Standard value:

13 – 16 Ω [at 20°C (68°F)] <Non Turbo>
2 – 3 Ω [at 20°C (68°F)] <Turbo>

(2) If the resistance is out of specification, replace the injector.

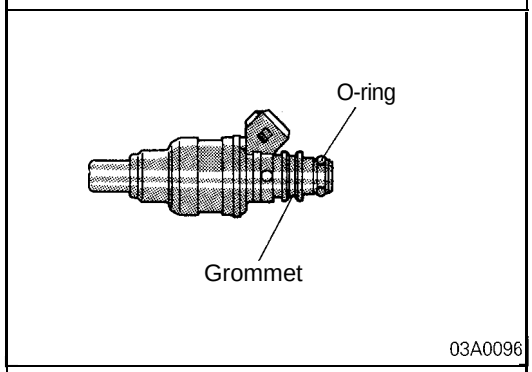

SERVICE POINTS OF INSTALLATION

13. INSTALLATION OF GROMMET / 12. O-RING

(1) After installation of the grommet and O-ring (in that sequence) to the injector, apply oil to the O-ring.

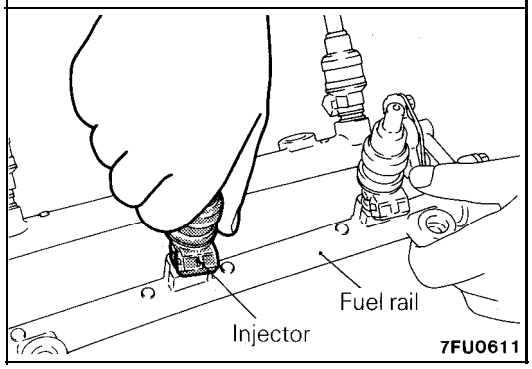

10. INSTALLATION OF INJECTOR

While turning the injector to the left and right, install it to the fuel rail.

Check to be sure that the injector turns smoothly.

Caution

If it does not turn smoothly, the O-ring may be trapped. Remove the injector and then re-insert it into the fuel rail and check once again.

4. INSTALLATION OF FUEL PRESSURE REGULATOR

When connecting the fuel pressure regulator to the fuel rail, apply light oil or gasoline to the O-ring, and then insert, being careful not to damage the O-ring.

1. CONNECTION OF HIGH PRESSURE FUEL HOSE

When connecting the high pressure fuel hose to the fuel rail, apply gasoline to the hose union, and then insert, being careful not to damage the O-ring.

THROTTLE BODY

REMOVAL AND INSTALLATION

Pre-removal and Post-installation Operation
- Draining and Supplying of Engine Coolant (Refer to GROUP 0 – Maintenance Service.)

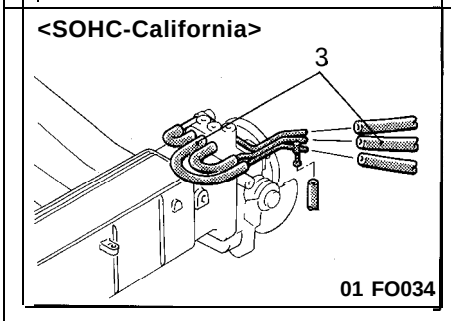

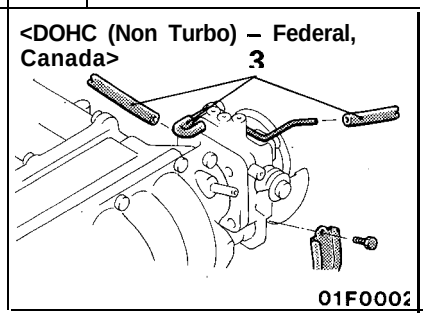

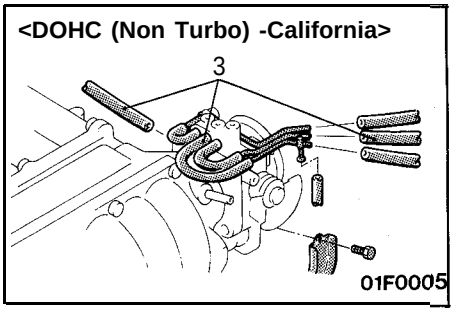

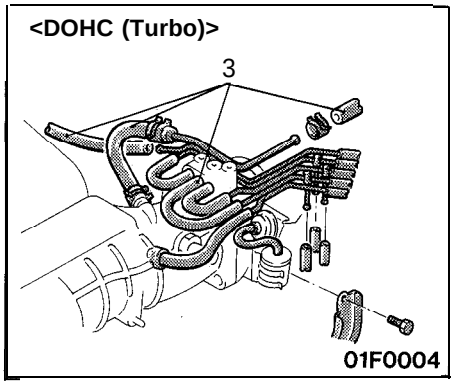

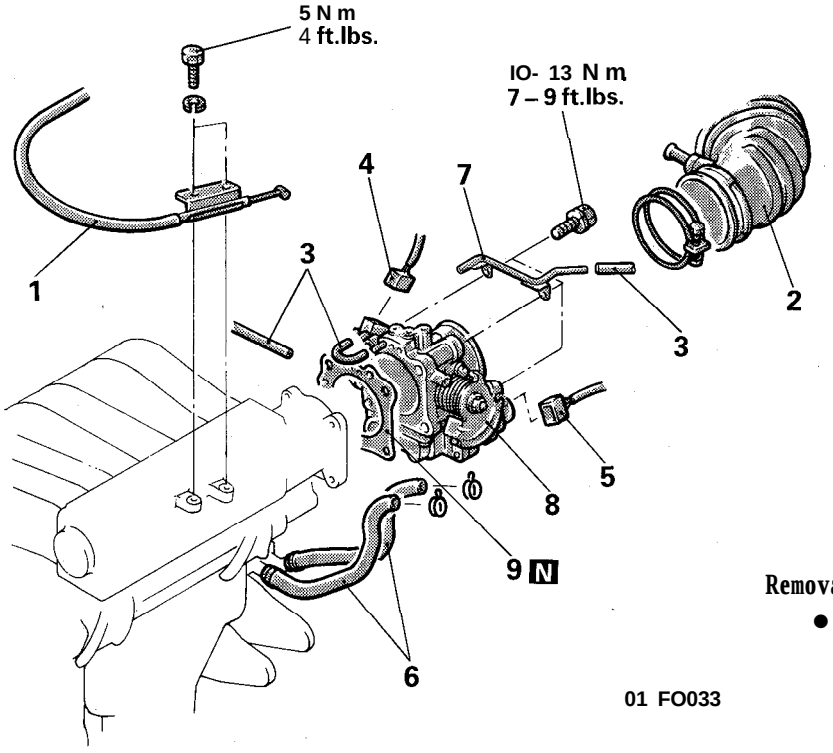

Removal steps
- 1. Connection of accelerator cable
  2. Connection of air intake hose
  3. Connection of vacuum hose
  4. Connection of TPS connector
  5. Connection of ISC motor connector
  6. Connection of water hose
  7. Vacuum pipe assembly
  8. Throttle body
- * 9. Gasket

NOTE
The layout of vacuum hoses (No. 3) of the construction drawing is for the SOHC – Federal, Canada.

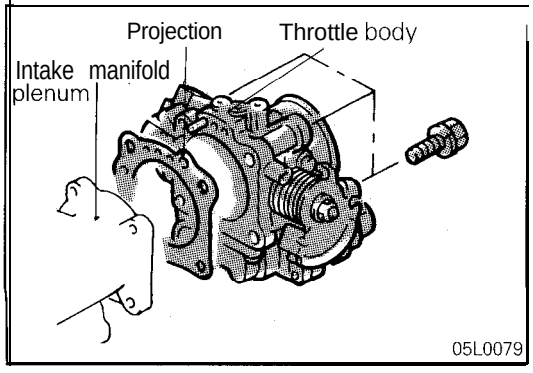

SERVICE POINTS OF INSTALLATION

9. INSTALLATION OF GASKET

Install the gasket so that the projection is where shown in the illustration.

Caution

Poor idling etc. may result if the gasket is installed incorrectly.

1. ACCELERATOR CABLE ADJUSTMENT

For information concerning adjustment of the accelerator cable, refer to P.14F-3.

DISASSEMBLY AND REASSEMBLY

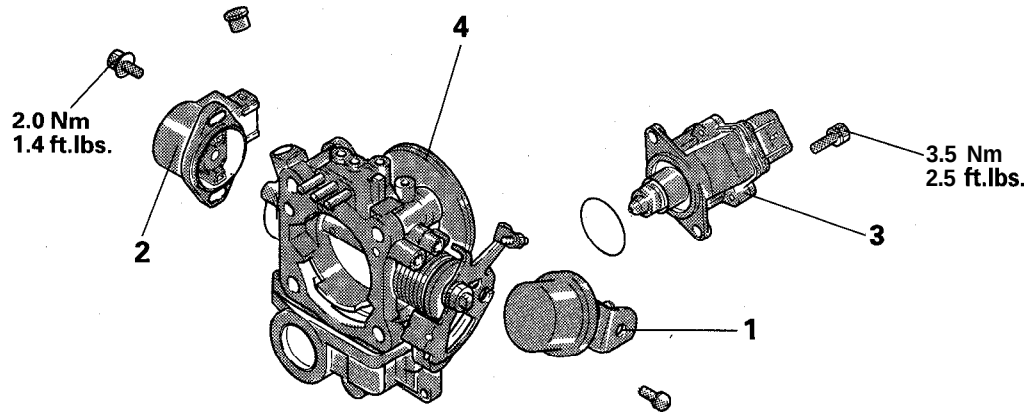

Disassembly steps

1. Dash pot <Turbo only>
- a 2. Throttle position sensor (within closed throttle position switch)
3. Idle air control motor assembly
4. Throttle body

7FU1338

SERVICE POINTS OF DISASSEMBLY

Caution

1. **When loosening a Phillips screw which has been firmly tightened, use a Phillips screwdriver that is an exact fit for the screw.**
2. **Do not remove the throttle valve.**
3. **Be careful when removing the throttle position sensor and idle air control motor mounting screws, as adhesive has been applied to these screws.**

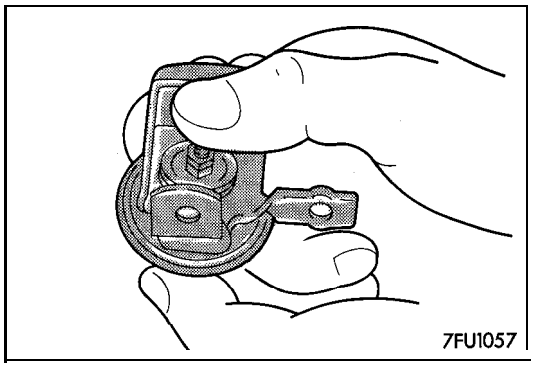

INSPECTION

(1) Push dash pot rod in lightly and confirm resistance.

NOTE
1. Resistance increases as the rod is pushed harder.
2. If the rod can be pushed in with no resistance, either the diaphragm or check valve is faulty.

(2) Release finger and confirm rod returns to its original position quickly.

NOTE
If rod returns slowly, the check valve is faulty.

CLEANING THROTTLE BODY PARTS

(1) Clean all throttle body parts.
Do not use solvent to clean the following parts:

- Throttle position sensor (closed throttle position switch)
- Idle air control motor

If these parts are immersed in solvent, their insulation will deteriorate.
Wipe them with cloth only.

(2) Check if the vacuum port or passage is clogged. Use compressed air to clean the vacuum passage.

SERVICE POINT OF REASSEMBLY

4. INSTALLATION OF THROTTLE POSITION SENSOR

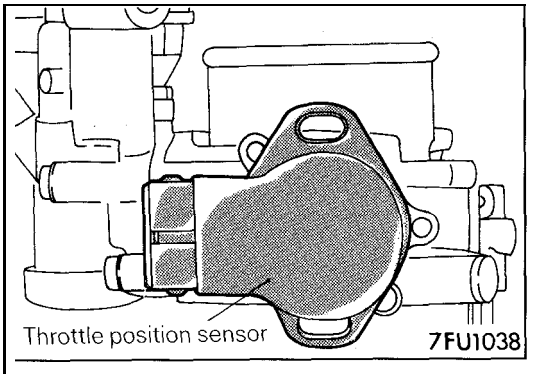

(1) Set the throttle position sensor to the throttle body as shown in the diagram.

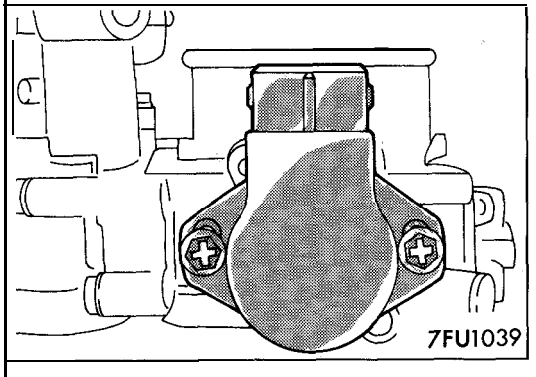

(2) After turnina the throttle position sensor 90" in the clockwise direction to set' it, tighten by turning the screw.

(3) Connect the circuit tester between 1 (ground) and 3 (output), or between 3 (output) and 4 (power). Then, make sure that the resistance changes smoothly when the throttle valve is slowly moved to the fully open position.

(4) Check for continuity across terminals 2 (closed throttle position switch) and 1 (ground) with the throttle valve both fully closed and fully open.

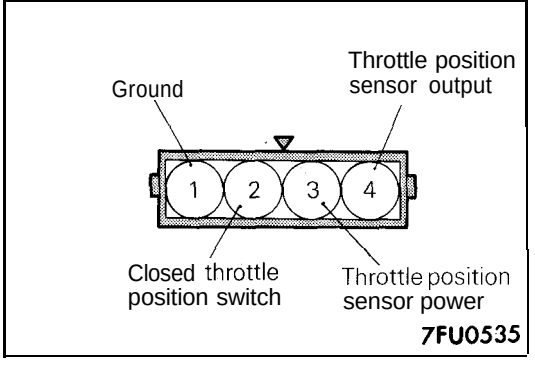

Throttle valve position	Continuity
Fully closed	Conductive
Fully open	Non-conductive

If there is not continuity with the throttle valve fully closed, turn the sensor in the counterclockwise direction, and then check again.

(5) If the above specifications are not met, replace the closed throttle position switch.

KNOCK SENSOR

REMOVAL AND INSTALLATION

Pre-removal and Post-installation Operation
- Removal and Installation of the Intake Manifold Plenum (Refer to GROUP 11 – Intake Manifold Plenum.)
- Removal and Installation of the Intake Manifold (Refer to GROUP 11 – Intake Manifold.)

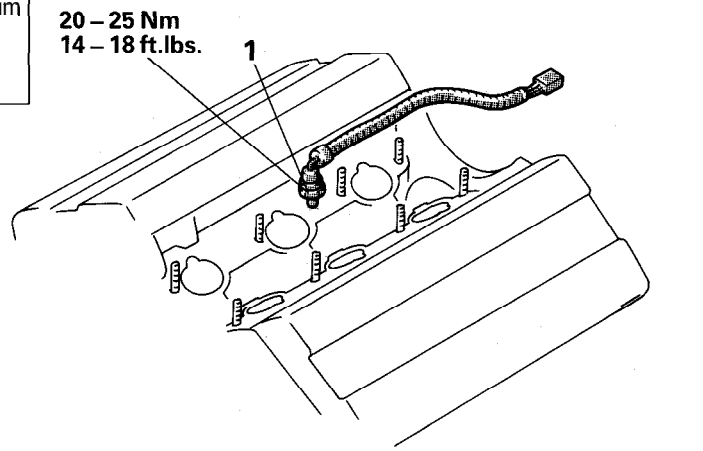

Removal steps

◆◆ ● 4 1. Knock sensor

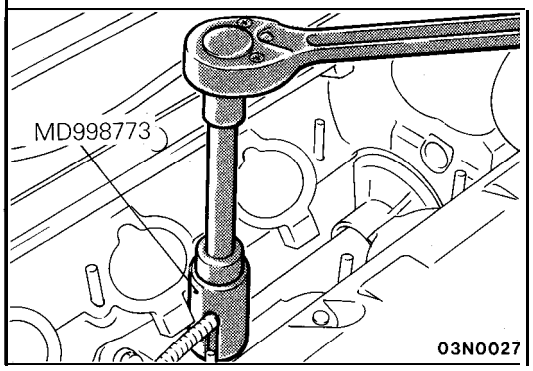

SERVICE POINT OF REMOVAL

1. REMOVAL OF KNOCK SENSOR

SERVICE POINT OF INSTALLATION

1. INSTALLATION OF KNOCK SENSOR

When the knock sensor is installed, be sure to tighten it precisely to the specified torque as its installation affects the engine control.

FUEL SUPPLY AND ENGINE CONTROL

CONTENTS

ENGINE CONTROL 12

FUEL FILTER 11

FUEL LINE AND VAPOR LINE 9

FUEL PUMP AND FUEL GAUGE UNIT ASSEMBLY AND FUEL TANK PRESSURE CONTROL VALVE 7

FUEL TANK 4

SERVICE ADJUSTMENT PROCEDURES 3

Accelerator Cable Inspection and Adjustment 3

SPECIFICATIONS 2

General Specifications 2

Sealant 2

Service Specifications 2

TROUBLESHOOTING 2

SPECIFICATIONS

GENERAL SPECIFICATIONS

Items	Specifications
Fuel	
Tank capacity dm³ (gal.)	75 (19.8)
Return system	Equipped
Filter	High pressure type

SERVICE SPECIFICATIONS

Items	Specifications
Standard value	
Accelerator cable play mm (in.)	
<M/T>	1 – 2 (.04 – .08)
<A/T>	3 – 5 (.12 – .20)

SEALANT

Items	Specified sealant
Accelerator arm and return spring	MOPAR Multi-mileage Lubricant Part No. 2525035 or equivalent
Fuel tank hole cover	MOPAR Rope Caulk Sealer 3/16 x 80" roll Part No. 4026044 or equivalent

TROUBLESHOOTING

ACCELERATOR CABLE AND ACCELERATOR PEDAL

Symptom	Probable cause	Remedy
Throttle valve will not fully open or close	Misadjusted accelerator cable	Adjust
	Misadjusted automatic speed-control cable	Adjust
	Broken return spring	Replace
	Throttle lever malfunction	Replace
Accelerator pedal operation not smooth (over acceleration)	Accelerator pedal wrongly tightened	Repair
	Misinstalled accelerator cable	Repair
	Accelerator cable requires lubrication	Lubricate or replace

FUEL TANK AND FUEL LINE

Symptom	Probable cause	Remedy
Engine malfunctions due to insufficient fuel supply	Bent or kinked fuel pipe or hose	Repair or replace
	Clogged fuel pipe or hose	Clean or replace
	Clogged fuel filter or in-tank fuel filter	Replace
	Water in fuel filter	Replace the fuel filter or clean the fuel tank and fuel line
	Dirty or rusted fuel tank interior	Clean or replace
	Malfunctioning fuel pump (Clogged filter in the pump)	Replace
Evaporative emission control system malfunctions (When tank cap is removed, pressure releasing noise is heard)	Mispiping of vapor line	Correct
	Disconnected vapor line piping joint	Correct
	Folded, bent, cracked or clogged vapor line	Replace
	Faulty fuel tank filler tube cap	Replace
	Malfunctioning fuel tank pressure control valve	Replace

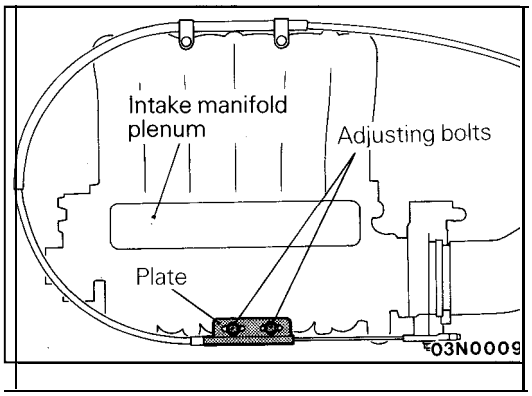

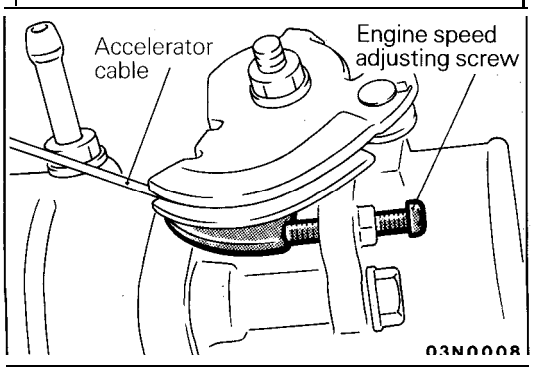

SERVICE ADJUSTMENT PROCEDURES

ACCELERATOR CABLE INSPECTION AND ADJUSTMENT

For models equipped with the cruise control system, refer to P. 14G-22.

(1) Check the accelerator cable for sharp bends.
(2) Check to ensure that the throttle lever is in contact with the engine speed adjusting screw.
(3) Check to ensure that the inner cable play is within the standard limits.

Standard value:

<M/T>	**1 – 2 mm (.04 – .08 in.)**
<A/T>	**3 – 5 mm (.12 – .20 in.)**

(4) If the play is out of the standard limits, loosen the adjusting bolts, slide the plate so that the inner cable play will fall within the standard limits, and then retighten the adjusting bolts.

FUEL TANK

REMOVAL AND INSTALLATION

Pre-removal Operation
- Draining of the Fuel
- Release of Residual Pressure from High Pressure Hose. (Refer to P.14A-161.)

Post-installation Operation
- Supplying of the Fuel
- Checking for Fuel Leakage

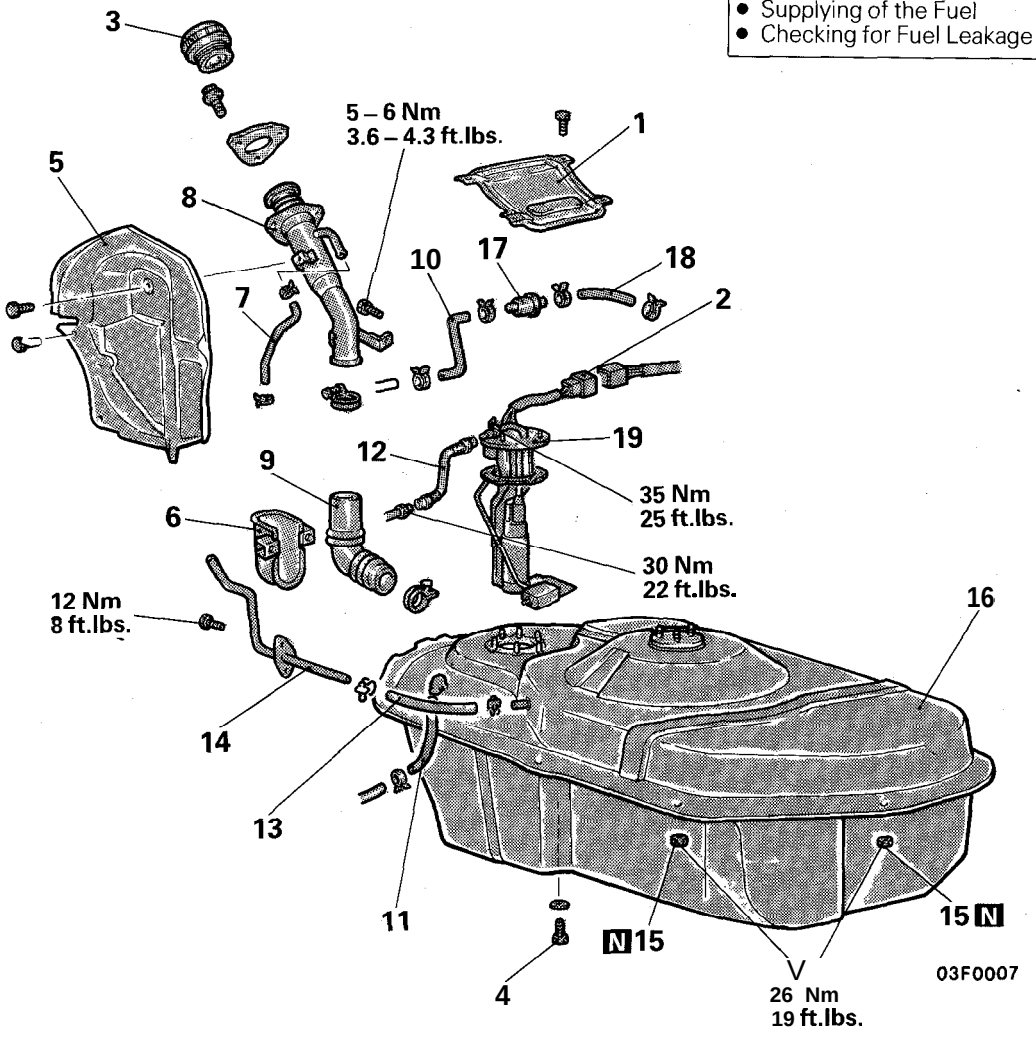

Removal steps

- ◆ a 1. Fuel gauge cover
  2. Fuel pump and fuel gauge unit assembly connector
  3. Fuel tank cap
  4. Drain plug
  5. Splash shield
  6. Fuel tank filler tube protector
- ◆ + 7. Vapor hose
  8. Fuel tank filler tube
  9. Fuel filler hose
- ◆◆ 10. Vapor hose
- ◆◆ 11. Return hose
- ◆◆ ◆◆ 12. High pressure fuel hose
- ◆◆ 13. Vapor hose
  14. Leveling pipe
  15. Self-locking nut
  16. Fuel tank
- ◆◆ 17. Fuel tank pressure control valve
- ◆◆ 18. Vapor hose
- ◆◆ 19. Fuel pump and fuel gauge unit assembly

SERVICE POINT OF REMOVAL

12. DISCONNECTION OF HIGH PRESSURE FUEL HOSE

Disconnect the hose from body main pipe first and then from fuel pump.

Caution
Cover the hose connection with rags to prevent splash of fuel that could be caused by some residual pressure in the fuel pipe line.

INSPECTION

- Check the hoses and the pipes for crack or damage.
- Check the fuel tank filler tube cap for malfunction.
- Check the fuel tank for deformation, corrosion or crack.
- Check the fuel tank for dust or foreign material.

NOTE
If the inside of the fuel tank is to be cleaned, use any one of the following:
(1) Kerosene
(2) Trichloroethylene
(3) A neutral emulsion type detergent

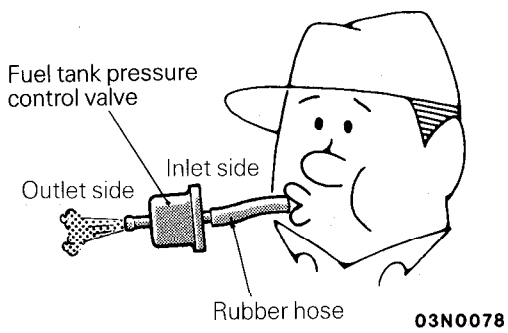

FUEL TANK PRESSURE CONTROL VALVE REPLACEMENT

Connect a clean rubber hose to the fuel tank pressure control valve and check for operation.

Inspection procedure	Normal condition
Lightly blow from the inlet (fuel tank) side	Air passes through after a slight resistance
Lightly blow from the outlet (canister) side	Air passes through

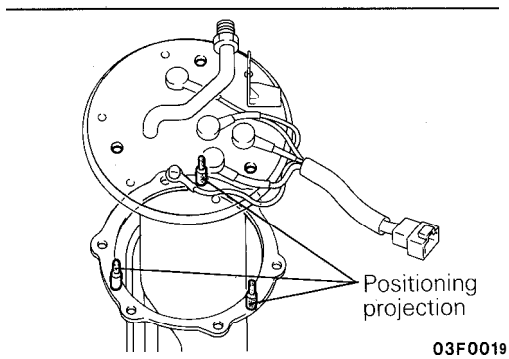

SERVICE POINTS OF INSTALLATION

19. INSTALLATION OF FUEL PUMP AND FUEL GAUGE UNIT ASSEMBLY

Align the three positioning projections of the packing with the holes in the fuel pump and fuel gauge unit assembly.

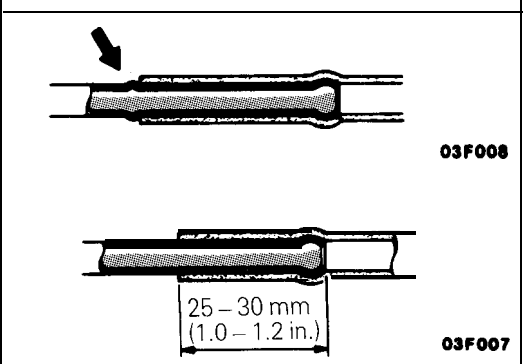

18.13. 10. 7. CONNECTION OF VAPOR HOSE

(1) If the pipe has a stepped part, connect the vapor hose to the pipe securely, up to the stepped part, as shown in the illustration.
(2) If the pipe does not have a stepped part, connect the vapor hose to the pipe securely, so that it is the standard value.

Standard value: 25 – 30 mm (1.0 – 1.2 in.)

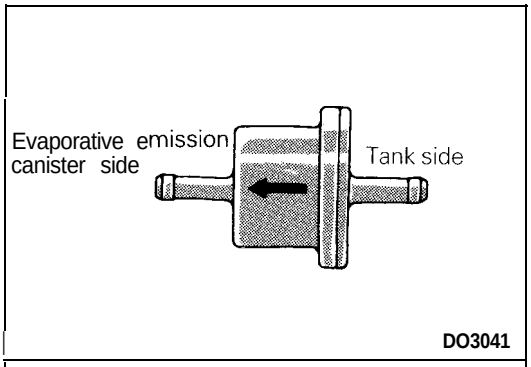

17. INSTALLATION OF FUEL TANK PRESSURE CONTROL VALVE

Install so that the fuel tank pressure control valve is facing in the direction shown in the illustration.

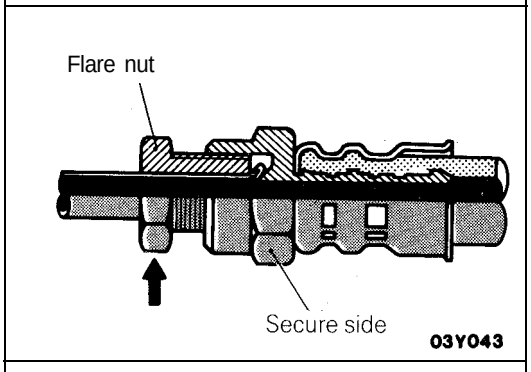

12. CONNECTION OF HIGH PRESSURE FUEL HOSE

Temporarily tighten the flare nut by hand, and then tighten it to the specified torque, being careful that the high pressure fuel hose does not become twisted.

Caution
When tightening flare nut, be careful not to bend or twist line to prevent fuel pump from damage.

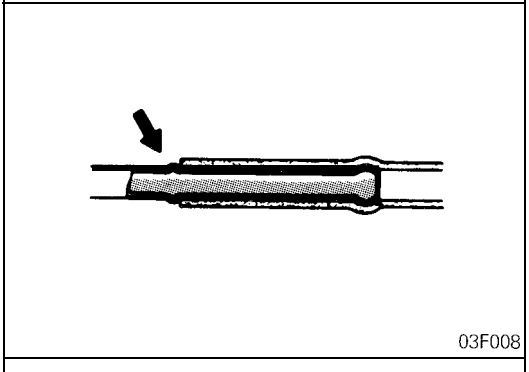

11. CONNECTION OF RETURN HOSE

Connect the return hose to the pipe securely, up to the stepped part, as shown in the illustration.

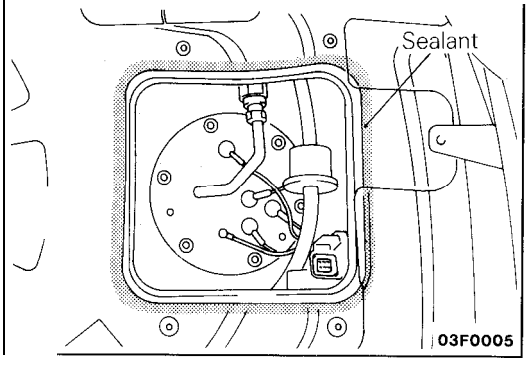

1. INSTALLATION OF FUEL GAUGE COVER

Before installing the fuel gauge cover, apply the specified sealant to the rear floor pan.

Specified sealant: MOPAR Rope Caulk Sealer 3/16 x80" roll Part No. 4026044 or equivalent

FUEL PUMP AND FUEL GAUGE UNIT ASSEMBLY AND FUEL TANK PRESSURE CONTROL VALVE

REMOVAL AND INSTALLATION

Pre-removal Operation
- Draining of the Fuel
- Release of Residual Pressure from High Pressure Hose (Refer to P.14A-161.)

Post-installation Operation
- Supplying of the Fuel
- Checking for Fuel Leakage

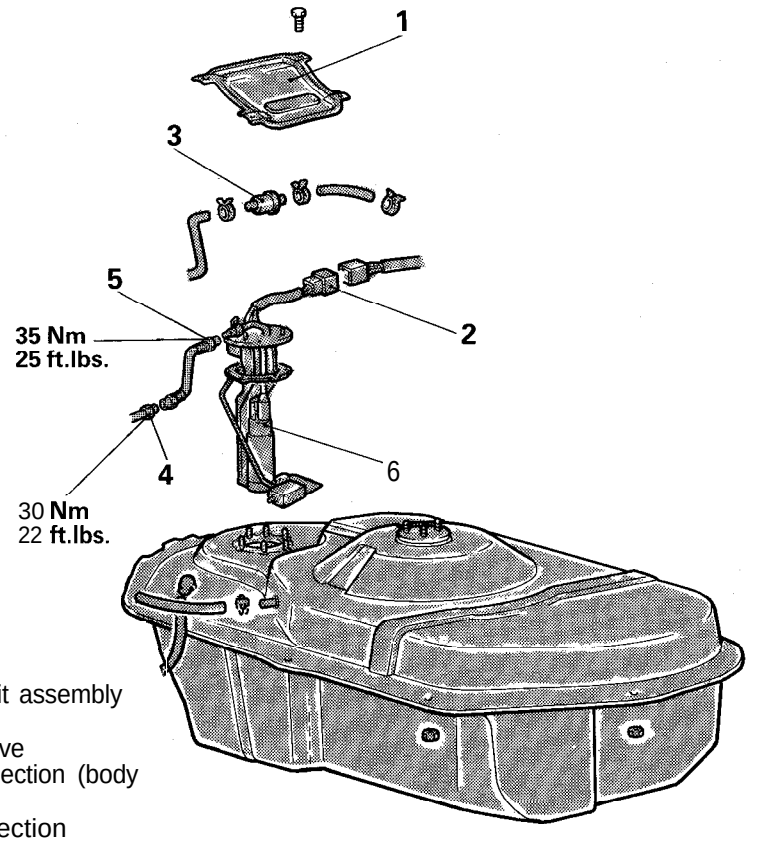

Removal steps

1. Fuel gauge cover
2. Fuel pump and fuel gauge unit assembly connector
3. Fuel tank pressure control valve
4. High pressure fuel hose connection (body side)
5. High pressure fuel hose connection (fuel pump side)
6. Fuel pump and fuel gauge unit assembly

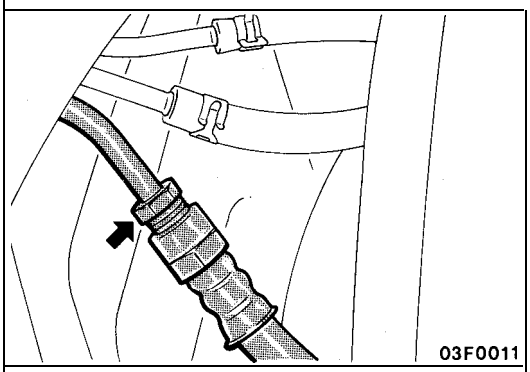

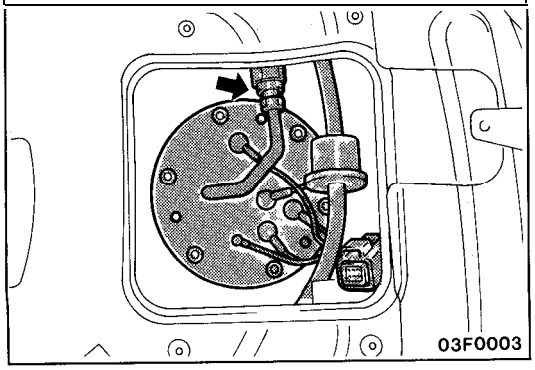

SERVICE POINTS OF REMOVAL

4. DISCONNECTION OF HIGH PRESSURE FUEL HOSE (BODY SIDE)

Caution
Cover the hose connection with rags to prevent splash of fuel that could be caused by some residual pressure in the fuel pipe line.

5. DISCONNECTION OF HIGH PRESSURE FUEL HOSE (FUEL PUMP SIDE)

NOTE
Hold the pump side nut with a wrench while turning the nut on the hose side.

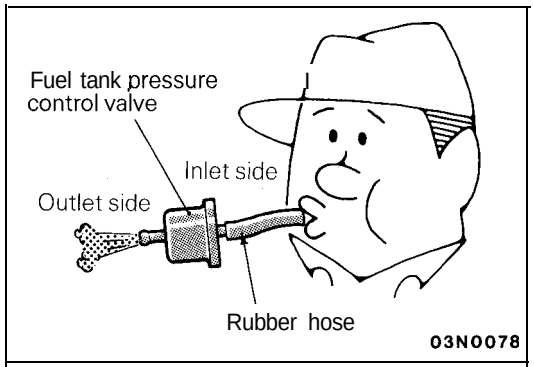

FUEL TANK PRESSURE CONTROL VALVE REPLACEMENT

Connect a clean rubber hose to the fuel tank pressure control valve and check for operation.

Inspection procedure	Normal condition
Lightly blow from the inlet (fuel tank) side	Air passes through after a slight resistance
Lightly blow from the outlet (canister) side	Air passes through

SERVICE POINTS OF INSTALLATION

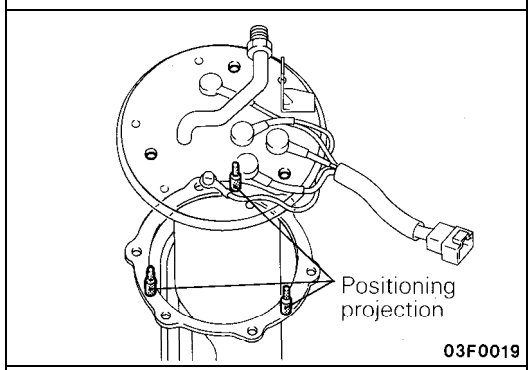

6. INSTALLATION OF FUEL PUMP AND FUEL GAUGE UNIT ASSEMBLY

Align the three positioning projections of the packing with the holes in the fuel pump and fuel gauge unit assembly.

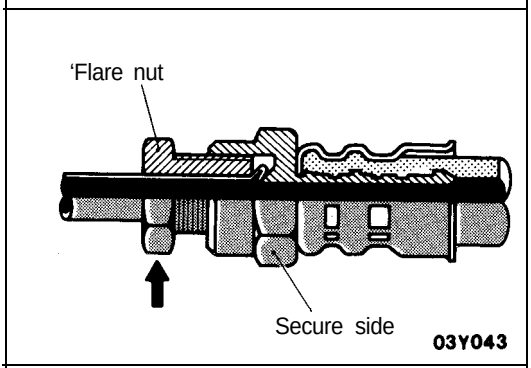

5. 4. CONNECTION OF HIGH PRESSURE FUEL HOSE

Temporarily tighten the flare nut by hand, and then tighten it to the specified torque, being careful that the high pressure fuel hose does not become twisted.

Caution
When tightening flare nut, be careful not to bend or twist line to prevent fuel pump from damage.

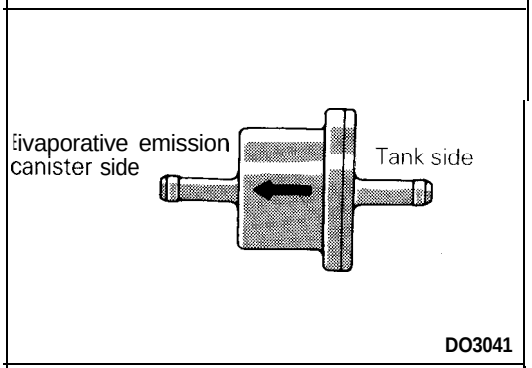

3. INSTALLATION OF FUEL TANK PRESSURE CONTROL VALVE

Install so that the fuel tank pressure control valve is facing in the direction shown in the illustration.

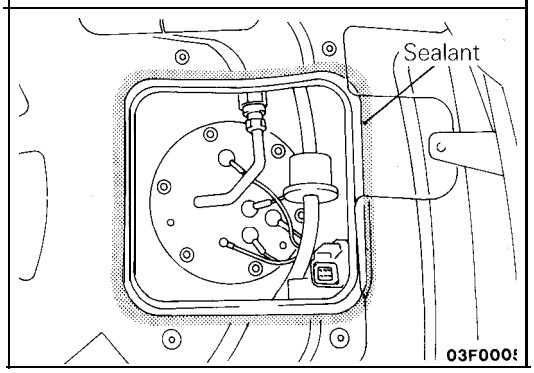

1. INSTALLATION OF FUEL GAUGE COVER

Before installing the fuel gauge cover, apply the specified sealant to the rear floor pan.

Specified sealant: MOPAR Rope Caulk Sealer 3/16 x80" roll Part No. 4026044 or equivalent

FUEL LINE AND VAPOR LINE

REMOVAL AND INSTALLATION

Pre-removal Operation
- Release of Residual Pressure from High Pressure Hose. (Refer to P.14A-161.)
- Removal of the Air Cleaner and Air Intake Hose (Refer to GROUP 11 -Air Cleaner.)

Post-installation Operation
- Installation of the Air Cleaner and Air Intake Hose (Refer to GROUP 11 -Air Cleaner.)
- Checking for Fuel Leakage

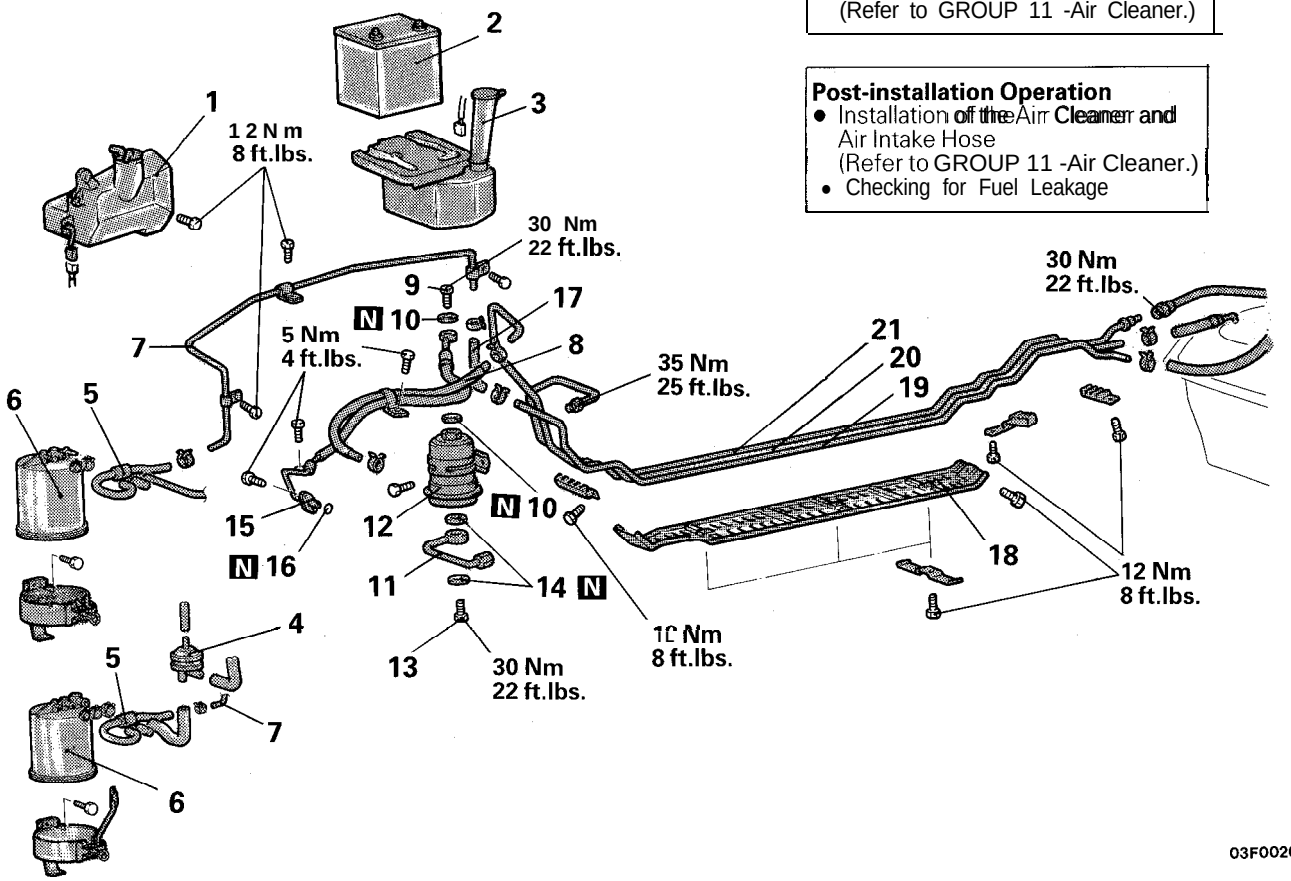

Removal steps

1. Reserve tank
2. Battery
3. Battery tray with washer tank assembly
4. Purge control valve
- ◆◆ 5. Fuelvapor hose
6. Evaporative emission canister
7. Vapor pipe assembly
- ● * 8. Fuel return hose
- ◆◆ 9. Eye bolt
10. Gasket
11. High pressure fuel pipe
- ● + 12. Fuel filter
- ◆◆ 13. Eye bolt
14. Gasket
- ◆◆ 15. High pressure fuel hose
16. O-ring
- ● + 17. Fuel vapor hose
18. Stone protector
19. Fuel vapor pipe
20. Fuel return pipe
21. Fuel main pipe

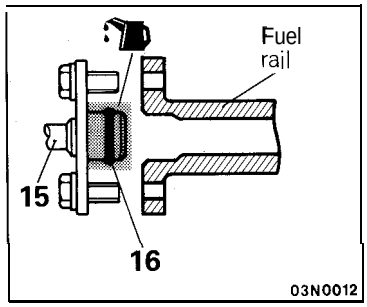

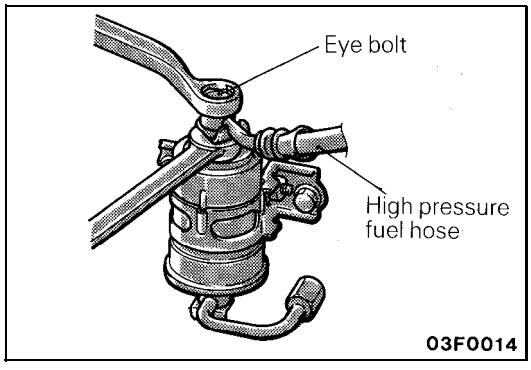

SERVICE POINTS OF REMOVAL

9. 13. REMOVAL OF EYE BOLT

Remove the eye bolt while holding the fuel filter nut securely.

Caution

Cover the hose connection with rags to prevent splash of fuel that could be caused by some residual pressure in the fuel pipe line.

INSPECTION

- Check the hoses and pipes for cracks, bend, deformation and clogging.
- Check the evaporative emission canister for clogging.
- Check the fuel filter for clogging and damage.

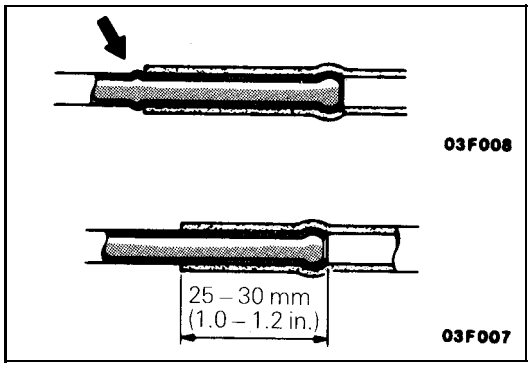

SERVICE POINTS OF INSTALLATION

17.5. INSTALLATION OF FUEL VAPOR HOSE / 8. FUEL RETURN HOSE

(1) If the fuel pipe has a stepped part, connect the fuel hose to the pipe securely, up to the stepped part, as shown in the illustration.

(2) If the fuel pipe does not have a stepped part, connect the fuel hose to the pipe securely, so that it is the standard value.

Standard value: 25 – 30 mm (1.0 – 1.2 in.)

15. INSTALLATION OF HIGH PRESSURE FUEL HOSE

Apply engine oil to the hose union.

Insert the hose, being careful not to damage the O-ring, and tighten securely.

Caution

Because there is high pressure applied between the fuel pump and the injection mixer, be especially sure that there is no fuel leakage in this area.

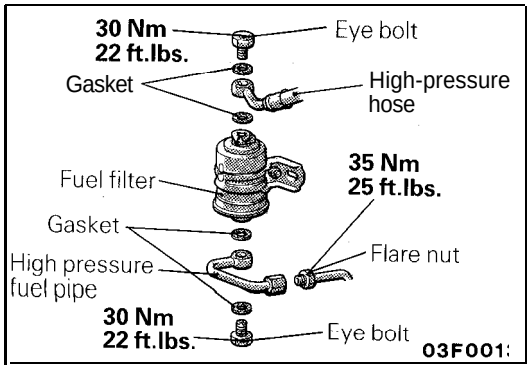

12. INSTALLATION OF FUEL FILTER

(1) When installing the fuel filter, first temporarily install the filter to the filter bracket; then insert the main pipe at the connector part of the high pressure fuel pipe, and manually screw in the main pipe's flare nut.

(2) Holding the fuel filter nut, tighten the fuel main pipe's flare nut and eye bolt at the specified torque. Then tighten the filter to the bracket.

FUEL FILTER

REMOVAL AND INSTALLATION

Pre-removal Operation
- Release of Residual Pressure from High Pressure Hose. (Refer to P.14A-161.)

Post-installation Operation
- Checking for Fuel Leakage

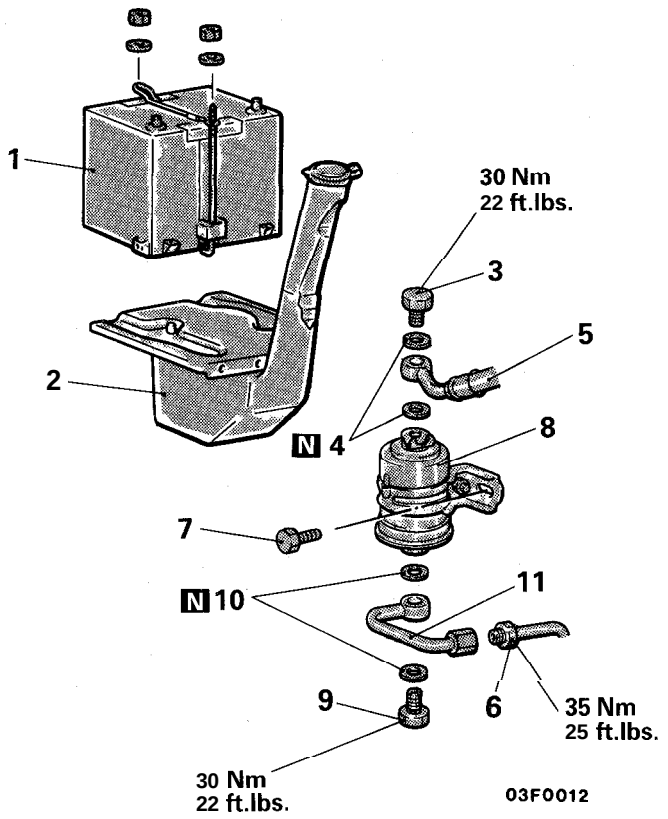

Removal steps

1. Battery
2. Battery tray with washer tank assembly
3. Eye bolt
4. Gasket
5. High pressure fuel hose
6. Connection of fuel main pipe
7. Mounting bolt
8. Fuel filter
9. Eye bolt
10. Gasket
11. High pressure fuel pipe

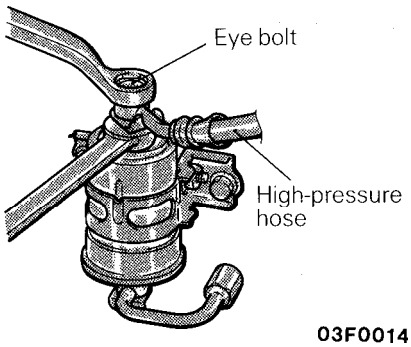

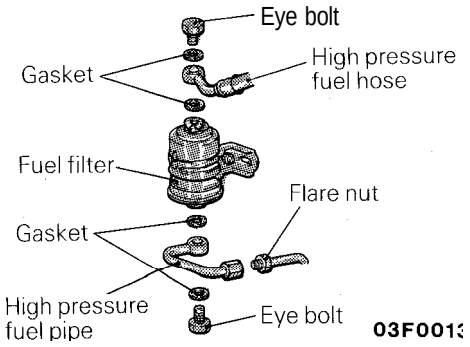

SERVICE POINTS OF REMOVAL

securely.

Caution

Cover the hose connection with rags to prevent splash of fuel that could be caused by some residual pressure

SERVICE POINTS OF INSTALLATION

8. INSTALLATION OF FUEL FILTER

(1) When installing the fuel filter, first temporarily install the

ENGINE CONTROL

REMOVAL AND INSTALLATION

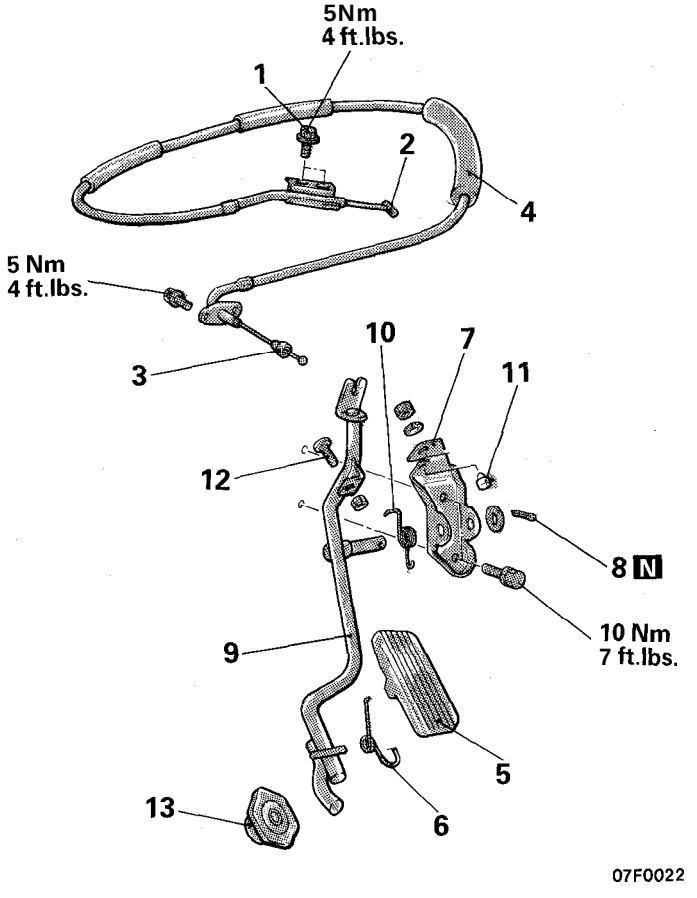

Post-installation Operation
- Accelerator Cable Adjustment (Refer to P.14F-3.)

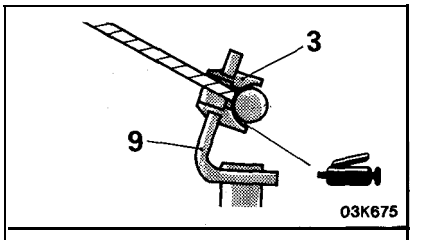

Grease: MOPAR Multi-mileage Lubricant Pat-t No. 2525035 or equivalent

Removal steps

1. Adjusting bolt
2. Connection of throttle body side inner cable
3. Bushing
4. Accelerator cable
5. Accelerator pedal
6. Spring
7. Accelerator arm bracket
8. Split pin
9. Accelerator arm
10. Return spring
11. Accelerator arm stopper
12. Bolt <A/T>
13. Stopper

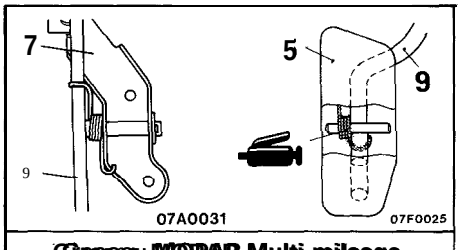

Grease: MOPAR Multi-mileage Lubricant Part No. 2525035 or equivalent

INSPECTION

- Check the inner and outer cable for damage.
- Check the cable for smooth movement.
- Check the accelerator arm for bending.
- Check the return spring for deterioration.
- Check the connection of bushing to end metal fitting.

CRUISE CONTROL SYSTEM

CONTENTS

CRUISE CONTROL SYSTEM* 28

SERVICE ADJUSTMENT PROCEDURES . 21

- Cruise Control Cables Inspection and Adjustment 21
- Cruise Control System Inspection 22
- Individual Parts Inspection 24

SPECIFICATIONS 2

- General Specifications 2
- Lubricants 2
- Service Specifications 2

SPECIAL TOOL 3

TROUBLESHOOTING 3

- Check Chart 7
- Harness and Component Layout 19
- On-board diagnostic Checking 15
- Preliminary Inspection 3
- Troubleshooting Quick Reference Chart 3

WARNINGS REGARDING SERVICING OF SUPPLEMENTAL RESTRAINT SYSTEM (SRS) EQUIPPED VEHICLES

WARNING!

(1) Improper service or maintenance of any component of the SRS, or any SRS-related component, can lead to personal injury or death to service personnel (from inadvertent firing of the air bag) or to the driver (from rendering the SRS inoperative).

(2) Service or maintenance of any SRS component or SRS-related component must be performed only at an authorized CHRYSLER dealer.

(3) CHRYSLER dealer personnel must thoroughly review this manual, and especially its GROUP 23B – Supplemental Restraint System (SRS) and GROUP 0 – Maintenance Service, before beginning any service or maintenance of any component of the SRS or any SRS-related component.

NOTE

The SRS includes the following components: impact sensors, SRS diagnosis unit, SRS warning light, air bag module, clock spring and interconnecting wiring. Other SRS-related components (that may have to be removed/installed in connection with SRS service or maintenance) are indicated in the table of contents by an asterisk (*).

SPECIFICATIONS

GENERAL SPECIFICATIONS

Items	Specifications
Main switch	
Rated load A	1.2
Voltage drop V	0.1 or less
Auto-cruise control switch	
Rated load mA	
SET	3
RESUME	6
CANCEL	10
Stop light switch (for cruise control)	
Rated load A	0.1 -0.9
Voltage drop (at rated load) V	0.15 or less
Clutch switch	
Rated load A	0.1 – 1.5
Voltage drop (at rated load) V	0.15 or less
Auto-cruise control unit	
Range of speed control km/h (mph)	40 – 200 (25 – 124)
Vacuum pump assembly	
Vacuum pump	
Type	Diaphragm type
Rated load A	3.0 or less
Control valve, release valve	
Rated load A	0.4 or less
Actuator	
Drive system	Vacuum type
Stroke mm (in.)	38 – 42 (1.5 – 1.7)

SERVICE SPECIFICATIONS

Items	Specifications
Accelerator cable play mm (in.)	
<M/T>	0 – 1 (0 – .04)
<A/T>	2 – 3 (.08 – .12)
Throttle cable mm (in.)	1 – 2 (.04 – .08)
Cruise control cable mm (in.)	1 – 2 (.04 – .08)
Resistance between terminals for control valve and relief valve in vacuum pump Ω	50-60

LUBRICANTS

Items	Specified lubricants	Quantity
Pedal side of accelerator cable	MOPAR Multi-mileage Lubricant Part No. 2525035 or equivalent	As required

SPECIAL TOOL

Tool number and tool name		Replaced by Miller tool number	Application
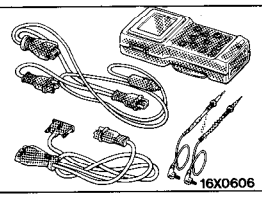	MB991502 Scan tool (MUT-II)	DRB-II Scan tool	Checking of the diagnostic output
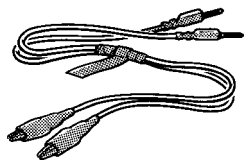	MB991 529 Diagnostic trouble code check harness	MB99 1529	Inspection of cruise control system using a voltmeter

TROUBLESHOOTING

PRELIMINARY INSPECTION

Check the following points and repair defective points, if any, before troubleshooting.

(1) Check that the vacuum pump assembly, link assembly, actuator and all cables and vacuum hoses are properly installed and that the cables and vacuum hoses are correctly routed.
(2) Check that the link assembly and all cables move smoothly.
(3) Check each of the cables for excessive play or tension.

TROUBLESHOOTING QUICK REFERENCE CHART

Cruise control system is canceled when cancellation not wanted.
Or, the cruise control system cannot be set after an automatic cancellation.

ck the diagnostic output.
er to P.14G-15.)

result of diagnostic output check O.K.?

No → Based on the diagnostic trouble code, check the circuit and individual parts. (Refer to P.14G-15.)

Yes ↓

Can cruise control be set at the present moment?

No → Refer to section on trouble symptoms, "Cruise control cannot be set." (Refer to P. 14G-4.)

Yes ↓

Set cruise control and perform driving test.

Does the same problem occur again?

Yes → Check the diagnostic output. (Refer to P.14G-15.)

No → AUTO CANCEL activated during operation on a steep slope, or a temporary loose contact in the connector

Cruise control system cannot be set.

NOTE
This chart contains troubleshooting procedures to perform when a problem cannot be detected by on-board diagnostic.

Check input. (Refer to P.14G-16.)

↓

Is the result of input check O.K.?

Yes → Check vacuum pump assembly circuit. (Refer to P.14G-11.)

NOTE
If the results of checks on the vacuum pump assembly circuit and actuator parts (refer to P.14G-24.) indicate that they are good, replace the control unit.

No ↓

Result of check	Probable cause	Remedy	Reference page
None of the codes appear even if input operations are performed.	Open circuit in control unit power supply circuit.	Replace main switch or repair harness.	P.14G-7
	Open circuit in control switch circuit	Replace control switch or repair harness.	P.14G-8
	Defective control unit	Replace control unit.	–
Even when SET switch is set to OFF, code No. 21 does not go away.	SET switch ON malfunction	Replace the control switch.	P.14G-8
Even when RESUME switch is set to OFF, code No. 22 does not go away.	RESUME switch ON malfunction	Replace control switch.	P.14G-8
Even when CANCEL switch is set to OFF, code No. 27 does not go away.	CANCEL switch ON malfunction	Replace control switch.	P.14G-8
Even when brake pedal is depressed, code No. 23 is not displayed.	Defective stop light switch circuit	Replace stop light switch or repair harness.	P.14G-12
Even when brake pedal is released, code No. 23 does not go away.			
Even when clutch pedal is released, code No. 26 does not go away. <M/T>	Defective clutch pedal position switch circuit	Replace clutch pedal position switch or repair harness.	P.14G-12
Even when select lever is placed in any position other than “N” and “P”, code No. 26 does not go away. <A/T>	Defective park/neutral position switch circuit	Replace park/neutral position switch or repair harness.	P.14G-13
Code No. 25 is not displayed even when vehicle speed is less than about 40 km/h (25 mph).	Defective vehicle speed sensor circuit	Check and repair vehicle speed sensor circuit,	P.14G-10
Even when vehicle speed is increased to more than about 40 km/h (25 mph), code No. 25 does not go away. Code No. 24 is not displayed, either.			

Trouble symptom	Probable cause	Check chart No.	Remedy
• The set vehicle speed varies greatly upward or downward. • "Hunting" (repeated alternating acceleration and deceleration) occurs after setting is made.	Malfunction of the vehicle speed sensor circuit	No. 4	Repair the vehicle speed sensor system, or replace
	Vacuum pump assembly circuit poor contact	No. 5	Repair the actuator system, or replace the part.
	Malfunction of the vacuum pump assembly (including air leaks from negative pressure passage)		
	Malfunction of the ECU	–	Replace the ECU.
The cruise control system is not canceled when the brake pedal is depressed.	Brake switch (for cruise control) malfunction (short-circuit)	No. 6	Repair the harness or replace the stop light switch.
	Vacuum pump assembly drive circuit short-circuit	No. 5	Repair the harness or replace the vacuum pump assembly.
	Malfunction of the ECU	–	Replace the ECU.
The cruise control system is not canceled when the clutch pedal is depressed. <M/T> (It is canceled, however, when the brake pedal is depressed.)	Damaged or disconnected wiring of clutch pedal position switch input circuit	If the input check code No. 26 indicates a malfunction. No. 7	Repair the harness, or repair or replace the clutch pedal position switch.
	Clutch switch improper installation (won't switch ON)		
	Malfunction of the ECU	–	Replace the ECU.
The cruise control system is not canceled when the shift lever is moved to the "N" position. <A/T> (It is canceled, however, when the brake pedal is depressed.)	Damaged or disconnected wiring of park/neutral position switch input circuit	If the input check code No. 26 indicates a malfunction. No. 8	Repair the harness, or repair or replace the park/neutral position switch.
	Improper adjustment of park/neutral position switch		
	Malfunction of the ECU	–	Replace the ECU.
Cannot decelerate by using the SET switch.	Temporary damaged or disconnected wiring of control switch input circuit	No. 2	Repair the harness or replace the control switch
	Vacuum pump assembly circuit poor contact	No. 5	Repair the harness or replace the vacuum pump assembly.
	Malfunction of the vacuum pump assembly		
	Malfunction of the ECU	–	Replace the ECU.

NOTE
ECU: Electronic control unit

Trouble symptom	Probable cause	Check chart No.	Remedy
Cannot accelerate or resume speed by using the RESUME switch.	Open or short circuit in RESUME switch circuit in control switch	No. 2	Replace the control switch.
	Vacuum pump assembly circuit poor contact	No. 5	Repair the harness or replace the vacuum pump assembly.
	Malfunction of the vacuum pump assembly (including air leaks from negative pressure passage)		
	Malfunction of the ECU	–	Replace the ECU.
Even when CANCEL switch is set to ON, cruise control is not canceled (Cruise control, however, is canceled when brake pedal is depressed.)	Open or short circuit in CANCEL switch circuit in control switch	If the input check code No. 27 indicates a malfunction. No. 2	Replace the control switch
	Malfunction of the ECU	–	Replace the ECU
The cruise control system can be set while traveling at a vehicle speed of less than 40 km/h (25 mph), or there is no automatic cancellation at that speed.	Malfunction of the vehicle-speed sensor circuit	No. 4	Repair the vehicle speed sensor system, or replace the part.
	Malfunction of the ECU	–	Replace the ECU.
The cruise control indicator light of the combination meter does not illuminate. (But cruise control system is normal)	Damaged or disconnected bulb of indicator light	No. 3	Repair the harness or replace the light bulb.
	Harness damaged or disconnected		
	Malfunction of the ECU	–	Replace the ECU.
Cruise control ON indicator light does not come on. (However, cruise control is functional.)	Burned-out indicator light bulb	No. 3	Repair the harness or replace the main switch.
	Open or short circuit in harness		
Overdrive is not canceled during fixed speed driving <A/T>	Malfunction of circuit related to overdrive cancellation, or malfunction of ECU	No. 10	Repair the harness or replace the part.
No shift to overdrive during manual driving. <A/T>			

CHECK CHART

1	Inspection of control unit power supply circuit

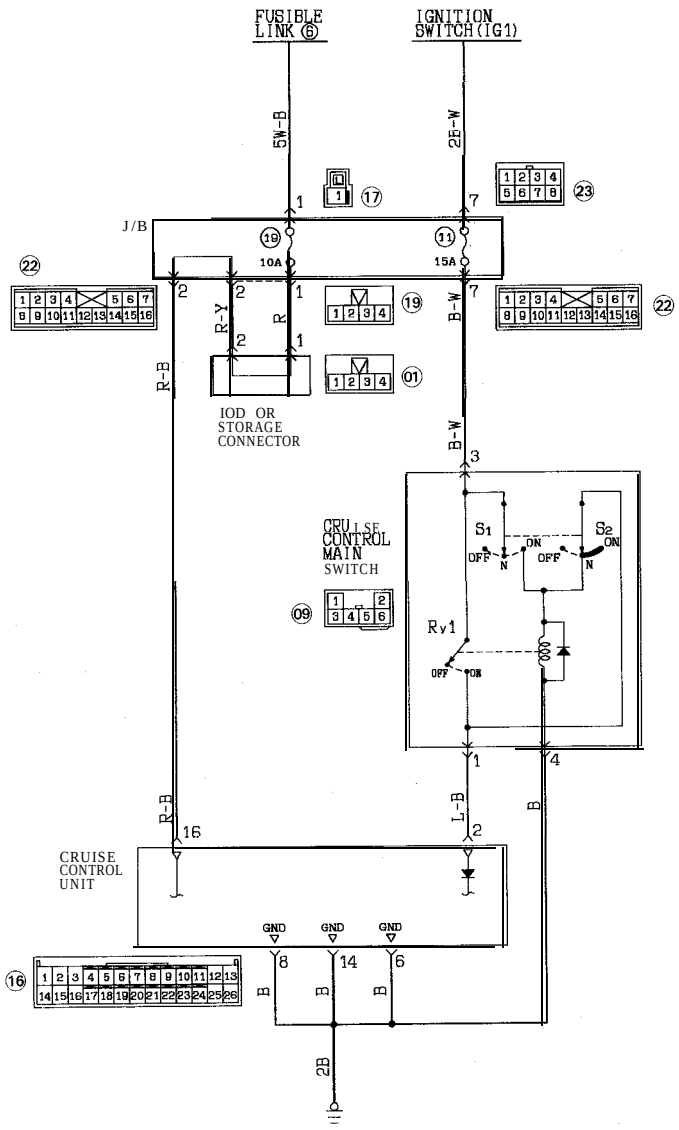

DESCRIPTION OF OPERATION

The power is supplied through the ignition switch (IG_1) and cruise control main switch to the control unit.

1. When the cruise control main switch is set to ON with the ignition switch at ON, the current from switch S_1 flows through relay Ry_1 in the switch. Accordingly, the contact of relay Ry_1 is closed and the power is supplied to the control unit.
2. When the main switch is released, it automatically returns to the neutral position. Since the current from switch S_2 flows to relay Ry_1, the contact of relay Ry_1 remains closed.
3. When the main switch is set to OFF, current to relay Ry_1 is interrupted. This opens the contact of relay Ry_1 to stop the power supply to the control unit. When the switch is released, it automatically returns to the neutral position, but relay Ry_1 stays in the OFF state.
4. When the ignition switch is set to OFF while relay Ry_1 in the main switch is ON, relay Ry_1 is forced to the OFF state just like when the main switch is set to OFF. Even if the ignition switch is set to ON again, relay Ry_1 stays in the OFF state until the main switch is set to ON.

NOTE
The numbers beside each connector correspond to those in the section (P.14G-19) "HARNESS AND COMPONENTS LAYOUT".

TROUBLESHOOTING HINTS

ECU terminal voltage

Terminal No.	Signal name	Condition	Terminal voltage
2	Control unit power supply	Main switch ON and neutral position thereafter	Battery positive voltage
		Main switch OFF and neutral position thereafter	ov
8, 14	Control unit ground	At all times	ov
16	Control unit back up power supply	At all times	Battery positive voltage

2	Inspection of control switch circuit

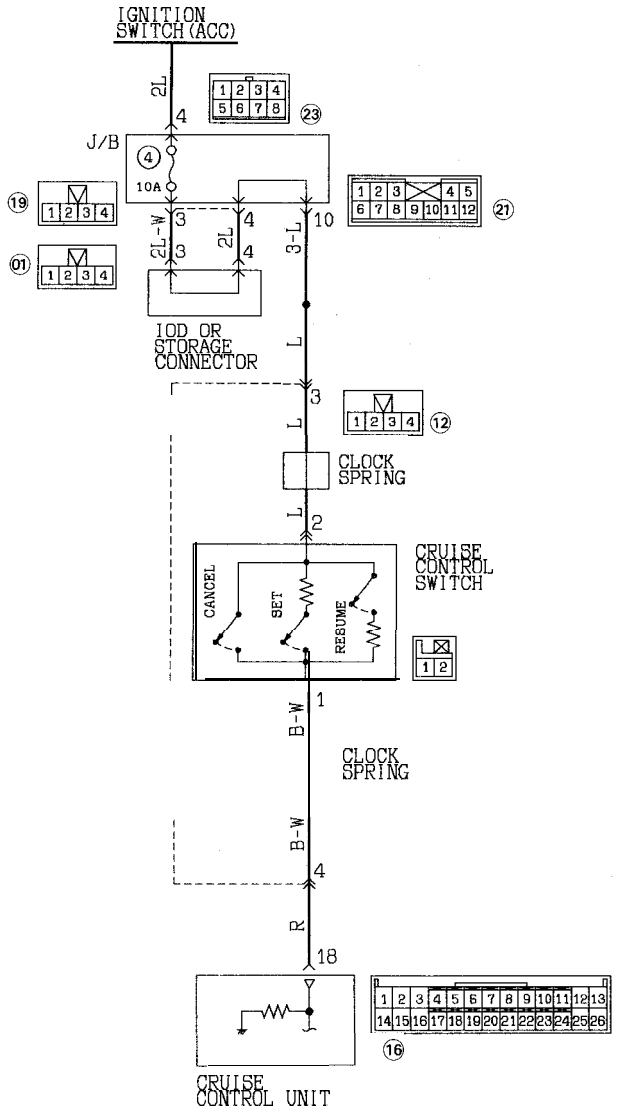

DESCRIPTION OF OPERATION

The control switch is a switch in which the SET, **RESUME** and CANCEL switches are integrated. Therefore, different resistance values are used for the individual switches to change the outputs (voltages) to the control unit. Current flows through fuse No. ④ of J/B and through the control switch to the control unit.

1. SET switch

When the cruise control switch is ON, if the SET switch is set to ON while vehicle speed is within a range from about 40 to 200 km/h (25 to 124 mph), the vehicle starts cruising at the speed. If the SET switch is kept at ON during cruise operation, the vehicle coasts, and starts cruising at the speed reached when the SET switch is set to OFF.

2. RESUME switch

Even if cruise operation is canceled, the vehicle resumes cruising at the speed set before the cancellation. Both when the main switch is set to OFF and when the vehicle speed is reduced to less than 40 km/h (25 mph) , the vehicle will not resume cruising at the previously set speed even if the RESUME switch is set to ON. If the RESUME switch is kept at ON during cruise operation, the engine accelerates, and the vehicle starts cruising at the speed reached when the RESUME switch was set to OFF. (However, when the vehicle speed is raised to more than 200 km/h (124 mph), the vehicle cruises at approximately 200 km/h (124 mph).

3. CANCEL switch

When the CANCEL switch is set to ON during cruise operation, the cancel signal is input to the control unit which internally interrupts the power supply to the vacuum pump assembly for cancellation of cruise operation.

TROUBLESHOOTING HINTS

Diagnosis No.15 (Automatically canceled)

ECU terminal voltage

Terminal No.	Signal name	Condition	Terminal voltage
18	Control switch	When all switches are OFF	ov
		When SET switch is ON	3V
		When RESUME switch is ON	6V
		When CANCEL switch is ON	Battery positive voltage

3	Inspection of indicator light circuit

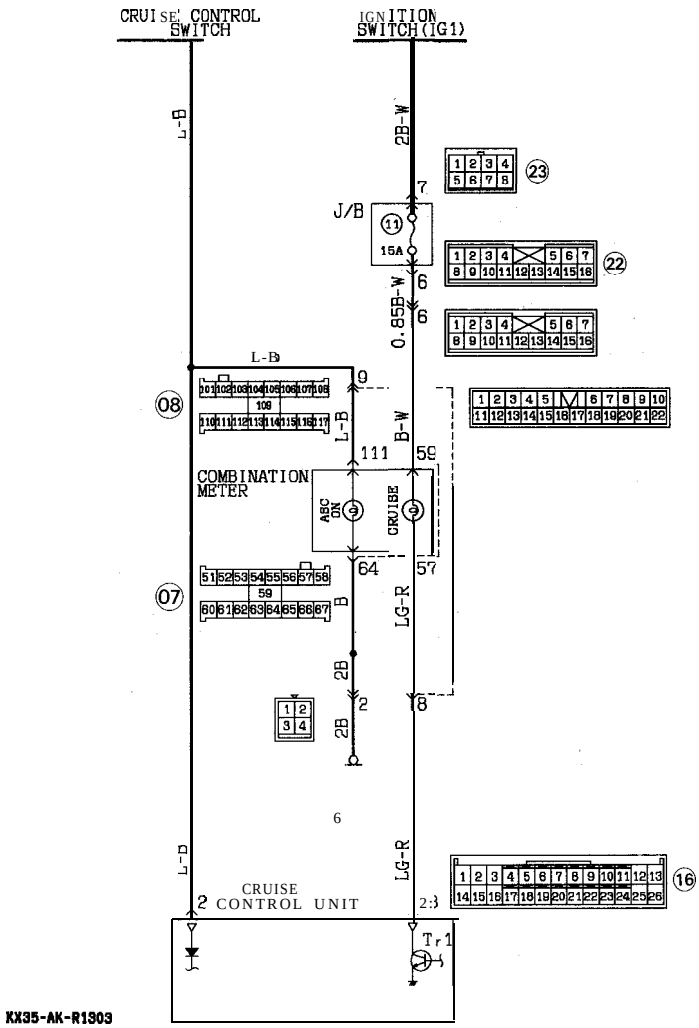

DESCRIPTION OF OPERATION

1. Cruise control ON (ASC ON) indicator light

Located in the combination meter, it lights as soon as the main switch is set to ON.

2. Cruise control (CRUISE) indicator light

During cruise control operation, transistor Tr_1 in the control unit is kept in the ON state to keep the indicator light on.

TROUBLESHOOTING HINTS

ECU terminal voltage

Terminal No.	Signal name	Condition	Terminal voltage
23	Cruise control (CRUISE) indicator light	When cruise control is active	ov
		When cruise control is inactive	Battery positive voltage

4 Inspection of vehicle speed sensor circuit

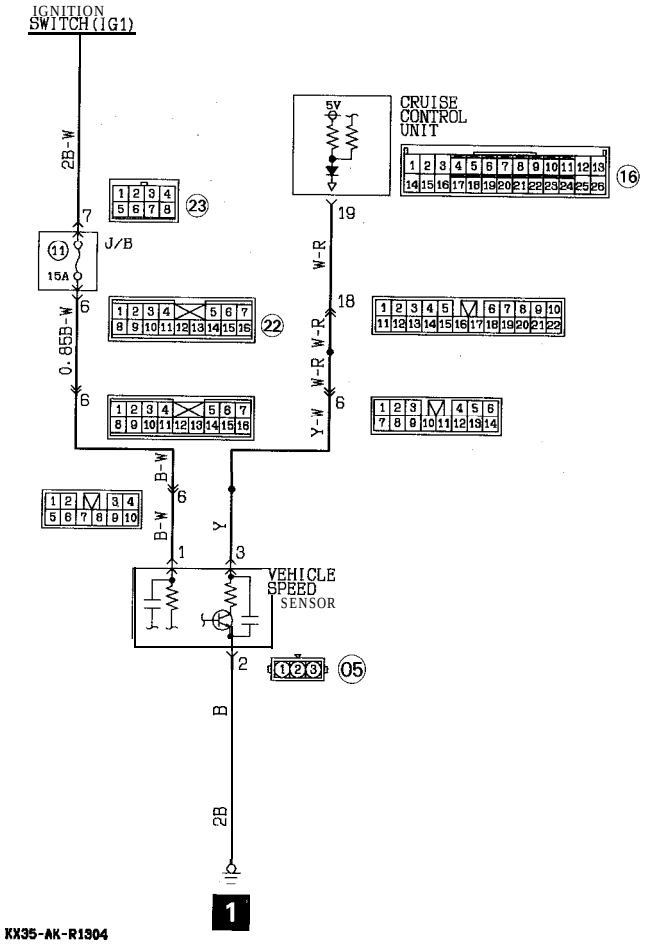

DESCRIPTION OF OPERATION

The vehicle speed sensor, mounted in the transmission, delivers pulse signals proportional to the rotational speed of the transmission output gear (vehicle speed) to the control unit. (Four pulse signals generated per rotation of the output gear) Since the vehicle speed sensor is of the electronic type, the power is supplied through the ignition switch (IG_1).

TROUBLESHOOTING HINTS

Diagnosis No. 12 (Automatically canceled)

ECU terminal voltage

Terminal No.	Signal name	Condition	Terminal voltage
19	Vehicle speed sensor	Slowly drive forward with SELECT lever at “D” or “1 st Speed”	0 to 0.6V ↕ Flashing 2V or more

5 Inspection of vacuum pump assembly drive circuit

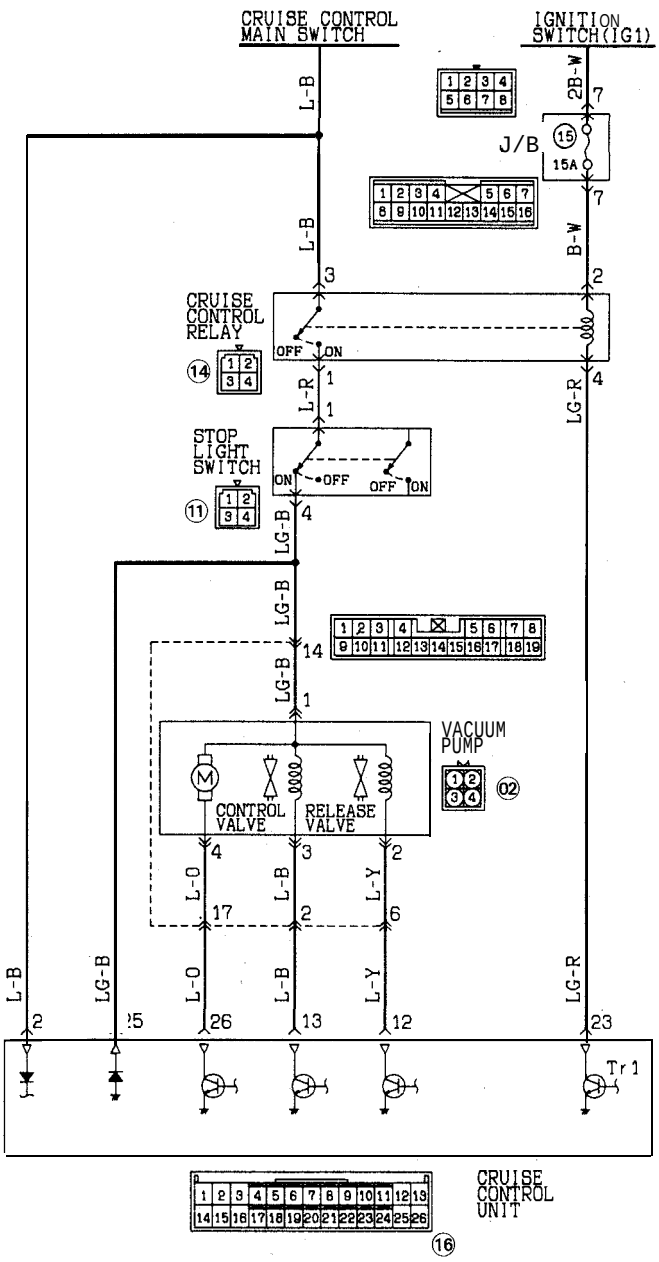

KX35-AK-R1303-N4C

DESCRIPTION OF OPERATION

The input signal from the control switch causes transistor Tr_1 to be ON. Accordingly, the cruise control relay is placed in the ON state to supply power to the vacuum pump assembly.

The vacuum pump assembly consists of a diaphragm type negative pressure pump that is driven by a DC motor, and two solenoid valves (control valve and relief valve) and is controlled by the control unit as shown in the following table.
When the brake pedal is depressed during cruise control operation, the power supply to the vacuum pump assembly is cut off.

Cruise control operation	DC motor (ON: Current flows) (OFF: No current flows)	Solenoid valve ON: open OFF: closed	
		Control valve	Relief valve
Acceleration	ON	ON	ON
Hold	OFF	ON	ON
Deceleration	OFF	OFF	ON
Release	OFF	OFF	‘OFF

TROUBLESHOOTING HINTS

Diagnosis No. 11 (Automatically canceled)

ECU terminal voltage

Terminal No.	Signal name	Condition	Terminal voltage
12	Relief valve drive signal	When relief valve is ON	0V
		When relief valve is OFF	Battery positive voltage
13	Control valve drive signal	When control valve is ON	0V
		When control valve is OFF	Battery positive voltage
26	DC motor drive signal	When DC motor is running	0V
		When DC motor is stationary	Battery positive voltage
25	Surge absorption circuit terminal	When main switch is ON	Battery positive voltage

6 Inspection of stop light switch circuit

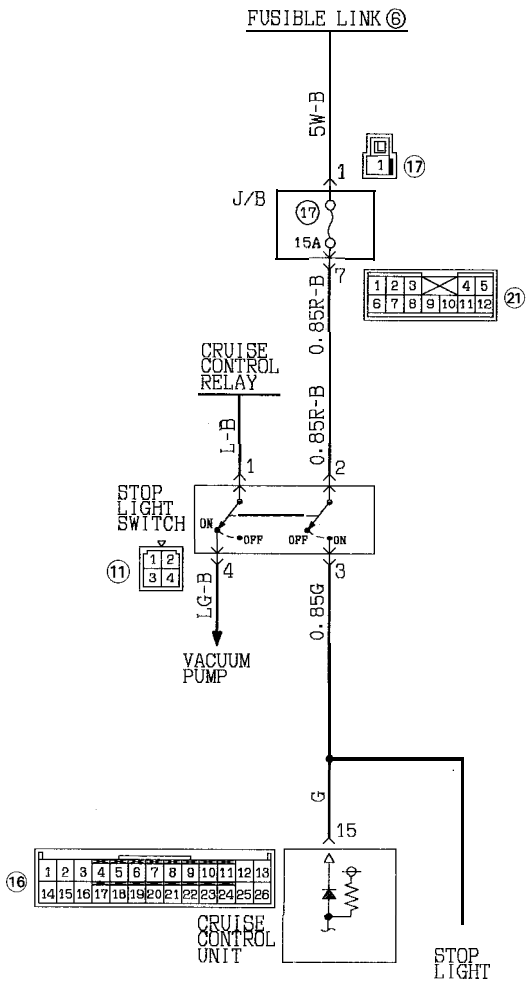

KX35-AK-R1306

DESCRIPTION OF OPERATION

When the brake pedal is depressed during vehicle speed control, the cruise control (NC) contact of the stop light switch is opened to interrupt the power supply to the vacuum pump assembly for cancellation of vehicle speed control. (Refer to P.14G-11.) At the same time, the stop light (NO) contact is closed. As a result, a cancel signal is input to the control unit which internally interrupts the vacuum pump assembly drive circuit.

TROUBLESHOOTING HINTS

ECU terminal voltage

Terminal No.	Signal name	Condition	Terminal voltage
15	Stop light switch	When brake pedal is depressed	Battery positive voltage
		When brake pedal is not depressed	0V

7 Inspection of clutch pedal position switch circuit <M/T>

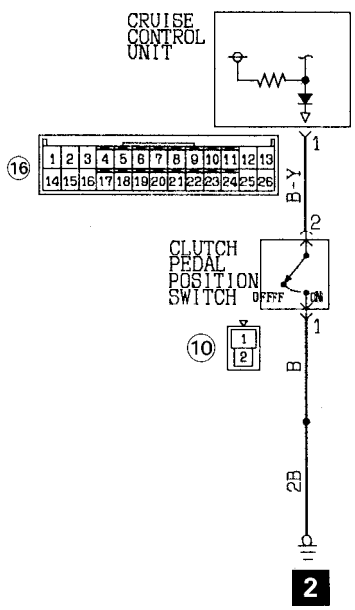

KX35-AK-R1307A

DESCRIPTION OF OPERATION

When the clutch pedal is depressed during vehicle speed control, the contact of the clutch pedal position switch is closed. As a result, a cancel signal is input to the control unit which internally interrupts the power supply to the vacuum pump assembly drive circuit for cancellation of vehicle speed control.

TROUBLESHOOTING HINTS

ECU terminal voltage

Terminal No.	Signal name	Condition	Terminal voltage
1	Clutch pedal position switch	When clutch pedal is depressed	0V
		When clutch pedal is not depressed	Battery positive voltage

8 Inspection of park/neutral position switch circuit <A/T>

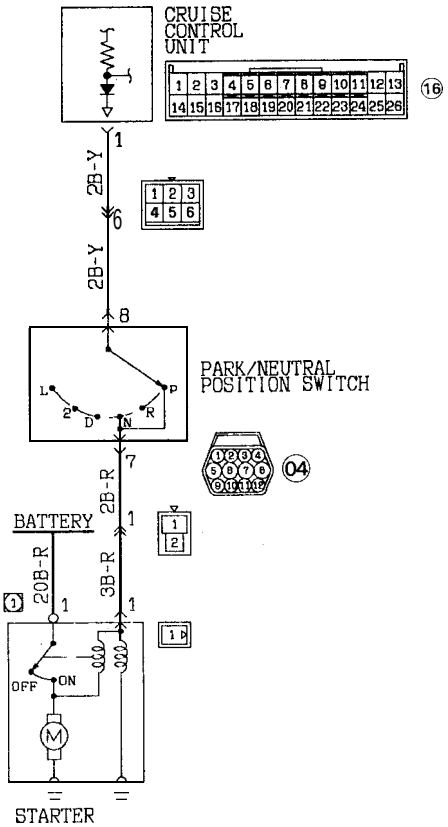

KX35-AK-R1307

DESCRIPTION OF OPERATION

The park/neutral position switch is interlocked with the starter switch.When the gear selector lever is placed in the "N" position during vehicle speed control, a cancel signal is input to the control unit which internally interrupts the power supply to the vacuum pump assembly drive circuit for cancellation of vehicle speed.

TROUBLESHOOTING HINTS

ECU terminal voltage

Terminal No.	Signal name	Condition	Terminal voltage
1	Park/neutral position switch	Park/neutral position switch in "N" or "P" position	ov
		Park/neutral position switch in "D", "2", "L" or "R"position	Battery positive voltage

9 Inspection of throttle position sensor circuit

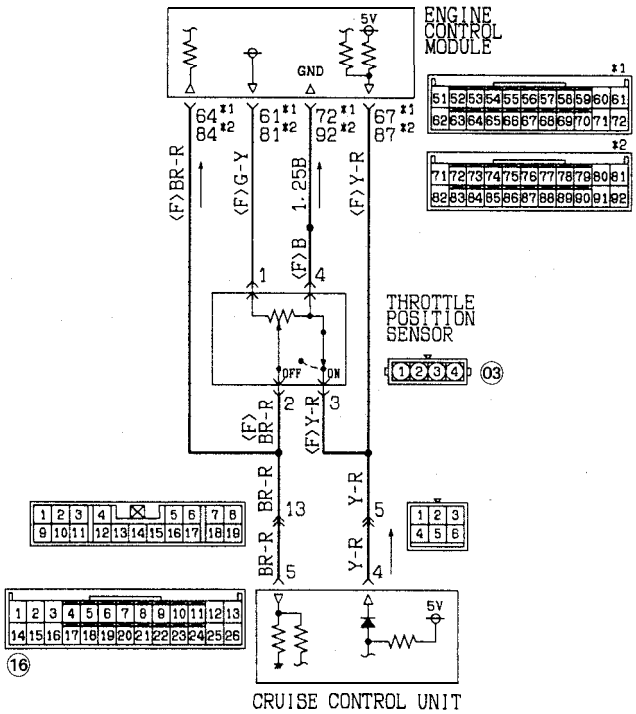

NOTE
*1: SOHC, DOHC NON TURBO (FEDERAL AND CANADA)
X2: URBOJ DOHC NON TURBO (CALIFORNIA)

KX35-AK-R1301-N4C

DESCRIPTION OF OPERATION

The throttle position sensor (with built-in closed throttle position switch) is used for engine control as well as cruise control.
The throttle position sensor sends data to the control unit, regarding the opening of the accelerator. The closed throttle position switch inputs the data to the control unit on whether or not the accelerator pedal is operated.

TROUBLESHOOTING HINTS

Diagnosis No. 17 (Not automatically canceled)

ECU terminal voltage

Terminal No.	Signal name	Condition	Terminal voltage
4	Closed throttle position switch	When accelerator pedal is depressed	0V
		When accelerator pedal is not depressed	4.5 – 5.5V
5	Throttle position sensor	During idle	0.48 – 0.72V
		When fully opened	4.0 – 5.5V

10	Inspection of circuits associated with overdrive cancel <A/T>

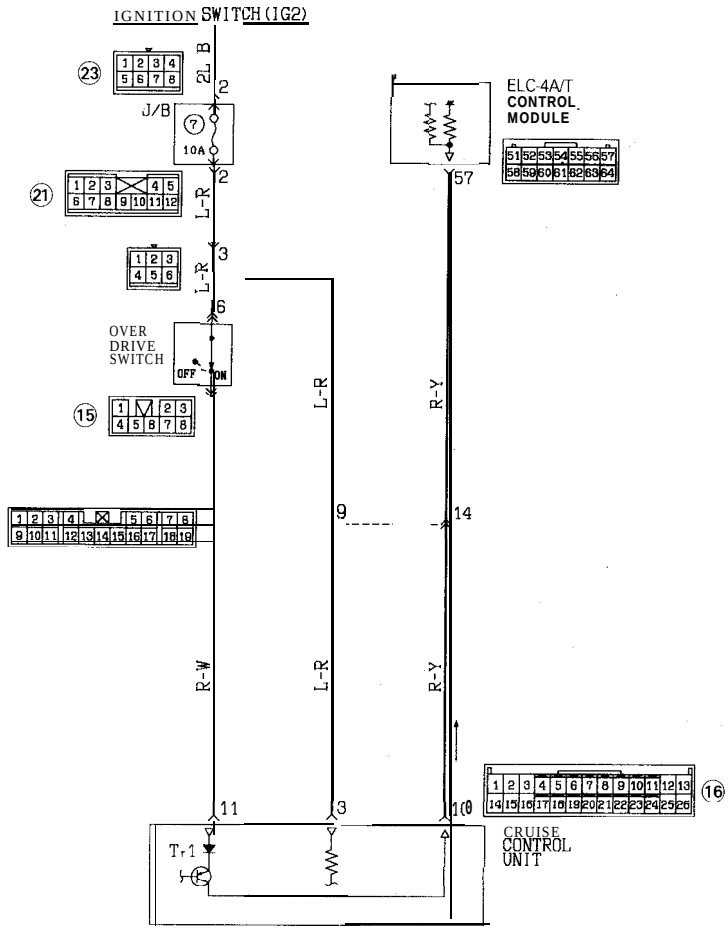

KX35-AK-R1310

DESCRIPTION OF OPERATION

On a vehicle with cruise control, the OD switch ON signal is input through the cruise control unit to the ELC-4A/T control module.

When the vehicle speed control is in the overdrive mode, if the actual vehicle speed falls more than about 7 km/h (4 mph) below the set vehicle speed or the RESUME switch is turned ON, the cruise control unit forces transistor Tr_1 into the OFF state. This cancels the overdrive mode because no OD switch ON signal is input to the ELC-4A/T control module.

TROUBLESHOOTING HINTS

ECU terminal voltage

Terminal No.	Signal name	Condition	Terminal voltage
3	OD signal control power supply	When ignition switch is ON	Battery positive voltage
10	ELC-4A/T control module	When overdrive mode is active	Battery positive voltage
		When overdrive mode is inactive	ov
11	OD switch	When OD switch is ON	Battery positive voltage
		When OD switch is OFF	ov

ON-BOARD DIAGNOSTIC CHECKING

On-board diagnostic checking is performed when there has been an automatic cancellation, without cancel switch operation.

NOTE
Even when the ignition key is placed in the OFF position, all diagnostic trouble codes are stored and retained, until the battery cable is disconnected, to make sure that the problems encountered in the past can be checked.

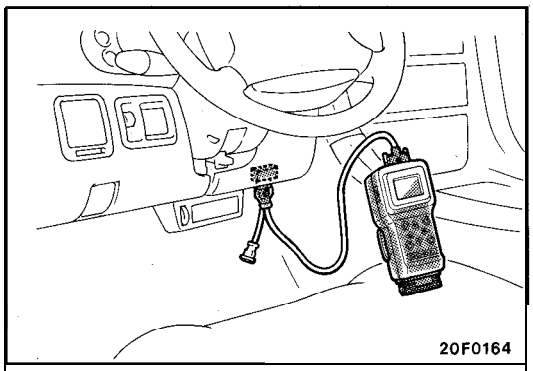

WHEN USING THE SCAN TOOL

(1) Connect the scan tool to the data-link connector to read out the diagnostic trouble codes.

Caution
Turn off the ignition switch beforehand whenever the scan tool is connected or disconnected.

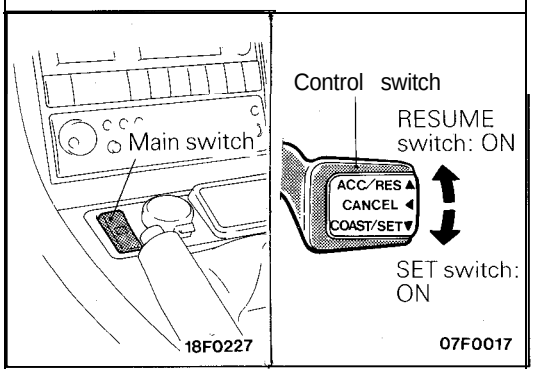

(2) Clear the diagnostic trouble codes by the following procedure.
① Place the ignition switch in the ON position.
② With the SET switch in the ON state, set the main switch to ON. In less than 1 .0 second thereafter, set the RESUME switch to ON.
③ With the SET switch in the ON state again, keep the stop light switch in the ON state for more than 5 seconds.
④ Temporarily place the main switch in the OFF position to let the control unit escape from the input check mode. Then place the main switch in the ON position again.
⑤ Check the diagnostic trouble code to verify that a normal code is output.

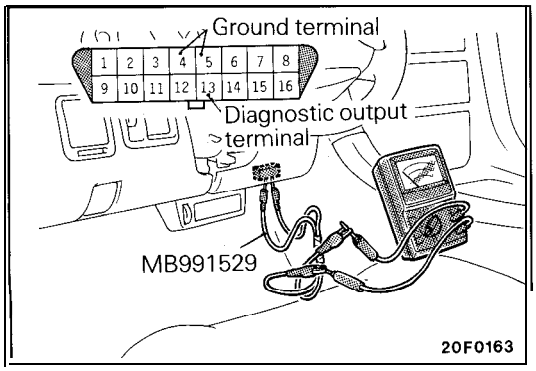

WHEN USING THE VOLTMETER

Connect a voltmeter to the diagnostic output terminal and the ground terminal of the data-link connector using the special tool. Observe the voltmeter pointer deflection to read out the diagnostic trouble codes.

DIAGNOSIS DISPLAY PATTERNS AND CODES

Code No.	Display patterns (output codes) (Use with voltmeter)	Probable cause	Check chart No.
11	The same pattern repeatedly displayed	Vacuum pump assembly drive output system out of order	5
12		Vehicle speed signal system out of order	4
15		Control switch out of order (When SET or RESUME switch is kept in ON state continuously for more than 60 seconds)	2
16		Control unit out of order	–
17*		Throttle position sensor or closed throttle position switch out of order	9

Normal code

12A010

NOTE
1. When two or more problems occur simultaneously, the three latest code numbers are displayed in the order of lowest code number first.
2. Even if the problem represented by the code number marked * occurs during cruise control operation, the cruise control mode will not be canceled.
3. When the system is normal, the diagnostic trouble code is displayed as described below.
   ① If a scan tool is used:
   "No abnormality" will be displayed.
   ② If a voltmeter is used:
   Continuous ON/OFF signals will be displayed at 0.5 second intervals. (Refer to the illustration at the left.)

INPUT CHECKING

Input checks should be made when the cruise control system cannot be set and when it is necessary to check (when a malfunction related to the cruise control system occurs) whether or not the input signals are normal.

NOTE
1. If inspection of on-board diagnostic is necessary, confirm diagnostic trouble code first and conduct input check.
2. Input check can be conducted by set operations. On-board diagnostic terminal outputs display patterns.
3. Display codes are displayed only if the circuit is normal according to the conditions shown in the table on the next page.

Perform checks using the following procedures.

(1) Connect a scan tool or a voltmeter to the data link connector.

NOTE
Connect a voltmeter using the same procedure as for inspection of diagnostic output.

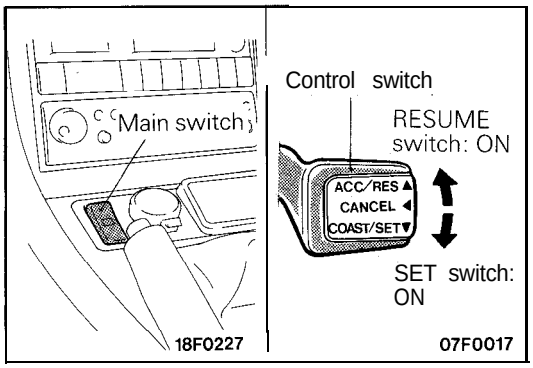

(2) Calling up a code

① Set the ignition switch to ON.

② With the SET switch in the ON state, set the main switch to ON. In less than 1 .0 second thereafter, set the RESUME switch to ON. Then the input check results can be displayed.

(3) Reading a code

① Perform the individual input operations according to the input check table and read the codes.

NOTE

1. When two or more input operations are performed simultaneously, all the associated code numbers are output in ascending order.
2. If no code is output by performing any of the input operations, the control unit power supply circuit or SET and RESUME switches are probably defective. Check the check tables 1 and 2 (P.14G-7, 8).

INPUT CHECK TABLE

Code No.	Display patterns (output codes) (use with voltmeter)	Input operation		Check results
21		SET switch ON		SET switch circuit normal
22		RESUME switch ON		RESUME switch normal
23		Stop light switch ON (brake pedal depressed)		Stop light switch circuit normal
24		Vehicle speed more than approx. 40 km/h (25 mph)		Vehicle speed sensor circuit normal if code Nos. 24 and 25 are displayed
25		Vehicle speed less than approx. 40 km/h (25 mph)		
26	A/T	M/T	Clutch pedal position switch ON (clutch pedal depressed)	Clutch pedal position switch circuit normal
			Park/neutral position switch ON (SELECT lever placed in "N" position)	Park/neutral position switch circuit normal
27		CANCEL switch ON		CANCEL switch circuit normal
28		TPS output voltage 1.5 V or more (Accelerator pedal depressed more than half the way)		Throttle position sensor circuit normal
29		Closed throttle position switch OFF (Accelerator pedal depressed)		Closed throttle position switch circuit normal

② **Set** main switch to **OFF.**

HARNESS AND COMPONENT LAYOUT

ENGINE COMPARTMENT

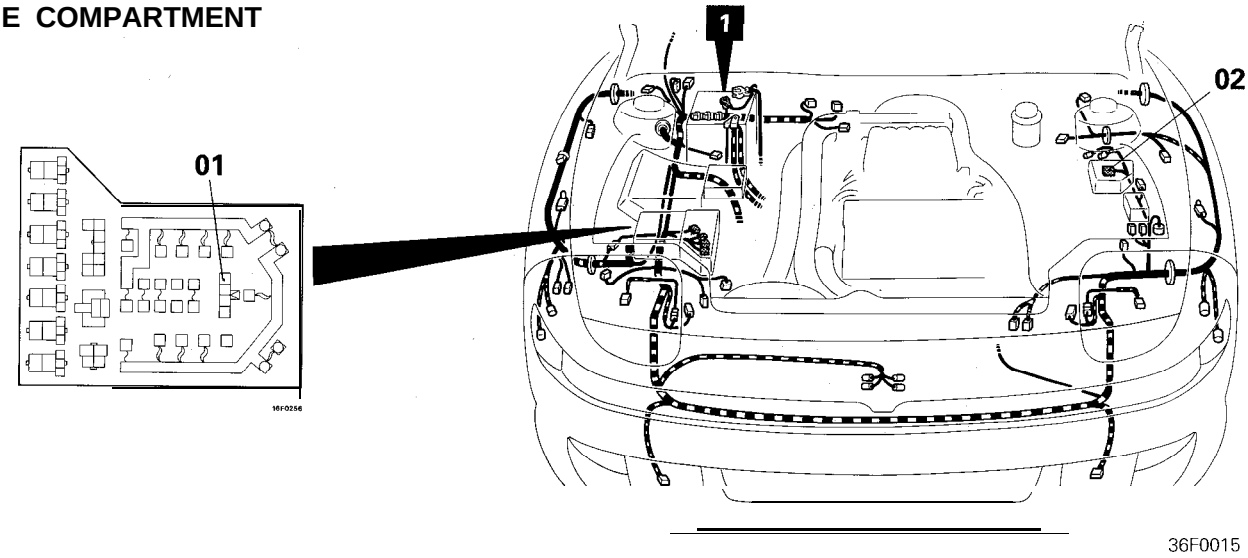

01 Jumper connector
02 Vacuum pump
03 Throttle position sensor
04 Park/neutral position switch <A/T>
05 Vehicle speed sensor

Engine front view

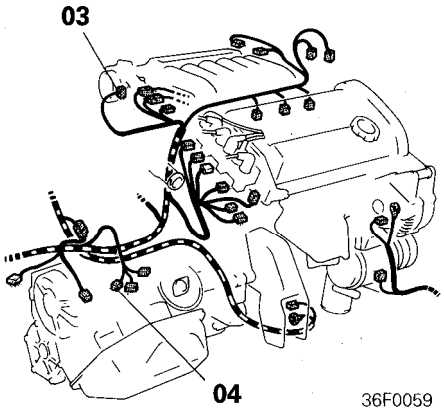

Engine rear view

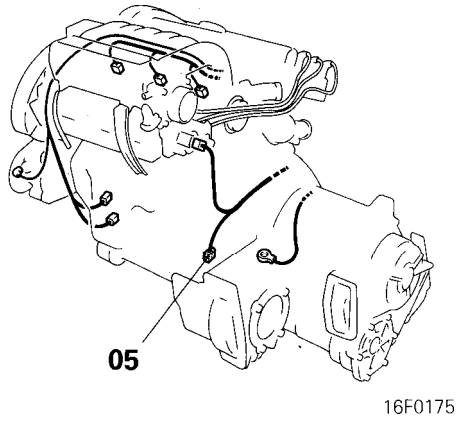

INSTRUMENT PANEL AND FLOOR CONSOLE

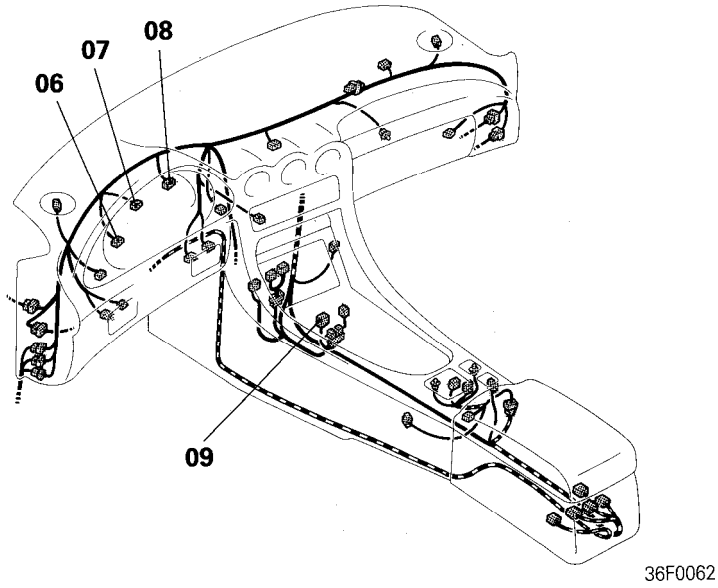

06 }
07 } Combination meter
08 }
09 Main switch

DASH PANEL

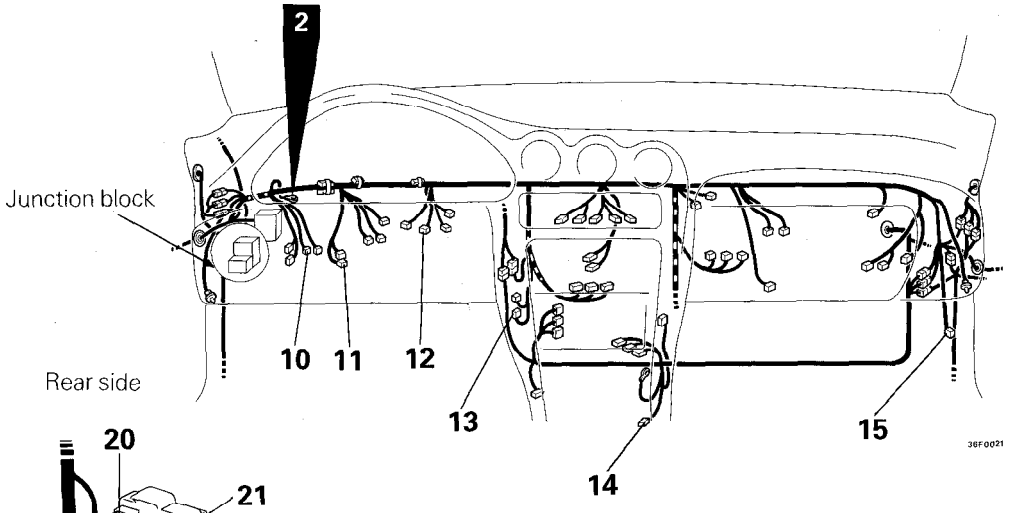

JUNCTION BLOCK

Front side

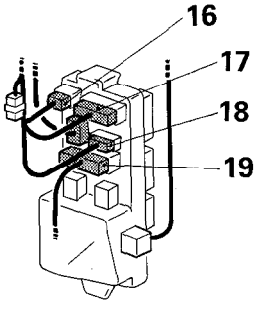

Rear side

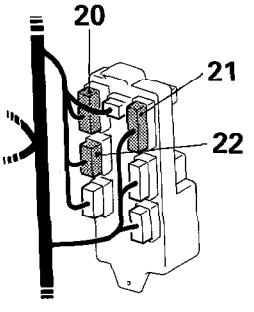

10 Clutch pedal position switch <M/T>
11 Stop light switch
12 Clock spring
13 Cruise control relay

14 Over drive switch <A/T>
15 Cruise control unit
16, 17, 18 } Front wiring harness and junction block combination
19 Adapter wiring harness and junction block combination

20, 21, 22 } Body wiring harness (LH) and junction block combination

LOCATION OF CONTROL UNIT AND RELAY

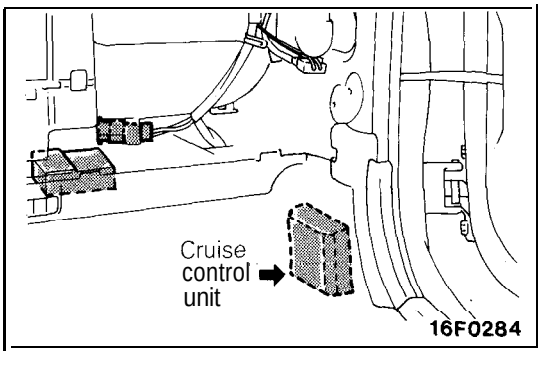

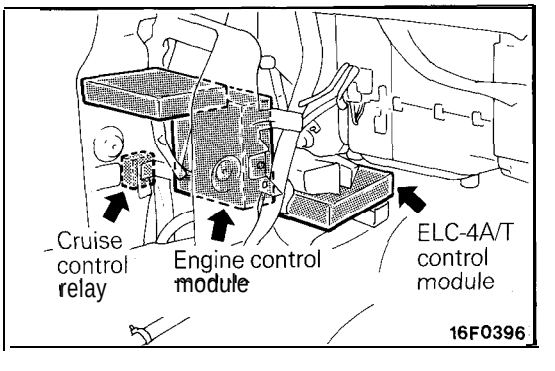

GROUND POINT

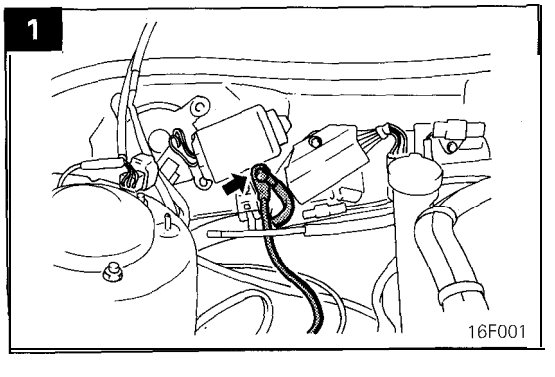

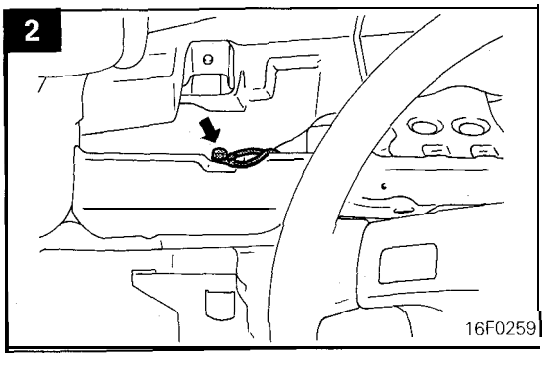

SERVICE ADJUSTMENT PROCEDURES

CRUISE CONTROL CABLES INSPECTION AND ADJUSTMENT

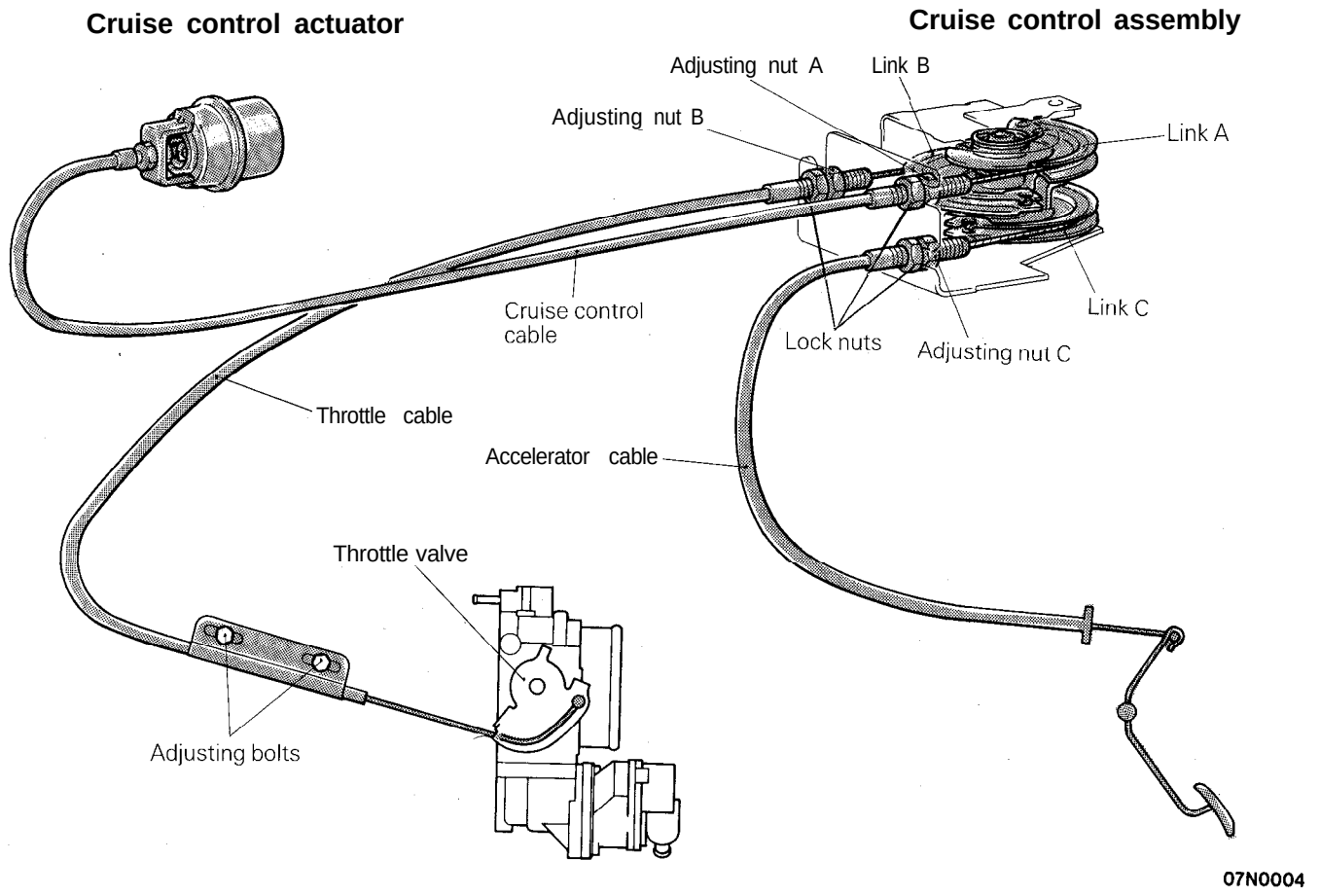

(1) Set the air conditioning, lights and other switches to OFF for inspection at no load.
(2) Let the engine warm up until it runs at idle.
(3) Check that the idle speed is within the specified range.
(4) Stop the engine and set the ignition switch to OFF.
(5) Check that the accelerator cable, cruise control cable and throttle cable are routed without sharp bends.
(6) Depress the accelerator pedal to check that the throttle lever moves smoothly from the fully-closed to fully-opened position.
(7) Check the free travel state of the inner cables of the accelerator cable, cruise control cable and throttle cable.
(8) If the inner cables are too loose or have no free travel at all, check using the following procedure.
① Remove the link protector.
② Loosen the adjusting and lock nuts of the throttle lever and intermediate links A, B and C to place the throttle lever and intermediate links A, B and C in the free state.

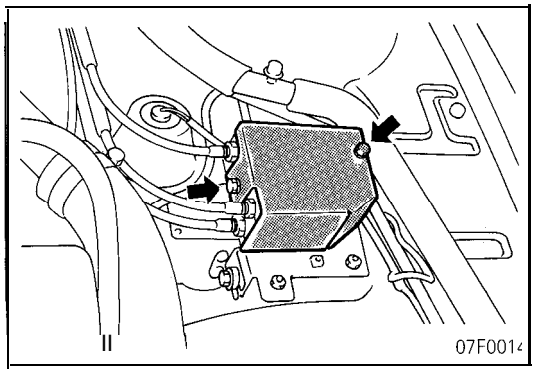

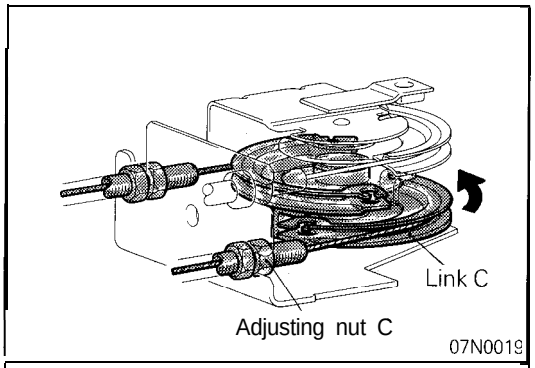

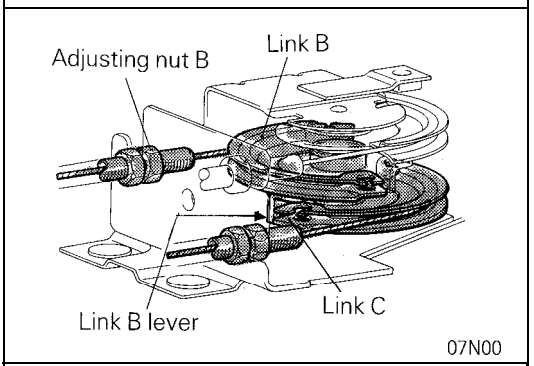

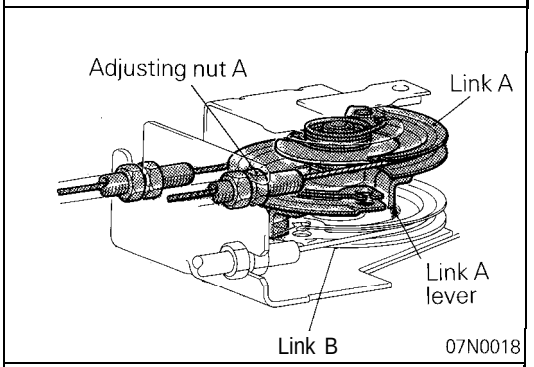

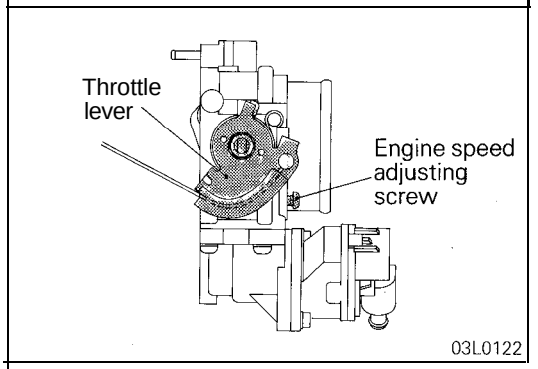

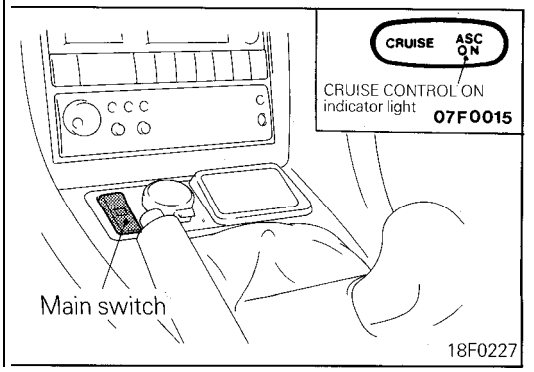

③ Set the ignition switch to ON (do not start the engine).

④ Rotate intermediate link C in the direction shown until it is blocked by the stopper, turn down adjusting nut C in the direction that the free travel of the inner cable is reduced, and back off adjusting nut C the specified number of turns just before intermediate link C begins to move.

Amount adjusting nut C is to be backed off:

<M/T> About 1/2 turn [inner cable free travel 0 – 1 mm (0 – .04 in.)]

<A/T> About two turns [inner cable free travel 2 to 3 mm (.08 to .12 in.)]

⑤ Secure the accelerator cable with the lock nut.

⑥ Turn down adjusting nut B in the direction that the free travel of the inner cable of the throttle cable is reduced. At the position where the lever of intermediate link B is brought into contact with intermediate link C, back off adjusting nut B the specified number of turns.

Amount adjusting nut B is to be backed off:

About one turn [inner cable free travel 1 to 2 mm (.04 to .08 in.)]

⑦ Secure the throttle cable with the lock nut.

⑧ Secure the adjusting bolt of the intake manifold plenum.

⑨ Turn down adjusting nut A in the direction that the free travel of the inner cable of the cruise control cable is reduced. At the position where the lever of intermediate link A is brought into contact with intermediate link B, back off adjusting nut A the specified number of turns.

Amount adjusting nut A is to be backed off:

About one turn [inner cable free travel 1 to 2 mm (.04 to .08 in.)]

⑩ Secure the cruise control cable with the lock nut.

⑪ After adjustment, check to see that the end of the engine speed adjusting screw is in contact with the stopper of the throttle lever.

CRUISE CONTROL SYSTEM INSPECTION

CRUISE CONTROL MAIN SWITCH CHECK

(1) Turn the ignition key to ON.

(2) Check to be sure that the CRUISE CONTROL ON indicator light within the combination meter illuminates when the main switch is switched ON.

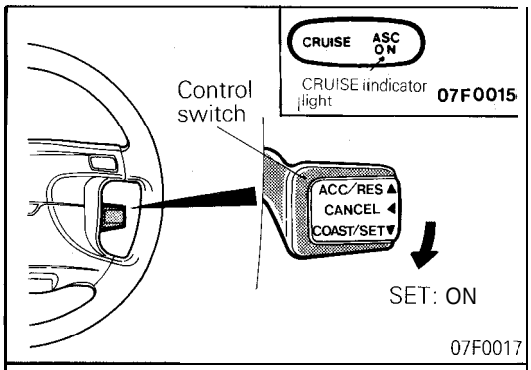

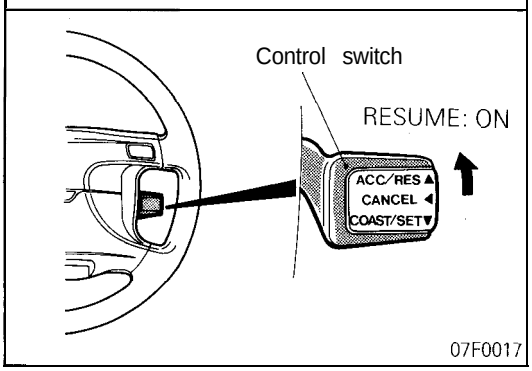

CRUISE CONTROL SETTING CHECK

(1) Switch ON the main switch.
(2) Drive at the desired speed within the range of approximately 40 – 200 km/h (25 – 124 mph).
(3) Operate the control switch downward. (SET switch: ON)
(4) Check to be sure that the speed is the desired constant speed when the switch is released, and also check to be sure that the CRUISE indicator light (within the combination meter) illuminates.

NOTE
If the vehicle speed decreases to approximately 15 km/h (9 mph) below the set speed, because of climbing a hill for example, the cruise control will be cancelled.

SPEED-INCREASE SETTING CHECK

(1) Set to the desired speed.
(2) Operate the control switch upward. (RESUME switch: ON)
(3) Check to be sure that acceleration continues while the switch is held, and that when it is released the constant speed at the time when it was released becomes the driving speed.

NOTE
Even if, during acceleration, the vehicle speed reaches or exceeds the high limit [approximately 200 km/h (124 mph)], acceleration will continue, however, when the switch is released, the set speed ("memorized speed") will become the high limit of the vehicle speed.

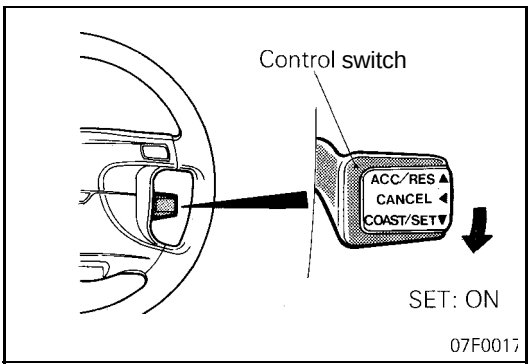

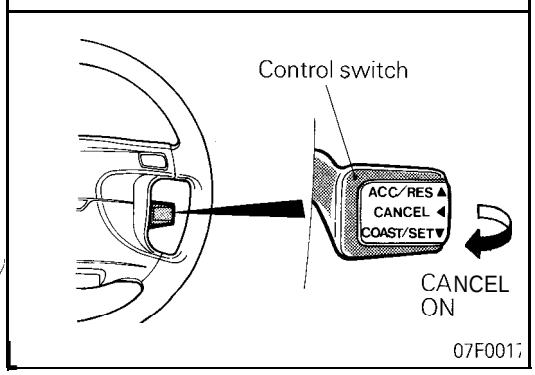

SPEED REDUCTION SETTING CHECK

(1) Set to the desired speed.
(2) Operate the control switch downward. (SET switch: ON)
(3) Check to be sure that deceleration continues while the switch is held, and that when it is released the constant speed at the time when it was released becomes the driving speed.

NOTE
When the vehicle speed reaches the low limit [approximately 40 km/h (25 mph)] during deceleration, the cruise control will be cancelled.

CRUISE CONTROL CANCELLATION AND SET SPEED RESUME CHECK

(1) Set cruise control.
(2) In the cruising condition of the cruise control mode, check that when any of the following operations are performed, the normal drive mode is restored and the vehicle coasts smoothly.
  ① Move the control switch toward you. (CANCEL switch: ON)
  ② Depress the brake pedal.
  ③ Depress the clutch pedal. <M/T>
  ④ Place the gear selector lever in the N range. <A/T>

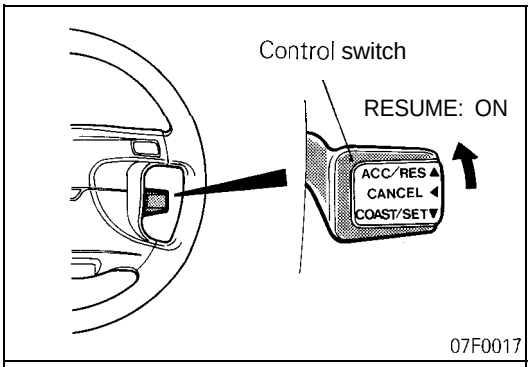

(3) With the vehicle at a speed of more than about 40 km/h (25 mph), check that when the control switch is moved upward (RESUME switch: ON), the vehicle resumes cruising at the speed held before cancellation of the cruise control mode.
(4) In the cruise control mode, check that when the main switch is set to OFF, the normal drive mode is restored and the vehicle coasts smoothly.

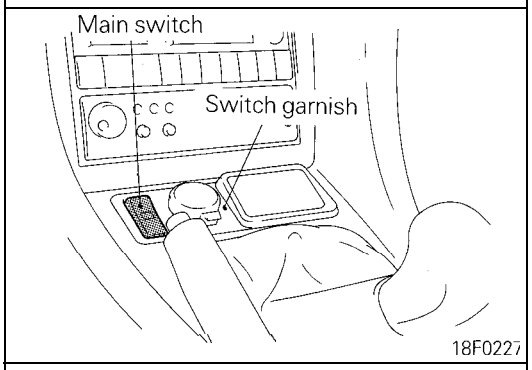

INDIVIDUAL PARTS INSPECTION

CRUISE CONTROL MAIN SWITCH INSPECTION

(1) Remove the main switch together with the switch garnish.
(2) Remove the main switch from the switch garnish.

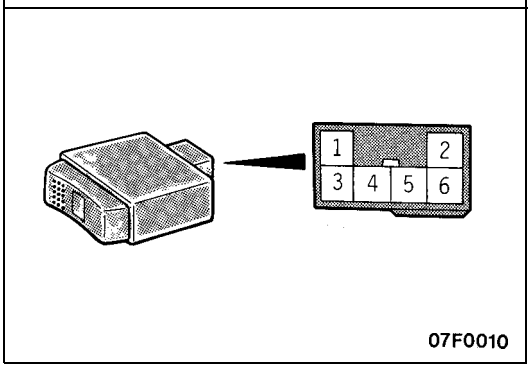

(3) Operate the main switch and check for continuity across the individual terminals.

Terminal No. / Switch state	6	ILL	2	3	4	1
Press OFF.	○	⊘	○			
Neutral position	○	⊘	○		○	○
Press ON.	○	⊘	○	○	○	○

NOTE
(1) O-O denotes continuity across the terminals.
(2) ILL: Illumination light

(4) Connect a positive lead from the battery to terminal ③ and a negative lead from the battery to terminal ④ and check that battery voltage is available across terminal ① and the ground during the period the ON side of the main switch is pressed and during the period before the OFF side is pressed thereafter.
Check that when the OFF side of the main switch is pressed thereafter, the battery voltage available across terminal ① and the ground is reduced to 0 V.

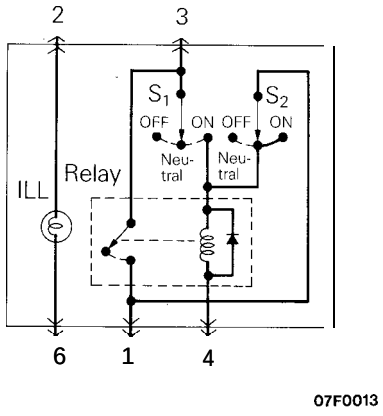

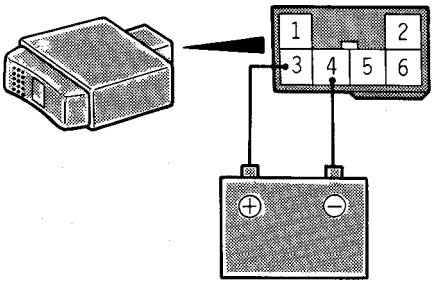

CRUISE CONTROL SWITCH INSPECTION

(1) Remove the air bag module using the following procedure.

① Remove the negative terminal of the battery and wait for more than 60 seconds.

Caution
The capacitor in the SRS diagnosis unit retains enough voltage to deploy the air bag for a given period even after disconnection of the battery. If an operation is performed during that given period, unintended deployment of the air bag could result and cause serious injury.

② Remove the air bag module. To remove the clock spring connector (squib connector) from the air bag module, force the lock outward and pry it with a plain screwdriver as shown at left so that no undue force will be exerted on the connector when it is removed.

③ The removed air bag module should be stored in a clean, dry, flat place with the pad side up.

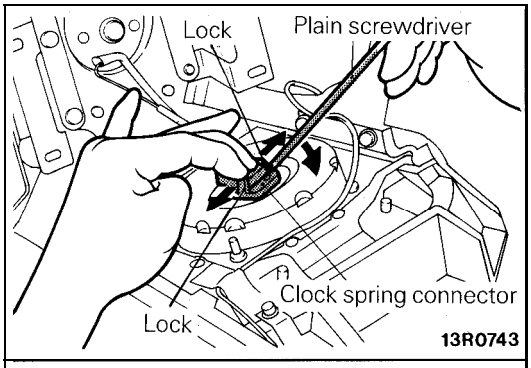

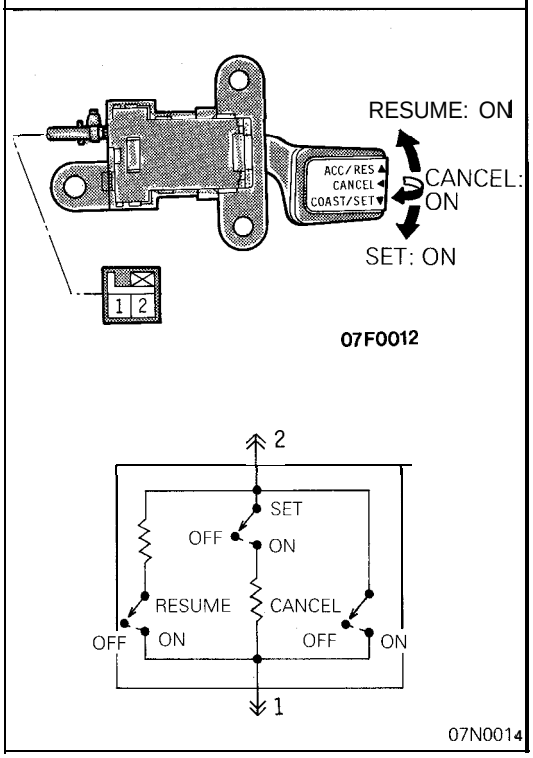

(2) Disconnect the connector of the control switch and operate the control switch to measure the resistance between the individual terminals.
If the readings are as shown below, the control switch may be considered good.

Switch operation	Resistance between terminals
When switch is not operated	No continuity
When switch is operated toward you (CANCEL switch: ON)	Approx. 0 Ω
When switch is operated upward (RESUME switch: ON)	Approx. 820 Ω
When switch is operated downward (SET switch: ON)	Approx. 2,700 Ω

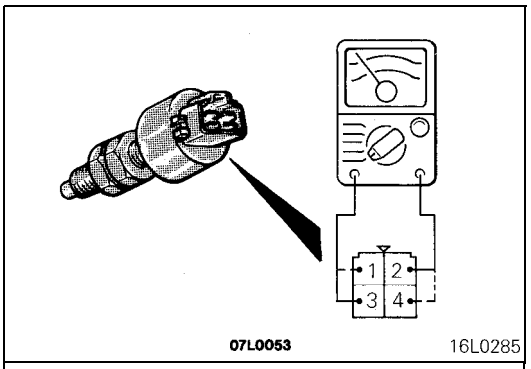

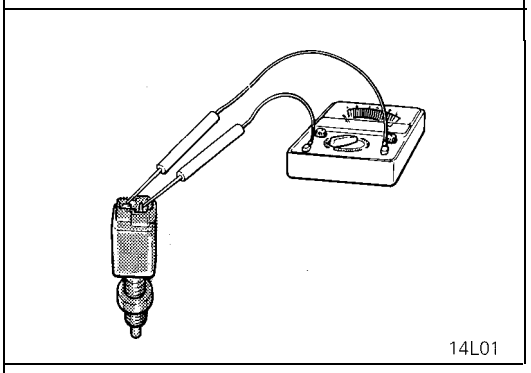

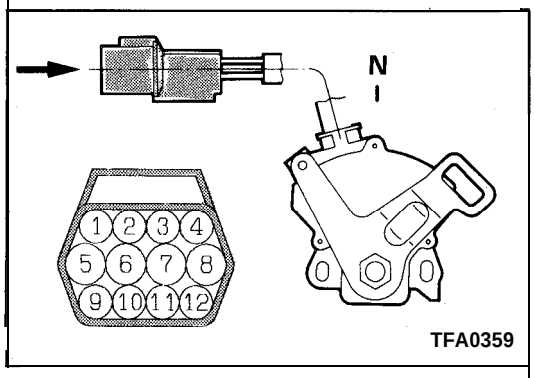

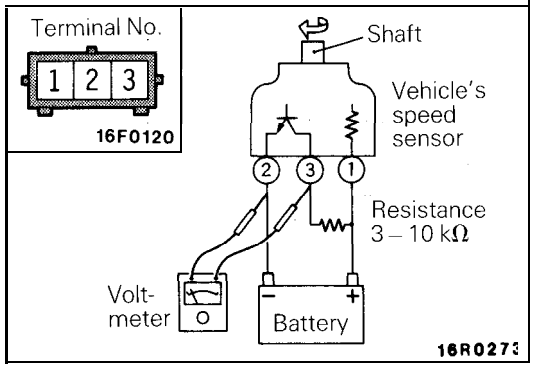

STOP LIGHT SWITCH/BRAKE SWITCH INSPECTION

(1) Disconnect the connector.
(2) Check for continuity between the terminals of the switch.

O-O: Continuity

Measurement conditions \ Switch / Terminal	Brake switch		Stop light switch	
	1	4	2	3
When brake pedal depressed.			O——O	
When brake pedal not depressed.	0——0			

CLUTCH PEDAL POSITION SWITCH INSPECTION <M/T>

(1) Disconnect the connector.
(2) Check that there is continuity between the terminals when the clutch pedal is depressed, and that there is no continuity when the pedal is released.

PARK/NEUTRAL POSITION SWITCH ("N" POSITION) INSPECTION <A/T>

(1) Disconnect the connector.
(2) Check to be sure that there is continuity between connector terminals @and @when the shift lever is moved to the "N" range.

VEHICLE SPEED SENSOR INSPECTION

(1) Remove the vehicle's speed sensor and connect as shown in the illustration, using a 3 – 10 kΩ resistance.
(2) Use a voltmeter to check for voltage at terminals ② and ③ when the pulse generator shaft is turning. (One revolution is four pulses.)

THROTTLE POSITION SENSOR INSPECTION

For inspection, refer to P.14A-95.

CLOSED THROTTLE POSITION SWITCH INSPECTION

For inspection, refer to P.14A-98.

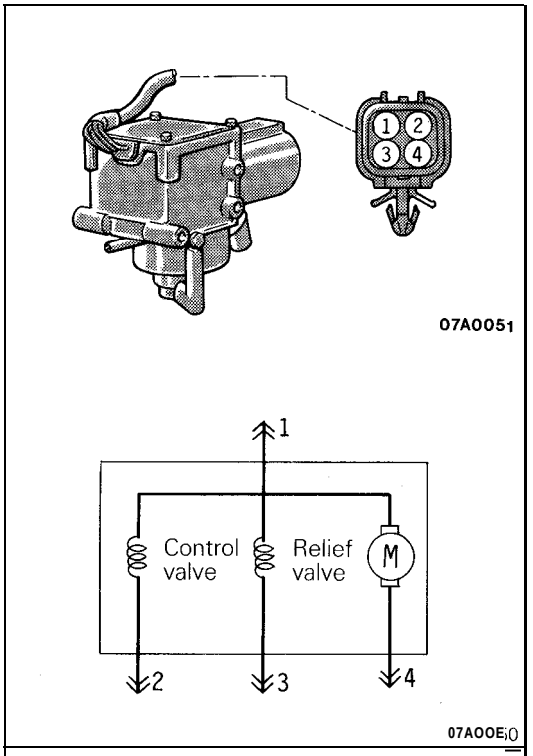

VACUUM PUMP INSPECTION

Inspection of Solenoid Valves (Control and Relief Valves)

(1) Disconnect the connector of the vacuum pump assembly.
(2) Measure the resistance values across terminals ① and ② and across terminals ① and ③.

Standard value: 50 – 60 Ω

(3) Check that when the battery voltage is applied across terminals ① and ② and across terminals ① and ③, the operating sounds of the solenoid valves are heard.
(4) If the solenoid valves are defective, replace the vacuum pump assembly.

Inspection of Motor

(1) Disconnect the connector of the vacuum pump assembly.
(2) Check that when the battery voltage is applied across terminals ① and ④, the motor operates.

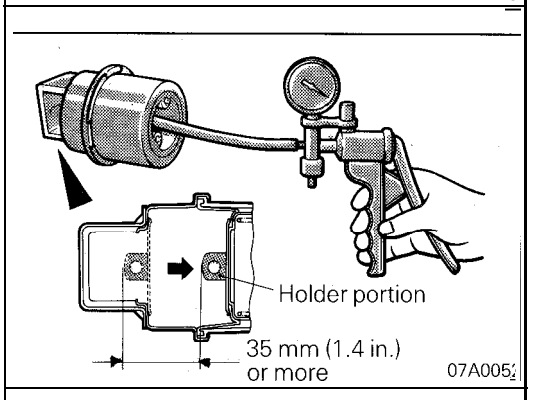

ACTUATOR INSPECTION

(1) Remove the actuator.
(2) Using a vacuum pump, apply a negative pressure to the actuator to check that the holder portion moves more than 35 mm (1.4 in.). Retain the negative pressure in that state to check that the holder portion does not change its position.
(3) After the actuator has been mounted, check and adjust the cruise control cable. (Refer to P.14G-21.)

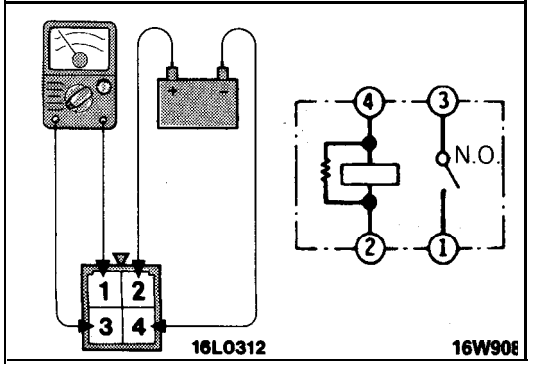

CRUISE CONTROL RELAY INSPECTION

(1) Remove the cruise control relay.
(2) Apply battery power to terminal 2 and connect terminal 4 to the ground. Check for continuity across the terminals.

When power is supplied	Across terminals I-3	Continuity provided
When no power is supplied	Across terminals 1-3	No continuity provided
	Across terminals 2-4	Continuity provided

CRUISE CONTROL SYSTEM

REMOVAL AND INSTALLATION

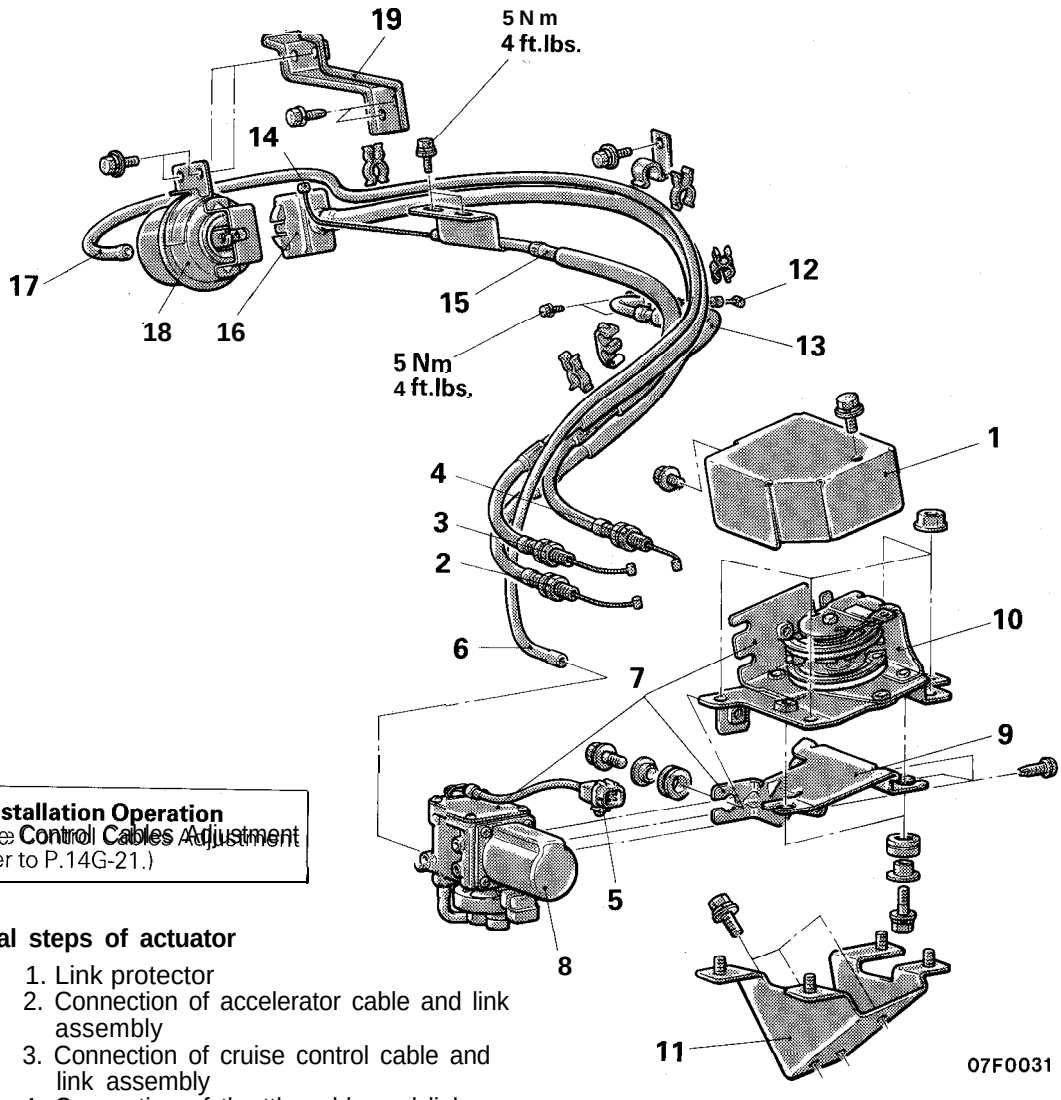

Post-installation Operation
- Cruise Control Cables Adjustment (Refer to P.14G-21.)

Removal steps of actuator

1. Link protector
2. Connection of accelerator cable and link assembly
3. Connection of cruise control cable and link assembly
4. Connection of throttle cable and link assembly
5. Vacuum pump connector
6. ➡◆ Connection of vacuum hose and vacuum pump
7. Link assembly and vacuum pump
8. Vacuum pump
9. Pump bracket
10. Link assembly
11. Link bracket
12. Connection of accelerator cable and accelerator pedal
13. Accelerator cable
14. Connection of throttle cable and throttle body
15. Throttle cable
16. Actuator and actuator bracket
17. Connection of cruise control cable and actuator
18. Actuator
19. Actuator bracket

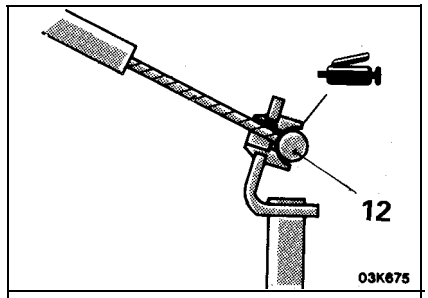

Grease: MOPAR Multi-mileage Lubricant Part No. 2525035 or equivalent

CAUTION: SRS
Before removal of air bag module, refer to GROUP 23B – SRS Service Precautions and Air Bag Module and Clock Spring.

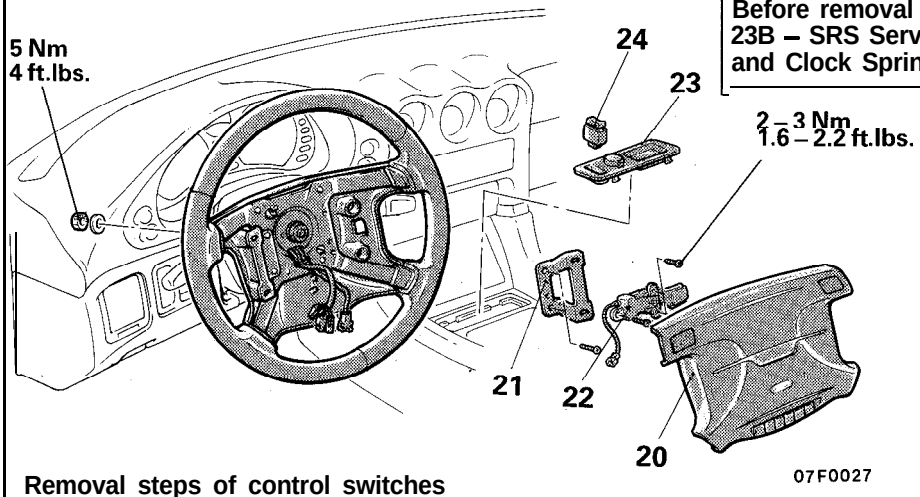

Removal steps of control switches

20. Air bag module
    (Refer to GROUP 23B -Air Bag Module and Clock Spring.)
21. Air bag module bracket
22. Cruise control switch
23. Switch garnish
24. Main switch

Removal steps of control unit and relay

25. Scuff plate (R.H.)
26. Cowl side trim (R.H.)
27. Cruise control unit
28. Cruise control relay

Removal steps of sensors and switches

29. Throttle position sensor
30. Stop light switch
31. Clutch pedal position switch <M/T>
32. Vehicle speed sensor
    (Refer to GROUP 8 – Meters and Gauges.)
33. Park/neutral position switch <A/T>

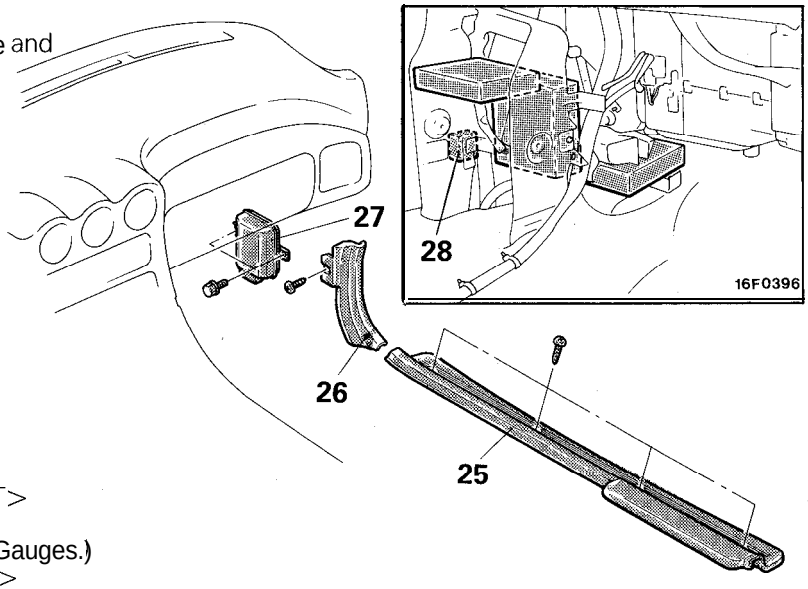

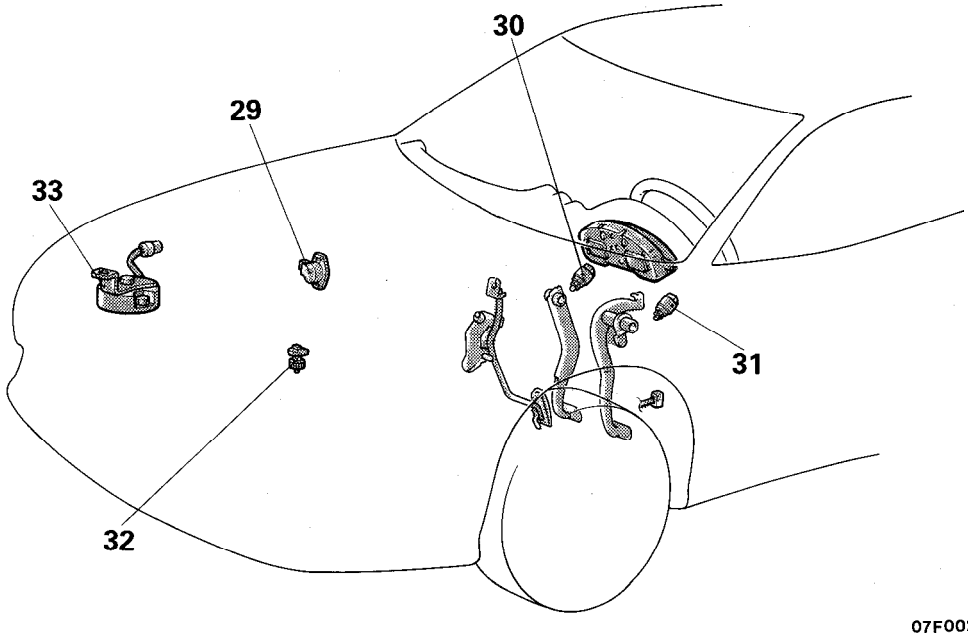

INSPECTION

- Check the inner and outer cable for damage.
- Check the cable for smooth movement.
- Check the link protector for damage.

INSPECTION OF INDIVIDUAL PARTS

Refer to Service Adjustment Procedures – Individual Parts Inspection (P.14G-24).

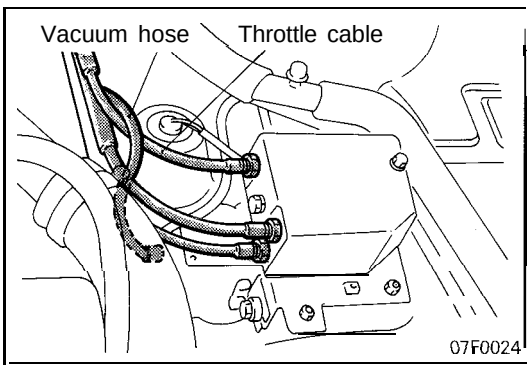

SERVICE POINT OF INSTALLATION

6. CONNECTION OF VACUUM HOSE TO VACUUM PUMP

Route the vacuum hose over the throttle cable and connect the hose to the vacuum pump so as to prevent the slackened hose from interfering with other parts.