GENERAL REQUIREMENTS FOR CARS AND DRIVERS

Schedule N - Fuel Tanks and Refuelling

Part I - Fuel Tanks

(State Level and above Race Meetings only)

1. 1ST CATEGORY CARS

1.1 It is compulsory for ~~all cars of~~ **each** Formula Holden~~, in championship races all cars of~~ **and** Formula 2 **car**, and ~~all cars~~ **each car** with a fuel capacity in excess of 50 litres, to be equipped with **a** fuel tank**/**s either fitted with **a** ~~CAMS approved~~ **fuel tank** foam, or fitted with a safety-type fuel tank as approved by the FIA.

1.2 Tank fillers and caps must not protrude beyond the coachwork. The caps must be designed in such a way as to ensure an efficient locking action which reduces the risk of an external opening following a crash impact or incomplete locking after refuelling. Fillers must be placed away from points which are vulnerable in case of a crash. The air vents must be located at least 250mm to the rear of the cockpit.

~~1.3 From a date to be advised, it will be compulsory for all cars of Formula 2 and all cars with a fuel capacity in excess of 50 litres to be fitted with a safety-type fuel tank, of a type as will be specified by FIA.~~

~~1.4 From a date to be advised, it will be required that that part of the structure surrounding the fuel tank which is in direct contact with the air stream must include an aluminium sheet of a to-be-determined thickness, tensile strength and elongation.~~

1.3 ~~All~~ **Each** Formula 2 ~~cars~~ **car** first registered with CAMS after 1 January, 1977, and all those in which the fuel tank is within 100mm of the outside surface of the car, shall be fitted with a crushable structure.

1.4 It is recommended that car owners adopt as a guide the following specifications for the fuel tank surround, and incorporate this in their cars:

1.5

Thickness	1.5mm
Material	Aluminium
Tensile strength	215 MPa
Minimum elongation	5%

2. CARS OF THE 2ND, 3RD AND 4TH CATEGORIES

2.1 ~~Cars~~ **Each car** of the 2nd Category must be fitted with fuel tank**/**s of capacity no greater than specified in 2.7 below. The fuel tank**/**s must be fitted with ~~anti-spray~~ **a fuel tank** foam ~~in conformity with CAMS Standard~~ or the tank**/**s must be of a safety type approved by the FIA. In races of less than 30 minutes' duration, road-registered cars need not comply with this requirement.

2.2 From 1 January, 1974, all vehicles not previously registered with CAMS or of a model for which a log book has not previously been issued, must be fitted with fuel tanks of capacity no greater than specified in 2.7 below.

2.3 In 3rd Category vehicles, unless otherwise specified in the Group Regulations, it is permitted to replace original fuel tanks with FIA bladder tanks provided the fuel capacity does not exceed that specified in 2.7 below.

© Confederation of Australian Motor Sport Ltd. All use subject to Conditions of Use at *www.camsmanual.com.au*

2.4 Should "dry-break" fuel couplings be fitted then a FIA-approved tank is required (see 2.5 below for exception). The fuel filling port must then be relocated and in such relocation:

(i) the original fuel port/s shall be rendered inoperative;

(ii) the valve receiver mounting must be installed in the appropriate external panel in such a way as to prevent entry of fuel into the boot compartment in the event of spillage;

(iii) a flexible connection between the valve receiver mounting and the top of the fuel tank is permitted.

See Part 2 for further information regarding refuelling with dry-break couplings.

2.5 If dry-break fuel couplings are fitted to **a** Series Production ~~Cars~~ **Car** equipped with standard fuel tanks as supplied by the manufacturer and the tank remains unmodified in all other respects (including baffling, foam filling and modifications to the filler neck or venting stem), any consequential increase in fuel capacity will be acceptable. However, the fitment of the refuelling and vent ~~bottle~~ orifices must be as close as practical to the fuel tank; the size of the refuelling pipe from the rear of the dry-break coupling to the original filler neck of the fuel tank must be no greater than that of the OD of the exit of the dry-break bulb; and the route of the filler and vent pipes from the dry-break bulbs to the fuel tank must be as short as practical.

2.6 Any installation of LP Gas to vehicles must be in accordance with the requirements of AS 1425 (1989). Fuel tanks may be made demountable utilising appropriate self-sealing connections on fuel hoses.

2.7 The maximum capacity of fuel tanks fitted to cars of the 2nd, 3rd and 4th Categories, except as provided above, shall be:

Up to 700cc	60 litres
701-1000cc	70 litres
1001-1400cc	80 litres
1401-1600cc	90 litres
1601-2000cc	100 litres
2001-2500cc	110 litres
Over 2500cc	120 litres

2.8 ~~(i) Cars~~ **Each car** of the 3rd and 4th Categories competing in races scheduled to extend more than 30 minutes**, which is** ~~and~~ not fitted with a safety**-type** tank **approved by the FIA,** must have ~~fitted to their~~ **its** fuel tank **fitted with tank foam** ~~such anti-spray foam as specified by CAMS~~.

~~(ii) Car owners are reminded that, at some future date, such foam may be required in all cars.~~

~~(iii) The foam to be used is that produced for this purpose.~~

3. GENERAL

3.1 The requirements of this Schedule N do not apply to Club or Multi-club Level race meetings, nor to cars participating in races exclusively for **production-based cars**.

3.2 Cars first registered with CAMS after 1 January, 1977, are not permitted to have fuel tanks forming part of the stressed structure of the car.

3.3 In all circuit races, refuelling in pit lane may be undertaken only under the conditions prescribed in Part 2 hereof.

3.4 **NOTE:** Refer also to relevant technical regulations for the category/class.

Part 2 – Refuelling in Pit Lane

1. GENERAL

1.1 For any refuelling undertaken in pit lane, during any testing, practice, qualifying or race, the following procedures must be adopted, unless Supplementary Regulations provide otherwise.

1.2 Any refuelling in a pit or paddock area not utilising these procedures must be undertaken either with a vehicle totally within a pit garage or in the area of the paddock specifically designated for the purpose of refuelling; and must be completed with the engine turned off.

1.3 Under no circumstances will refuelling be permitted on the circuit.

1.4 When event regulations allow the use of any alternative refuelling equipment, those regulations shall prescribe all relevant conditions, including capacity of permitted refuelling containers and the requirements for delivery hose/s.

1.5 The regulations regarding the use of overhead rigs are compatible with FIA requirements and are thus acceptable for international events. The use of churns during competition is prohibited.

1.6 **Refuelling in pit lane is not permitted unless it is specifically authorised in the Supplementary or Further Regulations for the event.**

© Confederation of Australian Motor Sport Ltd. All use subject to Conditions of Use at *www.camsmanual.com.au*

2. SAFETY

2.1 Area: The area of the pit garage in which the fuel reservoirs are situated must be adequately ventilated and have unimpeded access from front and rear of the pit garage. A minimum quantity of extinguishment (9kg if dry powder type), which must be in either one or two extinguishers must be available for use in each pit. The area must be clean and free of potentially flammable materials eg, paper, rags, oily fabrics etc.

2.2 Pit crew: As prescribed in Race Meeting Standing Regulations, the maximum number of attendants handling refuelling-related procedures will be four, their designated tasks will be as follows:

Fire attendant;

Two hose attendants;

One rig cut off valve attendant.

All attendants will be required to be attired as per Schedule D, art. 3(a)(ii) (refer to "General Requirements for Cars and Drivers" of the CAMS Manual of Motor Sport). Balaclavas must be worn and any resultant exposed areas (eg, eyes) must be covered to minimise risk of injury from flash fire burns (eg, by goggles). The wearing of a full-face helmet is recommended in addition to the above.

Any ~~wheel attendants~~ **other pit crew members** whose tasks place them within one metre of ~~a fuel or vent~~ **the refuelling** valve on a vehicle will be required to wear clothing as listed in above for fuel attendants.

For the entire time of a pit stop during which any refuelling operation is undertaken, it will be compulsory for the fire attendant to be ready to attend to any fire which may occur. The fire attendant must stand near the car and the overhead rig, poised with the extinguisher ready to operate.

2.3 Emergency cut-off valve: It will be compulsory for any refuelling operation which incorporates an overhead rig that the rig be equipped with a ball-cock or similar fast action valve which must work on the "dead man" principle. This valve must be attached directly to the fuel reservoir. See diagram 2. The emergency cut-off valve attendant ~~may~~ **must** hold the valve open only during the refuelling operations. When pressure on the handle of the cut-off valve is released, the valve must immediately close, stopping the flow of fuel from the reservoir. The closing principal must not rely on the action of gravity alone.

2.4 Approval of installations and equipment: All installations and equipment must be specifically approved by the Chief Scrutineer of the Meeting or his nominee prior to any competition during which refuelling is permitted in pit lane. Event supplementary regulations will provide further details of times etc. for the inspection.

2.5 Earthing: During any refuelling operation, it is strongly recommended that vehicles to be electrically connected to earth, viz:

(i) Each pit is equipped with two ~~aircraft type~~ grounding connections. Vehicles must be equipped with a suitable terminal to which one of these connections may be attached.

(ii) The refuelling system (including tower, tank, hose, nozzle, valves and vent bottle) **must** be connected to one of the ~~above~~ grounding connections **detailed above** for the ~~entire~~ duration of the race.

(iii) The car ~~is~~ **must be** connected~~, at least momentarily,~~ to the other grounding connection **for the duration of all refuelling operations** ~~as soon as it stops in the pit~~.

(iv) No fuel hose connection ~~(either the fill or vent bottle)~~ **may** be made unless conditions (ii) and (iii) have been fulfilled.

2.6 Vehicle movement: The vehicle must be stationary at all times during refuelling.

3. FUEL TANKS (VEHICLES)

Refer to Schedule N (Part 1) and the relevant Technical Regulations for requirements of fuel tanks.

4. STANDARD COUPLING

Unless specifically authorised otherwise by CAMS and published in the event regulations, all refuelling operations must be carried out utilising a Siamese dry-break system. A dry-break system is deemed to consist of two separate units, the receiving unit and the probe unit together with the associated hoses, valves etc. The general design of the receiving unit and probe unit is included at diagram 1.

Diagram 1: General design of dry break coupling

Standard coupling (probe and receiver unit)

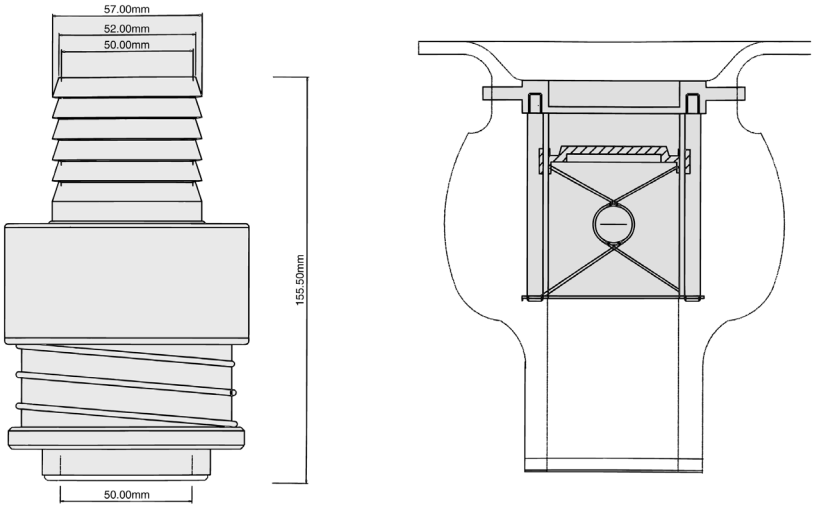

© Confederation of Australian Motor Sport Ltd. All use subject to Conditions of Use at *www.camsmanual.com.au*

A male probe unit shall be fitted to each refuelling hose.

The receiving units shall be fitted to the vehicle, under the conditions listed in the technical regulations for the relevant category.

It is permitted to only use one receiving valve to permit the entry of fuel into the tank, and one receiving valve for connection to the ~~vent bottle/~~return vent.

~~Any other design of dry break coupling, which operates on an alternative principle to that of diagram 1, must be specifically approved by CAMS and the subsequent permission, if granted, will be noted in the log book of the subject vehicle.~~

Maintenance: Competitors are advised it is extremely important to maintain all refuelling equipment in good working order. O-rings must be regularly inspected and replaced if there are any signs of expansion or damage. Springs and tracks must also be regularly inspected and kept lubricated during those times the refuelling valves are not in operation.

5. REFUELLING

Refuelling may only be undertaken by an overhead rig.

5.1 Refuelling by Overhead Rig

(i) **General:** This system envisages fuel being stored in a single rigid tank of fixed capacity (see Note), at a specific maximum height above the pit lane. Vehicles will be refuelled via a single flexible hose which in turn is fitted with a male probe unit of standard design (see article 4) with a single return vapour line to the overhead rig.

(ii) **Design requirements:** The maximum height of any part of the rig which contains fuel is two metres above the pit lane. Only non-fuel holding connections and vents are permitted above two metres.

The maximum capacity of the reservoir including the delivery hose is 220 litres which must in all circumstances allow 10% ullage (air space). See Note.

A single delivery hose, which must be of a flexible rubber or a fuel resistant reinforced plastic material must be connected to the "dead man" valve.

The flexible part of the hose must be at least 2.5m in length and of an ID no greater than 50mm **(2")**.

The flexible hose must be connected to the male probe. A solid connecting sleeve (maximum length 300mm) is permitted between the hose and the probe, to assist with ease of handling.

~~The head of the male probe and all other metal parts of the system must be electrically connected to ground via a lead clipped to the delivery hose.~~

All parts of the refuelling system, including the male probe, the flexible hose, any connection sleeve, the cut-off valve and the reservoir must be electrically continuous and efficiently grounded.

The reservoir must be vented via an explosion safe shielded vent.

A filling orifice (maximum dimension 50mm) may be fitted to the main reservoir. Any refilling operations to the main reservoir must be carried out bearing in mind civil Occupational Health and Safety regulations.

No artificial pressurisation of the reservoir is permitted.

The vent must be open to the atmosphere and only atmospheric pressure may be exerted on the fuel in the main reservoir.

Any device which changes the ambient temperature of the fuel is prohibited.

The rig shall not be moved once filled and must be completely drained before moving.

The fire attendant must be "ready for action" during any refilling operations.

(iii) **Use:** The rig, including the reservoir, return and delivery hose, must either remain behind the pit wall or be contained entirely within the pit garage. The delivery hose may only be moved into pit lane from the pit garage a maximum of three minutes prior to any pit stop. While in pit lane, the delivery hose must at all times be held by the relevant attendant.

~~**Note: Overhead rigs identified as being in use prior to 1 January, 2001, shall remain acceptable until further advised.**~~

6. VENTING DURING REFUELLING OPERATIONS

In all refuelling operations, the fuel tank/s of the vehicle must be vented through a standard coupling (see article 4), by a return vent integrated with the filler coupling as a Siamese unit.

6.1 Return Vents

(i) **General:** The return vent allows a fuel tank of a car to be vented to the ullage space in the reservoir of the overhead refuelling rig (see diagram 2).

(ii) **Design requirements:** Maximum internal diameter at vent hose is 50mm **(2")**.

The vent hose must only return to the reservoir tank.

The reservoir of the main tank must be vented externally to any pit garage.

~~(iii) "Siamese" couplings, the equipment must be manufactured in a manner which allows the vent coupling to engage prior to the refuelling coupling and likewise the vent coupling must disengage after the refuelling coupling.~~

© Confederation of Australian Motor Sport Ltd. All use subject to Conditions of Use at *www.camsmanual.com.au*

Diagram 2: Overhead rig with fuel hose return vent

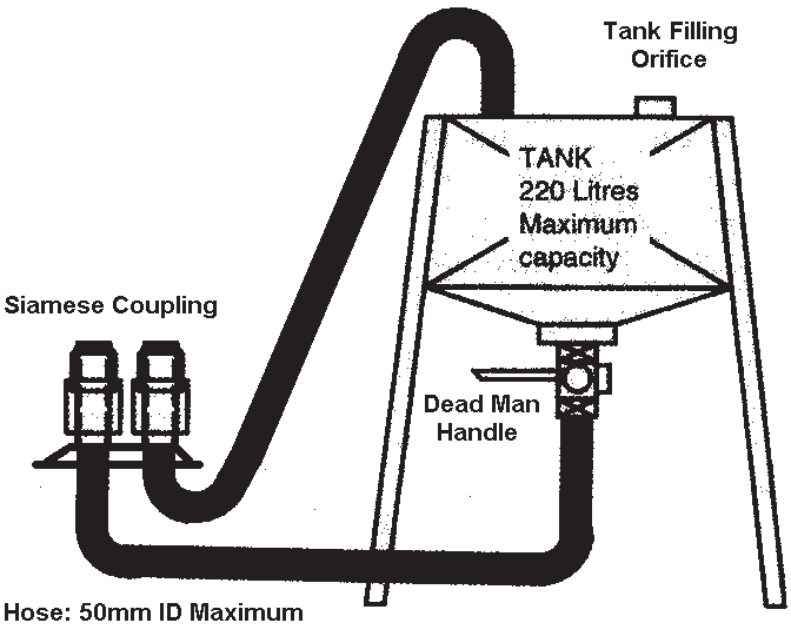

Don't sit and wait ...

Get your message out to the right people!

Promotion in the annual CAMS Manual of Motor Sport, the CAMS Online Manual of Motor Sport and the Goods & Services Directory will give you access to the most serious motor sport participants – those who hold a CAMS licence … from club level right through to international competitors.

CAMS Magazine is published three times a year and reaches about 30,000 members of approximately 400 CAMS-affiliated car clubs. It is also sent to federal and state government departments, many commercial organisations, the motor industry, the motoring media and overseas national motor sport bodies.

It brings to CAMS members the official motor sport news from CAMS, including updates on the instigation of policy, rules, legislation or any matter which may directly or indirectly impact on the conduct of motor sport at any level.

Don't leave it until next year. Act now to get your message to this critical audience through these vital publications. Call:

JMC Ads

Tel: (03) 5862 3090

Mobile: 0403 226 770

e-mail: jmcads@westnet.com.au

© Confederation of Australian Motor Sport Ltd. All use subject to Conditions of Use at *www.camsmanual.com.au*