SPECIFICATIONS OF AUTOMOBILES

All vehicles in races and other speed events must comply with the General Requirements of Automobiles (see "General Requirements for Cars and Drivers" in the CAMS Manual of Motor Sport).

2nd Category – Sports Cars

The 2nd Category provides for two-seater sports racing cars and other highly-modified cars:

Group 2A	Sports Cars, open and closed
Group 2B	Marque Sports Cars
Group 2C	Clubman Sports Cars
Group 2F	Production Sports Cars

Cars must comply with the General Requirements for Automobiles, including Schedules A, B and, in races, C (refer to "General Requirements for Cars and Drivers" in the CAMS Manual of Motor Sport) as well as the Specific Requirements for each group.

Group 2F – Production Sports Cars

1. DEFINITIONS

1.1 **Production Sports Car:** A race vehicle derived from a registrable production sports car, with limited modifications to improve performance and reliability in speed events and races.

1.2 **Eligibility:** Cars in this Group must be Class I vehicles from the Sports Car Recognition list approved by CAMS. See Group 2B regulations for acceptance criteria.

1.3 **Elastomeric bushings:** Suspension components utilising an elastomer (eg, rubber, urethane) to permit freedom of movement in three axes at suspension pivot points. Where the bush incorporates an outer metal shell and/or central crush tube, they shall be regarded as part of the bushing. Where the bushing is integrated with the arm or other secondary component, only the elastomer material shall be regarded as the bushing for replacement purposes.

1.4 **Decorative strips:** These are defined as any parts following the external contour of the bodywork and less than 100mm high; the function of which is to prevent minor body damage or is decorative. Badges describing the vehicle manufacturer and/or model are considered to be within this definition.

1.5 **Materials:** Components which are for decorative purposes only and which are in nature not structural/load-bearing (eg, instrument surrounds, facia panel decorations), may be formed from carbon fibre or carbon/Kevlar matting. The use of carbon/carbon Kevlar composites, or titanium alloys, in any non-standard structural or mechanical component, unless specifically provided for by an article in the present regulations, is prohibited.

1.6 **Free:** A component, deemed to be free under these regulations may, where fitted to the vehicle as standard, be removed or replaced. Where the removed component is replaced, the replacement is not restricted in design or material (unless otherwise specified) providing it performs only the same function. No modification may be made to surrounding components or bodywork to which the replacement is fitted, unless otherwise permitted. Where freedom is granted for the fitment of any component, such freedom is restricted to that component and such modifications as are allowed in Article 3.10. For the purpose of this article, a component shall be deemed to include all other components with which it is integrated, or to which it is attached by means the manufacturer intended to be permanent. Where a system is deemed as free, all components solely associated with that system are regarded as free, as per above.

2. REGULATIONS

2.1 **Role of CAMS:** The following technical regulations for 2F Production Sports Cars are issued by CAMS and must be read in conjunction with the relevant Schedules of "General Requirements for Cars and Drivers".

2.2 **Publication date for amendments:** Each year in January at the latest, CAMS will publish all changes made to these regulations in the CAMS Manual of Motor Sport. Changes made for safety may come into force without notice. CAMS reserve the right to alter regulations at its discretion.

2.3 **Measurement:** All measurements relevant to the bodywork and suspension must be made while the car is stationary on a flat horizontal surface, without driver and with the steering centred.

2.4 **Log book/Eligibility:** The Competitor is responsible for furnishing any documentation to prove the eligibility of any part used or modification performed otherwise outside of these regulations.

© Confederation of Australian Motor Sport Ltd. All use subject to Conditions of Use at *www.camsmanual.com.au*

2.5 Standard equipment: Where an article in the present regulations refers to standard equipment, it refers to the specifications of or parts fitted to the particular model or marketing designation of the vehicle as supplied by the manufacturer. Parts available as options, whether at additional cost or not, are not eligible unless otherwise specified. The model represented shall be as specified on the entry form.

2.6 Modifications: Any aspect relating to the construction, modification and/or preparation of the vehicle, which is not specifically authorised in the present regulations, is forbidden. The only work which may be otherwise performed on the car is that necessary for normal servicing or the replacement of parts damaged by wear or accident, or that required under Schedules A, B and C (refer "General Requirements for Cars and Drivers"). Unless otherwise specified, a part replaced through damage or wear must only be replaced by an original part identical to the previously undamaged one.

3. BODYWORK AND DIMENSIONS

3.1 Strengthening: It is permitted to seam weld the bodyshell. Metal to a thickness of up to 5mm may be added to fully sprung components to a distance of 75mm from the edge of each suspension pivot point aperture. Such metal must follow the contour of the original metal at all times. It is not permitted to add or incorporate any other components which contribute to the rigidity of the bodyshell, other than the roll over protection structure as described in Article 13.1, and a strut tower brace as described in Article 8.7.

3.2 Aerodynamic devices:

(i) **General:** Any specific part of the car influencing its aerodynamic performance fitted as specified in this article:

- May not be used for mounting any additional devices or performing any alternative functions other than the channelling of air for cooling purposes.
- Must be rigidly secured to the entirely sprung part of the car (rigidly secured means not having any degree of freedom).
- Must remain in its entirety immobile in relation to the remaining sprung parts of the car. Where an original aerodynamic device incorporates a moveable component, such adjusting mechanism must be rendered inoperative and the component fixed into position.

(ii) **Front aerodynamic devices:** It is permitted to fit an airdam to the front of the car, subject to the following restrictions:

- It is completely contained within the vertical projection of the original vehicle (see diagram 1).
- No part below a horizontal plane passing through the centre of the wheel hubs at their extremities may extend further rearward than the wheelarch opening at the forward point where it intersects this plane.
- No part above a horizontal plane passing through the centre of the wheel hubs shall extend into the wheelarch opening
- No undertray is permitted to the airdam.

(iii) **Rear aerodynamic devices:** It is permitted to fit a rear deck spoiler or wing provided it was supplied as a factory option for that particular model of vehicle or another model of the same family of vehicle. It is permissible to replace one rear aerodynamic device with another complying with the present article.

Diagram 1

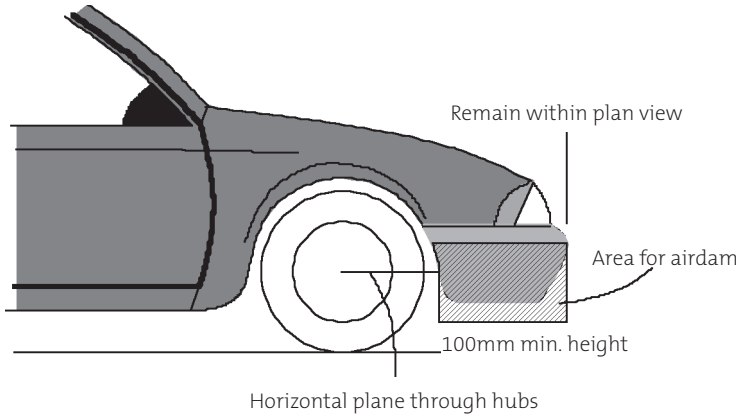

3.3 Cockpit covering, open vehicles: It is permitted for the cockpit opening of open vehicles to be partially covered by a tonneau cover, able to be removed without the aid of tools. Where a manufacturer provides a hard top as a factory option, this may be installed in compliance with the manufacturer's instructions; a vehicle so equipped remains considered as an open vehicle.

3.4 Vehicle embellishments: External decorative strips and mud flaps may be removed. Sump guards/splash guards may be removed or added. If sump/splash guards are added and they are in contact with the external airstream, they must be perforated with 50mm diameter holes with centres of maximum 150mm apart. No part of any additional or replacement sump/splash guard may extend to the rear of the rearmost point of the engine block as installed in the vehicle.

3.5 Registration plates: Registration plates, registration plate mountings and associated lighting components may be removed.

3.6 Sound deadener: Sound deadener (bitumen and fabric types etc) may be removed from the body shell and hung panels.

3.7 Windscreen and mirrors: Unless fitted as standard with a non-glass windscreen, the windscreen must be of

© Confederation of Australian Motor Sport Ltd. All use subject to Conditions of Use at *www.camsmanual.com.au*

laminated glass, and may incorporate defrosting equipment. Where the windscreen is demountable, it may be removed. External rear view mirrors may be replaced or deleted, provided that Schedule C (refer "General Requirements for Cars and Drivers") is respected at all times.

3.8 Bonnet catches: The original bonnet fasteners and release mechanisms may be removed. At least two separate fasteners for the bonnet must be fitted.

3.9 Window regulators: Where a car is fitted with electric window regulators, it is permitted to replace them with manual window regulators and, where necessary, doortrims from the same family of vehicle. Electric door lock actuators may be removed or rendered inoperative.

3.10 General: Holes may be drilled for fasteners (eg, bolts, screws, rivets etc). It is permitted to cut holes of the minimum necessary dimension for the passage of wiring, and fuel, brake and oil lines/hoses.

3.11 Timing device: It is permitted to remove the minimum amount of metal necessary to facilitate fitment of a timing transponder to the upper surface of the cockpit floor.

3.12 Racing weight: Vehicles shall be required to comply with the racing weights as may be set out on the Recognition list.

4. ENGINE

4.1 General

(i) **Reciprocating engines:** The cylinder block may be bored to a maximum 1.5mm oversize. The cylinder may be modified by the removal of metal save that the original components must always be able to be identified. The internal rotating and reciprocating components, including the camshaft/s are free, but the original stroke must be respected.

(ii) **Rotary engines:** The rotors, tip seals and crankshaft are free. The ports in the end and intermediate plates may be modified by the removal of metal, including "bridge" porting, but the original O-ring seals must remain unmodified and in their original location.

4.2 Fuel system: The carburettor, where fitted, may be replaced by one of free design. On fuel injected vehicles, the fuel injectors, engine control unit and associated wiring harness are free. Air cleaners and their housings are free. The inlet manifold may be modified by the removal of metal provided the original component is able to be identified.

4.3 Supercharging: Where supercharging is recognised as standard production for the model, the boost pressure may be altered. The drive pulleys of a mechanical supercharger may be modified to alter drive speed. A restricting orifice must be fitted to the inlet tract prior to the air entering the supercharging device/s so that all air used in the combustion process of the engine must pass through the orifice/s. The maximum internal diameter of the air intake into the compressor is 34mm for a single supercharger or 24mm for each of two superchargers and must be maintained for a distance of at least 3mm. The maximum diameter of the restricting orifice must be complied with at all operating temperatures. For vehicles utilising a turbine type compressor, the restrictor must be fitted as per drawing 254-4 in the CAMS Manual. For other types of superchargers, the upstream extremity of each restriction must be situated a maximum of 50mm from the intake port of the compressor housing.

4.4 Oil system: Dry sump systems are permitted. The oil tank must be situated in the luggage compartment where possible or otherwise fully shielded from the cockpit. Oil lines may pass through the cockpit provided they are insulated and there are no joins save those at the front or rear bulkheads.

4.5 Exhaust: For turbosupercharged vehicles the exhaust manifold and turbosupercharger must remain as standard. The complete exhaust system is free downstream of the exit from the turbo housing. For other engine configurations, the exhaust is free from the cylinder head exhaust port. The original exhaust mounting brackets may be removed and additional brackets may be fitted, provided that their sole function is the location of the exhaust.

4.6 Engine mounts: The elastomeric components of the engine mounts may be exchanged for a harder grade of elastomer.

4.7 Flywheel and crankshaft damper: The flywheel may be replaced by a unit of free design, and manufactured from steel. The starter ring gear must be the original component secured to the flywheel as per the original. The torsional damper is free.

5. PIPING AND FUEL TANKS

5.1 Fuel tanks:

(i) The fuel tank may be modified or replaced by one of free but safe design; an FIA-approved (FT3 or greater specification) bladder tank is recommended.

(ii) It must be mounted in the same general location, where possible utilising the existing mounting facilities, or in the luggage compartment.

(iii) For all vehicles, a flame and liquid-proof bulkhead must be fitted between the driver and all internally mounted fuel system components save for fuel lines as per 5.3 below.

5.2 Tank fillers:

(i) Dry Break fittings are permitted, and must be fitted in compliance with Schedule N (refer "General Requirements for Cars and Drivers"). Tank fillers must not protrude beyond the bodywork and must be effected in such a way that no fuel spilt in the filling process will leak into the interior compartments of the car.

(ii) Where the existing fuel filler position is retained, the standard filler orifice may be modified to accept a replacement cap of free design.

© Confederation of Australian Motor Sport Ltd. All use subject to Conditions of Use at *www.camsmanual.com.au*

(iii) Alternatively the filler may be relocated into the luggage compartment; an opening of a maximum 250mm x 250mm may be made in the floor of the luggage compartment for access to underfloor tanks.

Note: In all cases, tank fillers must be designed to ensure an efficient closing action which reduces the risk of accidental opening following a crash impact.

5.3 Fuel pumps/filter: Fuel pumps, fittings, and filters are free. Fuel lines must be made from a material suitable for the purpose. Where the fuel lines pass through the cockpit, there must be no connections within the cockpit save at the front and rear bulkheads.

6. COOLING SYSTEM

6.1 Radiator, cowls and fans: The radiator is free providing that the only body modification required for fitment is the drilling of holes for mounting purposes. Radiator cowls/shrouds on the rear of the radiator for the purpose of sealing a fan may be removed. Radiator cowls in front of the radiator must be retained in their entirety. It is permitted to add additional shrouds or ducting. Engine cooling fans are free.

6.2 Oil coolers: Engine oil coolers are free subject to Article 3.2.

6.3 Inlet charge air cooling: Where supercharging is used, the pipes between the intercooler (if fitted), manifold and the supercharging device are free but their only purpose must be to channel air.

7. TRANSMISSION TO THE WHEELS

7.1 Final drive: Any alternative final drive ratio offered by the manufacturer for the model may be used.

7.2 Cooling: An additional lubricant cooling device, including a fan is permitted. The circulating pump, radiator, and air intake may not be located in the cockpit.

7.3 Clutch: The pressure plate and clutch plate, is free.

7.4 Tailshaft/driveshafts/axles: The tailshaft/driveshafts/axles and associated universal or CV-joints are free.

8. SUSPENSION AND STEERING

8.1 Springs: Springs are free provided that the type and location are unchanged (by "type" is meant coil, torsion bar, leaf etc.)

8.2 Bump stops: Bump stops, being the components designed to ultimately limit the suspension travel, are free and may be repositioned.

8.3 Bushes: Elastomeric bushes used at suspension pivot points may be replaced by mechanically identical elastomeric bushings (eg, urethane may replace rubber).

8.4 Suspension dampers: The make and size of suspension dampers are free. The number of dampers and pivot point locations may not be altered.

8.5 Wheel bearings, hubs and trunnions: trunnions are free. Bearings may be replaced by mechanically identical components. On vehicles with live rear axle assemblies, semi-floating axles may be replaced by full floating axles. Rear axle housings may be modified to facilitate the fitment of suitable spindles, associated hubs and bearings.

8.6 MacPherson strut top mounts: MacPherson strut top mounts are free providing that they utilise the standard bodyshell mounting facilities.

8.7 Strut tower brace: A brace of free design may be fitted between the front suspension towers providing it only links the towers and connects within 150mm of the suspension pivot points

8.8 Anti-sway bars: Original anti-sway bars may be replaced by others mounted in the same mounting location. Where no bar is fitted originally it is permitted to add one, including mounting points. Linkages between the anti sway bar and suspension components or bodyshell are free.

8.9 Ride height adjustment: Adjustable spring platforms, rear leaf spring shackles, spacers located directly at either end or between coil springs, lowering blocks of solid/rigid material and torsion bar ride height adjusters are free.

8.10 Wheel track: The front and rear track dimensions are free save that the upper part of the tyre, down to the flange over the wheel hub centre must be within the perimeter of the vehicle when viewed vertically from above (see diagram 2). Track extenders or spacers may be used provided that they are fixed to the hub.

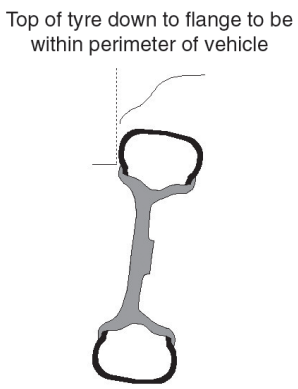

Diagram 2

© Confederation of Australian Motor Sport Ltd. All use subject to Conditions of Use at *www.camsmanual.com.au*

8.11 Additional linkages: Where a live rear axle is located by leaf springs (Hotchkiss suspension), it is permitted to fit a Panhard rod or watts link and associated brackets to the vehicle. Such brackets must only involve the addition of metal.

8.12 Ride height: In as raced condition, all fully sprung parts of the car, with the exception of the entire exhaust system, must be at least 100mm above the ground when measured on a flat level surface.

8.13 Wheel alignment facilities: The wheel alignment settings are free. It is permitted to relocate all pivot points radially by up to 20mm within the confines of the existing mounting brackets or body panels. No metal may be removed save that directly associated with the actual pivot point relocation. For vehicles with a live rear axle, camber or toe may vary by no more than 1/2° from standard. Tie rod ends are free.

9. BRAKES

9.1 Master cylinders: The brake master cylinder assembly (including power boosters and associated pushrods) may be replaced provided that the replacement master cylinder/s and power booster or other such system utilises the existing mounting facilities. A dual master cylinder system with cockpit adjustable brake bias is permitted. Brake proportioning valves may be added or interchanged freely. Anti-lock brake systems may be removed or deactivated.

9.2 Brake rotors: The standard brake rotors may be replaced. Such replacements may be of free design providing that they are made from a ferrous material. Discs may be interchanged with drums. Disc mounting hats are free subject to their being made from aluminium alloy or ferrous material.

9.3 Brake callipers: Brake callipers and pads are free, subject to the main housing being made of a ferrous material or an aluminium alloy and utilising no more than four pistons. Titanium pistons are permitted. Suspension components may be modified to permit fitment of replacement callipers.

9.4 Handbrake: Handbrakes are free.

9.5 Brake cooling: Protection shields/stone guards on unsprung components may be added or removed. It is permitted to fit ducting for the passage of air to the brakes provided that it remains within the perimeter of the coachwork when viewed from above and that no bodywork alterations are required.

10. WHEELS AND TYRES

10.1 Wheels: Wheels may be replaced by others of free design, Where the wheels supplied by the car manufacturer are not retained, the maximum rim width and diameter of the replacement wheels, based on the vehicle weight is given in the table below:

Racing Weight*	Maximum Rim Width	Maximum Diameter
up to 930 kg	7”	16”
931 - 1280 kg	8”	17”
above 1280 kg	9”	18”

The spare wheel, jack and any associated brackets may be removed.

** See Definitions - Technical (refer “General Requirements for Cars and Drivers”).*

10.2 Tyres: At the commencement of any race or practise session all tyres must:

(i) Be of a type included on the current CAMS Production Car Tyre list.

(ii) Have at least a minimum tread depth. The definitive method of determining minimum tread depth shall be the tread wear indicators provided by the tyre manufacturer. At no time prior to practise or racing may any tread wear indicator be exposed or in the case where the indicator is a dimple in the tyre, worn below such indicator. This does not apply to the shoulder of the tyre.

(iii) Be fitted on to a rim in compliance with Schedule E (refer “General Requirements for Cars and Drivers”).

11. ELECTRICAL

11.1 Electrical system: The wiring and electrical connectors, switches, fuses and circuit breakers, starting, ignition and generating systems are free. The starting, lighting and turn signalling apparatus must be in working order at the start of each competition. All globes must at least meet the original equipment specification.

11.2 Battery: The battery and its location are free but it must be safely and securely mounted. It must be adequately covered so as to prevent short circuits and leakage, in any position. Where the battery is relocated, the original battery mountings may be removed.

11.3 Windscreen wipers: The windscreen wiper mechanism may be removed where the windscreen is removed. The wiper blade tension springs may be modified and wind deflectors added. Headlight and rear window wipers and washers may be removed. The windscreen washer bottle, pump and hoses and any mounting bracket are free. Windscreen wipers must rest in the same location as on a standard car of that make and model.

12. COCKPIT/DRIVER'S COMPARTMENT

12.1 Steering wheel: The steering wheel may be replaced by one that is of at least 300mm diameter. It is permitted to add a steering wheel boss, possibly incorporating a quick release mechanism, to enable the fitment of a permissible steering wheel. The steering column may be repositioned by the addition of spacers/ longer bolts at the existing rear mounting points provided no other modifications are required.

12.2 Controls: All driving controls must retain the role laid down for them by the manufacturer. Footrests and

© Confederation of Australian Motor Sport Ltd. All use subject to Conditions of Use at *www.camsmanual.com.au*

heat protection panels may be added to the driver's footwell cavity. Pedals may be modified, but not the mounting points.

12.3 Instruments: Instruments are free, but the original dash must remain. Any holes in the dash resulting from the removal of instruments must be neatly closed by the addition of a closing panel. Where possible, all replacement instruments must be mounted in the dash where the original instruments were situated, but may otherwise be mounted in a panel in front of the original dash.

12.4 Carpet and interior trim: Roof lining and interior trim down to the lower edge of the windows in closed cars may be removed. Consoles on the transmission tunnel and which are not integrated with the dash assembly may be removed. Floor carpet and associated "underfelt" may be removed. Flat panels trimmed to match the original items may replace moulded door trims for the purpose of fitting a ROPS.

12.5 Seats: The driver's and/or front passenger's seats may be replaced with other seats in compliance with Schedule C (refer "General Requirements for Cars and Drivers"). Original seat mountings may be removed or replaced and/or other mountings added provided that they extend no further than 50mm from the plan view of the seat. The rear seats if fitted, and associated seat belts are free. The use of carbon fibre composites in replacement seats is permitted.

12.6 Removable rear window shelf: The removable rear window shelf in two volume cars may be removed together with its supports, or held down by additional fasteners.

12.7 Air conditioner: All components solely associated with a refrigerated air conditioning system may be disconnected or removed.

12.8 Accessories: The radio, aerial, speakers and speaker mounts may be removed. Fog/driving lights, which are separate from the main lighting system, may be removed, as may internal cockpit lights. Accessories, which do not increase performance (eg, additional lamps, mirrors, etc), may be added.

13. SAFETY STRUCTURES

13.1 Roll over protection structures: Roll over protection structures must comply with Schedule J (refer "General Requirements for Cars and Drivers") save that in closed cars a ROPS complying with the prescriptions of drawing 259-3 will be acceptable. Open cars must comply with at least the prescriptions of drawing 259-1. Front suspension braces may be fitted as per diagram 253-11. It is permitted to attach parts of the safety cage to the interior of the passenger compartment, either by welding or bolting. The removal of the minimum amount of upholstery to assist the fitment of the safety cage members is permitted. Where moulded door trims interfere with anti intrusion bars, they may be replaced with flat items provided the replacements are trimmed to match the original items.

13.2 Safety harness: Where the vehicle is not registered for road use, the original driver's seat belt must be replaced by a safety harness, complying with Schedule I (refer "General Requirements for Cars and Drivers"), with at least four belts in contact with the driver in closed cars, or five belts in an open car.

14. FUEL

14.1 Fuel: Only fuel as defined by CAMS in Schedule G (refer "General Requirements for Cars and Drivers"), may be used. Vehicles of a model that was built after 1 January 1986 must use only unleaded fuel.

14.2 Air: Only air may be mixed with the fuel as an oxidant.

© Confederation of Australian Motor Sport Ltd. All use subject to Conditions of Use at *www.camsmanual.com.au*