RALLY / ROAD

Tarmac Rally Technical Regulations – Classic

Note: This is a 'live' document and progressive refinements will be made.

Date of last update: I July 2008

These regulations are the property of CAMS and are copyright. They may not be reproduced without the permission of CAMS.

Throughout this document, any reference to CAMS shall mean the Confederation of Australian Motor Sport Ltd and any reference to FIA shall mean the Federation Internationale de l'Automobile.

APPLICATION OF THESE REGULATIONS

These regulations are based on the principle that modifications to the automobile or its components other than those specified below are forbidden.

The Classic and Modern regulations are designed to be read independently.

In each case, the regulations commence with matters which are generic in nature and are applicable to all automobiles of that age categories, regardless of their modification level. These deal largely with eligibility and/or safety issues rather than specific technical issues.

The regulations then move on to describe the three levels of modification that may be permitted.

Classic
Pre-1982

General Requirements

I. PREAMBLE

These regulations are based on the principle that modifications to the automobile or its components other than those specified below are forbidden.

Each automobile shall be manufactured prior to 1982, or be a model/specification which matches that of an automobile manufactured prior to 1982.

All automobiles must comply with these regulations, the relevant provisions of "General Requirements for Cars and Drivers" and Schedule R (save that mudflaps are not mandatory) in the CAMS Manual of Motor Sport.

Each automobile shall be divided into one of three modification groups: C1, C2 and C3. The specific requirements for these three modification groups follow.

Each automobile shall have an 'age' category determined by the date of manufacture except when the unchanged model carries on to the next age category, in which case an automobile can claim entry to the previous category.

Cut-off dates in accordance with the FIA Appendix K age periods are as follows:

Category 1	Period A	up to 1904
	Period B	1905 - 1918
	Period C	1919 - 1930
	Period D	1931 - 1946*
Category 2	Period E	1947 - 1961
Category 3	Period F	1962 - 1965
Category 4	Period G	1966 - 1971
Category 5	Period H	1972 - 1976
Category 6	Period I	1977 - 1981

*Automobiles with pre-war technology built up to 31 December 1947 may be included in Period D, subject to acceptance by the organisers and authorisation by the Technical Commissioner.

For the purposes of awards, organisers may combine Periods under conditions outlined in the Supplementary Regulations.

These regulations do not supersede any civil requirements/regulations, and compliance with any such

© Confederation of Australian Motor Sport Ltd. All use subject to Conditions of Use at *www.camsmanual.com.au*

provisions is the responsibility of the competitor.

- In cases where production of a model commenced before the cut-off date and continued after that date, automobiles actually manufactured after this date are considered to be eligible provided they were produced to exactly the same specification as the automobiles built prior to the date. This provision known as "model run-on" terminates upon a change in automobile specification having being implemented by the automobile manufacturer

In all cases, the onus of proof in relation to eligibility matters lies with the competitor.

2. IMPLEMENTATION

From 1 January 2008 these regulations will be the sole regulations for tarmac rallies.

3. ELIGIBLE AUTOMOBILES

- Automobiles homologated under FIA Appendix K, or automobiles not homologated but otherwise complying with the period provisions of FIA Appendix K, and which are also:
- Sports Cars (open or closed automobiles with no more than two seats); or
- GT Cars (open or closed automobiles with no more than one door on each side and no more than four seats); or
- Models which have a competition history, as permitted by CAMS; or
- Models without a specific competition history but which are considered by CAMS to have a significant place in the history of the sporting automobile and to be in accordance with the spirit of such events; or
- Period reproductions as permitted by CAMS;
- Automobiles previously utilised in the London-Sydney event which comply with the eligibility regulations pertaining to that event. Evidence to the satisfaction of the Chief Scrutineer or the Tarmac Rally Technical Commissioner of that car having participated must be produced by the competitor. Such cars will be eligible only for C3.
- General Requirements of automobiles to be eligible:
- Each automobile must have at least two seats.
- Have been capable of achieving road registration when first released.
- Options:

The onus is at all times on the competitor to provide proof that each component is in fact a genuine option, and if this cannot be provided the Technical Commissioner or Chief Scrutineer may either request that the component be removed (prior to the start of the event) or otherwise instigate a charge.

Options/accessories/parts (henceforth described as the 'option') may be permitted in certain areas, subject to the following:

3.1 General Requirements:

(i) To be acceptable in competition, each option shall comply with at least one of the following requirements:

(a) It shall be listed by the manufacturer as a "production option", ie, an optional item or specification listed on the automobile build sheet and fitted at the time of build of the automobile. (For some automobiles the options with which it was built are listed on the automobile ID plate.)

OR

(b) It shall be an option listed and authorised by the manufacturer in official sales literature and to which a manufacturer's warranty applies and which may be fitted at an authorised dealership.

OR

(c) The option shall have been proven to have been supplied by the Manufacturer in more than the minimum production quantities for eligibility, in automobiles registered for road use.

(ii) In addition to 3.1(i) above, an option shall comply with ALL of the following requirements:

(a) Each option must comply with the regulations of the relevant road authority and be ADR compliant.

(b) Each option included on the automobile must have been available during the model run of the automobile.

(c) Where a recognition document has been issued for a particular automobile, each option shall be specified in the recognition document.

(d) Each option must be permitted under the provisions outlined in 3.2 below.

3.2 Specific Requirements:

Options will only be permitted in the following areas and then *only when in compliance with the requirements set out in 3.1:*

(i) All areas where the Tarmac Rally Technical Regulations provide freedom of modification.

(ii) Suspension:

(a) Elastomeric bushes – alternate 'option' bushes, also elastomeric in nature but which may be of different hardness.

(b) Sway bars – one alternate size of sway of the same design, material, and which are interchangeable with the original.

(iii) **Aerodynamic options:**

Each aerodynamic 'add on' device may be considered as an option, provided it complies with the following requirements:

(a) The rear aerodynamic device of an automobile which is of sedan type (ie, three volume) configuration shall

© Confederation of Australian Motor Sport Ltd. All use subject to Conditions of Use at *www.camsmanual.com.au*

comply with the dimensions outlined in the diagram below. The rear aerodynamic device of an automobile which is of hatchback type (ie, two volume) configuration shall respect the same dimensions in 8.2.5 (iii) and (iv) below, but at its top most point shall be not more than 25mm above the roof.

(b) At its lateral extremities, the rear aerodynamic device must join the bodywork, and it must be entirely contained within the frontal projection of the automobile without its rear-view mirrors.

(c) The material of construction for the rear aerodynamic device is free save that no carbon fibre, Kevlar or titanium may be used.

Diagram 1

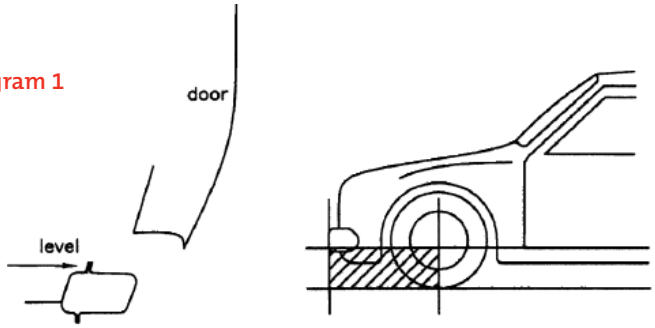

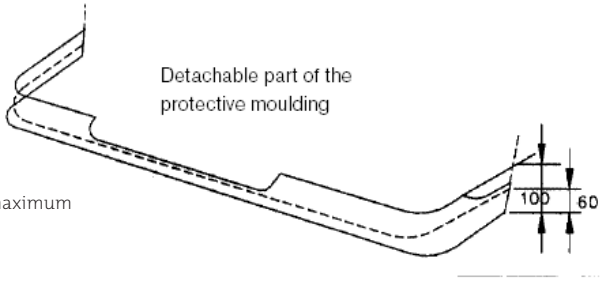

Diagram 2
All dimensions are maximum

Diagram 3 - 2WD Rear Aerodynamic Device
All dimensions are maximum

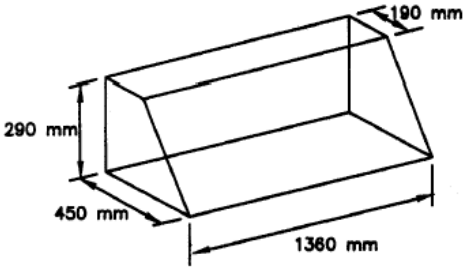

Diagram 4 - 4WD Rear Aerodynamic Device
All dimensions are maximum

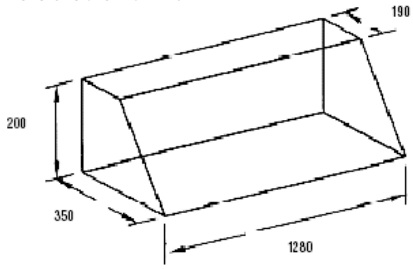

(iv) **Other body options:**
'Side skirts' fitted between the front and rear wheel arch. The side profile shall be no more than 100mm high, and which are entirely contained within the frontal projection of the standard bodywork without its rear-view mirrors.

(v) **Interior:**
Additional gauges, gauge pods, consoles.

3.3 Engine Options
No option is permitted that is related to the engine or an engine accessory.

... continued

© Confederation of Australian Motor Sport Ltd. All use subject to Conditions of Use at *www.camsmanual.com.au*

4. AGE & CAPACITY CLASSES

4.1 Category 1 (1900 - 1946)

1A	0 to 1500cc
1B	1501cc to 3000cc
1C	3001cc to 4000cc
1D	4001cc to 5000cc
1E	over 5000cc

4.2 Category 2 (1947 - 1961)

2A	up to 1150cc
2B	1151cc to 1300cc
2C	1301cc to 1600cc
2D	1601cc to 2000cc
2E	2001cc to 3000cc
2F	over 3000cc

4.3 Category 3 (1962 - 1965)

3A	up to 1150cc
3B	1151cc to 1300cc
3C	1301cc to 1600cc
3D	1601cc to 2000cc
3E	2001cc to 3000cc
3F	over 3000cc

4.4 Category 4 (1966-1971)

4A	up to 1600cc
4B	1601cc to 2000cc
4C	2001cc to 2500cc
4D	2501cc to 3000cc
4E	3001cc to 3500cc
4F	3501cc to 4000cc
4G	4001cc to 4500cc
4H	over 4500cc

4.5 Category 5 (1972-1976)

5A	up to 1600cc
5B	1601cc to 2000cc
5C	2001cc to 2500cc
5D	2501cc to 3000cc
5E	3001cc to 3500cc
5F	3501cc to 4000cc
5G	4001cc to 4500cc
5H	over 4500cc

4.6 Category 6 (1977-1981)

6A	up to 2000cc
6B	2001cc to 2500cc
6C	2501cc to 3000cc
6D	3001cc to 3500cc
6E	3501cc to 4000cc
6F	4001cc to 4500cc
6G	over 4500cc

The organisers may choose to select or combine categories and/or classes for their event, which shall be advised in the Supplementary Regulations, or specify a minimum number of entries in a category or class, which, if not reached, will result in that category being amalgamated with the next higher a) capacity, or b) modification level. If no such category exists, the automobile will be eligible only for outright awards.

© Confederation of Australian Motor Sport Ltd. All use subject to Conditions of Use at *www.camsmanual.com.au*

5. DEFINITIONS

5.1 Ancillary items

Ancillary items are deemed to be as follows; starter motor, alternator, power steering pump, air conditioning compressor, generator and emissions air pump.

5.2 Automobile

Refer CAMS National Competition Rules in the CAMS Manual of Motor Sport.

5.3 Elastomer

An elastic solid composed of primarily hydrocarbon material with widely spaced cross linking bonds. Such material shall have a maximum Shore (A) Hardness of 100, and a maximum tensile strength of 60 MPa.

5.4 Elastomeric bushing

A flexible coupling between two rigid structures that provides limited radial and axial freedom of movement. Bushings with less than 4.0mm of elastomer between the rigid structures shall not be regarded as elastomeric.

5.5 Manufacturer

A manufacturer is deemed to be a company which is the producer of complete automobiles in a quantity deemed sufficient by CAMS. Proof may be the recognition of such by a recognised civil registration authority – eg, the automobile is registered or permitted in the name of the manufacturer by a registration authority.

5.6 Mechanically Identical

A component will be considered as being "mechanically identical" if it performs exclusively the original function/s in the same manner as foreseen by the manufacturer and it permits the attachment of any secondary components in the original manner and without modification of those components. In addition, for the purposes of these regulations, the material and dimensions of the component must be equivalent to the original.

5.7 Modern replica

An automobile which has been constructed as a replica of a period automobile, but which employs any modern mechanical components and/or materials.

5.8 Muffler

A muffler is a section of the exhaust system that must reduce the exhaust noise level of the automobile. The cross section of the muffler must be at least 170% of that of the inlet pipe and contain sound deadening material. The sound deadening material may take the form of a 45% perforated tube or synthetic packing.

5.9 Original

A component which either the one originally fitted or a component which is an identical reproduction of that originally fitted, and is indistinguishable from it in all respects.

5.10 Period

In these regulations, the word 'period' shall refer to the Appendix K age periods as defined in "General".

5.11 Period reproduction

Category 1

Refer CAMS 5th Category, Groups J/K/L.

Category 2 onward

An automobile constructed at any time in the likeness of another automobile using major components (ie, engine, chassis, transmission, axles and suspension) of that or a similar automobile from the period being represented. The automobile must replicate the period specification and appearance. Technical updating is not permitted, and shall result in the automobile being treated as a contemporary automobile.

The automobile being represented must be at least a two seater and have been made in significant numbers, with at least five registered for road use in the world.

The eligibility of such automobiles shall be entirely at the discretion of CAMS. Such automobiles shall comply with all relevant contemporary safety provisions.

5.12 Pivot point – suspension

(i) Spherical Bearing: The geometric centre of the spherical surface about which suspension movement occurs.

(ii) Plain or Elastomeric Bushing: The midpoint of the bushing along the axis of primary suspension movement.

5.13 Recognised model

A model which CAMS at its sole discretion, recognises as a model of automobile produced by a manufacturer in a given specification.

5.14 Reconditioning

To repair or restore to good or close to original condition, with no mechanical or performance advantage over its original condition.

5.15 Registration in the country of origin

Means the ability for an automobile to be registered in the country in which it was first manufactured and/or released.

5.16 Rotary engines

Rotary engines shall be deemed to be engines with rotary (rather than reciprocating) motion of the compressing medium (Wankel type). A rotary engine shall be defined as the rotor housings, intermediate and end plates and the eccentric (crank) shaft.

© Confederation of Australian Motor Sport Ltd. All use subject to Conditions of Use at *www.camsmanual.com.au*

5.17 Rotary port modifications

Mild/extended porting shall be defined as a single induction port per end/intermediate plate, per rotor, extended beyond the original induction port size and shape; save that it may not extend beyond the region traversed by the original rotor seal, the size and shape of such a port is free.

Peripheral porting is defined as a port on a rotary engine allowing the passage of gasses through the periphery of the rotor housing.

Bridge porting shall be defined as where the induction is accomplished utilising two separate induction ports per end/intermediate plate, per rotor, but not extending beyond the original outer edge of the inner water seal.

Any bridged induction port that is extended radially beyond the original outer edge of the inner water seal is, for the purposes of these regulations, considered to be a peripheral port.

5.18 Standard specification

As originally supplied from the manufacturer, including allowable production tolerances.

5.19 Suspension pick-up point

A bracket, lug or similar mechanical component attached to, or integral with, the fully sprung part of an automobile to which is attached a partially unsprung suspension component, and about which such suspension component moves through an arc or solid angle consequential to normal suspension travel.

6. PERMITTED MODIFICATIONS

Modifications to the automobile or its components other than those specified below are forbidden.

6.1 CAMS may produce recognition papers which will define the specification of a given model, and if such papers have been produced they must be presented at scrutiny by the competitor. If CAMS issues a recognition paper for a recognised model, this will be considered the definitive document.

Irrespective of the parts for which the present article lays down freedom of modification, the original mechanical parts necessary for the propulsion as well as all accessories necessary for their normal functioning, having undergone the normal machining operations laid down by the manufacturer for series production may be subjected to all tuning operations through finishing, scraping but not replacement; provided that the origin of the series production part may always be established, its shape may be ground, balanced, adjusted, reduced or modified through machining.

However, the modifications permitted by the above paragraph are allowed on condition that the weights and dimensions mentioned on the FIA homologation form, recognition documents, manufacturers manual &/ or published specifications and workshop manuals are respected.

6.2 Fasteners

Throughout the automobile, any nut, bolt, screw may be replaced by any other nut, any other bolt, any other screw and have any kind of locking device (washer, lock nutetc.).

6.3 Addition of material and parts

Any addition of material or parts is forbidden unless it is specified or required by an article in these regulations.

Any material removed is not to be reused.

Restoration of body shape and chassis geometry, following accidental damage, is permissible by the addition of the materials necessary to effect the repairs (body filler, weld metal etc); other parts which are worn or damaged are not to be repaired by the addition or attaching of material unless an article in these regulations allows appropriate freedom.

7. GENERAL REQUIREMENTS

General modifications to the Chassis, Sub-Frame, Monocoque and interior trim to facilitate the fitment of mandatory equipment and for the fitment of any other items permitted under specified freedoms within these regulations, are permitted.

7.1 Seats

(i) Seats and their mountings form an integral part of the primary safety system of an automobile.

Seats for the crew shall comply with Schedule C (refer to "General Requirements for Cars and Drivers" in the CAMS Manual of Motor Sport) or FIA 8855-1999. Seats complying with the FIA 8855-1999 standard are compulsory in international events.

(ii) The material from which seats are manufactured is free, including carbon fibre and Kevlar.

(iii) It is the responsibility of the competitor to ensure seat mountings are engineered with adequate strength to withstand the forces that may be experienced during a sudden stop.

(iv) The front seats may be moved rearwards, but not beyond the vertical plane defined by the front edge of the original rear seat (where originally fitted). The limit relating to the front seat is formed by the seatback at its rearmost point where the seat does not incorporate the headrest, and if the headrest is incorporated into the seat, by the rearmost point of the driver's shoulders.

7.2 Harnesses

A Type A harness (ie, a harness which includes a crutch strap) complying with the provisions of Schedule I (refer "General Requirements for Cars and Drivers") is required for each crew member.

For events entered on the FIA International Calendar, harnesses complying with FIA 8853/98 or subsequent FIA standards are required.

© Confederation of Australian Motor Sport Ltd. All use subject to Conditions of Use at *www.camsmanual.com.au*

7.3 Safety cages and rollover protection

Each automobile is required to be fitted with a rollover protection structure conforming to the provisions of Schedule J, save for any automobile exempted under Article 1.5 of Schedule J (refer "General Requirements for Cars and Drivers") or, where applicable, the FIA regulations for Safety Cages.

7.4 Fire extinguishers

Each automobile is required to carry a fire extinguisher or fire extinguishers complying with the provisions of Article 4 of Schedule H (refer "General Requirements for Cars and Drivers").

7.5 First aid kits

Each automobile is required to carry a first aid kit complying with Article 12 of Schedule R.

7.6 OK/SOS signs and safety triangles

Each automobile is required to carry an OK/SOS sign and Safety Triangles in compliance with Article 12 of Schedule R ("General Requirements for Cars and Drivers").

7.7 Lighting

Lighting shall be in accordance with Article 4 of Schedule R, and all lamps must comply with the Government regulations for the State or Territory in which the event is held.

7.8 Fuel

Fuel shall only be Commercial Fuel or Unleaded Racing Fuel as defined by CAMS in Schedule G (refer "General Requirements for Cars and Drivers").

7.9 Fuel tanks

(i) Fuel tanks are free but must be of safe design.

(ii) FIA FT3 standard fuel tanks are recommended. If an FT3 fuel tank is being utilised, the minimum amount of local modification of the bodywork to fit the fuel tank is permitted. An auxiliary fuel pump, to enable transfer of fuel to a swirl pot if required, is permitted.

7.10 Fuel pumps

On any automobile with electric fuel pump/s, the power supply to all such fuel pump/s must be cut off after a maximum of a six second absence of crankshaft revolution. Any automobile subject of a CAMS Historic Certificate of Description or FIA Historic Documentation, with which the automobile remains in compliance, are exempted from this requirement.

7.11 Wheels and tyres

(i) Wheels and tyres must comply with Schedule E.

Wheels may be manufactured only from aluminium alloy, steel or magnesium.

Tyres must be marked legal for road use as indicated by the presence of either DOT or ECE markings.

Any tyres marked "not for highway use", "for racing use only" or similar are not permitted.

(ii) The minimum tyre aspect ratio percentages are:

Groups C1, C2, C3

* Up to 1946	70
* 1947 – 1971	50
* post-1971	40

Lower aspect ratios are not permitted unless specified by the manufacturer as standard, in which case that profile is the minimum permitted.

Tyres that are not marked with a percentage aspect ratio by the manufacturer during the manufacturing process are not permitted, except where the tyre has an aspect ratio greater than 70.

Note: The tyre market is in a constant state of development and that continual monitoring will be required in relation to availability, which may result in ongoing amendment to this regulation.

(iii) Tyres must be fitted in accordance with the tyre manufacturer's published specification. The fitment of tyres to rims which are either too narrow or too wide for the tyre in question shall result in exclusion from the event at minimum.

(iv) All tyres must have a minimum tread depth of 1.5mm at any point on the tread normally in contact with the road other than at tread depth indicators.

It is the responsibility of the competitor to ensure that tyres remain in conformance with any civil regulations during liaison stages.

(v) In all cases, the correctly inflated tyre shall not foul the body, suspension or steering at any point in full movement of these components.

(vi) The maximum wheel rim width on any automobile is 9" unless wider is specified by the manufacturer as standard fitment, in which case that width is the maximum permitted.

(vii) For Group C1, wheel diameters may be varied by a maximum of ±1", and the width by up to 1" from the standard (not optional) dimensions.

For Groups C2 and C3, wheel diameters may be varied by a maximum of ±2", and the width by up to 2" from the standard (not optional) dimensions.

Notwithstanding, the maximum wheel diameter is 17" unless larger is specified by the manufacturer as standard fitment, in which case that diameter is the maximum permitted.

© Confederation of Australian Motor Sport Ltd. All use subject to Conditions of Use at *www.camsmanual.com.au*

7.12 Track

Except where varied by the following specific regulations, the track shall conform to the following requirement:

The upper part of the tyre, down to the wheel rim flange over the wheel hub centre must be within the perimeter of the automobile when viewed vertically from above (refer diagram 5).

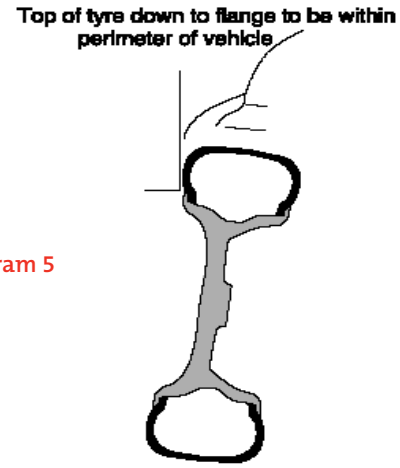

Diagram 5

7.13 Weight

(i) **General**

(a) The minimum weight must be in accordance with the manufacturer's original specifications, provided either by FIA or CAMS homologation papers, workshop manuals, or sales specifications (in that order of priority).

This weight will be deemed to include all liquid tanks to be at the normal operating levels as foreseen by the automobile manufacturer, except the fuel tank which shall be empty.

(b) Minimum competition weight will be established by taking the minimum weight as established in (i), plus 43kg (for tools, jack, one spare wheel and safety equipment).

(c) For the purposes of confirming weight during the competition, the organisers may refer to the minimum competition weight of the automobile, which is the minimum weight plus the actual weight of the crew as measured at pre-start scrutiny.

(d) If the organisers intend to use competition weight as the reference, this intention will be stated in the supplementary regulations for the event.

(e) It is recommended that fuel not be used for ballast as there could be miscalculation by the crew which could result in the automobile being underweight when measured.

(ii) **Minimum weight for Group C1**

The minimum weight for C1 will be checked if required, by weighing the automobile without persons or luggage on board, measured in accordance with Article 7.13(i) of these regulations.

(iii) **Minimum competition weight for Group C2**

The minimum weight for C2 shall be not more than 5 per cent below the manufacturer's original specifications, measured in accordance with Article 7.13(i) of these regulations.

(iv) **Minimum competition weight for Group C3**

The minimum weight for C3 shall be not more than 10 per cent below the manufacturers original specifications, measured in accordance with Article 7.13(i) of these regulations.

7.14 Steering

The steering wheel may be replaced by another, providing that

(i) It is not made of wood

and

(ii) Complies with all relevant civil regulations.

The addition of a power steering system fluid cooling system is permitted.

7.15 Bonnet restraints

Each automobile must have at least two independent fastening systems, of adequate strength and limited extensibility, which simultaneously hold the bonnet closed.

7.16 On-board cameras

Subject to approval of the organisers, cameras and video recorders may be fitted to automobiles competing in tarmac rallies.

Where the camera and recorder are combined into a unit (Camcorder) the unit must be fitted only to the rollover protection structure or other substantial part of the body shell of the automobile behind the crew. It must be mounted inside a safety cradle which fits closely around the body of the unit, which shall be from aluminium plate at least 5mm thick. The camcorder shall be held in place by a strap of at least 3mm x 25mm aluminium alloy held tight by means of self locking fasteners. The strap and cradle may be lightly padded. The cradle shall be constructed as shown in Diagram 6 below and held to the rollover protection by means of a

© Confederation of Australian Motor Sport Ltd. All use subject to Conditions of Use at *www.camsmanual.com.au*

metal clamp and at least two 6mm diameter class 8.8 bolts. Rollover protection type padding is to be placed on the outside of the cradle.

Where the camera is a small separate unit (eg, 'lip stick' lens), it need not be fitted inside the cradle described above, but the recorder shall be mounted in the luggage compartment, or where this is impractical (eg, hatchback automobiles), it shall be mounted inside a box made from aluminium of a minimum thickness of 5mm, held down by at least three 6mm diameter class 8.8 bolts.

The mounting of any on-board camera shall be approved by the Chief Scrutineer.

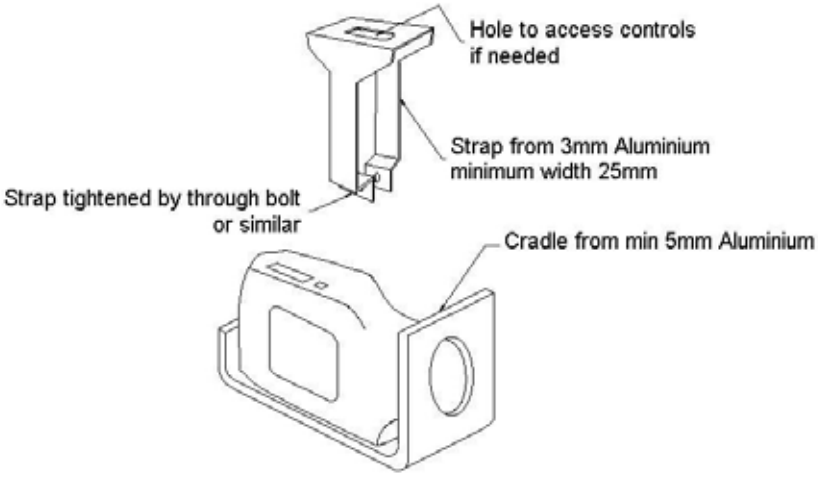

Diagram 6

Alternative cradle designs may be permitted subject to approval by the organisers on the advice of the Chief Scrutineer. No camera may be fitted in such a way that it relies solely on the camera's original tripod mounting.

7.17 Pedals

Removable 'pads' on brake, clutch and accelerator pedals are free.

7.18 Component substitution criteria

(i) The following tests will be applied to requests for usage of components in substitution for the original or genuine replacement original components.

1. *Is the original component no longer available or available only at an exorbitant cost, due to very limited availability?*

   If it is available, then the application will be rejected, because originality is the prime historic criteria.

   If it is not practically available then:

2. *Will the substitute component give a demonstrable performance gain?*

   Inevitably, any more modern substitute component for a competition automobile will have taken advantage of the gains in technology since the original component was manufactured, so some gain is axiomatic and may be acceptable, depending on the level of gain. Many substitute components are described as not giving a performance gain, but do provide improved durability or reliability. Improvements in reliability (usually strengthening of a component) can allow a performance improvement. Changes that provide larger porting or stronger bearing arrangements will give performance gain possibilities and would not normally be acceptable.

3. *Is the substitute component similar in appearance and design to the original?*

   Some minor variations would be acceptable (eg, casting numbers).

4. *Is the substitute manufactured from similar materials to the original component?*

   An alloy head replacing a cast iron head would not be acceptable.

(ii) Approved Substitutions

1. **Porsche Gearbox Case Substitution**

   Owners of 1972 to 1976 Porsche 911s may substitute the original magnesium gearbox casing with the aluminium gearbox casing of the same design, manufactured between 1976 and 1987, part number 915 301 100 1R.

7.19 Navigation instruments

Electronic or Mechanically driven Navigation instruments may be fitted provided that their sole function is to provide distance and speed measurements of the automobile.

© Confederation of Australian Motor Sport Ltd. All use subject to Conditions of Use at *www.camsmanual.com.au*

Specific Requirements

GROUP CI

PHILOSOPHY

This class envisages automobiles to be presented in the same condition they were supplied by the manufacturer, save for limited allowances to make them more suitable for rally competition.

For all except those automobiles in the Category 1 age grouping, a minimum of 500 automobiles must have been manufactured in the same specification over a period of five years.

Special low volume or, 'high performance' versions of automobiles are not permitted, nor are homologated competition versions or parts allowed. Appendix 1 provides a list of automobiles which are ineligible for classification in C1. This list may be expanded.

CAMS may produce recognition papers which will define the specification of a given model, and if such papers have been produced they define the specification and must be presented at scrutiny by the competitor.

1. ENGINE

Only the following engine modifications are permitted:

1.1 The cylinder block shall be:

(i) Original; or

(ii) A mechanically identical (refer Definitions Technical) substitute block, dimensionally interchangeable, from the manufacturer of the automobile, manufactured prior to 31 December 1981; or

(iii) A replacement block permitted by the CAMS Historic Commission for that automobile in Group N or S historic competition.

Substitute cylinder blocks shall be of the same type, configuration, number of cylinders and material as the original.

1.2 **Capacity** – Boring of the cylinders up to 1.5mm above the original diameter is permitted. The automobile will be classified according to its original capacity, inclusive of the relevant supercharging and rotary equivalence factors.

1.3 Pistons and piston rings or, where applicable, the rotors and seals of rotary engines are free save that they must be dimensionally the same as original except for the piston diameter and piston crown dimensions and shape, which is only allowed to be varied as per 1.2 above. The compression ratio must remain as standard.

1.4 The original cylinder head may be modified by the removal of metal only. The valve sizes must remain standard.

1.5 Camshaft timing and lift is free as are the timing gear/s, the timing chain and timing chain tensioning system.

1.6 Modifications to rotary engines rotors, housings and end plates may be effected only by the removal of metal. Rotary engines may be modified by the utilisation of the porting technique/s known as "Extend" and/or "Mild" porting. More extensive porting, including "Bridge" or "Peripheral" porting is explicitly not permitted.

1.7 The original ignition system must be retained save that 'pointless' distribution operation may be substituted for breaker points; and that freedom of mechanical and vacuum advance mechanisms is allowed, as is freedom of ignition wires, spark plugs etc.

1.8 Turbochargers or superchargers, if fitted as original equipment, must remain standard, as must the method of controlling boost or pressure. Induction boost pressure is free.

1.9 The original induction system components must be retained. The components which control the quantity of fuel entering the combustion chamber may be modified, provided that they do not have any influence over the quantity of air admitted. Air filter elements are free, providing they fit into the original air cleaner housing/s without modification of the housing. Additional air ducting is not permitted.

1.10 The exhaust system is free beyond the point of exit of the exhaust manifold. The exhaust pipe must exit at the original point on the automobile.

1.11 Fuel pumps are free. On all automobiles with electric fuel pumps, the power supply to all such fuel pumps must be cut off after a maximum of six seconds absence of crankshaft revolution. Automobiles subject of a CAMS Historic Certificate of Description or FIA Historic Documentation, with which the automobile remains in compliance, are exempted from this requirement.

1.12 The radiator may be replaced by another of the same height and width, with the same or greater thickness. The material of manufacture must remain the same as the standard part. The original cooling fan/s may be removed, and one electric fan may be added. Thermostats may be removed. Engine liquid cooling systems (ie, water and oil) must otherwise remain standard.

1.13 Air cooled engines must retain the standard cooling system, although the speed ratio may be changed.

1.14 A bolt on ancillary item may be replaced or changed.

1.15 The transmission clutch may be modified only by the changing of springs, diaphragms or linings.

1.16 Reconditioning of other engine components within the manufacturers' specified tolerances is permitted.

1.17 Internal baffling of the sump is permitted.

1.18 The oil filter element/cartridges is free, providing the element/cartridge fits without modification and does not perform any function other than filtering the oil.

2. GEARBOX/TRANSMISSION/FINAL DRIVE

2.1 Automatic transmissions provided optionally by the manufacturer for that model are permitted instead of a

© Confederation of Australian Motor Sport Ltd. All use subject to Conditions of Use at *www.camsmanual.com.au*

manual gearbox. The fitment of a manual transmission from the same make and model to an automobile that originally had automatic transmission is permitted.

2.2 Column gearshift mechanisms may be transferred to floor shift mechanisms; the minimum necessary modifications may be made to the transmission tunnel to accommodate such alteration.

3. CHASSIS/SUB-FRAME/MONOCOQUE

3.1 The chassis, and sub-frames and any monocoque structure must be standard except for any necessary modifications to the body shell in the immediate area to permit the fitment of a replacement seat or specified safety equipment. No part of the modified bodywork may extend any lower than the unmodified surrounding original bodywork.

3.2 Sump, gearbox and differential guards may be fitted, provided their primary function is to protect these components and they are attached by bolts.

4. SUSPENSION

4.1 Suspension components may be strengthened by the addition of metal, provided the added metal follows the contour and is in contact with the original component.

4.2 Springs, torsion bars and dampers are free, save for MacPherson struts where only the damping mechanism is free, provided their original mounting points and design are retained.

4.3 Lever arm dampers not forming part of the main suspension components (ie, they do not have a suspension locating function) may be replaced by telescopic dampers.

5. STEERING

5.1 Reversal of the driving side is permitted, on the condition that the modified automobile utilises parts foreseen by the manufacturer for such conversion for the model in question and conversions retain the original steering type (rack & pinion etc), must retain the original steering configuration and ratio and is accompanied by an engineers certificate signed by an accredited engineer accepted by an Australian road authority. It is highly recommended that a collapsible steering column be used.

6. BRAKES

6.1 The original front disc or drum brake components may be replaced by others. Callipers must originate from a production automobile manufactured within five years either side of the competition automobile's age period as specified in Article 1.

Front drum brakes may be replaced by a disc brake system. Suspension components must not be altered in order to fit different brake components, save for the minimum local modifications to adapt the brake calliper. Such components must be mounted by bolts. Alternatively, where a variant of that model is available with disc brakes, the 'knuckle' from the disc brake equipped model may be utilised provided no associated component is modified or replaced.

The disc is free, save that it shall not be a 'floating' type and shall be made entirely of ferrous material.

6.2 Drum rear brakes may not be replaced by disc brakes. However they may be replaced by other drum brake components, provided that these originate from a production automobile manufactured within five years either side of the competition automobile's age period as specified in Article 1.

6.3 Mechanical braking systems may be made hydraulic except for emergency/parking brakes.

6.4 Master cylinders are free, and tandem master cylinders are recommended. Brake bias adjustment by a pressure limiting device is free. Rear brake lines may be located inside the automobile.

6.5 Brake boosters may be added or deleted.

6.6 Brake backing plates may be modified or removed.

6.7 Brake lining or pad material and brake hoses are free.

6.8 Modifications to the firewall to install permitted brake modifications are allowed.

7. BODYWORK

7.1 Safety straps or clips on front and rear windows are permitted.

8. INTERIOR

8.1 Save for modifications required to comply with safety requirements, the addition of navigation instruments and the optional removal of floor carpets, the interior must remain unchanged.

8.2 The rear seat in any automobile may be removed only if required in order to permit the fitment of rollover protection and/or spare wheels.

8.3 The luggage compartment cover in hatchback design automobiles may be removed.

8.4 The seats occupied by the crew may be replaced with seats complying with Article 7.1 of the Classic General regulations.

9. ELECTRICAL

9.1 The wiring harness is free. Original instruments and switches may be replaced, provided that they are replaced by items compatible in face, style and size with the original instruments.

A panel incorporating additional/replacement switches and/or circuit breakers may be added. The battery may be replaced by another of free type but the location must remain as original.

© Confederation of Australian Motor Sport Ltd. All use subject to Conditions of Use at *www.camsmanual.com.au*

Specific Requirements

GROUP C2

PHILOSOPHY

An automobile which does not comply with the provisions of Group C1, or are limited edition automobiles or high performance original production variants from the same period as the original, will generally be classified as Group C2. A list of such automobiles is attached in Appendix A of these regulations. Other than Category 1, any automobile with a production run of less than 250 over a period of five years will normally not be eligible for C2 and may only be eligible in C3, subject to other relevant eligibility criteria being met.

Competitors entering low-volume produced automobiles may make application for a waiver of the production number which CAMS at its sole discretion will consider on its merits. Earlier automobiles may be more likely to receive such a waiver. If accepted, the automobile will be added to the list of eligible automobiles.

I. ENGINE

Only the following engine modifications are permitted:

1.1 The cylinder block shall be:

(i) Original; or

(ii) A mechanically identical (refer Definitions Technical) substitute block, dimensionally interchangeable, from the manufacturer of the automobile, manufactured prior to 31 December 1981; or

(iii) A replacement block permitted by the CAMS Historic Commission for that automobile in Group N or S historic competition.

1.2 **Capacity** – A maximum increase in capacity of 10% above the original capacity of the engine is permitted. The automobile will be classified in accordance with the actual capacity of the automobile, inclusive of any supercharging and rotary equivalence factors.

1.3 The crankshaft and connecting rods are free, save that the material must be ferrous or original. Crankshaft torsional dampers are free.

1.4 Pistons and piston rings are free or, where applicable, the rotors and seals of rotary engines are free.

1.5 Camshaft timing and lift and valve train components are free.

1.6 Modifications to rotary engine housings and end plates may be effected only by the removal of metal. Rotary engines may be modified by the utilisation of the porting technique/s other than "Peripheral" porting.

1.7 The ignition system is free (eg, a distributor may be replaced by another), save that the original configuration (eg, single coil with distributor, multi coil pack) must be retained. Electronic engine management and programmable ignition systems are not permitted unless fitted as original equipment. If so, the electronic engine management, programmable ignition system may be modified or replaced, provided the replacement system is from the same period as the original system.

1.8 The cylinder head must be the original or mechanically identical to the original and may be modified only by the removal of metal, addition of material, and valve size (save that the original number of valves and method of operation [eg, push rod, single overhead camshaft etc] must be retained).

1.9 For naturally aspirated automobiles the complete induction system is free save that fuel injection shall not replace carburettors, unless it was an option on another model of the same series of automobile. Where fuel injection replaces carburettors, all replacement items must be from the same period as the original items replaced. Additional air ducting, which does not involve the modification of the bodywork, is permitted.

Turbochargers or superchargers may not be added. If fitted as original equipment, the turbo and waste gate or supercharger may be replaced by another from the same period, fitted in the same positions as the original part. Induction boost level is free, provided that it remains fixed, and cannot be adjusted externally unless external boost adjustment is fitted as standard; in which case the original control must be retained and no other means of adjustment may be used. The remainder of the original induction system including any intercoolers must remain as original.

1.10 The exhaust system is free save that it must exit at either the original point or the rear of the automobile.

Notwithstanding, due to demonstrated clearance issues, the following automobiles are permitted side exit exhausts which must be positioned to the rear of the rearmost door, window or vent opening:

- Austin Healey 3000
- Shelby 350 GT

Other automobiles may be added if clearance issues can be demonstrated.

Note: This rule is intended to provide relief for control officials from an OH&S perspective, as side exit exhaust pipes can direct exhaust fumes directly at them.

1.11 Fuel pumps are free.

1.12 The engine liquid cooling systems are free; however the bodywork must not be modified to accommodate them.

1.13 Air cooled engines must retain the standard cooling system, although the speed ratio may be changed.

1.14 Bolt on ancillary items, may be replaced or changed.

1.15 Clutches and flywheels are free.

1.16 The sump may be modified to increase capacity. Internal baffling may be added.

1.17 All other internal engine modifications, other than those specifically addressed &/or limited in this Article, are free.

© Confederation of Australian Motor Sport Ltd. All use subject to Conditions of Use at *www.camsmanual.com.au*

1.18 The oil filter element/cartridges is free, providing the element/cartridge fits the original location without modification. The oil filter may be relocated and be remotely mounted within the engine bay. It is permitted to fit oil lines and adaptors in order to do so, providing these items attach to the original engine oil filter mount without requiring its modification. The oil filter and related fittings shall not perform any function other than filtering the oil.

2. GEARBOX/TRANSMISSION/FINAL DRIVE

2.1 (i) Internal components of the gearbox and final drive assembly, including ratios, are free, save that the original number of forward gears must be retained.

(ii) The fitment of a manual transmission from the same make and model to an automobile that originally had automatic transmission is permitted, provided that transmission was available during the Age Category. Automatic transmissions provided optionally by the manufacturer for that model are permitted instead of a manual gearbox. Transmission tunnel modifications necessary to allow the fitment of an automatic transmission are permitted.

2.2 Column gearshift mechanisms may be transferred to floor shift mechanisms, otherwise the method of actuating the gear change, (eg "H" pattern, pre-selector) must be retained. Shortened or "quick" shifters which do not result in modification to the casings or housings are permitted. Sequential change mechanisms are not permitted, unless originally fitted.

2.3 Full floating hubs may be fitted on automobiles with a live rear axle. A minimum modification to axle housings in order to fit such hubs is permitted and encouraged.

2.4 Additional transmission and/or differential coolers are permitted provided there are no body modifications required to fit them.

3. CHASSIS/SUB-FRAME/MONOCOQUE

3.1 The chassis, sub-frames and any monocoque structure must be standard except for any necessary modifications to the body shell in the immediate area to permit the fitment of a replacement seat or specified safety equipment. No part of the modified bodywork may extend any lower than the unmodified surrounding original bodywork.

3.2 The rollover protection structure shall comply with Schedule J, however, the structure must be contained entirely within the passenger compartment save for bars extending through the firewall in accordance with drawing 253-11 which are optional.

3.3 Seam welding is permitted. Further strengthening is permitted provided the added metal follows the contour of the original component.

3.4 Sump, gearbox and differential guards may be fitted, provided their primary function is to protect these components and they are attached by bolts.

4. SUSPENSION

4.1 Suspension components may be strengthened by the addition of metal, provided the added metal follows the contour and remains in contact with the original component. Hubs and stub axles may be replaced by others of the same working principle, providing that other suspension components that are required to be retained and remain unmodified are not changed or modified as a result.

4.2 The elastomeric material used in suspension bushes is free. The original design of the bush must be retained, save that the position of the hole for the locating bolt within the bush is free. Rose or heim type joints and/or spherical bearings are not permitted in the suspension unless fitted as original or unless permitted elsewhere by these regulations.

4.3 (i) Springs, torsion bars and dampers are free provided their original design (eg, coil, leaf, tubular, lever arm), number and location of mounting points are retained.

(ii) Coil spring mounting platforms may be made adjustable.

(iii) The mounting bushes for dampers which do not have a guiding function are free.

Notwithstanding, lever arm dampers not forming part of the main suspension components (ie, which do not have a suspension locating function) may be replaced by telescopic dampers.

Front lever arm dampers forming part of the main suspension components may be disabled, but not removed or replaced, and telescopic dampers may be added to provide the damping action. In doing so, none of the original suspension components or sub-frames may be modified, other than to provide the necessary mountings for the new dampers.

4.4 Sway bars are free other than on strut type suspensions where the sway bar acts as a control arm. In this case it is permitted to change the thickness of the bar &/or add an additional sway bar. The inclusion of spacers at the sway bar mounting points is permitted, but only by extending bolts in the original body mounts.

4.5 The location of live axles is permitted only by the addition of a maximum of two fore and aft locating arms and one transverse locating arm/rod. The design, position and mounting method of these arms are free, provided no modifications to the body shell are made, other than the addition of suitable brackets bolted or welded to the outside of the body shell. The locating arms are explicitly not permitted to be mounted inside the original cockpit, and modifications enabling this such as adding a box mounting will render the automobile ineligible.

4.6 Adjustable strut tops which may have the effect of altering the camber and/or caster are permitted (where applicable- ie, on MacPherson strut equipped automobiles). However, no modifications are permitted to the bodywork at the point where the strut top is mounted. Spherical bearings are permitted in front strut tops.

4.7 The addition of braces for strut/damper towers is permitted, provided they are only connected to each

© Confederation of Australian Motor Sport Ltd. All use subject to Conditions of Use at *www.camsmanual.com.au*

suspension tower, and are not connected at any other point of the chassis or bodywork. Attachment of such a brace must be only by bolts. The design of the brace is otherwise free.

4.8 It is permitted to relocate the front control arm pivot point radially by up to 25mm within the confines of the existing cross member or body panels. No metal may be removed save that directly associated with the actual pivot point relocation.

5. STEERING

5.1 Reversal of the driving side is permitted, on the condition that the modified automobile utilises parts foreseen by the manufacturer for such conversion for the model in question or conversions retain the original steering type (rack and pinion etc), must retain the original configuration and is accompanied by an engineer's certificate signed by an accredited engineer accepted by an Australian road authority. It is highly recommended that a collapsible steering column be used.

5.2 Power steering may be fitted.

5.3 The steering ratio is free.

6. BRAKES

6.1 The braking system is free; providing disc rotors do not incorporate carbon fibre or ceramic materials and that a mechanical handbrake is retained. A hydraulic hand brake may be added.

6.2 Master cylinders are free, and dual tandem master cylinders are recommended. Brake bias adjustment is free. Localised modification to the bodywork to allow fitment of pedal boxes and dual master cylinders is permitted.

6.3 Brake cooling ducts not involving body modifications may be added but these must remain within the perimeter of the bodywork when viewed from above.

7. BODYWORK

7.1 The use of any under trays, fairings, scoops, louvres, air intakes or exits (except as provided for in 6.3) are not permitted unless supplied by the automobile manufacturer as standard equipment in original production or the competitor can prove their legitimate use on the particular make and model in national or international level rally competition during the period in which the automobile was manufactured.

7.2 Easily demountable windscreens may be replaced by another screen of a period type. Safety straps or clips on front and rear windows are permitted.

7.3 The addition of front and rear aerodynamic aids, side skirts and mudguard flares is permitted provided these are identical with the components originally fitted to a production model of the same body shape and the items are fitted in accordance with the total original package configuration.

7.4 Bumper bars and 'over-riders' may be removed or replaced by ones of identical shape, but alternate material.

8. INTERIOR

8.1 Except for door trim (which shall be some form of rigid material [eg. aluminium, fibreglass, Masonite], covered in fabric) and dashboard and instrument binnacle, interior and fitments may be varied but shall be retained. The original heating system may be removed but an electric demist system or similar must be retained.

Any remaining trim should be of period style. Roof lining, carpets, the luggage compartment covers (in hatch back style automobiles) and rear seats may be removed. Boot trim in sedans may be removed, but must be retained in hatchback automobiles.

8.2 The material from which additional interior brackets, switch panels and other similar fitments are made is free, including the use of carbon fibre or Kevlar.

9. ELECTRICAL

9.1 The wiring harness is free. Original instruments and switches may be replaced, provided that they are replaced by items compatible in face, style and size with the original instruments. A panel incorporating additional/replacement switches of a compatible style and/or circuit breakers may be added.

The battery may be replaced by one of free type and may be relocated provided that it is located within an appropriate battery box and securely mounted.

© Confederation of Australian Motor Sport Ltd. All use subject to Conditions of Use at *www.camsmanual.com.au*

Specific Requirements

GROUP C3

PHILOSOPHY

It is envisaged that C3 automobiles can be modified to a greater degree than C2 automobiles. However, the modification level of such automobiles is controlled to a level deemed compatible with the environment within which these automobiles will compete.

Automobiles modified beyond the limits specified for Group C2, will be required to run in Group C3 subject to the limitations of this regulation. Automobiles homologated (FIA Group1-4) prior to 1 January 1982 (including Errata) can be presented in their entirety and will be required to run in Group C3. The use of individual parts (eg, cylinder heads) from homologated automobiles is prohibited unless otherwise permitted by the following regulations.

The minimum production number is five automobiles. It is the obligation of the Competitor to prove that the minimum quantity has been produced.

I. ENGINE

1.1 Engine requirements:

Other than turbo/supercharged automobiles where replacement is not permitted, the cylinder block shall be standard, or a replacement cylinder block is permitted subject to the following requirements:

(i) The replacement must be: a production cylinder block of the same configuration, with more than 2500 units sold for road use, which upon application may be approved for tarmac rallies by the CAMS Recognition Committee as a suitable replacement engine; or

(ii) Be a documented CAMS Historic Commission recognised replacement or substitute for use in this period, in which case the approved item shall be utilised in its entirety.

The guidelines for approval of replacement cylinder blocks are that the block shall:

- be produced prior to 1982
- be produced by the same manufacturer as the original
- have the same number of camshafts and location as the original
- have the same number of cylinders
- be made of the same material as original
- be able to be located in the same general location as the original. No body modification is permitted to allow the fitment of the replacement cylinder block.

In regard to Articles 1.2, 1.8, 1.9 and 1.10 following, references to 'original' shall mean the original engine fitted to that model, and not the replacement.

1.2 Capacity: The capacity shall not exceed 6000cc, unless the original was larger capacity. If the original capacity was over 6000cc, boring of the cylinders up to 1.0mm above the original diameter is permitted.

For the purpose of engine capacity increase, other than those over 6000cc, the capacity of the original automobile may be increased within the following requirements:

(i) Within the limits of the original capacity class, listed below:

0-1600cc
1601cc - 2000cc
2001cc - 2500cc
2501cc - 3000cc
3001cc - 3500cc
3501cc - 4000cc
4001cc - 4500cc
4501cc - 5000cc
5001cc - 5500cc
5501cc - 6000cc

OR

(ii) Alternatively, a maximum of 17% increase over the original capacity of the automobile is permitted.

The automobile will be classified according to its actual capacity inclusive of any bore or stroke increases (or decreases) and any relevant supercharging and rotary equivalence factors.

Rotary-engined automobiles are permitted to be fitted with engines with one size larger housing available from the original manufacturer, (eg, for Mazda engines, from 10A to 12A, or from 12A to 13B) over what was standard in the automobile. The same number of rotors as standard shall be retained.

1.3 The crankshaft and connecting rods are free.

1.4 Pistons and piston rings are free or, where applicable, the rotors and seals of rotary engines are free.

1.5 Cylinder heads are free provided that they retain:

© Confederation of Australian Motor Sport Ltd. All use subject to Conditions of Use at *www.camsmanual.com.au*

- The original number of valves
- The original method of actuation

1.6 Camshafts are free, providing the original number and location are retained.

1.7 Modifications to rotary engines rotors, housings and end plates may be effected only by the removal of metal. Rotary engines may be modified by the utilisation of the porting technique/s extend, bridge and peripheral.

1.8 The ignition system is free, save that electronic engine management systems are not permitted unless fitted as original equipment. If so, the electronic engine management system may be modified or replaced, provided the replacement system is from the same period as the original system.

1.9 Where fitted as original equipment, the turbo and waste gate or supercharger may remain standard or be replaced by another from the same period, and the turbo mounting flange is fitted in the same position as the original part. Turbo boost level is free, provided that it remains fixed, and cannot be adjusted externally. However, if external boost adjustment is fitted as standard, the original control must be retained, and no other means of adjustment may be used. The remainder of the induction system is free; including intercoolers, but these must be fitted without any modifications to the external bodywork.

1.10 For naturally aspirated automobiles the complete induction system is free save that fuel injection shall not replace carburettors, unless it was an option on another model of the same family of automobile from the same period. (refer CAMS Manual of Motor Sport, Definitions - Technical). Where fuel injection replaces carburettors, all replacement items must be from the same period as the original items replaced. Additional air ducting is permitted. The radiator support panel may be modified to allow fitment of induction system ducting but external body panels may not be modified.

1.11 Fuel pumps are free.

1.12 The exhaust system is free save that the exhaust pipe must exit at either the original point or the rear of the automobile.

Notwithstanding, due to demonstrated clearance issues, the following automobiles are permitted side exit exhausts which must be positioned to the rear of the rearmost door, window or vent opening:

- Austin Healey 3000
- Shelby 350 GT

Other automobiles may be added if clearance issues can be demonstrated.

Note: This rule is intended to provide relief for control officials from an OH&S perspective, as side exit exhaust pipes can direct exhaust fumes directly at them.

1.13 The engine liquid cooling systems are free, however, save for the radiator support panel which may be modified to accommodate the liquid cooling systems, the bodywork must not be modified to allow fitment, nor are additional air scoops permitted.

1.14 Air cooled engine cooling systems are free.

1.15 Bolt on ancillary items are free.

1.16 Clutches and flywheels are free, carbon components are permitted in the clutch assembly.

1.17 The sump is free and / or dry sump oil systems are permitted. Oil filters are free.

1.18 Engine mounts are free.

1.19 All other internal engine modifications, other than those specifically addressed &/or limited in this Article, are free.

2. GEARBOX/TRANSMISSION/FINAL DRIVE

2.1 (i) Gearboxes or transaxles may be replaced by another of free design, provided they have no more than five (5) forward gears and one (1) reverse gear, unless the automobile had more than five forward gears as original in which case the original number of gears shall be the maximum.

(ii) Automatic transmissions provided optionally by the manufacturer for that model are permitted instead of a manual gearbox.

(iii) Transmission tunnel modifications necessary to allow the fitment of a transmission are permitted.

2.2 It is permitted to modify the body for revised gearbox mounts and for the entry of the gear lever mechanism into the cabin.

2.3 The bell housing is free.

2.4 Column gearshift mechanisms may be transferred to floor shift mechanisms, otherwise the original method of actuating the gear change, (eg "H" pattern, pre-selector) must be retained. Shortened or 'quick' shifters are permitted. Sequential change mechanisms are not permitted unless originally fitted.

2.5 The configuration of the rear axle or final drive assembly must be as originally fitted to the automobile (eg, a live rear axle must remain in an automobile so equipped as original), but otherwise the rear axle or final drive assembly is free. Full floating hubs are permitted and recommended.

2.6 Limited slip differentials or other differentials which act to limit the differential action are permitted. Only mechanical differentials are permitted. "Mechanical limited slip differential" means any system which works purely mechanically, ie, without the use of hydraulic or electric actuators. A viscous clutch is not considered to be a mechanical system.

2.7 All transmission drive shafts are free.

2.8 Gearbox and differential oil coolers are permitted provided these are mounted without any modifications to the outside bodywork.

© Confederation of Australian Motor Sport Ltd. All use subject to Conditions of Use at *www.camsmanual.com.au*

3. CHASSIS/SUB-FRAME/MONOCOQUE

3.1 The chassis, sub-frames and any monocoque structure must be standard except for any necessary modifications to the body shell in the immediate area to permit the fitment of a replacement seat or specified safety equipment. No part of the modified bodywork may extend any lower than the unmodified surrounding unmodified bodywork.

Production variants (eg. automatic) of the original body shell for that automobile series are permitted, as is the installation of an automatic transmission tunnel into the manual version of that model.

3.2 Seam welding is permitted, as are other additional braces, gusseting and/or similar strengthening techniques.

3.3 Sump, gearbox and diff guards may be fitted, provided their primary function is to protect these components, and they do not provide any additional stiffness to the structure.

4. SUSPENSION

The suspension type/configuration as fitted front and rear must remain original (eg, MacPherson strut, dual wishbone, live rear axle, de Dion rear axle etc), but may be modified only in accordance with the following regulations:

4.1 All sprung and semi-sprung suspension components may be replaced, and/or modified. Suspension sub-frames are free, providing they are attached exclusively at the original mounting points.

4.2 The material used in suspension bushes is free. Rose joints, spherical bearings or heim joints may replace elastomeric bushings.

4.3 Springs, torsion bars, MacPherson struts and dampers and their mountings are free.

4.4 Anti-roll (sway) bars, mountings and links are free, save that they may not be adjustable from the cockpit. Automobiles fitted with existing cockpit adjustable sway bars shall have either the adjustment system sealed or the actuating rods removed.

4.5 Rear suspension is free, subject to the following:

For live rear axles:

- The body shell may be modified to allow the fitment of brackets to mount locating arms. To that end, the minimum required amount of metal may be removed from the standard body shell to allow the construction of a forward mount for the suspension arms inside the cockpit space.
- It is permitted make the appropriate modifications (such as removal of metal and welding in replacement panels of the necessary shape) in order to construct a "turret" in the rear wheel arch, inner guard and/or boot area, the purpose of which is to accommodate and mount the top of a damper or combined spring/damper unit.

  The cockpit space must be effectively sealed from the outside of the automobile in the area where such modifications are made.

4.6 Suspension pivot points are free.

4.7 Adjustable strut tops which may have the effect of altering the camber and/or caster are permitted (where applicable, ie, on MacPherson strut equipped automobiles). Modifications are permitted to the bodywork at the point where the strut top is mounted to allow clearance for the strut top.

4.8 The addition of braces for strut/damper towers is permitted.

5. STEERING

5.1 The steering system is free. All changes to the steering system must be accompanied by an engineer's certificate signed by an accredited engineer accepted by an Australian road authority. It is highly recommended that a collapsible steering column be used.

6. BRAKES

6.1 The brakes are free providing they do not incorporate ceramic materials.

6.2 Modifications to fit pedal boxes and/or dual master cylinders are permitted.

6.3 Cooling ducts may be added but these must remain within the perimeter of the bodywork when viewed from above.

7. BODYWORK

7.1 The bodywork and body fittings in their entirety must be as supplied by the manufacturer, including materials, save that:

- For automobiles homologated by the FIA in Group 1 - 4. If the latter, the homologated bodywork must be to the period specification

  OR

- Front mudguards, bonnet, nose panel, boot lid or rear hatch of alternative material are permitted, provided they are of the same external shape as the original panel. The following minimum specifications of alternative materials shall be respected: aluminium – 1.25mm thick; glass fibre/glass fibre reinforced plastic – 3mm thick.

7.2 (i) The use of any under trays, fairings, scoops, louvres, air intakes or exits is not permitted (except as provided for in 6.3) unless supplied by the automobile manufacturer as standard equipment in original production or the competitor can prove their legitimate use on the particular make and model in national or international level rally & circuit racing competition during the period in which the automobile was manufactured.

(ii) Notwithstanding the above, the addition of period style bonnet louvres and engine cooling ducts within the bonnet and/or front valance panel is permitted.

© Confederation of Australian Motor Sport Ltd. All use subject to Conditions of Use at *www.camsmanual.com.au*

7.3 Easily demountable windscreens may be replaced by another screen of a period type. Other glass in all windows except for the windscreen may be replaced by any transparent material of adequate strength (eg, polycarbonate), which must be fixed and operate in the same manner as the glass replaced. Such material shall be not less than 3mm thickness. Safety straps or clips on front and rear windows are permitted.

7.4 The addition of front and rear aerodynamic aids, side skirts and mudguard/wheel arch flares is permitted, provided these are identical with the components originally fitted to a production model of the same body shape and the items are fitted in accordance with the total original package configuration.

Where an automobile does not have access to such components, wheel arch flares may be added by integrating the flare with the guard or bodywork or by bolt-on means, provided that the increase in the total width of the bodywork is less than 100mm and that the flare may not exceed the radius of the original wheel arch opening by more than 200mm. (Refer to diagram 7.) In this case, the maximum track increase allowed is 100mm and for the purpose of wheel and tyre clearance, it is permitted to remove up to 75mm of original bodywork measured radially from the edge of the wheel arch outwards. Any cavity exposed in a door or wheel arch through the removal of metal must be covered by the addition of a metal closing panel. Any body joint protrusions must be rendered safe. The operation of any door must not be affected.

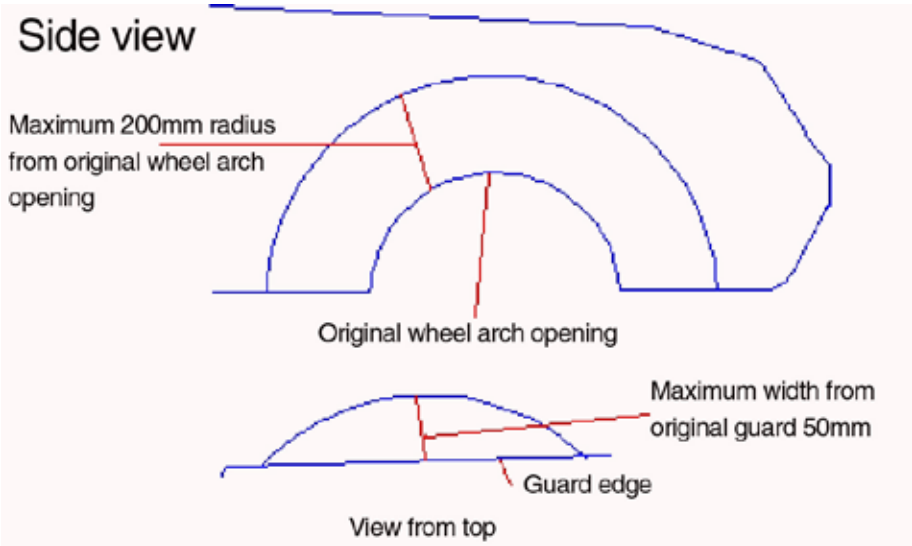

Diagram 7

7.5 Bumper bars and over riders may be removed, or replaced by others of the same shape, but of alternate material.

7.6 Roof vents may be added, provided they are of a style evident in competition prior to 1982.

8. INTERIOR

8.1 (i) Except for the door trim (which shall comply with the 8.1(ii)) and dashboard and instrument binnacle, interior and fitments are free. Any remaining trim should be of period style.

(ii) **Doors - Side trim:**

It is permitted to remove the soundproofing material from the doors, provided that this does not modify the shape of the doors.

It is permitted to remove the trim from the doors and replace this with a panel made from some form of rigid material other than carbon fibre or Kevlar [eg, aluminium, fibreglass, masonite], covered in fabric.

Alternatively it is permitted to remove the trim from the doors together with their side protection bars in order to install a side protection panel which is made from composite materials. The minimum configuration of this panel must comply with that shown on drawing 255-14.

If the original structure of the doors has not been modified (removal, even partially, of the tubes or reinforcements), the door panels may be made from metal sheeting at least 0.5mm thick, from carbon fibre at least 1mm thick or from another solid and non-combustible material at least 2mm thick and covered in fabric.

The rules mentioned above also apply to the trim situated beneath the rear side windows of two-door automobiles.

The minimum height of the door's side protection panel must extend from the base of the door to the maximum height of the door strut.

© Confederation of Australian Motor Sport Ltd. All use subject to Conditions of Use at *www.camsmanual.com.au*

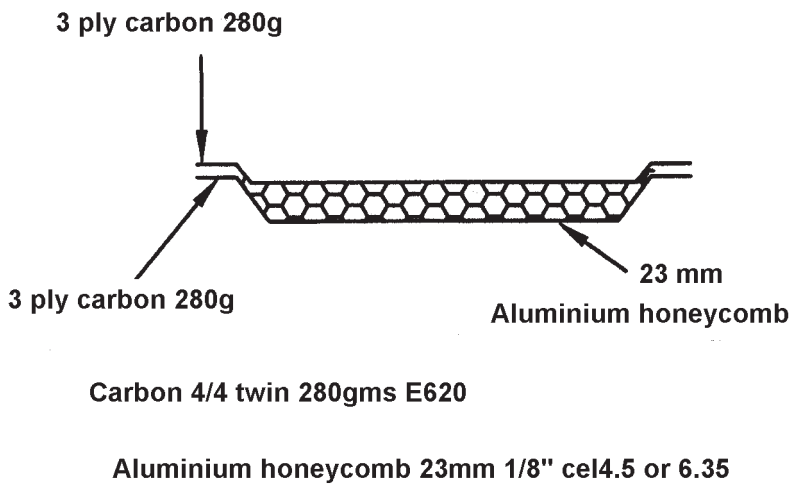

Drawing 255-14

8.2 The material from which additional interior brackets, switch panels and other similar fitments are made is free, including the use of carbon fibre or Kevlar.

8.3 The removal of heating and air conditioning systems is permitted, providing adequate provision is made for windscreen demisting.

9. ELECTRICAL

9.1 The wiring harness is free. Original instruments may be replaced, provided that they are replaced by items compatible in face, style and size with the other instruments. A panel incorporating additional/replacement switches and/or circuit breakers may be added. The battery may be replaced by one of free type and may be relocated provided that it is located within an appropriate battery box and securely mounted.

© Confederation of Australian Motor Sport Ltd. All use subject to Conditions of Use at *www.camsmanual.com.au*

Appendix I

AUTOMOBILES INELIGIBLE FOR CI

This is a list of automobiles eligible for C2 and C3, but which have also been deemed ineligible for C1.
This is not an exhaustive list and may be subject to change from time to time.

MAKE	MODEL
Alfa Romeo	GTA, GTAM, GTV6
Aston Martin	087 Vantage 5.9 Coupe; 5.9 Volante, V12, All Road 2.7
Austin Healey	100M, 100S
Austin	Mini Cooper S
BMW	3.0 CSL, M Series (all models – M1, M3, M5etc), 2002 Turbo, 5 Series 5.0
Bolwell	All models
Bugatti	All models
Chevrolet	Corvette IMSA, Corvette Callaway (all models), Camaro Z28
Chrysler	Valiant Charger RT, Pacer 4BBL
Datsun	1600 SSS, 180B SSS, 200B SSS
De Tomaso	Pantera, Pantera GTS
Ferrari	Boxer
Fiat	Abarth, Sport 131 Racing
Ford	Escort RS Series (Mk 1 & Mk II), Escort Mexico, Lotus TC, Falcon XC Cobra, Lotus Cortina, Cobra Jet, GTA, Mach 1, Falcon GT, Perana V8, Capri RS 3100, Escort Cosworth
Goggomobile	Dart
HDT	All models
Hillman	Imp Rally
Holden	Commodore SS, Commodore V8, Monaro GTS 327, Monaro GTS 350; Torana A9X, Torana GTR XU1, Torana SLR 5000
Jaguar	SS100, C Type, D Type, XK120M, E Type lightweight
Lancia	Fulvia HF, Stratos,
Lotus	S4, Elan R, Europa 49, Esprit Series 1
Marcos	3000 GT;
Maserati 3	500 GT, Ghibli Tipo 115, Bora, Merak, Mistral, Indy, Biturbo pre 1982
Mercedes-Benz	300SL & SLR
Mitsubishi	Sigma Turbo
Morris	Mini Cooper S
Pontiac	Trans Am
Porsche	356B 2000 GS, 550, 904, 906, 911 RSR, 911 Turbo, 911 Carrera, 911 Carrera RS, 914/6 GT, 916, 924 Carrera GT, 924 GTS, 924GTR
Renault	Alpine A310 V6, Alpine A110, R5 Turbo, Gordini
Robnell	All models
Saab	Sonett
Shelby	All models
Sunbeam	Tiger V8
Triumph	Dolomite Sprint

© Confederation of Australian Motor Sport Ltd. All use subject to Conditions of Use at *www.camsmanual.com.au*