RACE

Superkarts – Technical Regulations

1. CHASSIS

1.1 Identification: All Superkart chassis must be marked with a unique identification number in a visible position. This number will be recorded in the vehicle's log book.

1.2 Dimensions: The wheelbase must be at least 1000mm and not more than 1270mm.

The track must be at least two-thirds of the wheelbase.

The overall length must not exceed 2400mm.

1.3 Construction: The frame must be of all metal construction.

1.4 Bumpers: All karts must be fitted with bumpers front and rear. No component of the kart (other than the front fairing) may extend past either the front or rear bumpers, but may be mounted on or attached to the bumpers.

The fitment of side bumpers ("nerf bars") is compulsory where side pods are not fitted.

They must:

- be not higher than the rear axle;
- be of at least 15mm diameter and adequate wall strength;
- cover at least two-thirds of the tread width of the rear tyre.

A bumper is not required on the engine side of 250cc karts.

1.5 Suspension: Any suspension device is prohibited.

2. COACHWORK

2.1 Height: The maximum height of any part of the kart shall not exceed 710mm from the ground except for a structure solely designed as a head restraint with no possible positive aerodynamic effect; save that wings, including any end plates, may be not more than 1000mm above ground level.

2.2 Floor: There must be a floor, made from rigid material, which extends from the seat to the front of the kart. It must be edged on each side by a tube or rim to prevent the driver's feet sliding off the floor. It must not exceed the width of the bodywork including wings and end plates. If perforated, the holes must be of less than 10mm diameter.

2.3 Seat: The seat must be so designed that the driver is well located to resist movement towards the side or front when cornering or braking. It must be firmly attached to the frame by at least four mountings of adequate strength.

On 250cc Class karts, a headrest designed solely to limit the rearward movement of a driver's head in a collision situation must be fitted. Such a headrest must be "as one" with the seat and should not be detachable or adjustable in any form. The position of the headrest shall be such that the helmet must contact the headrest at a point no lower than two-thirds of the way up the back of the helmet with the driver in the correct seated position. Fitment of a helmet pad to the headrest is permitted.

On 250cc Class karts, the seat must incorporate a head restraint. In other classes, use of a neck brace is encouraged.

The driver must be able to see over the top of the steering wheel when seated in his normal position in the kart. The driver's legs must occupy the front half of the kart.

It is required that the reinforcement of the seat mounting points on the seat body with metal spacers be at least 1.5mm thick and 80mm minimum diameter.

© Confederation of Australian Motor Sport Ltd. All use subject to Conditions of Use at *www.camsmanual.com.au*

2.4 Numbers: The number plate must be rectangular, at least 230mm high x 270mm wide.

The relevant colours shall be:

Class		Plate	Number
85cc	Gearbox	Black	White
125cc	Gearbox	Red	White
250cc	Gearbox National	White	Black
250cc	Gearbox International	Yellow	Black
100cc	Junior Non-Gearbox	Blue	White
100cc	Senior Non-Gearbox	Blue	White
125cc	Non-Gearbox – light – heavy	 White Blue	 Red Yellow
125cc	Non-Gearbox Junior	White	Red

The numbers must be at least 200mm high and of 30mm stroke width. They shall be fitted to both front and rear of each kart. The front number shall be attached to the bubble or Nassau Panel. A third number plate shall be mounted on the side of the kart facing the timekeepers/lap scorers. The side number will be positioned in the area:

- no more than 500mm in front of the centreline of the rear axle;
- with the lower edge of the numbers above a horizontal line drawn through the top edge of the rear tyre;
- the plate itself must be vertical and parallel to the centreline of the kart.

Only advertising provided by the organisers, not exceeding 50mm in height, may be displayed, but it must not be affixed to the lower part of the plate.

National Superkart Champions in each class as well as second and third placegetters are allocated the use of the number 1, 2 and 3 respectively as their racing number in that class for the period during which they are National Champions or placegetters. The colours must be as specified for that class.

Karts driven by PSK Superkart licence holders must carry a standard "P" plate on the rear of the kart, 150mm square.

Karts driven by juniors must display the letter "J", at least 75mm high, on the rear number plate.

Competitors in the 125cc Non-Gearbox class may present a kart with numbers complying with AKA regulations for their first two meetings. Such non-compliance will be noted in the kart's log book.

2.5 Fairings: The fairings are free forward of the steering wheel save for classes with specific bodywork restrictions (refer article 9) and must not cover the driver rearward of the steering wheel when seated in the kart.

Fairings must not extend in width more than 50mm beyond the quadrilateral formed by the outer edges of the front and rear tyres. They must be completely hollow.

Fairings must be of safe and sound construction and must be securely fastened to the frame. The material is restricted to:

- glass reinforced epoxy or polyester resin;
- composite construction including Kevlar and carbon fibre substrate;
- aluminium at least 1mm thick;
- vacuum-formed ABS at least 2mm thick or comparable non-shatterable material.

Fairings must be easily removable for scrutineering.

2.6 Bubble: Perspex, plexiglass or fibreglass bubbles, of at least 1.2mm thickness may be fitted, but may not extend more than 75mm above the top of the steering wheel.

2.7 Aerodynamic aids: Aerofoils may be fitted save for classes with specific bodywork restrictions (refer article 9), and must be mounted on the frame of the kart with supports of at least 13mm x 2mm tubing, or equivalent. They must be firmly fixed in position, and not be adjustable by any means, whilst the kart is in motion and must not be used as containers. The leading edge of any aerofoil must have a minimum radius of 5mm. Recommended materials for construction of aerofoils:

- glass reinforced epoxy or polyester resin;
- composite construction including Kevlar and carbon fibre substrate;;
- aluminium at least 1mm thick.

Steel is prohibited (see Regulation 2.5 re. fairings).

2.8 Tail lights: Shall be Hella Dura Led Part No. 2307. Tail lights must be fed by a sealed battery and controlled from the cockpit by a waterproof switch. The light must be placed in an area located 400-600mm from the ground and 400mm maximum from either side of the central axis of the kart. It must be in working condition throughout the meeting. It must be switched on when the race is declared "wet" by the Clerk of Course.

© Confederation of Australian Motor Sport Ltd. All use subject to Conditions of Use at *www.camsmanual.com.au*

3. CONTROLS

3.1 Pedals: Whatever the position of the pedals, they must not protrude forward of the chassis, including the bumper (refer Article 1.4).

3.2 Throttle: The throttle must be operated by a pedal equipped with a return spring. The carburettor must incorporate a throttle return spring.

3.3 Steering: Steering must be effected by the operation of a full wheel or aircraft type wheel, which has a full metal frame. Straight handle-bars are forbidden.

Detachable steering wheels are permitted provided that they meet all other requirements and are approved by the scrutineers of the meeting.

Steering stops may be fitted.

The steering must be direct acting through a steel steering shaft of at least 16mm diameter if solid; or 19mm diameter if tubular having a minimum wall thickness of 1.5mm for 80cc Gearbox and 125 Gearbox Classes and 2mm for 250cc Gearbox Classes. The shaft shall be tapered, key splined, welded or bolted with a mating collar for steering wheel attachment.

The steering wheel boss must be manufactured of metal. Solid material, eg, nylon or hardwood, must be inserted through the steering column where the steering boss bolt passes through, in order to prevent the column collapsing when the bolt is tightened. The steering shaft shall have a fail safe system to prevent it being pulled from the lower bush or bearing. All steering linkage assembly bolts and nuts must be cottered, lock wired, or fitted with self-locking nuts (including king pin bolts).

The tie rods must be of at least 8mm OD steel rod, 10mm OD by 2mm steel tube, or 10mm OD aluminium rod, or 12mm OD by 2.6mm aluminium alloy tube. In all female components of all steering rod ends and steering tie rods, there must be an inspection hole of 1mm diameter drilled 8mm from the open end. When assembled the inspection hole must be covered by thread.

All bolts must be of at least 6mm diameter, of high tensile steel with a shear strength of not less than 6KN. All tie rods must have "Rose" joints or similar aircraft type universal joints. It is advisable that no steering components be chrome plated.

3.4 Each Superkart shall be equipped with a battery isolation (master) switch which effectively isolates all electrical circuits from the battery and stops the engine. It shall be capable of being operated by the seated driver and from outside the automobile. This switch shall be clearly marked by a symbol showing a red spark in a white-edged blue triangle.

Control switches for electrically powered devices and accessories must be located forward of the drivers elbow in the normal seated driving position, and be accessible to trackside officials with the driver seated. The allowable mounting areas are confined to; an area beside the forward part of the seat; the Nassau panel/ bubble area; or on the steering wheel. Switches may be toggle, slide or push-pull type, and shall be individually identified as to on/off position and function. Grouped switches shall be arranged so that all are 'off' and 'on' in the same direction or position.

4. WHEELS AND TYRES

4.1 Tyres: Tyres shall be pneumatic, with or without tubes, with a maximum outside diameter of 350mm. Retreaded or remoulded tyres are prohibited.

4.2 All **wheels** shall revolve on ball or roller type bearings, either as separately mounted wheels or on a rotating axle shaft. Cast iron and plastic wheels are forbidden. Wheels must be secured to their axles by either high tensile bolts or self-locking nuts.

4.3 For karts of the 250cc class, the attachment of wheels to hubs must be by stud and self-locking nut fixing, or single hub-nut and locking clip. This method is recommended for other classes.

4.4 The use of hand-grooved tyres is prohibited.

5. BRAKES

5.1 Brakes must be foot operated and provide efficient braking to at least the two rear wheels. Where there is free play at the ends of the axle keys a hose clamp or other positive mechanical method of key retention is required. All exposed brake pad mounting bolts must be drilled and lock wired.

5.2 Dual circuit braking systems are compulsory for 125cc Gearbox karts.

5.3 Dual circuit brakes on all four wheels are compulsory for 250cc Gearbox karts.

5.4 Brake cables, of multi-strand steel wire, must be of at least 2.25mm diameter. Cables must be fastened by a machine swage or by positive clamps which do not cut into the cable. Clamps must contact both main strand and return strand in two places at each end. Electrical connectors or similar devices are not permitted.

5.5 Brake rods must be of at least 6mm diameter, of solid steel. It is recommended that a secondary actuating method be securely fitted which will operate the brake master cylinder/s in the event of the detachment or failure of the primary link component/s fitted between the pedal assembly and the brake master cylinder/s assembly.

5.6 Brake hoses, lines and fittings are to be of suit-able pressure line materials designed specifically for hydraulic use. Brake lines shall be connected to components and fittings using male type supporting connections. The use of female type compression olive fittings alone is prohibited.

5.7 Brake calliper bolts must be of high-tensile steel and must be lock wired.

Brake calliper and master cylinder mounting bolts must be drilled and lock wired, or be secured by self locking nuts.

5.8 The use of carbon fibre disc rotors in Superkart racing is prohibited.

© Confederation of Australian Motor Sport Ltd. All use subject to Conditions of Use at *www.camsmanual.com.au*

6. ENGINE

6.1 Engines must be of two-stroke cycle only. Modifications are permitted.

6.2 The following classes shall be observed for all Superkart events:

85cc	Senior Gearbox
125cc	Gearbox
125cc	Non-Gearbox
125cc	Non-Gearbox Junior
250cc	Gearbox National
250cc	Gearbox International
100cc	Non-Gearbox Clubman

A 5% tolerance on swept volume, calculated on the designated class capacity, shall apply to engines with cast iron bore cylinders, but with the exception of 100cc non-gearbox and 85cc Junior Gearbox class engines. Engines manufactured with plated cylinders, eg, Nikasil, chrome etc, shall have a bore diameter not exceeding the original standard specifications for that make/brand, type and model engine.

Re-building and re-plating of damaged plated cylinders is permitted, provided that the original specifications are adhered to. Plated bore cylinders are not permitted to be re-sleeved to take advantage of this tolerance.

6.3 **Supercharging** of engines is forbidden.

6.4 All karts, if not fitted with a sealed cooling system, must be fitted with a **catch tank** of at least 250ml capacity for karts up to 125cc and 500ml capacity for those over 125cc to retain radiator overflow. Glycol-based coolants are prohibited.

Radiators must not be placed in front of the pedals or behind the rear bumper. Radiator caps shall be lock wired or pinned to prevent removal during racing.

6.5 The **exhaust system** shall discharge towards the rear and away from the driver and shall not exceed 500mm in height. The exit must not include sharp edges. The outlet of the muffler must be within the perimeter of the kart when viewed from above. The complete exhaust system must be securely fastened to the kart so as to ensure that it cannot fall should a mounting fail.

6.6 All karts must be fitted with **mufflers**. The maximum emitted sound is 95dB(A), measured at 30m from the track edge. The driver, seated normally, must be protected from all contact with the exhaust system.

7. TRANSMISSION

7.1 **Front wheel drive systems** are forbidden.

7.2 **Clutches** are compulsory.

7.3 All **gearbox drain plugs** must be lock wired and all other drain, indent plunger caps and filler caps must be wired.

7.4 **Engine sprocket and chain guards** are compulsory and must effectively cover the engine sprocket and the axle sprocket down to the centre line of the axle sprocket.

All chain guards must be securely attached to the kart at both ends.

7.5 All automatic methods of chain oiling and greasing are prohibited.

7.6 **Gearboxes** must be fitted with a breather pipe which discharges into an overflow bottle of at least 250ml capacity. Any discharge must be contained, and not fall on to the track.

7.7 Where the driver and other persons or their clothing may come into contact with a moving component that forms part of the engine or transmission, a guard must be fitted to prevent such contact occurring.

8. FUEL

8.1 Only fuels as defined by CAMS Schedule G (refer "General Requirements for Cars and Drivers" in the CAMS Manual of Motor Sport) shall be used, with the Superkart Gearbox Classes restricted to the use of fuel defined as "Commercial Fuel or 3. Leaded Racing Fuel" and the Superkart Non-Gearbox Classes are restricted to the use of fuel defined as "Commercial Fuel". The mixing together of pump fuels, or leaded and pump fuels, is not permitted.

Only commercially-available two-stroke oil lubricants that produce two-stroke fuel within the provisions of Schedule G may be added to the fuel. Additives not described as such upon proprietary fixed labelling are specifically prohibited, Performance boosters incorporated in the two-stroke oil are deemed to be illegal under the rules governing commercially available fuel.

8.2 **Fuel tanks** must be firmly fixed to the chassis or the floor tray and not by any temporary system of attachment. They must be constructed in such a way that neither they nor the fuel pipes, which must be flexible, present any danger of leakage during the competition. The tanks must be fitted with male connectors to accept the fuel line, which must be wired or clipped. If side tanks are fitted, they must be effectively protected by a bumper.

Fuel may be delivered from the fuel tank to the fuel pump only by gravity and/or by atmospheric pressure.

8.3 Tanks may be constructed of any leakproof material. Steel tanks must be manufactured from sheet minimum

© Confederation of Australian Motor Sport Ltd. All use subject to Conditions of Use at *www.camsmanual.com.au*

0.7mm thick.

Flame-retardant materials are recommended. Maximum capacity of any fuel tank: 18 litres.

8.4 **Taps** are optional. If fitted, they must be within easy reach of the driver when seated in the kart.

Tanks and fittings must not project beneath the floor pan.

8.5 For State and National Championship events, only the fuel provided by the organisers (paid for by competitors) may be used, for the duration of the meeting. Use of unauthorised fuel in any Superkart competition will result in a suspension of licence for a minimum period of two years.

The DIGATRON DT15 or DT-47 Series Fuel Testing Kit used as per manufacturer's instructions shall be used as an acceptable method of on-site fuel testing at these and all other Superkart meetings. CAMS retains the option to use any other fuel testing method.

9. SPECIFIC REGULATIONS FOR CLASSES

9.1 **Gear Box - 85cc, 125cc, and 250cc:** These classes shall be open to karts fitted with two-stroke engines. Permitted engines are subject to one of the following:

(i) being normally fitted to production motorcycles;

(ii) homologated for use in karting by the FIA or CIK;

(iii) approved for use by the Australian Motor Race Commission.

Modifications are allowed, subject to the general specifications complying with the Superkart Formula.

9.2 **85cc Gearbox Class (0-85cc):** In addition to Regulation 9.1 above, the following apply:

(i) not more than seven forward gears;

(ii) front wheel brakes are optional;

(iii) Engine: the 85cc class may be up to 85cc swept volume. Engines manufactured with plated cylinders (eg, Nikasil, chrome etc) shall retain the standard stroke, and are permitted to be re-bored and re-plated to achieve no greater than 85cc swept volume. Re-building and re-plating of damaged plated cylinders is permitted, provided re-working does not exceed 85cc swept volume.

The only engines and models permitted in the 85cc class are those produced by Yamaha (YZ), Suzuki (RM), Honda (CR), KTM, Kawasaki (KX) and TM Racing (TMBOE). Post-1993 manufactured Suzuki engines will not be permitted to exceed 85cc.

9.3 **125cc Gearbox Class (up to 125cc):** In addition to Regulation 9.1 above:

(i) not more than two cylinders per kart.

(ii) not more than seven forward gears.

Brakes must be fitted to both front wheels, as well as to the rear wheels. Karts must be equipped with a double circuit braking system so arranged that the pedal normally operates on the four wheels and in the event of the leakage at any point in the braking system, the pedal shall still control two wheels on the same axle.

9.4 **250cc Gearbox Classes (up to 250cc):** In addition to Regulation 9.1 above:

International:

- two cylinders maximum per machine
- two single-cylinder 125cc Gearbox engines are permitted.

National:

- single-cylinder per machine.

(i) brakes must be fitted to both front wheels, as well as to the rear wheels. Karts shall be equipped with a double circuit braking system so arranged that the pedal normally operates on the four road wheels and in the event of leakage at any point in the braking system, the pedal shall still control two wheels on the same axle.

(ii) all road wheels must have at least three bead retaining pegs, or bead retention lips, on both the inside and outside rims. Rear wheels must have a total of six retaining pegs, ie, three inside and three outside per wheel. **Penalty for non-compliance:** exclusion from the meeting.

9.5 **100cc Non-Gearbox Class (Clubman):**

(i) The only engine permitted is the YAMAHA KT100S, with a maximum bore of 53.00mm and a maximum stroke of 46.13mm, which must comply with the following Regulations:

(ii) **External modifications:** External modifications, which do not in any way effect a performance gain, are permitted.

(iii) **Internal modifications:** No additional material may be added except in the case of engine repairs and shall only restore engine or components to original specifications. (The cylinder may be repaired except on the timed area and all cast areas of ports.)

(iv) **Additions:** Additions shall be limited to the following: Chain guard, engine clutch mount, extension of carburettor jet needles, carburettor return springs, third bearing and adaptor, temperature gauge and tachometer.

(v) **Non-technical items:** Gaskets, seals, big end roller/cage, little end spacers, rings, washers, cages, fasteners, fulcrum spring (carburettor meter levering spring), spark plug lead and cap, gudgeon pin.

The above listed non-technical items are to be of the same type and style as the original, subject to the following provisions:

(a) Head gasket/s must be retained.

(b) Cylinder base gaskets are dimensionally free.

© Confederation of Australian Motor Sport Ltd. All use subject to Conditions of Use at *www.camsmanual.com.au*

(c) Carburettor base and phenolic spacer gaskets are dimensionally free.

(vi) **Exhaust, Intake and Transfer Ports:** Check the port height and width as per the diagram 9.5.1.

Exhaust:

(a) exhaust duration – free

(b) exhaust headers – free

(c) mufflers – free

(d) exhaust systems – must not be adjustable whilst the kart is in motion

Exhaust, Intake and transfer ports:

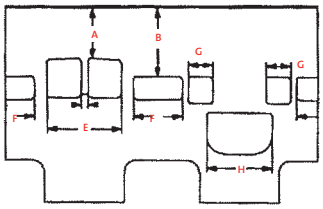

Width measurements are chord lengths

Diagram 9.5.1: Exhaust, intake and transfer ports

Check the port height and width as per the diagram.

CODE	DIMENSION	CODE	DIMENSION
A	26.29mm min	E	39.60mm max
B	36.07mm min	F	26.15mm max
		G	13.34mm max
D	3.40mm min	H	34.80mm max

Diagrams are for dimensional reference only

(vii) **Air intake silencer:** an FMK/FIA-type induction silencer must be fitted and mounted direct to the carburettor by means of the designated adaptor. The adaptor must meet the dimensions shown in diagram 9.5.2.

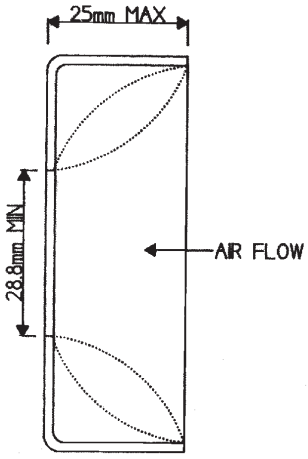

Diagram 9.5.2:
Air intake silence adaptor

All cylinder ports are to be in "as cast" condition except at the junction of the cast iron sleeve and aluminium jacket. Grinding is permitted to remove casting irregularities at the junction ONLY. No chamfer on port edges is permitted.

(viii) Modifications which affect the following are specifically prohibited:

(a) change the roof angle

(b) alter port height, width or angle

(c) change the shape or size of the passages from the cylinder base to the port

(d) match the case to the port passages.

(ix) Sandblasting glass beading, peening etc are NOT a substitute for "as cast" condition.

(x) Due to manufacturing procedures, it is possible that some engines may have slightly "broken" port edges. When this exists it shall be uniform on all port edges (tops, bottoms and sides) of all ports in the cylinder. The intersection of the port edges and the cylinder wall must still be within the technical measurements. As the bore size increases the amount of "break" diminishes. If the cylinder bore is 52.45mm or larger, no "broken" edges are allowed.

(xi) Due to manufacturing procedures, some KT-100SD and KT-100SE engines have some minor factory grinding on the parting lines in the inlet and exhaust passages. Also some have minor grinding on the transfer divider bridges and some evidence of casting irregularities removed in transfer passages, this includes the transfer area in the crankcase.

(xii) **Cylinder head:** Must be original Yamaha casting. Any machined surfaces may be re-machined. The head gasket face may not be machined below the cast surface of the lower fin. The combustion chamber volume shall be a minimum of 11cc. The cylinder head squish must not protrude beyond the sealing face.

© Confederation of Australian Motor Sport Ltd. All use subject to Conditions of Use at *www.camsmanual.com.au*

Maximum spark plug thread shank length shall be 20mm.

(xiii) **Head gasket/s:** Must be retained.

(xiv) **Piston:** Piston must be approved and stock appearing.

Legal pistons are:

Yamaha	**Burris**	**Wiseco**
Vinart	**KSI**	**KSI MkII**
Potenza	**Vertex**	**Strike**

Bottom of piston should be 90° to sides. It is permissible to notch the piston to allow the removal of circlip. The piston skirt length may be machined, providing it conforms with the current specifications as laid down in these Rules.

(xv) **Gudgeon pin:** No special alloys permitted.

(xvi) **Connecting rod:** Only connecting rods manufactured by Yamaha or KSI are allowed.

(a) Minimum/maximum rod length, centre to centre: **99.87mm - 100.13mm.**

(b) Conrod alignment may be either top or bottom.

Bearings and spacers are non-tech items.

(xvii) **Crankshaft:** Crankshaft must be by the original engine manufacturer.

(a) Outside diameter measurement: **87.25mm max, 86.60mm min**.

(b) Crank pin to be standard hollow pin.

Note: If crank is narrower than 8.84mm then disassemble engine and check the width.

Crankshaft wheel width: **45.59mm min.**

(xviii) **Crankcase:** The crankcase ports will remain as cast. The minimum chordal distance measured with a vernier calliper across the widest section of the transfer ports shall be 97.5mm minimum. (Refer diagram 9.5.6.)

Note: Existing crankcases that are narrow may be spaced with a thicker gasket.

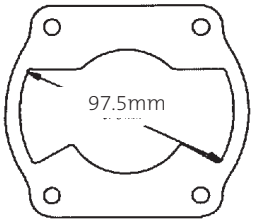

Diagram 9.5.6: Yamaha KT 100S

Diagrams are for dimensional reference only

(xix) **Ignition:** The fitting of one of the following approved TCI modules is permissible:

Yamaha	**Victa**
Atom	**Delta/Wei Shieh**
Sig	**Nova**

No modifications or repairs to any of the listed approved modules is permitted.

Ignition timing may be adjusted only by the removal of the locating key or part thereof. All engines must rotate in a clockwise direction when viewed from the drive side.

(xx) **Carburettor:** Must be Walbro WB series conforming to dimensions as per diagram 9.5.7.

(a) It is permissible to machine the Walbro carburettor body to accept an O ring for the low speed jet.

(b) A threaded butterfly screw must be retained.

(c) Pump diaphragms: either Teflon or rubber types are legal.

(d) It is permissible to repair the inlet seat and throttle shaft in the Walbro carburettor.

(e) It is permissible to resize existing fuel/air holes.

(f) All air must pass through the carburettor venturi.

(g) Measurement code:

A As cast MAX Venturi diameter **24.13mm**

B As cast (area will extend from the front of the carburettor to the progression discharge jet which must have all or portion of this jet in the cast area)

C MAX downstream diameter **25.7mm**

D Butterfly shaft must be located at the bore centre

E MIN carburettor body length of **37.5mm**

© Confederation of Australian Motor Sport Ltd. All use subject to Conditions of Use at *www.camsmanual.com.au*

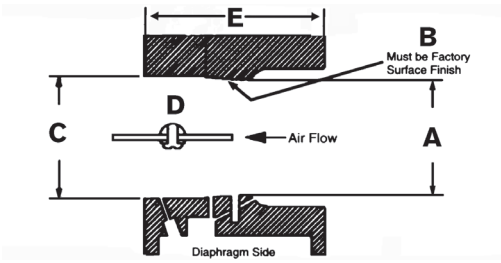

Diagram 9.5.7: Carburettor

Diagrams are for dimensional reference only

(xxi) **Inlet tract length:** The length of the inlet tract from the outer face of the aluminium carburettor adaptor plate to the outer face of the skirt of the piston must not be less than 65mm.

(xxii) **Phenolic spacer:** Bore size **26.42mm max.**

(xxiii) **Aluminium carburettor mount plate:** Bore size **26.69mm max.**

(xxiv) **Auxiliary parts:** Seat back rests must be at an angle of not less than 45° from the horizontal. Steering stops may be fitted. Brakes must operate on the rear wheels only.

(xxv) **Tyres:** Tyres may be selected from:

- **Dunlop** **SL4, SL6**
- **Bridgestone** **YGK**
- **Vega** **XSLa front, XSL rear**
- **Maxxis** **HG3**
- **MG AZ Red** **(front 4.50 x 10.0 x 5, rear 7.10 x 11.0 x 5)**

Should a race be declared "wet", any brand of wet weather tyre fitted to a 5" diameter rim is permitted.

At the completion of time trials or the first heat of the race meeting, all tyres must be marked by the scrutineers. Only those tyres may be used for the remainder of the race meeting, save that one front and/or one rear tyre may be replaced at the scrutineers' discretion.

(xxvi) **Clutch:** A clutch is are mandatory and must be of the engine type. The use of Yamaha clutches is compulsory in all karts competing in the 100cc Non-Gearbox Junior Class. No form of variable torque multiplier is permitted other than that produced by the natural slippage of the clutch.

(xxvii) **Bodywork:** Bodywork is permitted on Superkarts of 100cc and 125cc Non-Gearbox Classes.

Such body work must respect the following conditions:

- nose cones, bubbles and side pods are allowed;
- all bodywork forward of a vertical plane, drawn through the centre line of the front wheels in their straight-ahead position and at right angles to the centreline of the kart, must fall within the area of the template described in diagram 9.5.8;

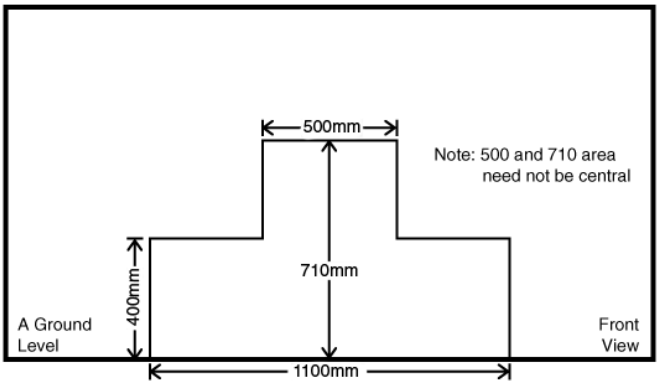

Diagram 9.5.8: Body Template

Diagrams are for dimensional reference only

- no bodywork rearward of this vertical plane shall extend further than 300mm rearward of that plane; be more than 710mm above the ground, be closer than 300mm to the ground, nor wider than 500mm as shown by the template described in diagram 9.5.9.

© Confederation of Australian Motor Sport Ltd. All use subject to Conditions of Use at *www.camsmanual.com.au*

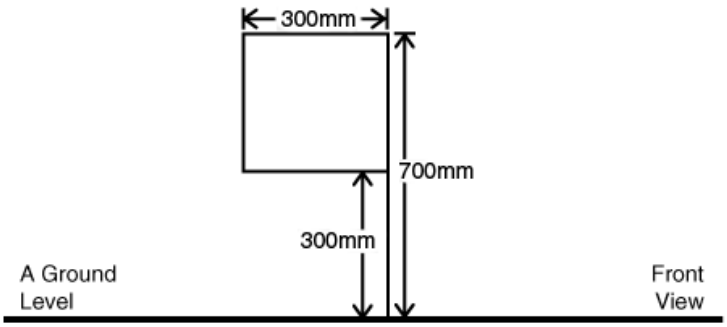

Diagram 9.5.9
Diagrams are for dimensional reference only

- side pods are compulsory and must comply with the following compulsory Technical Specifications (refer diagram 9.5.10):
  - They must under no circumstances be located either above the plane through the top of the front and rear tyres or beyond the plane through the external part of the front and rear wheels (with the front wheels in the straight ahead position). In the case of a "Wet Race", the side pods may be located outside the plane passing through the outer edge of the rear wheels.
  - They may not be located inside the vertical plane through the two external edges of the wheels (with the front wheels in the straight ahead position) by more than 40mm.
  - They must have a ground clearance of 25mm minimum and of 60mm maximum.
  - The surface of the side pod must be uniform and smooth; it must not comprise holes or cuttings other than those necessary for their attachment and, in 100cc NGB for the passage of the external starter shaft.
  - Gap between the front of the side pod and the front wheel: 150mm maximum.
  - Gap between the back of the side pod and the rear wheel: 60mm maximum.
  - No part of the side pods may cover any part of the driver seated in his normal driving position.
  - The side pods must not overlap the chassis-frame seen from underneath.
  - On the outer side they must comprise a vertical surface (with a tolerance of ± 5° in relation to the theoretical vertical plane) with a minimum height of 100mm and a minimum length of 400mm located immediately above the ground clearance.
  - They must not be able to hold back water, gravel or any other substance.
  - They must be solidly attached to the side bumpers.
  - Materials: non-metallic; carbon fibre, Kevlar and fibreglass are forbidden. If plastic, it must be non-splinterable and it must not have any sharp angles which could cause possible breakage.

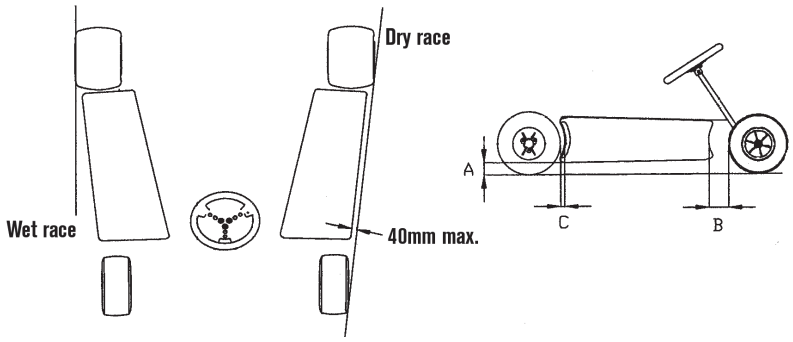

Diagram 9.5.10
A – 25mm minimum to 60mm maximum
B – 150mm maximum
C – 60 mm maximum
Diagrams are for dimensional reference only

- each kart must be fitted with a flat floor tray, made of rigid material which extends from the front of the seat to the front of the kart only, which covers the whole width of the kart between the outer edges of the main longitudinal frame rails and which is no wider at any point than the main longitudinal frame rails;
- each kart shall be fitted with a minimum of three number plates, each not exceeding 300mm x 300mm and otherwise complying with the requirements of Superkarts – Technical Regulations Article 2.4. Rear side plates are only permitted if used to carry the number plate and must be no larger in width or height than necessary to carry the required numbers.

(xxviii) Either of the following driver's licences is valid for this class:

- PSK Superkart
- NSK Superkart

© Confederation of Australian Motor Sport Ltd. All use subject to Conditions of Use at *www.camsmanual.com.au*

(xxix) Engine measuring procedure for the Yamaha KT100s and Rotax FR125 Max using official gauges: The gauges have been designed to make engine measuring quick and easy. If an engine fails when measured with these gauges, the competitor may request that the engine be re-measured using normal precision measuring tools.

Port timing check with Piston Travel Gauges

Step 1 – Set Gauge

Screw the body unit of the piston travel gauge into the spark plug hole and insert the rod for the type of engine being checked. Turn the engine in its direction of rotation till the conrod reaches its highest point of the engine stroke TDC, adjust the head of the body to line up with the bottom mark of the rod.

Step 2 – Check Stroke

Slowly turn the engine in its direction of rotation till the rod is at its lowest point BDC and the top mark on the rod should line up with the head. The stroke is: 46.13mm for KT100S and 54.52mm (max) for Rotax FR125 Max.

Step 3 – Check Exhaust Duration

Place the 5mm pin in the top of the exhaust port and slowly turn the engine in its direction of rotation until the top of the piston touches the 5mm pin which is then "rolled" between the top of the piston and the exhaust port to find the highest point of the exhaust port. Using very light pressure to hold the pin in place the next or second mark on the gauge should not be showing or is in line with the head of the gauge body. If the line is above the head of the gauge body the barrel has exceeded the maximum exhaust port height allowed. Exhaust duration measured from TDC is: 30.8mm for KT100S and 33.8mm (max) for Rotax FR125 Max.

Step 4 – Check Inlet Duration

Maintain the 5mm pin in the exhaust port, adjust the head of the gauge unit till it lines up with the second mark then remove the pin from the exhaust port. Turn the engine to TDC and insert the 5mm pin into the inlet port and turn the engine slowly till the piston comes into contact with the 5mm pin which is to be "rolled" between the bottom of the inlet port and the piston skirt to find the lowest position of the piston, the third line on the rod should be above the head of the gauge or in line. If it is below then the piston is to short and does not conform. Inlet duration measurement is: 14.8mm for KT100S.

(xxx) **Method of measuring cylinder head volume:**

Step 1: Remove spark plug and insert measuring plug (see diagram **9.5.11**).

Step 2: Place piston at approximately TDC.

Step 3: The measuring plug to be withdrawn two turns.

Step 4: Insert the specified volume of liquid (50% distillate and 50% auto transmission fluid, approximately), using "B" Grade burette calibrated to 1/10 of a cc. under gravity feed. Make sure that the fluid is visible in the measuring plug.

Step 5: Tighten the measuring plug down until it stops.

Step 6: Slowly wind motor over and check for fluid level in measuring plug. No fluid shall be expelled through the top of the measuring plug.

(**Note:** Motor to be measured should be allowed to cool to ambient temperature.)

Step 7: Should the first test fail, the competitor may request a second test. This test is to repeat Steps 1 to 6 above (after Step 8).

Step 8: To clean out measuring fluid after the failure of the first test and before commencement of the second test, unleaded petrol is to be poured into cylinder, the motor is to be rinsed and blown out by inserting an air hose into the spark plug recess and turning the piston to open the exhaust, thus expelling excess fluid.

The cylinder head is not to be removed.

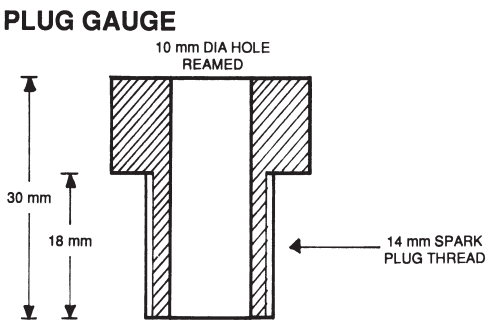

Diagram 9.5.11: Measuring Cylinder Head Volume

Diagrams are for dimensional reference only

© Confederation of Australian Motor Sport Ltd. All use subject to Conditions of Use at *www.camsmanual.com.au*

(xxxi) **Chassis:** Circular section tubing only. Maximum diameter for chassis tubing is 35.5mm (inclusive of paint). The only stub axle mounting system permissible is as per diagram 1.1 shown below. Maximum wheelbase 106cm.

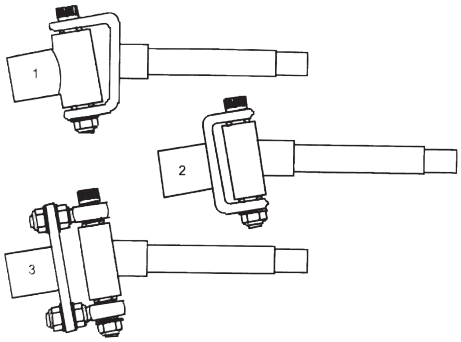

Diagram 1.1 – Stub axle mounting system

Diagrams are for dimensional reference only

9.6 125cc Non-Gearbox Class

1. **Chassis, running gear and coachwork:** Must comply with current Superkarts - Technical Regulations as apply to the 100cc Non-Gearbox class with the following variations or clarifications:

(i) **Nose cones:** Must comply with Superkarts - Technical Regulations, Article 9.5 (xxvii).

(ii) **Brakes:** Must consist of a single disc and calliper acting on the rear axle. Front wheel brakes are prohibited.

(iii) **Tyres & Wheels:** All wheel rims must be 5" diameter.

Tyres must be selected from:

Dry	Bridgestone YGK or YJC Dunlop SL6 Vega (XSLa Front, XSL Rear) Maxxis HG3 MG AZ Red (Front 4.50 x 10.0 x 5, Rear 7.10 x 11.0 x 5) MOJO D2
Wet	Free (must be fitted to 5" rims)

(iv) **Chassis:** Circular section tubing only or maximum of one main rail not round. Maximum diameter for chassis tubing is 35.5mm (inclusive of paint). The only stub axle mounting system permissible is as per diagram 1.1 shown above. Maximum wheelbase 106cm.

Maximum rear axle diameter: 50.0mm.

(v) **Composite materials:** Composite materials are not permitted save for the construction of seats, fairings and the floor tray. Carbon fibre and Kevlar are not permitted Other than for the driver's seat.

(vi) **Steering:** Must comply with Superkarts - Technical Regulations, Article 3.3.

(vii) **Drive sprockets:** Free.

(viii) **Electrical:** An ignition switch must be fitted and must be accessible to track-side officials whilst the driver is in the driving seat and must be identified:

(a) with a blue label around the switch and

(b) by means of a blue triangle with sides of at least 50mm marked with a red arrow located on the bodywork outer surface.

The battery leads must be removable without recourse to tools.

(ix) **Tail light:** Must comply with Superkarts -Technical Regulations Article 2.8.

2. **Engine:** The only engine permitted is the BRP Rotax FR125 Max.

Unless expressly permitted under these regulations, all engine and driveline parts must be of Original Equipment Manufacture (OEM) by BRP Rotax Gmbh.

Non-technical items are battery, fuel filter, radiator hoses, clamps, pulse line, switches, ancillary mounts, fasteners, circlips, washers, bearings, spark plug, gaskets, O-rings, piston pin, springs, seals, clutch drum, engine sprocket, rings, starter motor and clutch flywheel. No alteration from the original manufacturer's specification is permitted to fit a non-technical item.

(i) **Cylinder head capacity:** Shall be a minimum of 11.0cc using the method detailed in the Superkarts - Technical Regulations, Article 9.5(xxx).

(ii) **Displacement: 125.0cc maximum.**

(iii) **Combustion chamber insert:** Only Rotax part number 223 389 389 or 223 389 1 or 223 389 2 may be used. The name Rotax or 'made in Austria' must be cast into the combustion chamber insert. No additional material may be added except to repair the spark plug thread and or spark plug sealing surface. All machined surfaces may be re-machined. The insert must retain both squish band and spherical combustion chamber. An 'O-ring' must be fitted.

(iv) **Spark plug thread length:** The maximum spark plug thread length is 20mm.

© Confederation of Australian Motor Sport Ltd. All use subject to Conditions of Use at *www.camsmanual.com.au*

(v) **Piston:** Only pistons which are OEM and comply with the following regulations may be used.

(a) Coated or uncoated, aluminium, cast piston with one and only one 1.0mm rectangular piston ring.

(b) Machined areas are: top crown of piston, outside diameter, one groove for the piston ring, bore for gudgeon pin, inside diameter at bottom end of piston. No other surfaces are machined.

(vi) **Gudgeon pin:** Gudgeon pins which comply with the following measurements may be used:

Length	45.6mm max ± 0.45mm
External Diameter	15.0mm
Internal Diameter	10.0mm max

(vii) **Cylinder:** Only cylinders supplied by Rotax and complying with the following regulations may be used.

Light alloy cylinder with Gilnisil plating. Replating is permitted.

Maximum bore	54.035mm (measured 10mm above exhaust port)

Cylinder must be marked with Rotax logo.

Cylinder base must be marked with manufacturer's identification code: 223 997.

No additional machining of ports or passages.

Cylinder must have official Formula Rotax Australia stamp on the inlet face.

Junior class to use only cylinder without exhaust power valve. Cylinder has to be marked with ROTAX logo and identification code: 223 999 or 223 998.

Length of cylinder	87mm with +0.1 / -0.05mm tolerance

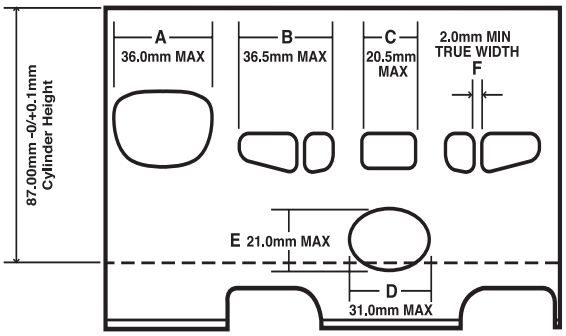

Diagram 9.6.1: Flat Port Development FR 125 Junior Max

Diagrams are for dimensional reference only

(viii) **Cylinder base gasket/s:** Must be dimensionally the same size and shape as original equipment and shall not have the effect of decreasing the size of the transfer ports.

(ix) **Inlet system:** No material may be added and no grinding or machining is permitted to any part of the inlet system including the manifold and reed valve assembly.

The manifold must carry the manufacturers name ROTAX and identification code: 267 915.

The reed valve assembly must carry the manufacturer's name ROTAX and identification code: 224 387 or 224 389.

The reed valve assembly must be equipped with two petal stops and two reeds, each having three petals.

Thickness of reeds	0.6mm +/- 0.08mm
Reed block gasket/spacer thickness	4.0mm max.

The addition of one Rotax reed block gasket, maximum of 1.0mm thick, between the carburettor manifold and the reed block is permitted.

(x) **Exhaust powervalve:** No modifications are permitted to the exhaust powervalve. The original spring must be fitted. No external adjustment or blocking to this device whilst the engine is running is permitted. Maximum thickness of powervalve gasket/s is 2.0mm. Additional fasteners or securing devices may be fitted/added. The length of the exhaust valve is 36.5mm +0.2/-0.3mm. Exhaust Valve Evolution is approved part ID 230 260.

(xi) **Crankshaft:** No modifications are permitted to the crankshaft.

Stroke	54.5mm +/- 0.02mm.

© Confederation of Australian Motor Sport Ltd. All use subject to Conditions of Use at *www.camsmanual.com.au*

(xii) **Balance shaft:** No modifications are permitted to the balance shaft, which must be installed and operational. The balance shaft shall be either part number/type 237 945, 237 948 or 237 949 .

The minimum weight of the dry balance shaft is 355 grams for part number/type 237 945 and 255 grams for part number/type 237 948 and 237 949.

(xiii) **Connecting rod:** No grinding /polishing or modifications are permitted.

Connecting rod must bear the manufacturer's stamp of "213" or "365" or "367" on the shaft.

(xiv) **Crankcase:** The two main transfer passages of the crankcase must remain untouched as supplied.

The official Formula Rotax Australia stamp must be on the crankcase deck.

(xv) **Ignition unit:** The ignition unit must be DENSO digital ignition only, with no adjustment permitted or possible.

Ignition coils must have the following marks close to the outlet of the HT cable:

Cast in case	DENSO 129000
Spark plug cap	Must be NGK type TB05EMA.

No modification to any part of the ignition system and/or crankshaft to alter the ignition timing or rev limiter is permitted.

The ignition coil must have three pins at the terminal.

Battery make is free.

(xvi) **Carburettor:** The carburettor body, slide, needle, atomiser tube and atomiser insert (either specification 1 or specification 2 is permissible for seniors, but only specification 2 for Junior Max) and float arm must remain as originally supplied and may not be modified. No additions or machining, filing, drilling or polishing to these items, including the carburettor bore/throat, is permitted. No changes or adjustments can be made to the main jet or air bleed screw whilst the engine is running.

"VHSB34" must be cast in the housing of the carburettor.

"QD" or "QS" must be stamped in the housing of the carburettor.

Atomiser tube must be stamped with "266 FN".

Needle must be stamped with "K 54", "K 27" or "K 98" (note: others may be nominated in the future).

Slide must be marked "#40" only.

The size of any hole in any of the following is unregulated: main jet, needle and seat, pilot jet, pilot jet emulsion insert, choke jet. The position of the float/float arms and the weight of the floats are unregulated. All items (jets, needles etc) referred to in Rule (xv) must be present and operational.

All other settings in the carburettor are free.

(xvii) **Fuel pump:** Only one Mikuni DF44-211-D pulse fuel pump may be used. Fuel must be supplied directly from the pump to the carburettor by an uninterrupted fuel hose connection. The maximum length of the fuel line from the tank to the fuel pump is 1000mm, and from the fuel pump to the carburettor is 500mm.

(xviii) **Radiator:** One (1) only, genuine Rotax aluminium radiator is permitted.

Cooling area	Height:	290mm
	Width:	133mm
	Thickness:	32mm

Twelve (12) only water cores are permitted.

Placement of radiator is free subject to Superkarts - Technical Regulations Article 6.4. Only thermostats supplied for Rotax Max FR125 as OEM by BRP Rotax Gmbh may be used.

(xix) **Clutch:** The clutch must be of dry centrifugal type using genuine Rotax components unless nominated as a non-tech item. Whilst on level ground the kart (with driver) must start to move under its own power, when the engine speed reaches 3000rpm or less. The use of the Rotax clutch pin support plate is permitted.

(xx) **Intake silencer:** The intake silencer as supplied by Rotax for the FR125 Max must be fitted, with no modifications permitted.

The air filter must be in place, and be either fine or coarse type 030 filter. The silencer must be fitted with the inlet trumpets at the base of the unit .

It is permissible to drill a single hole up to 8mm in diameter in the lower part of the intake silencer (in the centre of the plastic injection mark). Either type airbox part ID 225 025 or 225 015 which incorporates an 8mm drain hole is permitted.

(xxi) **Exhaust system:** The exhaust system must be as supplied by Rotax for the FR125 Max and may not be modified except for (a) replacement of silencer absorption material, (b) addition of a single-sensor probe fitting.

Welding for the purposes of repair of cracks, holes or fitting of patches only is permitted. No welding which has the effect of altering the shape of the exhaust system is permitted. Endcap rivets must be replaced with bolts, capscrews etc, suitable for the purpose.

Junior class to use only Type B exhaust as supplied by ROTAX.

© Confederation of Australian Motor Sport Ltd. All use subject to Conditions of Use at *www.camsmanual.com.au*

10. WEIGHT

The minimum combined kart/driver weight for Superkart events shall be as follows:

Class			kg
~~85cc~~	~~Senior Gearbox~~		~~160~~
~~100cc~~	~~Junior Non-Gearbox~~		~~125~~
~~100cc~~	~~Senior Non-Gearbox~~		~~155~~
125cc	Non-Gearbox	- Light - Heavy *	~~160~~ **165** ~~180~~ **185**
125cc	Non-Gearbox Junior		~~145~~ **150**
125cc	Gearbox		180
250cc	Gearbox National		205
250cc	Gearbox International		215

** Maximum kart-only weight of ~~100kg~~* ***105kg (125 NGB class only)***

All ballast must be securely fastened to the **chassis or seat** ~~kart~~. The wearing of weight belts by the driver is forbidden.

All karts and drivers, fully equipped, must be weighed at the time of scrutineering.

Any kart/driver combination found to not meet the minimum weight will be excluded from that part of the meeting in which the irregularity was detected. The owner and driver will be reported to the stewards for further penalty.

11. GENERAL

(i) The construction of the vehicle shall be such as to satisfy the scrutineers as to its soundness and safety.

(ii) Timing transmitters when fitted shall be located with the whole of the unit and mounting behind the front axle centreline straight ahead position.

12. CHAMPIONSHIPS

12.1 For State and National Championships, only two engines per driver may be accepted at scrutineering for use during such championship meetings.

12.2 At every State and National Championship race meeting, all gearbox classes shall be limited to the use of eight tyres save for 250cc Gearbox International Class for which the number of tyres is not restricted. Except for treaded tyres used on a damp or wet track, up to eight dry weather (slick) tyres (four front and four rear) may be used for all races at each meeting.

These tyres will be coded and marked by scrutineers at the completion of the first heat. Included on the marking on the dry weather (slick) tyres will be the competition number of the relevant kart, the circuit, and/or any other marks deemed necessary by the Chief Scrutineer.

The use of unmarked, incorrectly marked dry weather (slick) tyres during any race is prohibited. No tyre marked for the use by one kart may be used on another kart during that race meeting.

The onus and responsibility lies with the Entrant to ensure that scrutineers mark their tyres in accordance with these regulations.

In the event of wet or damp conditions at the start or during any heat or race it is permitted to use unmarked wet weather tyres.

The Chief Scrutineer shall be the sole Judge of Fact in respect of decisions on tyres.

Any contravention of this article may result in the Entrant and/or Driver being referred to the Stewards of the Meeting for disciplinary action.

At every State and National Championship race meeting, 100cc and 125cc Non-Gearbox Class shall be limited to four tyres (two front and two rear). In the event of a declaration by Officials of "Wet Track" competitors must use wet weather tyres, until such time as the event may be declared "Dry Track". Non-Gearbox Classes are restricted to one set of four marked wet weather tyres, (two front and two rear) for the duration of the event.

The markings and procedures will be as per the above for gearbox classes, save that one front tyre and one rear tyre may be replaced, if a marked tyre has been damaged, at the sole discretion of the Scrutineer. No tyre replaced under this provision shall be used again at this race meeting.

Note: Where conflict between Article 12 of these regulations and the Australian Superkart Championship Sporting Regulations exists, the Sporting Regulations will take precedence.

© Confederation of Australian Motor Sport Ltd. All use subject to Conditions of Use at *www.camsmanual.com.au*