SPECIFICATIONS OF AUTOMOBILES

All vehicles in races and other speed events must comply with the General Requirements of Automobiles (see "General Requirements for Cars and Drivers" in the CAMS Manual of Motor Sport).

3rd Category – Touring Cars
Group 3D – Commodore Cup Technical Regulations (VR-VS)

ELIGIBILITY

Automobiles eligible are the Holden Commodore VR or VS, in four-door sedan configuration as fitted with a V8 engine and manual transmission, excluding models fitted with independent rear suspension.

Scrutineers and the Series Technical Commissioner may refer to both the workshop manual published by General Motor's Holden's specifically for the VR and VS Commodore and to the General Motors Holden's general catalogue in which all spare parts are listed.

Scrutineers and the Series Technical Commissioner may also carry out direct scrutiny by comparison of parts with a genuine Holden part obtained from a recognised Holden dealer.

ALL MODIFICATIONS, PREPARATION AND TUNING TECHNIQUES ARE STRICTLY PROHIBITED EXCEPT AS SPECIFICALLY AUTHORISED WITHIN THESE REGULATIONS.

Original equipment parts shall be used unless specifically approved otherwise within these regulations.

The attached drawings form part of these regulations and are numbered according to the regulation number to which they refer.

1. WEIGHTS AND DIMENSIONS

1.1 Maximum wheelbase measurement shall be **2745mm.**

1.2 Maximum track measurements shall be:

Front	1595mm
Rear	1510mm

1.3 Ballast may be used to achieve the racing weight requirement, and if used shall comply with CAMS requirements. All ballast must be mounted in the cockpit in the location of the production rear seat.

1.4 The racing weight at any time including the driver with helmet and wearing all apparel (eg. as at the end of a race or practice) shall be a minimum of **1,345kg** as recorded on the scales at the circuit on the days of the meeting.

2. BODYWORK

2.1 All body work including any subsequent repair of race day damage shall be to a tradesman-like standard and must permit the automobile to be presented in as near to original condition as possible.

2.2 It is permitted to remove the following components:

(a) External body trim or decoration.

(b) Battery tray, horn bracket, exhaust mounting brackets and rear seat retaining brackets.

2.3 Roll cages shall comply with the requirements of Schedule J (refer "General Requirements for Cars and Drivers" in the CAMS Manual of Motor Sport). The use of alternate materials and designs through the process of CAMS Homologation is permitted. The following additional requirements apply:

(a) Welding shall be the only approved method of attaching the roll cage to the body shell.

(b) No connections shall be made to the body shell outside the passenger compartment, except as follows:

(i) It is permitted for two roll-cage members to extend forward from each A-pillar bar, through the front firewall, to the front suspension towers or inner mudguards, provided that no such member extends:

- forward of a vertical plane through rearmost bolt hole in each front suspension tower, or
- inboard of vertical planes parallel to the centre-line of the automobile, and passing through the innermost bolt hole in each front suspension tower.

(ii) It is permitted to fit a single, straight lateral member forward of the front firewall joining two of the members permitted in (i) above, provided that no mechanical or bodywork modifications are required to allow its fitment.

2.4 The edges of mudguard panels may be folded back if they protrude inside the wheel housing. This procedure

© Confederation of Australian Motor Sport Ltd. All use subject to Conditions of Use at *www.camsmanual.com.au*

shall not alter the external shape of the mudguards.

2.5 Exterior appearance and dimensions shall be as originally manufactured. All lenses and lamps shall be of original type and appearance.

2.6 It is permitted to modify the bonnet by removing the additional strengthening from its underside, provided that no strengthening is removed from any point less than 125mm from the outer perimeter along the sides of the bonnet, 250mm from the outer perimeter along the front of the bonnet, 180mm from the outer perimeter along the rear of the bonnet, and that the outer skin is not modified.

2.7 The complete interior trim shall be removed with attention to the following points:

- The driver's seat shall be replaced with one in compliance with FIA 8855/98.
- The steering wheel may be replaced with one of a minimum 330mm diameter.
- The dashboard crash-pad may be replaced with the controlled unit supplied by the Commodore Racing Association of Australia Inc. Where the original crash-pad is not replaced by the controlled unit, the original unit shall remain.
- The window regulators and associated mechanisms may be removed from the rear doors, and the standard movable glass replaced with fixed panels of clear high-impact acrylic plastic or similar material. It is permitted to fit air-intake ducts within these replacement rear window panels.

2.8 The complete air-conditioning and heating systems may be removed.

2.9 A dead pedal or footrest may be fitted to the left of the clutch pedal. A floor covering of anti-slip style (eg, chequer plate) may be bolted to the driver's side floor of the passenger compartment. The accelerator, clutch and brake pedal pads are free.

2.10 The passenger compartment shall be effectively sealed against fire, fluid and fumes at the firewall, floor-pan and rear parcel shelf/bulkhead. C-pillar openings must also be sealed.

2.11 It is permitted to fully weld the front suspension towers to the wheel tubs. A brace may be welded in place between the rear shock absorber mounts as detailed in the attached drawing. No additional body strengthening may be added. It is permitted to fully weld the rear, upper shock absorber mounting cups to the body shell as detailed in the attached drawing. It is permitted to fully weld and/or bolt the rear upper control arm mounting brackets to the body shell. It is permitted to fully weld the removable section of the front-firewall to the body shell proper. It is permitted to modify the passenger side rear foot well solely for the purpose of providing exhaust system ground clearance, provided that the modifications are restricted to the floorpan only in the rear passenger floor, and that no part of the modified floor extends above a plane through the front edge of the rear seat mounting platform.

Drawing 2.10

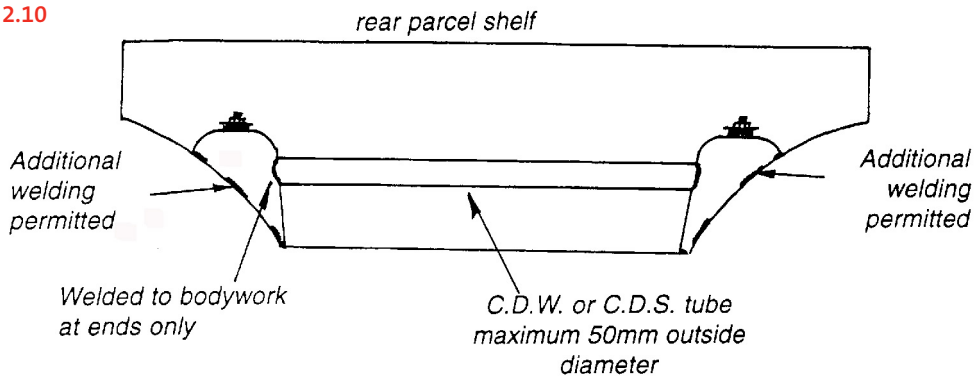

REAR SHOCK-ABSORBER TOWER BRACING

2.12 The following aerodynamic aids shall be fitted to the:

- combined front bumper bar, splitter and radiator grille, and
- rear boot lid spoiler.

These items shall be the controlled units as supplied by the Commodore Racing Association of Australia Inc.

The combined front bumper bar and splitter shall be fitted so that the gap to the mudguards, headlights or bonnet does not exceed 15mm at any point along its upper edge. The front bumper mounting brackets are free, save that the original combined bumper irons and mounting plate directly in front of the radiator, shall remain. The rear boot lid spoiler shall be fitted centred laterally on the boot lid, with its lower mounting plates meeting the front edge of the boot lid, adjacent to the rear windscreen, and with its mounting plates in contact with the boot lid along their full length.

2.13 The controlled front bumper bar and splitter shall be fitted with a flat timber under-tray of at least 6mm thickness, and which may be reinforced to provide additional rigidity on its upper surface only. The rearmost edge of the undertray must be straight. The leading edge of the undertray must locate in the ledge around the leading edge of the front splitter and must contact the ledge along its entire leading edge. No part of the undertray may extend beyond the perimeter of the controlled front bumper and splitter in plan view. It is permitted to cut a rectangular hole in the undertray provided that the opening is centred laterally, does

© Confederation of Australian Motor Sport Ltd. All use subject to Conditions of Use at www.camsmanual.com.au

not exceed 900mm in width and 300mm in depth, and does not extend more than 320mm forward of the rearmost edge of the under-tray.

3. SUSPENSION

3.1 Unless otherwise specified in these regulations, all suspension and steering components and mounting bolts shall be genuine Holden components, as originally fitted by the manufacturer to the Holden Commodore four-door sedan, VB through VH. The original VR-VS suspension mounting points shall be used.

3.2 All road springs (front and rear) shall be the controlled units as supplied by quadrant suspension as follows:

Front spring	part number: Q 1031
Rear spring	part number: QS 1118

Alternately the rear spring from the VB-VH part number: Q1380 may be used with 1½ turns removed thus leaving a finished spring of no less than 8½ turns.

3.3 The front strut inserts and rear shock absorbers shall be the controlled units as supplied by quadrant suspension as follows:

Front insert	part number: AK 50600
Rear shock absorber	part number: AK 52459

A minimum 2mm hole must be drilled through the upper retaining thread on all shock absorbers to enable tagging by officials.

3.4 Front strut and knuckle assemblies from VB to VN models shall be used. These must be altered to incorporate adjustable spring platforms as detailed in the attached drawing. The upper mounting bearing plate (or 'Top-Hat') shall be the controlled unit supplied by Noltec (part number: N440065). Strut/knuckle assemblies may be strengthened by the additional of metal.

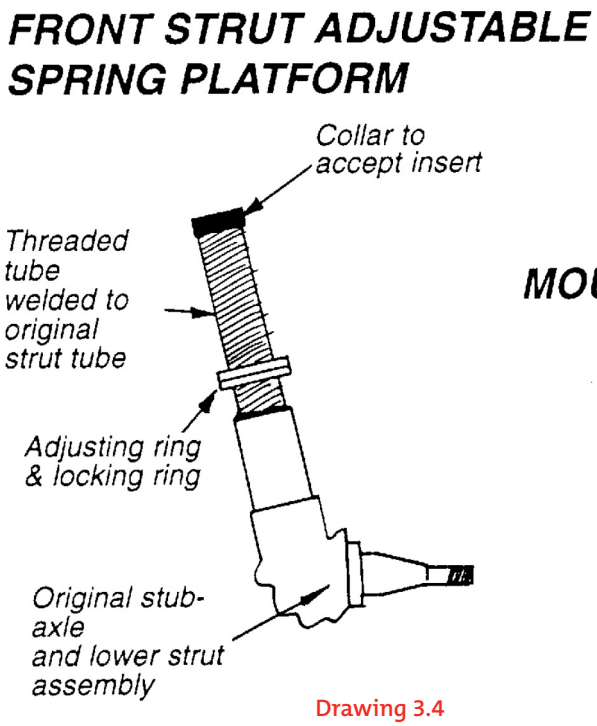

Drawing 3.4

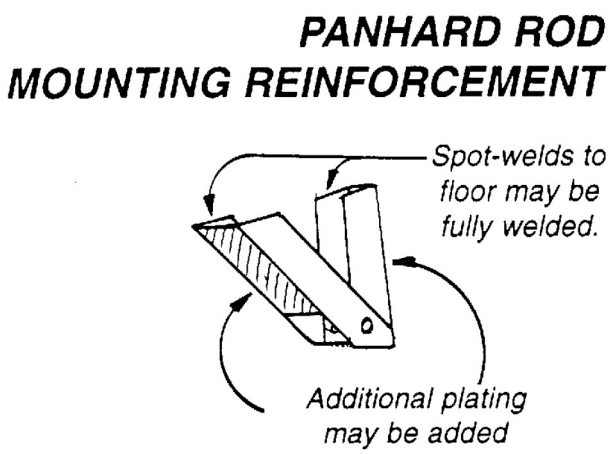

Drawing 3.5

3.5 The rear Panhard rod is free. The Panhard rod mounting bracket on the body shell may be strengthened in accordance with the attached drawing. It is permitted to extend the supporting plate downwards and fit an additional Panhard rod mounting pin 45mm below the standard pin but otherwise in an identical position to the standard pin. The Panhard rod may be connected to either pin. It is permitted to fit a brace over the end of the Panhard rod mounting pin/s on the rear axle housing and bolt the bracket to the driver's side lower-rear shock absorber mounting bracket.

3.6 The front radius rods (or Z-bars) shall be modified to allow for adjustment in their length only – to facilitate precise adjustment of front wheel castor. Modifications must be in accordance with the attached drawing.

continued...

© Confederation of Australian Motor Sport Ltd. All use subject to Conditions of Use at *www.camsmanual.com.au*

ADJUSTABLE RADIUS ROD

Drawing 3.6

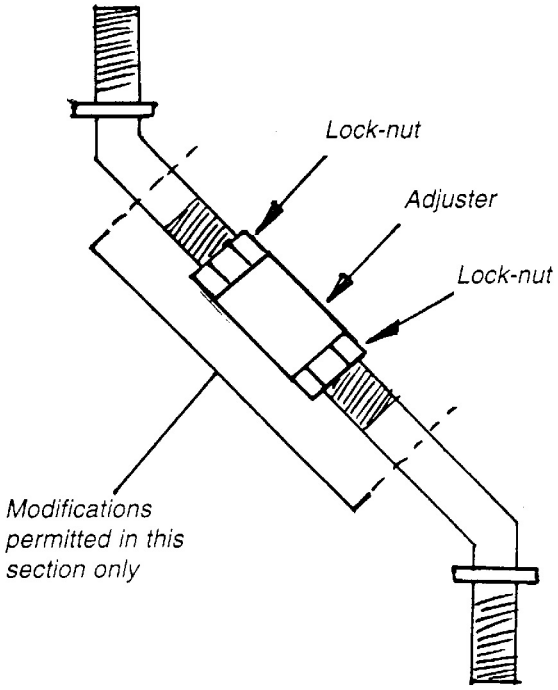

3.7 The automobile shall be fitted with power steering consisting of the following components:

(a) The steering rack shall be any standard Holden power steering rack as fitted to any Commodore model VP, VR or VS. Where the steering rack from a VR or VS Commodore is used, the steering tie rods must be replaced with the larger diameter units from any Commodore model VH through to VP.

(b) A power steering remote fluid reservoir is free.

(c) A power steering pump as fitted to VR model V6 Commodores (part number: 26044043). The pump pulley is free. The power steering belt shall remain fitted and operating at all times.

(d) Hoses of suitable quality securely retained away from any engine or body components likely to damage them.

(e) The power steering pump mounting bracket is free.

(f) It is permitted to fit a single power steering fluid cooler within the engine compartment only, provided that no part of the cooler extends below a plane through the top of the engine harmonic balancer.

3.8 The front lower control arm inner bush is free and may be replaced by a concentric spherical bearing. All other rubber suspension bushes may be replaced with urethane bushes of otherwise identical configuration.

3.9 It is permitted to install a single solid spacer above each rear spring for the purpose of ride height adjustment. Spacer thickness must not exceed 35.0mm.

3.10 **Anti-roll bars:** The front anti-roll bar shall be one of the following from the Commodore model shown in brackets after its GMH part number:

22mm diameter	part number: 92036246 (VB-VH)
24mm diameter	part number: 92036245 (VB-VH)
26mm diameter	part number: 92015589 (VB-VH)
26mm diameter	part number: 92041501 (VB-VH)

The rear anti-roll bar shall be one of the following from the Commodore model shown in brackets after its GMH part number:

14mm diameter	part number: 92024755 (VB-VH)
16mm diameter	part number: 92024756 (VB-VH)
19mm diameter	part number: 92036388 (VR-VS)

It is prohibited to disconnect either anti-roll bar from its attachments.

© Confederation of Australian Motor Sport Ltd. All use subject to Conditions of Use at *www.camsmanual.com.au*

3.11 Each end of the front anti-roll bar shall be connected by a GMH genuine drop-link assembly (GMH part number: 89070318) to a front anti-roll bar mounting bracket welded to each front strut tube in accordance with the attached drawing. The bracket shall be the controlled unit as supplied by the Commodore Racing Association of Australia Inc.

Drawing 3.11

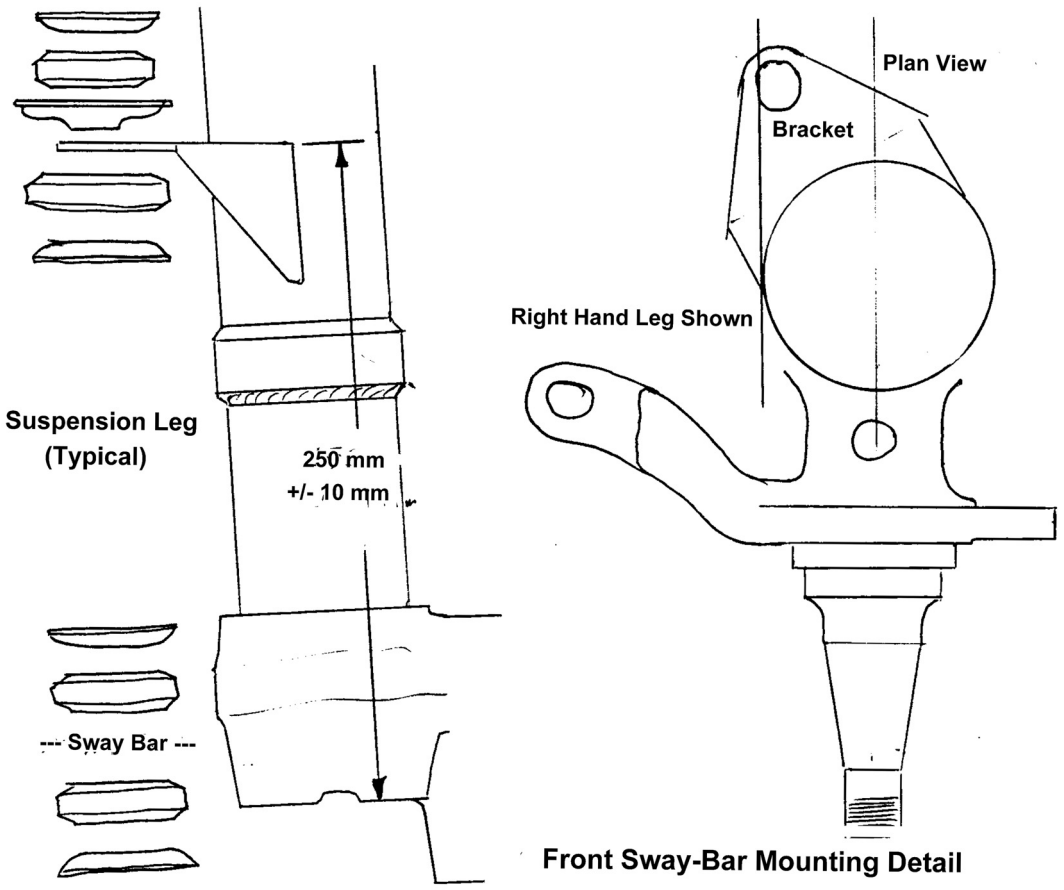

3.12 The standard steering tie rod ends must be replaced by the controlled adjuster tubes, locking nuts, rod ends, Grade 8 rod end attaching nuts and bolts and rod end spacers as supplied by the Commodore Racing Association of Australia Inc. These components shall be assembled in accordance with the attached drawing.

Drawing 3.12

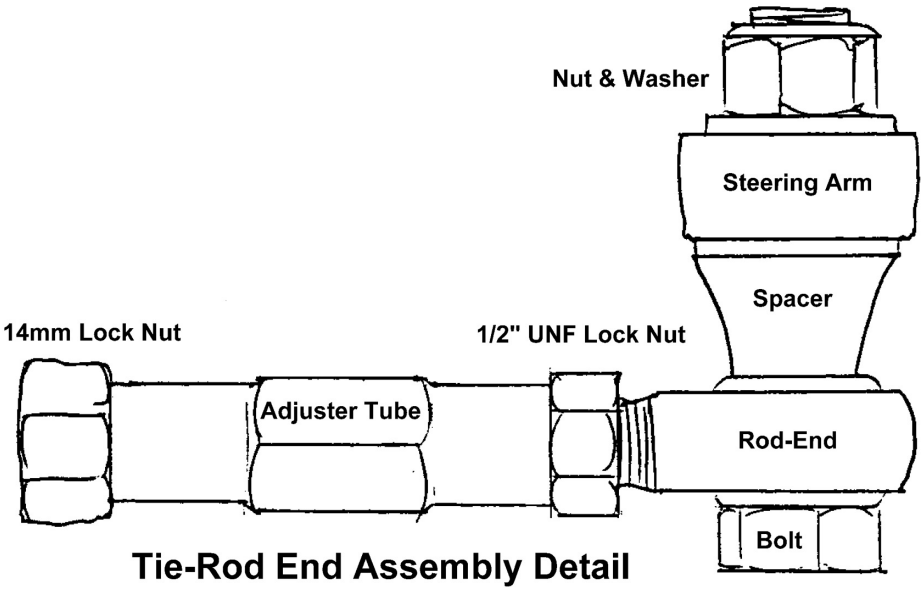

... continued

© Confederation of Australian Motor Sport Ltd. All use subject to Conditions of Use at *www.camsmanual.com.au*

3.13 It is permitted to relocate each inner pivot of the front lower control arms to a point up to 25mm further outboard of the original hole. The centre line of the new hole shall be no lower than the centre of the original hole, and no higher than 63mm below the underside of the top plate of the front suspension cross-member as per the attached drawing. The only approved method for relocating this pivot point is by drilling new holes in the front suspension cross-member.

Drawing 3.13

REAR AXLE - FULLY FLOATING HUBS CROSS SECTION

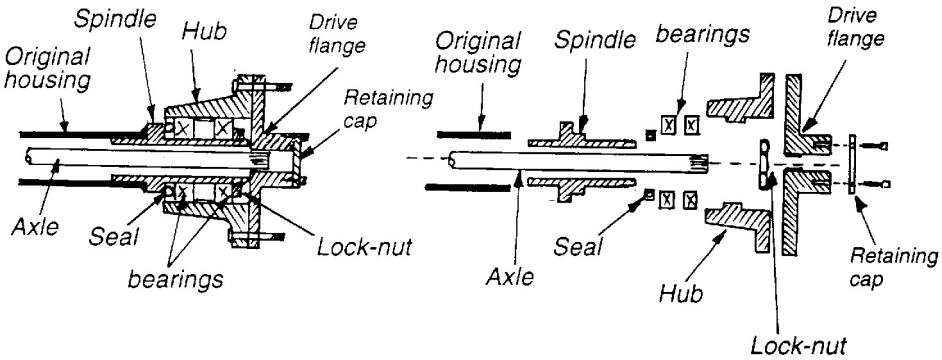

ASSEMBLED VIEW OF HUB (TYPICAL) **EXPLODED VIEW OF HUB (TYPICAL)**

3.14 It is permitted to fit a steel spacer and adjusting shims over each front stub axle, between the inner and outer wheel bearings for the purpose of adjusting wheel bearing pre-load.

3.15 It is permitted to increase rear shock absorber travel by modifying the lower-rear shock absorber mounting brackets by removing them from the rear axle housing, and re-welding them inverted, but otherwise in the same position.

3.16 It is permitted to fit a spacer between the steering column and its rearmost mounting to the dashboard support brackets for the purpose of adjusting the angle of the column downward and laterally. The adjusted position shall not exceed 50mm vertically or 40mm horizontally from the original position.

3.17 (a) It is preferable that an original VR-VS steering column be retained. The lock cylinder bearing may be replaced or reinforced to provide extra steering shaft stability. The indicator mechanism may be removed.

(b) Alternatively, a manufactured steering rod/tube may be used provided that an operational slip joint is incorporated in the lower section of the assembly. Any welding must be crack tested and a certificate must be made available for any scrutineering and/or safety checks at any time.

3.18 Each rear lower control arm may be sourced from any model Commodore VB-VS provided that the centre-to-centre length is 541 ± 1mm. Alternatively a replacement lower control arm, Nolathane part number 46904, may be used.

4. BRAKES

4.1 Brake linings are free, as is their method of attachment provided the contact surface area is not increased from the contact surface area of the standard brake pads in use.

4.2 Disc rotor protection plates may be modified, replaced or removed.

4.3 The master cylinder and brake booster shall be a standard Holden unit as fitted to any model Commodore VB through VS. Servo assistance may be disconnected.

4.4 Flexible brake hoses may be replaced with others of aeronautic quality.

4.5 It is permitted to add one flexible pipe to carry air to the brakes of each front wheel. All air must be supplied through the controlled air-duct in the front air dam. Fittings at the exhaust end of the pipe are free, subject to no modifications being made to other components to allow their fitment.

4.6 The hand brake and all associated components, linkages, brackets and cables shall be removed.

4.7 **Front brakes:** Front brake rotors shall be the ventilated rotors as supplied by Rotors and Drums Australia (part number: RDA 19). Front brake calipers shall be Twin-piston sliding calipers (PBR part number: B861-010 [LHS] and B861-009 [RHS]). Front brake caliper mounting brackets are free, provided that the caliper is mounted in its original position in relation to the rotor. Front brake caliper mounting brackets shall be constructed from steel material only. Only one caliper per rotor is permitted.

4.8 **Rear brakes:** Rear rotors shall be ventilated rotors as supplied by Rotors and Drums Australia (part number: RDA 20). Rear brake calipers shall be original Commodore FRONT calipers (PBR part numbers B843-100 [RHS] and B843-101 [LHS] or PBR part numbers VS21853 [RHS] and VS21854 [LHS] – if the latter are used it is permitted to remove the minimum amount of material from the caliper castings to provide clearance from the caliper mounting brackets). Only one caliper per rotor is permitted. Rear brake caliper mounting brackets are free, provided that the caliper is mounted in its original position in relation to the rotor. It is permitted to

© Confederation of Australian Motor Sport Ltd. All use subject to Conditions of Use at *www.camsmanual.com.au*

relocate the rear caliper brake line ports for the purpose of shock absorber clearance.

4.9 A proportioning valve may be fitted in the rear brake line. This valve may be mounted within reach of the driver whilst racing. The rear brake line may be redirected to accomplish this.

4.10 The rear brake pressure limiting system in the brake master cylinder may be modified to achieve desired rear brake line pressure.

5. WHEELS AND TYRES

5.1 All automobiles must be fitted with ROH Reflex Racing 16" x 8" wheels.

5.2 It is permitted to fit a spacer of no more than 10mm thickness between each rear wheel and its respective rear disc rotor for the sole purpose of adjusting the rear track measurement.

5.3 All tyres shall be Dunlop Formula R D01J – size 225/50 16 as supplied by Dunlop Motorsport.

6. ENGINE

6.1 It is permitted to use any Holden 253 cubic inch, eight-cylinder engine block.

6.2 Pistons shall be ACL "Duralite" RY 4200 or ACL "Commodore Cup" RA9119. For the sole purpose of achieving equal piston deck-heights, it is permitted to machine a minimal amount of material from the surface of any piston provided that a dimension of at least 5.00mm is maintained between the upper edge of the top ring groove and the piston deck surface.

6.3 **Cylinder Block:** The cylinder block may be over-bored by a maximum of 1.0mm. The main bearing caps may be machined and the main journals may be align bored/honed provided that the crankshaft centreline remains within 0.5mm of the standard position. The cylinder head mounting faces may be machined save that the mounting faces must remain perpendicular to the cylinder bore centrelines. It is permitted to remove the jagged castings from the four slots in area above the cam shaft and also from the square hole below the distributor, both within the valley of the block. Cylinder bores may be bevelled to the head gasket provided the bevelling remains within the boundaries of a standard ACL Race Series head gasket specifically for a Holden 253 engine.

6.4 Cylinder heads shall be either of the controlled cast iron or aluminium units as supplied by Perfectune Engineering as follows:

(a) Cast iron cylinder heads shall be the controlled units as supplied by Perfectune Engineering (part number: HT 2530-CC) as the Commodore Racing Association Controlled Cylinder Head, fitted with dual valve springs (part number: YT 4337) and valve retainers (part number: YT 1552). The inlet and exhaust valves shall be as supplied with the cylinder heads. Use of alternative valves is permitted provided that they are of identical size and profile and made of the same material as the original YT valves. K-Line type valve guide inserts may be fitted provided that this process does not result in the relocation of the valve guide. It is permitted to fit shims under each valve spring for the purpose of adjusting valve seat pressure. No modifications may be made to any of the components prescribed above, save for the machining of the cylinder block surface of the cylinder head provided that the capacity of each combustion chamber shall be not less than 54.0cm^3, when fitted with the spark plug used while racing. Alternatively, cylinder heads may be fitted with Iskenderian single valve springs (part number: 235-D) and valve retainers (part number: YT 1543). Valve collets are free. It is permitted to reclaim worn or damaged valve seats by the fitment of proprietary ferrous valve seat inserts provided that the reclaimed seat conforms to the dimensions noted on the attached drawing – minimum seat width (inlet and exhaust) shall be 1.0mm.

(b) Aluminium cylinder heads shall be the controlled units as supplied by Perfectune Engineering (part number: ABHA 308-1CC – Cylinder Head assembly) as the Commodore Racing Association Controlled Cylinder Head, fitted with dual valve springs (part number: YT 4337) and valve retainers (part number: YT 1552). The inlet valves shall be Perfectune Engineering part number ABH 1912 and exhaust valves shall be part number ABH 1913. It is permitted to fit shims under each valve spring for the purpose of adjusting valve seat pressure. No modifications may be made to any of the components prescribed above, save for the machining of the cylinder block surface of the cylinder head provided that the capacity of each combustion chamber shall be not less than 54.0cm^3, when fitted with the spark plug used while racing. Alternatively, cylinder heads may be fitted with Iskenderian single valve springs (part number: 235-D) and valve retainers (part number: YT 1543). Valve collets are free. It is permitted to reclaim worn or damaged valve seats by the fitment of proprietary ferrous valve seat inserts provided that the reclaimed seat conforms to the dimensions noted on the attached drawing – minimum seat width (inlet and exhaust) shall be 1.0mm. Use of ARP cylinder head bolts and washers or Yella Terra ABH 308HB head bolt set is permitted.

... continued

© Confederation of Australian Motor Sport Ltd. All use subject to Conditions of Use at *www.camsmanual.com.au*

Drawing 6.4

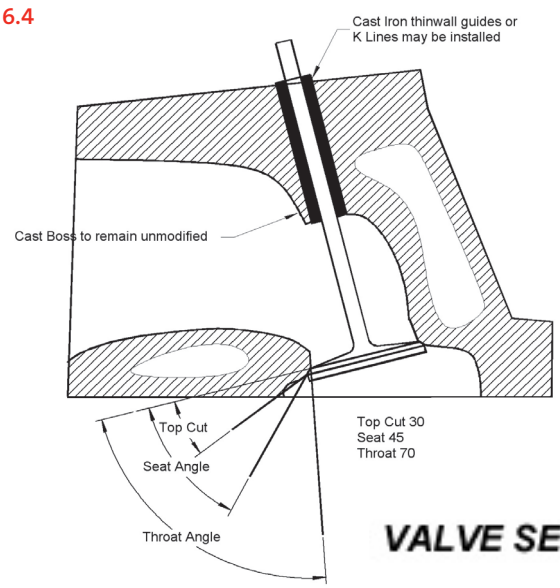

VALVE SEAT AND THROAT DETAIL

6.5 All engine assembly bolts and studs shall be original design specification, with the exception of connecting rod assembly bolts, and the cylinder head bolts as per 6.4(b), which may be replaced with non-genuine units of identical size.

6.6 The camshaft shall be the "Commodore Racing" camshaft (profile number: 1326), as supplied by Crow Cams. Camshaft installation in relation to TDC is free.

6.7 Valve lifters are free subject to them having a maximum external diameter of 21.40mm and being of a "flat-face" type.

6.8 Timing chains and sprockets are free provided that a chain and sprocket drive is used. The number of links in the timing chain shall be 62. Either single- or double-row chain may be used.

6.9 Crankshaft and connecting rods. The crankshaft shall be the standard Holden 253ci V8 crankshaft. It is permitted to heat-treat or chemically treat the crankshaft and all journals may be reduced in diameter by a maximum of 0.75mm. The connecting rods shall be original GMH 253/308 units (part number: 7435450), GMH VN/VS five litre units (part number: 92032405) or the controlled units supplied by SCAT® (part number: 230856272124P). It is permitted to shot peen the connecting rods.

Note: It is anticipated that rods part number 7435450 will not be allowed after the conclusion of the 2009 season.

6.10 Push rods shall be either original Holden red motor V8 units or 2.7mm longer pushrods (part number: PR5880) as supplied by Crow Cams.

6.11 Rockers shall be needle-type roller rockers as supplied by Perfectune Engineering (part number: YT 5033).

6.12 **Lubrication:** the oil pan may be modified and its capacity increased, provided that no part of the oil pan protrudes below the plane of the base of the standard engine mounting cross member. The oil pump is free subject to it being mechanically driven and mounted in its original position. The oil pump pick-up is free. It is permitted to fit an engine oil cooler kit, provided that oil is drawn and returned via an adapter fitted between the filter face of the oil pump and the oil filter. Location of the cooler is free provided it cannot be easily damaged under normal operating conditions. All associated oil lines must be braided line with high-pressure threaded fittings (not bayonet clamps).

6.13 The PCV valve and hose may be removed provided that the resultant open vacuum outlet has been blanked. The engine crankcase breather, if discharging to the atmosphere, must do so via a catch tank of at least three litres capacity. The crankcase shall vent through the rocker cover only, via the standard unmodified PCV system, or via plumbing direct to a catch tank.

6.14 Emission control equipment may be disconnected or removed.

6.15 **Flywheel:** dowelling of the flywheel to the crankshaft is permitted. The flywheel shall be any one of the three controlled units as supplied by Perfectune Engineering:

- part number YT 9903 which may be machined on the clutch face only provided that the minimum weight exceeds 12.0kg, or
- part number YT9903RPM (early model clutch) which may be machined on the clutch face only provided that the minimum weight exceeds 7.0kg or
- part number YT 9903CC (late model clutch) which may be machined on the clutch face only provided that the minimum weight exceeds 7.0 kg.

6.16 It is permitted to balance by normal automotive engineering methods, all rotating and reciprocating components of the engine, provided that only the minimum amount of material is removed for this purpose and that minimum weights are respected.

6.17 The exhaust system is free from the exit of the cylinder head.

6.18 **Cooling:** A replacement water radiator is permitted subject to its fitment requiring no modifications other than the drilling of two locating holes in the panel immediately below the radiator, and to it otherwise using

© Confederation of Australian Motor Sport Ltd. All use subject to Conditions of Use at *www.camsmanual.com.au*

the original mounting points. The radiator core must in all aspects retain the original width and height of the original core, and be a maximum of 100mm in thickness. It is permitted to remove the original radiator fan and spacer and fan shroud. Where the original fan is removed a replacement electric unit may be fitted. Heater hoses may be disconnected or removed. It is permitted to angle the top of the water radiator back solely through the use of offset upper mounting pins, provided that the resultant gap between the top of the radiator and the radiator support panel does not exceed 150mm. Fitment of a water filter in the top radiator hose is permitted subject to this being no larger in outside diameter than the hose itself. The installation of additional ducting and or panelling to improve the delivery of air to the radiator is permitted, provided that all additional material is contained within the bounds of the front bumper/spoiler and that no part of the additional material extends rearward of the front face of the radiator.

6.19 The engine thermostat may be removed or it may be replaced with a restrictor plate and the thermostat housing is free.

6.20 It is permitted to fit the inlet manifold with a pair of water by-pass hoses not exceeding 12mm external diameter linking the rear water jacket of each cylinder head with the front of the corresponding cylinder head. The only modifications permitted when installing these hoses shall be the drilling and tapping of four holes not exceeding 12mm diameter through the cylinder head gasket faces of the inlet manifold at the point where the manifold covers the water jacket openings at the front and rear of each cylinder head.

7. INDUCTION SYSTEM

7.1 Carburettor must be a Holley four-barrel downdraught carburettor - 465 cfm. Model number 1848 or model number 81570.

7.2 The prescribed carburettor must not be modified save for the following components:

(a) Primary feed holes located beneath the seat of the power valve may be enlarged. These holes must remain circular and centred around the same axis as the original hole.

(b) The seat of the secondary diaphragm check ball may be modified by removal of metal from the seat to provide an air bleed below the ball.

(c) Any Holley secondary diaphragm spring may be used.

(d) Enlargement of the fuel metering holes in the secondary metering plate is permitted.

(e) It is permitted to replace the secondary metering plate with a secondary metering block kit (Holley part number: HLY-34-6).

(f) The primary jets are free only as to size, provided that they are of Holley pattern and dimension.

(g) The power valve may be replaced but shall remain of original Holley design.

(h) The choke butterfly and associated linkages may be removed. It is compulsory to plug any vacuum holes left open by the removal of the choke butterfly

(i) It is permitted to replace both carburettor bowls and floats with the controlled centre-pivot bowl and float kit as supplied by the Commodore Racing Association. Holley part numbers are: primary bowl 34-25, secondary bowl 34-27 and floats RR 116-3.

7.4 The inlet manifold shall be Edelbrock 'Performer', model number 2194. The inlet manifold may be machined only on the machined surfaces, which are in contact with the cylinder head or cylinder block. Such machining shall be limited to the minimum amount to effect proper fitment. The thickness of gaskets and any spacers between the inlet manifold and the carburettor shall not exceed 3mm in total. These gaskets and spacers shall not protrude more than 20mm laterally in any direction beyond a square drawn through the centre of the four bolts, which mount the carburettor to the inlet manifold.

7.5 **Fuel pump and fuel lines:** The fuel pump may be either one mechanical pump or one electric pump. Should a mechanical pump be fitted it must be of genuine (or non-genuine replacement) Holden V8 type and mounted in its original position on the engine. Should an electric fuel pump be fitted it must be a Holley 'Blue' or Holley 'Black' electric pump complete with fuel pressure regulator. Electric pumps must be mounted securely within the boot compartment of the automobile. In such cases the original mechanical pump must be removed and the resulting opening in the engine timing case must be covered with a metal plate, held in place by two bolts. Electric pumps must be wired to their electrical supply via a switch, which must stop the operation of the pump should the engine oil pressure drop to zero. The fuel line is free provided that it is a single line of less than 20mm outside diameter including any insulation. The route taken by the fuel line from the boot compartment to the carburettor is free, provided that it does not pass through the driver's compartment, and must meet CAMS requirements as to material and its fitment to the body shell. A maximum of two fuel filters may be fitted provided that these filters are located in either the boot compartment or engine compartment, that the combined fuel capacity of these filters does not exceed one litre, and that their only function is to remove foreign particles from the fuel. No return lines from the pressure regulator or the carburettor are permitted.

7.6 The air cleaner is free subject to the following restrictions on its design:

- No part of the air cleaner may extend forward of the radiator support panel, or below a plane through the centre line of the engine crankshaft.
- All air must be filtered through the same element.
- The air filter must act as a flame retardant in the event of a flame being emitted from the carburettor.

© Confederation of Australian Motor Sport Ltd. All use subject to Conditions of Use at *www.camsmanual.com.au*

8. IGNITION SYSTEM

8.1 The ignition coil is free. Only one ignition coil may be used. The location of the ignition coil is free, provided that it is located within the engine bay.

8.2 The distributor must be a single breaker point type, fitted as standard to a Holden V8 red motor or with BOSCH electronic type, with mechanical advance, as fitted to either VL model Holden Commodore V8 (part number: 92023157) or to VH and VK model Holden Commodore V8 (part number: 92027536) – both of which must also be fitted with a Bosch electronic ignition module – part number: 9222067021. The mechanical advance curve may be modified and the vacuum advance mechanism may be disconnected or removed. The distributor drive gear is free as to material only and must otherwise be identical to the standard gear supplied with the distributor.

8.3 Spark plug high tension leads and spark plugs are free.

8.4 The engine must be fitted with a functioning engine speed limiter as supplied by the Commodore Racing Association, mounted in the engine bay. This must be wired to effectively limit engine rpm to 7,000 revolutions per minute. The wiring loom between the coil and the rev limiter must be separate and visible to permit scrutiny at all times. No other control system may interpose in the ignition system apart from a pulse supply to the tacho. For the avoidance of doubt, this prohibits the use of "shift cut" systems howsoever conceived.

9. ELECTRICAL SYSTEM

9.1 The location of the battery is free except that it shall not be located in the passenger compartment.

9.2 The electrical wiring of the automobile is free, subject to the following systems (as a minimum) functioning as originally designed:

headlamps and tail lamps	alternator circuit
brake lamps	starter motor circuit
windscreen wipers	ignition circuit

9.3 The alternator pulley is free subject to its diameter not exceeding 100mm. The alternator mounting brackets are also free subject to a belt of original VB to VH 4.2 V8 dimension being used.

9.4 Any Holden 12-volt starter motor may be used. It must be capable of starting the engine at any time during any race or qualifying session.

9.5 The use of systems to monitor and log automobile performance data is permitted, but they must be configured so as to have no reactive control over automobile performance. The only permitted input sensors are:

G-Force – lateral & longitudinal	oil temperature
oil pressure	diff temperature
gearbox temperature	water temperature
engine rpm (pickup must not be connected to the ignition system)	brake pedal position (digital input only)
front brake pressure	rear brake pressure
accelerator position (analogue input permitted)	vehicle speed (via one front wheel sensor)
mixture (Lambda probe) x2	lap trigger beacon
steering angle	

The only output function authorised is a shift light.

10. TRANSMISSION

10.1 **Clutch:** The clutch driven plate is free. Clutch actuation must be by cable as originally installed. The clutch pressure-plate may be replaced with the larger unit originally fitted to VN and VP model V8 Commodores, or a non-genuine replacement unit for this pressure-plate which meets the requirements of regulation 12.2.

10.2 The gearbox main casing and side plate must be a Richmond Super T-10 4-speed type. The gearbox ratio set must be as listed in regulation 10.3. The bell housing must be a Hadfield® Bell-housing model number BH 87. The gearshift lever and its associated linkages are free provided that the shift mechanism remains external, unassisted and retains an H-pattern selection. When fitting the gearbox it is permitted to modify the passenger's side of the gearbox floor tunnel solely for the purpose of providing clearance for the gearshift mechanism and such modifications shall serve no other purpose. The gearbox may be fitted with a mechanical lockout to prevent the accidental selection of reverse gear.

... continued

© Confederation of Australian Motor Sport Ltd. All use subject to Conditions of Use at *www.camsmanual.com.au*

10.3 Gearbox ratios and tooth count shall be as follows:

Gear	Ratio	Tooth Count
1st gear	2.64:1	18/34
2nd gear	1.61:1	21/24
3rd gear	1.23:1	24/21
4th gear	1.00:1	Direct
Reverse	2.64:1	Not Applicable
Constant Mesh		20/28

10.4 The rear gearbox mount and cross-member are free.

10.5 The rear axle assembly may be any genuine GMH unit fitted as standard to any Commodore sedan model, VB, VC, VH, VK or VL. The final drive ratio must be either 3.08:1, 3.23:1, 3.45:1, 3.73:1 or 3.70:1 for Borg Warner assemblies or 3.08, 3.36 or 3.55 for GM Salisbury assemblies. Sporting Regulations will specify which ratio or ratios are permitted to be used at particular circuits. If not otherwise specified in the Sporting Regulations or in the Supplementary Regulations for a particular event, any of the three final drive ratios specified above may be used.

10.6 The rear axle shall incorporate no differential action. It is permitted to fit a spool in place of the original differential unit, or the original differential unit may be modified to de-activate the differential action.

10.7 The rear axle must be altered to incorporate a two-bearing, fully-floating hub system in accordance with the attached drawing. All driven components including (but not limited to) axles, hubs and spools must be constructed of ferrous materials. It is permitted to fully weld the axle tubes to the centre crown wheel housing. At no time may the camber on either rear wheel exceed 1° negative. Rear toe settings are free.

10.8 The tail-shaft is free subject to it being of two-piece steel design and driving through a centre constant velocity joint. The tail-shaft must mount to the original mounting points as provided by the manufacturer. Safety hoops in accordance with CAMS Schedule B (refer "General Requirements for Cars and Drivers") must be fitted. The front tail-shaft yoke is free.

11. FUEL

11.1 Only petrol as defined by CAMS is permitted.

11.2 The original fuel tank must be replaced by the "control" foam-filled bladder tank as supplied by either AFBS Pty Ltd or the Commodore Racing Association of Australia Inc. This unit must be fitted in accordance with the attached drawing.

11.3 A breather hose of at least 6mm internal diameter must be connected to the fitting provided on the "control" fuel tank unit. This hose must exit the automobile outside the boot compartment.

11.4 An effective spill tray with drain hose must be fitted to the fuel tank filler neck. The drain hose must exit outside the boot compartment.

12. NON-GENUINE PARTS

12.1 The use of non-genuine replacement parts is permitted. The parts must be standard replacement parts in terms of configuration and functional dimensions and must be of similar material, and must not result in any unauthorised modifications to any other components. Where a specialist tool is required for disassembly of components utilising non genuine parts, such is to be made available by the competitor on demand.

12.2 The provisions in relation to the use of non-genuine parts are applicable only to the following items:

gaskets & seals	bearings	seals	water pump
spark plugs & leads	ignition components	drive belt/s	voltage regulator
water hoses and clamps	ball joints	universal joints	window glass
filters	bodywork panels	fuel pump	clutch pressure plate
clutch throw-out bearing	engine mounts	clutch cable	accelerator cable

... continued

© Confederation of Australian Motor Sport Ltd. All use subject to Conditions of Use at *www.camsmanual.com.au*

12.3 The following parts may be from any source provided that their use does not result in unauthorised modifications to any other component:

lamps	auxiliary gauges	rocker covers
oil filler caps	washer bottles	gearshift lever & pivot housing
thermostat	battery clamp & leads	battery
front & rear windscreen rubbers	harmonic balancer & crankshaft pulley	piston rings
auxiliary bonnet fasteners	fasteners - nuts, bolts, screws etc*	radiator overflow / expansion reservoir
valve-stem seals		

Note: * (excluding all engine transmission, drive train assembly and suspension mounting nuts and bolts which shall remain original unless specifically authorised elsewhere in these regulations.)

© Confederation of Australian Motor Sport Ltd. All use subject to Conditions of Use at *www.camsmanual.com.au*