# RALLY / ROAD

## Cross Country Rally Technical Regulations

### PREAMBLE

The vehicle regulations for Cross Country Rallies will provide for a variety of suitable vehicles, at a variety of different modification levels, ranging from relatively standard to highly modified. These regulations are intended to provide a uniform set of technical regulations which shall be utilised by all national or lower level Cross Country Rally events conducted under a CAMS Permit.

Organisers are able to utilise selected groups from the following regulations. The groups being catered for will be outlined in the supplementary regulations for each event. No change to these regulations is permitted, unless it has the ultimate effect of reducing the permitted level of modification in a given Group. Classes may be created within a group (eg, "Ute class"), provided that they comply with the Group Regulations and are outlined in the supplementary regulations.

In some events it may be possible for vehicles complying with CAMS Off Road Regulations to participate, which will be outlined in the supplementary regulations of the event. In such cases, each vehicle must be subject of the relevant civil approvals (registration, temporary permit etc) to allow that vehicle to drive on public roads, and must be subject of appropriate third party insurance. Where conflict arises, the safety regulations for Cross Country Rallies will take precedence over those for off road, unless specifically outlined in these regulations.

## Compulsory and Recommended Equipment - All Competitors and Vehicles

### I. COMPULSORY EQUIPMENT

All vehicles must comply with Schedule R of the current CAMS Manual of Motor Sport (refer "General Requirements for Cars and Drivers") and the following.

Notwithstanding, where CAMS Off Road specifications are applicable, and are in conflict with these requirements (other than Schedule R), CAMS Off Road specifications will be accepted:

**1.1** Seat belts must be fitted for all crew members and must be worn at all times when the vehicle is in motion. Failure by any crew member to do so may lead to exclusion.

Seat belts must comply with the provisions of Schedule I for rallies (refer "General Requirements for Cars and Drivers"). The mounting points, if not standard as supplied with the vehicle, must be to the satisfaction of the Chief Scrutineer.

**1.2** A roll over protection structure (ROPS), complying with Schedule J (refer "General Requirements for Cars and Drivers") must be fitted.

Protective padding must be fitted to the ROPS in accordance with the provisions of Schedule J (see "General Requirements for Cars and Drivers").

Utility (pick-up) vehicles may replace the rear window (glass) with a suitable material; ie, 1.5 mm thick or clear material 3mm thick, which may be modified to allow the passing through of the rear braces for the ROPS.

**1.3** One or more fire extinguisher/s complying with Australian Standard 1841 (save that AS1841.3 extinguishers are not permitted) and of at least 2.0kg capacity (depending upon type of extinguishant) must be securely mounted within the passenger compartment and be readily accessible to all crew members.

Refer Schedule R for full details of required fire extinguishers, including maintenance provisions (see "General Requirements for Cars and Drivers").

**1.4** Four triangular warning signs with sides of at least 300mm in length must be carried in the vehicle at the start of the event, for use when the vehicle is immobilised. When not in use, there must always be no less than two such triangles available in each vehicle.

**1.5** A laminated glass windscreen must be fitted to all vehicles (unless not required by relevant Off Road technical regulations).

**1.6** External rear view mirrors must be fitted to both sides of the vehicle, each with a reflective surface of at least 50 square centimetres. Subject to road traffic regulations, for safety reasons it will be permitted to fit different and/or more robust external mirrors, but with only minimal alterations to the coachwork.

**1.7** Mudflaps must be fitted behind each driving wheel. Standard mudflaps as originally fitted to the vehicle may be replaced or modified. If replaced, the mud flap must be of stout rubber or similar material at least 5mm thick, so as to mask the tyre completely when viewed from the rear of the vehicle. The lower edges of the mudflap must be not less than 50mm and no more that 100mm of the ground when the vehicle is stationery



© Confederation of Australian Motor Sport Ltd. All use subject to Conditions of Use at *www.camsmanual.com.au*

in a ready-to-start (laden) condition. Hinged mudflaps are not permitted.

**1.8** Towing points, which must be readily accessible and robust, must be fitted to front and rear of vehicle. Refer article 6 of Schedule C (see "General Requirements for Cars and Drivers") for guidelines.

**1.9** A strong safety partition must be securely fitted behind the rearmost crew member in order to prevent any loose objects from moving forward into the seating area The material used for the safety partition must not allow the passage of articles of a diameter of more than 40mm. Alternatively, a **solid** partition may be used, manufactured from steel, aluminium, or approved solid plastic/polycarbonate, in which case it must be non-inflammable and non-toxic. Nylon or other mesh netting will not be approved. For utility-type vehicles, a similar safety partition must be fitted externally to the cabin, and designed that it completely masks the rear window from objects being thrown forward from the tray area.

**1.10** A 40 channel UHF radio (477 MHz) with duplex function and 60-second time-out timer. At pre-event scrutineering each vehicle's radio will be checked and tested for correct performance (including the 60-second time-out timer). Failure to conform could lead to the vehicle failing scrutineering.

During the event, radio installation and performance checks may be made by the organisers at overnight bivouacs, and radios which are not operating correctly will be required to be repaired or replaced before the vehicle can start the next Leg, except at the discretion of the Clerk of Course.

**1.11** Two red or amber dust lights must be fitted to the rear of the vehicle at a minimum height of 1.5 metres above the ground. Each must be of at least 21 watts minimum power and maximum 55 watts, and each must have a lens area of at least 60 sq. cm. They must be attached to the left and right rear of the vehicle, or for utilities, on or near the upper angles of the rear part of the cabin. These lights must be constantly switched on during the running of all selective sections, and are recommended to be on during unsealed road sections.

**1.12** **Audible warning device:** Each vehicle must be equipped with a loud variable tone audible warning device, over and above that supplied by the vehicle manufacturer, and of sufficient volume to effectively warn vehicles (including motor cycle riders) being overtaken. The device may be either:

- dual variable-tone compressor-type air horns, electronic variable tone warning device (klaxon horns, siren etc). An effective, simple and cheap device can be made from two standard sets of dual-tone electric air horns;
- 'musical' horns and other such novelty electronic devices (barking dogs, trumpeting elephants, machine gun sounds, etc) are prohibited.

As dust is a major problem with air horns, it is strongly recommended that electric compressor units for such be fitted wholly within an effectively dust-filtered container.

The audible warning device is an important safety item in Cross Country Rallies and the operation of such devices is strictly limited to use on selective sections when overtaking manoeuvres are in progress. The frivolous use of such devices or their use in built up areas is forbidden and may lead to penalties up to exclusion.

**1.13** A minimum of two spare wheels/tyres are to be carried. See Optional Equipment/Modifications for options.

**1.14** **Seats:** Occupants seats and their mountings are free, provided they comply with Schedule C (see "General Requirements for Cars and Drivers"). Seats must include a headrest.

The front seats may be moved backwards but not beyond the vertical plane defined by the front edge of the original rear seat (where fitted). The limit relating to the front seat is formed by the height of the seatback without the headrest, and if the headrest is incorporated into the seat, by the rearmost point of the drivers shoulders.

Notwithstanding, Off Road vehicles must comply with the provisions of the Off Road regulations in relations to seats.

## 2. CREW SAFETY

**2.1** A safety helmet must be worn by all crew members throughout all selective sections. Helmets must comply with a standard approved by CAMS and listed in Schedule D (see "General Requirements for Cars and Drivers").

The helmet must be in good condition (eg, no scratches, chips or incorrect painting) at all times. If a helmet is considered by the Chief Scrutineer at pre-event scrutineering or at any time during the event to be unsuitable or unsafe, the helmet will be rejected.

**2.2** All competitors must wear apparel complying with Schedule D, article 3v(d), of "General Requirements for Cars and Drivers" during all competitive sections.

**2.3** Safety goggles for all crew members must be carried on board, for use in case of a broken/removed windscreen excluding crew members who are wearing full faced helmets with approved visors. Goggles must comply with Australian Standard AS 1609-1974 and bear the SAA mark, or comply to an equivalent overseas standard. Refer Schedule D.

**2.4** **Water:** at least three litres for each crew member must be carried in at least two containers in the vehicle when leaving an overnight bivouac or refuel location where water is available. Water should not be carried in containers with taps at the base as loss of water through damage is possible. Any water container having a capacity exceeding three litres must comply with Australian Standard AS 2906.

**2.5** An additional two litres of water must be carried in each competition vehicle for emergency purposes only, and must not be consumed under normal circumstances.

Water containers are to be packed in the vehicle so as to be readily accessible for both crew and for organisers to check. Failure to carry specified amounts of water at all times could lead to exclusion.

**2.6** A survival blanket, or sleeping bag, for each crew member must be carried in the vehicle, in events of more than two days duration. Failure to carry same could lead to exclusion.



© Confederation of Australian Motor Sport Ltd. All use subject to Conditions of Use at *www.camsmanual.com.au*

**2.7** A first aid kit is required to be carried on board, complying with Schedule R, Article 13 (see "General Requirements for Cars and Drivers"), including the following items:

- 2 x extra large universal accident dressings
- 2 x large open weave bandages
- 2 x medium open weave bandages
- 1 x pair dressing scissors
- 1 x roll adhesive tape
- 6 x safety pins
- 1 x large burn dressing with non-adhesive surface
- 1 x thermo accident blanket
- 2 x medium combination pads
- 6 x adhesive plaster strips
- 1 x triangular bandage
- 2 x sterile eye pads
- 1 x First Aid manual

**2.8** An emergency food supply of high energy food is recommended to be carried in each vehicle, for events of more than two days duration but is not compulsory.

## 3. PROHIBITED EQUIPMENT

The following prohibitions apply to all vehicles:

**3.1** The use of studded or spiked tyres, or chains.

**3.2** Roof racks, or similar may not be fitted.

**3.3** No equipment may be fitted to the roof of the vehicle, save for radio aerials.

## 4. RECOMMENDED / OPTIONAL EQUIPMENT & MODIFICATIONS

**4.1** Recovery equipment may be carried and is recommended, such as Hi-Lift jack, snatch straps, pulleys, tow straps, etc.

**4.2** Spare components and tools may be carried in the vehicle. If carried they should be securely fixed behind the safety partition. If carried in the rear of a utility, which must also be fitted with a safety partition, they should be securely fixed to prevent them being thrown out endangering other competitors / vehicles.

**4.3** The interior of the luggage compartment may be modified to safely contain spare parts and tools.

**4.4** **Airbags:** Factory-fitted Supplementary Restraint Systems (SRS – airbags) may be disconnected or deactivated/ removed as per article 11 of Schedule A (refer "General Requirements for Cars and Drivers").

**4.5** **On-board cameras:** Cameras and video recorders may be fitted to vehicles upon permission being received from the organisers prior to the commencement of pre-event scrutineering.

Where the camera and recorder are combined into a unit (Camcorder) the unit must only be fitted to the roll over protection structure or other substantial part of the body shell of the vehicle. It must be mounted inside a safety cradle which fits closely around the body of the unit. The camcorder shall be held in place by a strap held tight by means of self-locking fasteners. The strap and cradle may be lightly padded. The cradle shall be constructed as shown in the diagram below and held to the roll over protection or body shell by means of a metal clamp and at least two 6mm class 8.8 bolts. Roll over protection type padding is to be placed on the outside of the box/carrier.

Where the camera is a separate unit, it need not be fitted inside the cradle described above, but the recorder shall be mounted in the luggage compartment, or where this is impractical (eg, hatchback vehicles), it shall be mounted inside a box made from aluminium of a minimum thickness of 5mm, held down by at least three 6mm diameter class 8.8 bolts.

Alternate cradle designs may be permitted, and must be submitted to the chief scrutineer for approval.

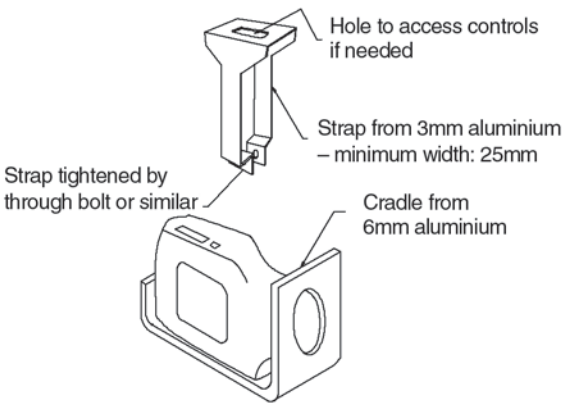


Diagram 4.5

**4.6** Extra driving lights may be fitted subject to the provisions of Schedule R (see "General Requirements for Cars



© Confederation of Australian Motor Sport Ltd. All use subject to Conditions of Use at *www.camsmanual.com.au*

and Drivers"). Headlight protectors may be fitted, either of mesh or plastic.

**4.7** Under body protection may be fitted, and if used must be securely fitted to the satisfaction of organisers.

**4.8** A winch may be fitted, but where any part of the winch equipment protrudes forward of the bumper bar/bull bar, sharp edges or corners must be eliminated.

## 5. OTHER

**5.1** All vehicles must respect the relevant maximum noise level, as specified by CAMS and/or civil authorities.

**5.2** Notwithstanding the modifications permitted in these regulations, it remains the responsibility of the competitor to comply with the relevant civil regulations pertaining to the use of the vehicle on public roads.

## 6. REPLACEMENT PARTS

The extent and limitation of modifications permitted are specified in this regulation. Any parts damaged, worn or broken whether by usage or accident during the event are only allowed to be replaced by manufacturer supplied parts, or parts which are identical to those replaced. Throughout the vehicle, any nut, bolt, screw may be replaced by any other nut, any other bolt, any other screw of the same specification, and may have any kind of locking device (washer, lock nut etc).

# GROUP AO

**'Showroom' Four-Wheel Drive Cross Country Recreational Vehicles & Utilities**

## 1. ELIGIBLE VEHICLES

Four-wheel drive Cross Country Recreational or light commercial (utility) vehicles which have at any time been on sale to the general public in Australia, and modified only to the extent prescribed hereunder.

## 2. OPTIONAL EQUIPMENT/MODIFICATIONS

All modifications are forbidden unless specifically authorised in these regulations.

The following optional modifications and/or equipment are allowed. Genuine factory options, though not listed, may be fitted, but the onus is on the competitor (previously referred to as the "entrant") to prove to organisers that such options are genuine factory options, and not after market additions. Proof of such will need to be adequately documented by way of manufacturer's brochure, manual etc to the satisfaction of the organisers. Minor accessories, which in the opinion of the organisers have absolutely no effect on the vehicle's performance, handling or competitiveness, may be permitted at the discretion of the Clerk of Course.

**2.1** Shock absorbers may be replaced by another shock absorber of similar type and operation, but the number of shock absorbers must remain as standard, and shock absorber mounts must remain standard in all ways. If, in order to change the damping element of a MacPherson strut type of suspension it is necessary to replace the entire MacPherson strut, the replacement parts must be mechanically equivalent to the original ones and have the same mounting points. The form of the spring seats in MacPherson strut type systems is free.

**2.2** Exhausts may be modified downstream of the first flange or joint after the exhaust manifold. Competitors are reminded that if a catalytic converter is fitted in the system it must be re-installed, also refer to the CAMS Manual for noise emission requirements.

**2.3** Internal trim (seats, headlining, carpets, door trim luggage area trim etc) may be removed behind the "B" pillar. Replacement temporary trim panels (plywood, masonite, plastic etc) may be fitted. Front floor coverings may also be removed.

**2.4** Frontal protection by way of a "bull bar" or similar is permitted, provided it is a proprietary article; ie, sourced through normal commercial channels. The removal of the original front bumper bar to allow fitting of a bull bar is permitted. A bull bar or other frontal protection must be attached only to the original front bumper bar mounts in a manner approved by the bull bar manufacturer, save that bull bar accessory side protection 'scrub bars' may also be fitted.

**2.5** The rear bumper bar may be replaced by one which is of a standard acceptable to the organisers. The bumper bar:

- must not have any sharp edges or protrusions,
- must not increase the width of the vehicle by more than 75mm over that standard bar.
- does not extend around the side of the vehicle further than the rearmost point of the wheel arches.
- does not have an overall height of more than 200mm.

**2.6** Air filter elements may be replaced, but the air filter housing must remain standard.

**2.7** Road wheels are free, but must retain standard dimensions as supplied or optional with the vehicle as originally purchased.

**2.8** Tyres are free, save that studded tyres are not permitted.

**2.9** Glass areas behind the "B" pillar may be sign-written or rendered opaque, provided always that two effective external rear view mirrors are fitted to the vehicle.

**2.10** Brake linings are free.

**2.11** Spark plugs are free.

**2.12** Air conditioning may be rendered inoperative or components removed in part or full

**2.13** A long range fuel tank may be fitted, either in addition to or replacing the standard fuel tank. Fuel for up to the maximum distance required, as advised in Supplementary Regulations will be required to be carried



© Confederation of Australian Motor Sport Ltd. All use subject to Conditions of Use at *www.camsmanual.com.au*

on board. Australian Standard AS 2906 approved fuel containers may be carried in the luggage compartment, and in such cases shall be carried with their fillers upright, within a securely fitted metallic container, which effectively secures the fuel containers, prevents their chafing by means of padding, and acts as a fire wall. A sign must be placed near the filler to indicate their contents (petrol, diesel etc). A maximum of 60 litres of fuel may be carried in such containers.

In this category, additional fuel tanks may not be fitted in the passenger or luggage areas of the vehicle, except in the case of utility type vehicles, where they may be fitted to the tray area. Tanks must be vented and fillers located externally to the coachwork.

**2.14** Spare wheels may be carried inside the luggage compartment behind the protective safety barrier, and must be adequately secured to the satisfaction of the organisers. Spare wheels normally mounted under the vehicle may be re-located. Approved spare wheel carriers, as supplied by recognised Australian manufacturers, may be fitted to the rear of the vehicle, or the rear replacement bumper bar.

## 3. VEHICLE CLASSES

Classes are divided into two groups;

| | |
|---|---|
| **Passenger vehicles** | All 4WD station wagon type vehicles; and |
| **Light Commercials** | All 4WD utility-type vehicles, including double cab |

| | |
|---|---|
| **Class A0.1** | Passenger vehicles up to 2000cc |
| **Class A0.2** | Passenger vehicles 2001 to 3500cc |
| **Class A0.3** | Passenger vehicles over 3500cc |
| **Class A0.4** | Passenger diesel vehicles all capacities |
| **Class A0.5** | Light Commercial vehicles up to 3500cc |
| **Class A0.6** | Light Commercial vehicles over 3500cc |
| **Class A0.7** | Diesel Light Commercial vehicles all capacities |

**NOTE:** Production turbocharged vehicles, while allowed to compete, are subject to their normal engine capacity being increased by a factor of 1.7 for petrol engine vehicles and 1.5 for diesel engine vehicles (eg, a 2.4 litre turbocharged vehicle – 2.4 x 1.7 = 4.08 litres) which would place it in the over 3500cc class.

Petrol-engined vehicles in all classes are limited to 6000cc, inclusive of the turbocharging factor of 1.7. Diesel engines which are supplied by the manufacturer with a turbocharger are limited to 7200cc, inclusive of the turbocharging factor of 1.5.

Classes may be combined in accordance with the provisions of the supplementary regulations.

# GROUP AI

**Production Four-Wheel Drive (4WD) Cross Country Recreational Vehicles and Utilities; 'Formula Four 4WD' Vehicles; and Off Road Vehicles**

## I. ELIGIBLE VEHICLES

### Production 4WD Cross Country Recreational Vehicles and Light Commercials

Production four-wheel drive recreation vehicles and light commercial vehicles (utilities) which have been on sale to the public, and which may be modified to the extent permitted by these regulations. The organisers must be able to be satisfied that at least 1000 identical vehicles must have been produced, the onus of proof resting with the competitor.

### 'Formula Four 4WD' vehicles

Production lightweight four cylinder four-wheel drive passenger vehicles, as specifically listed hereunder as eligible, and modified only to the limit of the Group A1 appendix.

**Eligible vehicles,** in alphabetical order:

| | |
|---|---|
| **Daihatsu** | Terios, Feroza, Rocky |
| **Holden** | Frontera (4 cyl) Cruze, |
| **Honda** | CRV , HRV |
| **Hyundai** | Sante Fe (4 cyl) |
| **Kia** | Sportage |
| **Lada** | Niva |



© Confederation of Australian Motor Sport Ltd. All use subject to Conditions of Use at *www.camsmanual.com.au*

| | |
|---|---|
| Mazda | Tribute (4 cyl) |
| Mitsubishi | Pajero IO |
| Nissan | Terrano II, X-Trail |
| LandRover | Freelander (4 cyl Diesel only) |
| Renault | Scenic RX4 |
| Subaru | Forester, Outback (4 cyl) Brumby ute |
| Suzuki | Jimny, Sierra, Vitara , Grand Vitara (4 cyl) |
| Tata | Safari EX |
| Toyota | Rav 4 |

Other models which come on to the Australian market may be eligible and the organisers should be contacted.

**CAMS Off Road vehicles**

Any vehicle which complies with the specific technical requirements of off road vehicles, as laid down in "Off Road" in the CAMS Manual of Motor Sport, will be deemed eligible for admission to Group A1.

Where these regulations refer to series production parts, dimensions and specifications, the onus is on the competitor to provide documentation, which may include homologation papers, original manufacturer's workshop manuals, etc, to satisfy the organisers of the bona-fides of any vehicle component.

## 2. OPTIONAL EQUIPMENT

2.1 **Manufacturer's Options:** Only such optional equipment as is offered by the manufacturer of the vehicle as a genuine manufacturer's option may be used, providing that:

- The option must be listed in an official publication (brochure, manual etc) and be available for general purchase through the normal distributor network to the general public.
- The official publication referred to above must show the approved method of fitting of that option, and such option may only be fitted in the approved manner.
- The onus of proof of eligibility of all such options shall rest solely with the competitor.

## 3. MODIFICATIONS ALLOWED

**Production 4WD Cross Country Recreational Vehicles and Formula Four vehicles**

All modifications are forbidden unless specifically authorised in these regulations.

3.1 **Wheels:** The road wheels (rims) are free, provided they are within a tolerance of ±1 inch of the same dimensions as those specified and supplied with the vehicle as original equipment, in respect of both diameter and width. In no case may they protrude beyond the wings or wheel arches, which must remain as standard.

3.2 **Tyres:** Are free, provided that their fitment to the rims is in accordance with Australian Tyre and Rim specifications. Studded tyres are forbidden.

3.3 **Spare wheel/s:** May be mounted inside the vehicle, on condition that they are firmly secured and do not intrude into the crew compartment. The original spare wheel mount/support may be removed. No more than two spare wheels may be carried.

3.4 **Engine**

- **The accelerator cable:** May be replaced or doubled by another one regardless of whether it comes from the manufacturer or not.
- **Ignition:** The make and type of spark plugs are free as are the rev limiters and high tension cables.
- **Cooling circuit:** The type of thermostat, which may be removed, is free.
- **Fuel and air feed:** Carburettor parts or fuel injection system parts regulating the quantity of fuel reaching the engine may be modified, provided they have no influence on air admission.

  The original injection system must be retained. The injectors may be changed for injectors which are identical except with regard to the size of the pintle nozzle hole at the end.

  The air filter, its housing and tube between the housing and the atmosphere are free, but the housing must remain in its original position, the air must not be taken from the cockpit, modifications must not affect the structure of the car, and the installation must fit entirely within the engine compartment.
- **Timing:** The springs and play of the valves are free, but the camshafts (including the profile of cams) must remain as standard.
- **Exhaust:** May be modified down stream of the first flange or joint after the exhaust manifold. Competitors are reminded that if a catalytic converter is fitted in the system then it must be reinstalled, also refer to the CAMS Manual for noise emission requirements (Schedule R, "General Requirements for Cars and Drivers"). The exit of the exhaust must be either to the rear or the side of the vehicle.
- **Cruise speed control:** May be disconnected or removed.
- **Soundproofing:** Soundproofing panels within the engine bay may be removed.

3.5 **Transmission**

- **Clutch:** The disc is free, including the weight, with the exception of the number and the diameter.



© Confederation of Australian Motor Sport Ltd. All use subject to Conditions of Use at *www.camsmanual.com.au*

## 3.6 Suspension

- **Coil springs:** Dimensions are free, but must be able to be fitted to the original unmodified spring seats.
- **Leaf springs:** Dimensions are free, but must be able to be fitted to the original unmodified mounts.
- **Torsion bars:** The diameter is free.
- **Shock absorbers:** Free, provided their type (telescopic, arm etc) their working principle (hydraulic, friction, mixed etc) and their attachment points remain unchanged. Gas filled dampers, regarding there working principle, will be considered as hydraulic dampers.

  If, in order to change the damping element of a MacPherson strut type of suspension it is necessary to replace the entire MacPherson strut, the replacement parts must be mechanically equivalent to the original ones and have the same mounting points. The form of the spring seats in MacPherson strut type systems is free.

  The number of shock absorbers is limited to a maximum of two per wheel. No other part, apart from those whose only function is to permit the fitting of an additional shock absorber, may be added or removed from the suspension.

## 3.7 Braking System

- **Brake linings:** Free as well as their method of mounting (riveted, bonded, etc) provided that the contact surface of the brakes is not increased.
- **Protection plates:** May be dismantled or bent.
- **Servo-assisted braking devices:** May be disconnected.
- **Anti-locking devices:** May be disconnected.
- **Brake lines:** May be changed for aviation-type lines (braided), provided they conform to Australian Standards.

## 3.8 Bodywork, Exterior

- **Hub caps** or other type of decorative wheel embellishers must be removed.
- **Headlight protectors** may be fitted provided their only practical function is to protect the glass.
- **Underbody protection guards** are recommended but only authorised provided:
- they are bona fide protection with respect to ground clearance;
- they are removable;
- they are designed specifically to protect the following parts:
- engine
- radiator
- suspension
- gearbox
- fuel tank
- transmission
- exhaust
- **Frontal protection:** by way of a "bull bar" or similar is permitted, provided it is of proprietary manufacture. The removal of the original front bumper bar to allow the fitting of a bull bar is permitted. A bull bar or other frontal protection must be only attached to the vehicle chassis on the original bumper bar attachment points and no other.
- **Sunroofs:** The glass panel of a sunroof may be replaced by a metal sheet with a minimum thickness of 1.5mm, with additional attachments if necessary. The operation of the sunroof may be disabled.
- **Glass area** behind the 'B' pillar may be sign written or rendered opaque, provided always, that two effective rear view mirrors are fitted to the vehicle.
- **Cabin roof vents:** Up to two flap vents may be added for the sole purpose of providing a supply of fresh air to the occupants, in the following conditions:
- maximum height: 10cm
- displacement contained within the front third of the roof
- hinges to the rear edge
- maximum total width of flap/s: 500mm
- Windscreen protection devices, attached externally to the "A" pillars of the vehicle, and which do not interrupt the free vision of the driver, may be fitted with the sole purpose of protecting the windscreen from damage by deflecting branches away from the glass area. Mesh screens covering all or any part of the glass area of the windscreen are forbidden.

## 3.9 Bodywork, Interior

- **Carpets:** All carpets may be removed.
- **Controls:** Controls supplied by the manufacturer may be added to or altered to make them more accessible or more easily useable, provided that they retain their full original function (eg, additional flange on footbrake pedal, or an extension to a handbrake lever).
- **Navigation aids,** measuring devices, map reading lights etc may be freely installed providing that their fitment is not likely to cause danger to the occupants.
- **The horn:** May be changed. An additional horn or horns may be added, possibly for the co-driver's use. 'Musical' horns are not permitted. Refer Audible Warning Device under Compulsory Equipment



© Confederation of Australian Motor Sport Ltd. All use subject to Conditions of Use at *www.camsmanual.com.au*

- **Seat covers** which have no other function than to provide additional comfort for the occupants, and that do not constitute an additional fire hazard, may be added to the original seats.
- **Additional compartments** may be added to the glove compartment, central console, or pockets to the doors.
- **Steering wheel** is free, providing it does not incorporate wood in its construction.
- **Electric windows** may be replaced by manual winding types. Rear and rear side windows may be rendered opaque, or removed and replaced with lexan or polycarbonate (minimum 4.5 mm thick) or metallic panel (minimum 1.2mm thick). The drivers and front passenger side window must remain as originally manufactured.
- **Air bags:** May be removed or disabled, with all ancillary operating systems.
- **Air conditioning:** May be removed or disabled.
- Rear **door trims** and side trim covers maybe replaced with panels (minimum 1mm thick).

### 3.10 Reinforcements

Strengthening of the suspended parts and body is allowed provided that the material used follows the original shape of the part and is in continuous contact with it. It is permitted to fit front reinforcement bars, on condition that they are removable and are bolted onto the attachment points of the suspension to the body shell, or onto suspension spring mounts. A hole may also be bored in the upper suspension trim to fit these rods.

Such bars may also be fitted to the rear, on each side, at a maximum of two points. The distance between these two points must be less than 10cm. The distance between one of these points and the suspension attachment is to be at most 10cm.

### 3.11 Electrical System

- **Battery:** The make, capacity and battery cables are free. The tension and location of the battery must be retained.
- **Generator or alternator:** May be replaced by one of a greater capacity. A generator may not be replaced by an alternator or vice-versa.
- **Lighting system:** Additional driving lights including necessary relays may be added, providing that the fitment of same does not involve any changes to the original body work and that they are fitted in accordance with the Traffic regulations of the relevant State/s or Territory. Headlight globes may be replaced.
- **Fuses:** May be added to the electrical system.

### 3.13 Fuel Tanks

The standard fuel tank, as and where originally fitted to the production vehicle may be retained. Additional fuel tanks of free but safe design may be fitted. Where additional fuel tanks are fitted, they must comply with the following:

(i) A flame and liquid proof firewall must be installed between the passenger compartment and the fuel tank, which effectively separates the crew from any component of the fuel tank or fuelling system.

(ii) Fuel tanks must be vented to the outside of the vehicle

(iii) Fuel tanks fitted to the original passenger compartment, (eg, in a station wagon-type vehicle) must be either an approved safety cell type construction, similar or equivalent to the FIA FT3 style tank, which is strongly recommended, or otherwise an approved "single skin" fuel; tank manufactured by a licensed fuel tank fabricator, which must be effectively protected from accidental damage or piercing , and installed to the satisfaction of the scrutineers.

(iv) All tanks must be fitted such that the filling orifice and ventilation are to the exterior of the bodywork. Filling orifices must be constructed such that any fuel spilled will drain safely to the outside of the vehicle.

(v) Safe approved fuel containers which comply with Australian Standard AS 2906 may be carried in the luggage compartment, and in such cases shall be carried with their fillers upright, within a securely fitted metallic container, which effectively secures the fuel containers, prevents their chafing by means of padding, and acts as a fire wall. A sign must be placed near the filler to indicate their contents (petrol, diesel etc). A maximum of 60 litres of fuel may be carried in such containers.

(vi) In this category, additional fuel tanks may not be fitted in the interior of the vehicle, except in the case of utility type vehicles, where they may be fitted to the tray area. Tanks must be vented and fillers located externally to the coachwork.

## 4. VEHICLE CLASSES

Classes are divided into groups as follows:

| | |
|---|---|
| **Class A1.1** | Recreational vehicles & Light Commercials up to 3500cc |
| **Class A1.2** | Recreational vehicles & Light Commercials over 3500cc |
| **Class A1.3** | Formula Four vehicles |
| **Class A1.4** | CAMS Off Road vehicles |
| **Class A1.5** | Diesel vehicles all capacities |



© Confederation of Australian Motor Sport Ltd. All use subject to Conditions of Use at *www.camsmanual.com.au*

**Note:** Production turbocharged vehicles, while allowed to compete, are subject to their normal engine capacity being increased by a factor of 1.7 for petrol engine vehicles and 1.5 for diesel engine vehicles (eg, a 2.4 litre turbocharged vehicle – 2.4 x 1.7 = 4.08litres) which would place it in the over 3500cc class.

Petrol-engined vehicles in all classes are limited to 6000cc, inclusive of the turbocharging factor of 1.7.

Diesel engines which are supplied by the manufacturer with a turbocharger are limited to 7200cc, inclusive of the turbocharging factor of 1.5.

## GROUP A2

**Modified Production Four Wheel Drive Recreational Cross Country Vehicles**

## 1. ELIGIBLE VEHICLES

**1.1** Vehicles derived from series production four wheel drive recreation vehicles and utilities which have been on sale to the public and which may be modified to the extent permitted by these regulations. The competitor *(previously known as the "entrant")* must be able to satisfy the organisers that at least 1000 identical vehicle shave been produced, the onus of proof rests with the competitor. If the vehicle is modified beyond that provided for in this group, it must (a) be transferred to an appropriate group by the competitor, or (b) have the offending parts or modifications removed prior to the completion of pre-event scrutineering, or it may be excluded by the organisers.

**1.2** Modified 4WD recreational cross country vehicles must have seating to accommodate at least two crew members.

## 2. MODIFICATIONS ALLOWED

### 2.1 Definitions

**2.1.1** Provided that the origin of the series production component can be established, it may be ground, balanced, adjusted, reduced or modified through machining and subjected to chemical or heat treatment.

**2.1.2** Where these regulations refer to series production parts, dimensions and specifications, the onus is on the competitor to provide documentation, which may include homologation papers, original manufacturer's workshop manuals etc to satisfy the organisers of the *bona fides* of any vehicle component.

**2.1.3** Only those modifications listed are allowed.

### 2.2 Engine

The engine must originate from the identical series production vehicle, or of a car of the same make homologated in Group A (touring cars) or in the FIA Series productionT1 Cross Country group.

**2.2.1** **Supercharging or turbocharging** of petrol or diesel engines is permitted if the basic model comes equipped from the manufacturer.

**2.2.2** **Engine block and cylinder head:** It is permitted to close the unused apertures in the engine block and cylinder head, if the only purpose of this operation is that of closing. A re-bore of 0.6mm maximum is allowed in relation to the original bore. The re-sleeving of the engine block is allowed within the same conditions as for reboring. Planing of the cylinder block is allowed.

**2.2.3** **Connecting rods and crankshaft:** Maybe be modified in accordance with 2.1.1.

**2.2.4** **Bearing shells:** Make and material are free, they must retain their original shape and dimensions.

**2.2.5** **Flywheel:** May be modified in accordance with 2.1.1

**2.2.6** **Pistons:** Are free, as are the piston rings, gudgeon pins and their securing mechanism.

**2.2.7** **Compression ratio:** is free.

**2.2.8** **The cylinder head:** May be modified only by the removal of material form the combustion chambers, intake and exhaust ports and the head gasket surface.

**2.2.9** **Cylinder head gasket:** is free.

**2.2.10** **The accelerator cable:** may be replaced or doubled by another one regardless of whether it comes from the manufacturer or not.

**2.2.11** **Ignition system:** is free, provided the system remains the same as laid down by the manufacturer, for the model concerned (battery/coil or magneto).

**2.2.11.1** The number of spark plugs per cylinder, must remain the same as per manufacturer's specifications.

### 2.3 Cooling System

**2.3.1** The **radiator** is free, provided that can be fitted into the original fixtures on the vehicle without modification.

**2.3.2** A **radiator screen** may be fitted.

**2.3.3** The **fan** and its drive system may be changed or removed. The addition of extra fans is allowed, but only for the purpose of cooling the radiator.

**2.3.4** The **thermostat** is free.

**2.3.5** The fitment of a **water catch tank** is allowed.

**2.3.6** The **radiator cap** may be locked.

**2.3.7** The **water injection devices** may be disconnected, but not removed.

**2.3.8** The **expansion chamber** may be modified. If one does not exist, one may be fitted.



© Confederation of Australian Motor Sport Ltd. All use subject to Conditions of Use at *www.camsmanual.com.au*

## 2.4 Fuel and air feed

**2.4.1** The **air filter**, including the filter box and the plenum chamber, is free.

**2.4.2** The **air filter system** may be re-located within the engine bay.

**2.4.3** The pipe between the air filter and the intake on the engine is free.

**2.4.4** **Fuel pumps** are free, but not fitted within the cockpit.

**2.4.5** It is permitted to fit a radiator in the fuel circuit.

**2.4.6** **Fuel filters**, with a maximum unit capacity of 0.5 litres may be fitted to the fuel system.

**2.4.7** The **accelerator linkage** is free.

**2.4.8** The **exchangers for diesel engines** are free in the engine compartment, but the bodywork must not be modified.

**2.4.9** The pipes between the turbocharging or supercharging device and the intercooler and the manifold are free, but their only function must be to channel air.

**2.4.10** **Water injection** is permitted, but the use of any other substance to reduce the temperature of the mixture is forbidden.

**2.4.11** **Intake manifolds** maybe internally modified, but the exterior must remain intact.

**2.4.12** The connection between the waste gate and the housing may be made adjustable. The original system of operation of the waste gate may be modified to be adjustable, but the system must be retained. A mechanical system must remain mechanical and an electrical system must remain electrical etc.

## 2.5 Carburetor

The carburetor/s are free, as long as their original make and model, their operating principle and position is respected. The diameter and the number of butterfly valves, as per the series production specification must be retained.

## 2.6 Injection

**2.6.1** The original system and its type, as per the series production specification of the vehicle must be retained, as must its location.

**2.6.2** The elements of the injection device regulating the metering of the quantity of fuel admitted to the engine may be modified.

**2.6.3** The **air measuring device** is free.

**2.6.4** The **injectors** are free, except their number, their position, their assembly axis and their operating principle.

**2.6.5** The **ECU** is free, in so far as it does not incorporate more data.

**2.6.6** The **fuel regulator** is free. In the case of a diesel engine, the injection pump is free.

## 2.7 Camshaft/s

**2.7.1** The number must remain the same.

**2.7.2** The profile of lobes and timing is free.

**2.7.3** Pulleys, chains and belts are free.

**2.7.4** The guides and tensioners associated with these chains or belts are free, as are their protective covers.

## 2.8 Valve Train

**2.8.1** **Valves,** the material and shape of the inlet and exhaust valves are free, but their characteristic series production dimensions must be retained, including the respective angles of the valve axis.

**2.8.2** **Cups, collets and guides** are not subject to any restriction.

**2.8.3** **Valve springs** are free.

**2.8.4** **Rocker arms and pushrods** may be modified in accordance with 2.1.1.

## 2.9 Manifolds

**2.9.1** **Exhaust manifold:** maybe be modified or replaced with a non-genuine make, save for turbocharged engines.

**2.9.2** **Inlet manifolds:** Internal ports and chambers may be modified as per 2.1.1.

## 2.10 Lubrication

**2.10.1** **Oil coolers, pressure hoses and filters** are free, on condition, that the bodywork is not modified to accommodate the additions or changes. No part of this system is to be located in the cockpit or baggage compartment.

**2.10.2** **Dry sump lubrication systems** are permitted. The oil chamber, together with the lines, must not be located in the cockpit or in the baggage compartment.

**2.10.3** **Oil pressure and flow** may be increased by modifications to the engine oil pump as per 2.1.1.

**2.10.4** If an engine is not fitted with a PCV system, an **oil catch tank system** must be fitted. This must have a capacity of two litres for engines up to a capacity of 2000cc and three litres for engines over 2000cc and must be fitted within the engine bay.

## 2.11 Engine Mounts

**2.11.1** Engine mounts are free. Except for the number.

**2.11.2** The original mounting positions on the engine and the chassis must remain original.

**2.11.3** The use of engine restraints is permitted.

**2.12** **Gaskets:** All gaskets are free.

**2.13** **Engine springs:** Springs are not subject to any restrictions, but they must retain their original function.



© Confederation of Australian Motor Sport Ltd. All use subject to Conditions of Use at *www.camsmanual.com.au*

**2.14** **Engine starter motor:** A starter must be retained, its make and type are free but the principle of operation must remain the same as original.

**2.15 Exhaust System**

**2.15.1** The exhaust system if free respecting other requirements in these regulations (2.2.10).

**2.15.2** The **exhaust exit** must be within the vehicle's perimeter.

**2.15.3** **Noise emission levels** must meet the requirement of Schedule R, article 7 (see "General Requirements for Cars and Drivers").

**2.15.4** Vehicles required by ADRs to have a **catalytic converter** fitted must have one fitted in the system.

**2.16 Driveline**

**2.16.1** **Clutch:** Design and construction is free, with the exception of the number and diameter.

**2.16.2** **Driven wheels:** The number of driven wheels must remain as in the series production vehicle.

**2.16.3** **Gearbox and transfer box:** The original gearbox and transfer box casings from the production model must be used, but gear material and ratios are free. No increase or decrease of the number of gears is permitted.

**2.16.4** **Sequential gearboxes** are prohibited.

**2.16.5** The use of a **torque converter** is only permitted in conjunction with automatic transmissions.

**2.16.6** **Oil cooling devices** may be fitted, all components must be fitted to the underneath of the vehicle.

**2.17 Final drives, differentials and housings**

**2.17.1** Original housings or casings from the production vehicle must be used.

**2.17.2** Housings may be reinforced, but always must be recognised as the production component.

**2.17.3** The **final drive mechanism** is free, including gear material and ratios.

**2.17.4** **Half shafts, axles and tail shafts** are free.

**2.17.5** **Oil cooling devices** may be fitted, all components must be fitted to the underneath of the vehicle.

**2.18 Suspension**

**2.18.1** **Shock absorbers** are free, provided the type and the working principle is the same and can be fitted to the original mounting points.

**2.18.2** An **additional shock absorber** may be added, per corner. They are only to perform the primary function, that is, mounted between chassis and control arms or live axle casings or spring plates.

**2.18.3** Additional mounting points fitted to the vehicle to accommodate their fitment must not perform any other function.

**2.18.4** The strengthening of suspension mounting points is permitted, provided any additional material or welding follows the contours of the original production component.

**2.18.5** The dimensions of the **coil springs, leaf springs and torsion bars** are free, but must be fitted to the original production mounting points.

**2.18.6** **Anti-sway bars** are free, but must be fitted to the original production mounting points.

**2.18.7** **Suspension travel limiting devices** may be fitted.

**2.18.8** **Reinforcement bars** from the suspension mounting points to the body or chassis may be installed.

**2.19 Steering**

**2.19.1** Steering arms may be strengthened, provided material follows original contour.

**2.19.2** Steering principle must be retained (rack and pinion/box etc). **Power steering** may be added from the same make and model of vehicle.

**2.19.3** **Power steering oil coolers** may be fitted.

**2.19.4** **Steering lock devices** are to be disconnected.

**2.20 Control Arms**

**2.20.1** **Control arms, trailing arms, lateral arms and locating arms** must be of the production vehicle type.

**2.20.2** The arms may be strengthened by the addition of material, but the additions must follow the original contour.

**2.20.3** Mounting points may be strengthened using the same method as above.

**2.21 Wheels**

**2.21.1** Road wheels are free in size and construction, provided they attach to the vehicle with no modifications.

**2.21.2** The fitting of spacers between the hub and the wheel is forbidden.

**2.21.3** **Wheel fixation:** Wheel studs and nuts may be changed but the method of the wheel being attached to the vehicle may not.

**2.22 Tyres**

**2.22.1** Tyres are free, with the following exceptions:

**2.22.2** They must be the correct size for the rim.

**2.22.3** When fitted to the vehicle, they must not exceed outside the body silhouette.

**2.22.4** The use of spiked tyres is banned.

**2.22.5** They must not rub on any portion of the body, chassis or steering componentry, through its normal operating parameters.

**2.23 Brakes**

**2.23.1** Rotors and drums, the size and construction are free, but they must be mounted on to the original fixing points.



© Confederation of Australian Motor Sport Ltd. All use subject to Conditions of Use at *www.camsmanual.com.au*

**2.24 Hydraulics**

**2.24.1** **Master cylinders, wheel cylinders and calipers** are free, but must be mounted on to the original fixing points.

**2.24.2** The **hydraulic brake fluid lines** are free, but steel pipe is to be used (not copper) and flexible hoses may be substituted for the braided type, provided they pass Australian Standards.

**2.24.3** **Servo-assisted braking devices** may be disconnected.

**2.24.4** The fitment of a **hydraulic hand brake** is permitted, provided a mechanical handbrake unit is retained.

**2.25 Lining material:** Material is free as is the method of attachment to shoes or backing plates.

**2.26 Protection/backing plates**

**2.26.1** These maybe removed or modified for the purpose of cooling.

**2.26.2** **Air ducts** may be fitted for the only purpose of channelling air to the brake system, but the maximum OD size of the pipe is 50mm.

**2.27 ABS: Anti-lock brake systems** may be disconnected.

**2.28 Chassis/Body**

**2.28.1 Chassis:**

**2.28.1.1** It is forbidden to cut the chassis for the purpose of shortening or lengthening.

**2.28.1.2** All production braces and body mount brackets must remain intact, extra body mounts are permitted.

**2.28.1.3** Chassis to body mount material is free, but the original distance between the two surfaces is not allowed to change.

**2.28.1.4** Strengthening of the sprung components of the chassis and body work is permitted, provided that any additional material follows the original contour.

**2.28.1.5** Jacking points may be increased, modified and/or strengthened, but these points must have no other function.

**2.28.2 Body – Exterior:**

**2.28.2.1** The external silhouette of the vehicle must be conserved in its entirety, except for the following freedoms,

**2.28.2.2** **Hub caps** or wheel embellishers must be removed.

**2.28.2.3** **Head light protectors** may be fitted, provided their sole function is to protect and not act as an aerodynamic aid.

**2.28.2.4** **Underbody protection devices** may be fitted to protect components, but they must be removable (ie, bolted) and form no other function.

**2.28.2.5** The fitting of frontal protection by the way of a "bull bar" is permitted, provided is a commercially available unit. The removal of the original bumper bar to allow for fitment is allowed. This bar is only to be fitted using the original mounting points for the bumper bar.

**2.28.2.6** **Sun roofs:** the glass may be removed and replace with metal with a thickness of 1.5mm minimum.

**2.28.2.7** **Windscreen washer devices** may be changed, the capacity of the washer tank increased and may be re-located.

**2.28.2.8** The fitment of up to two **cabin vents** is allowed, for the sole purpose of providing a supply of fresh air to the occupants. These vents must be forward opening, no more than 100mm high and 100mm wide and positioned within the front third of the roof.

**2.28.2.9** **Registration plates,** their attaching device and including the illumination may be repositioned, but must still conform with statutory regulations.

**2.28.2.10** **Windscreen protection devices** attached to the "A" pillars to protect the screen from damage by the way of deflecting foreign objects are permitted. The maximum height of the deflectors is 75mm. They are not to perform any other function. Mesh wind screen coverings are not permitted.

**2.28.2.11** Additional fastening devices for the windscreen and the side windows are permitted, but must not perform any other function or be an aerodynamic device in any shape or form.

**2.28.2.12** Wheel arch extensions are permitted to be fitted. They must be attached to a minimum of 90% of the arch. They must not protrude beyond the standard silhouette by more than 75mm.

**2.28.2.13** Under-bonnet and wheel arch protective/insulation material may be removed.

**2.28.2.14** After-market **body skirt kits** are not permitted.

**2.28.2.15** **External rear view mirrors** are to be fitted, design and construction is free, but the reflective surface must be a minimum of 90 sq. cm. It is recommended that they be protected from accidental removal.

**2.28.2.16** The material used by the manufacturer to construct the body must remain the same type.

**2.28.2.17** The front door window glass may be substituted for another transparent material of at least 4.5mm thick.

**2.28.2.18** The glass area behind the "B" pillar may be sign written or rendered opaque, provided that, two effective external rear view mirrors are fitted to the vehicle.

**2.28.2.19** For ute/pickup-type vehicles it is permitted to replace the material of the rear window to allow the fitment of the rear braces for the ROPS. This material may be metal, of a thickness of 1.5mm minimum or clear material of a thickness of 3.5mm minimum.

**2.28.3 Body - Interior:**

**2.28.3.1** **Cockpit:** no mechanical part may protrude into the interior of the area. Modifications to the cockpit



© Confederation of Australian Motor Sport Ltd. All use subject to Conditions of Use at *www.camsmanual.com.au*

must not be dangerous to the occupants, especially in the case of an accident.

**2.28.3.2** All **original seating** may be removed and replaced with other units, provided they comply with Schedule C (see "General Requirements for Cars and Drivers"). The front seats may be repositioned but not beyond the vertical plane defined by the front edge of the original rear seat. All occupied seats must have an incorporated head restraint.

**2.28.3.3** The **dashboard** must remain intact but, gauges and monitoring devices may be changed or added. Holes are allowed to cut into the dash to allow for the fitment of the front stays of the ROPS.

**2.28.3.4** The complete **sound system** may be removed from the vehicle (radio/tape/CD/speakers).

**2.28.3.5** Operating switches for the lights, horn, wipers and washers may be repositioned.

**2.28.3.6** The addition of **navigational aids** including bracketry is free.

**2.28.3.7** The complete **air conditioning system** may be removed.

**2.28.3.8** The **heating system** may be removed but an effective front windscreen demister must be operative.

**2.28.3.9** **Floor coverings and roof lining material** may be removed.

**2.28.3.10** Brake, clutch and accelerator **pedal surfaces** may be altered.

**2.28.3.11** The fitment of a **foot brace** for the co-driver is permitted, but the feet must not be permitted to fit underneath the unit.

**2.28.3.12** **Air bags** (SRS) may be disconnected or removed.

**2.28.3.13** **Steering wheels** are free but must conform to Australian standards.

**2.28.3.14** Extra **pockets or storage compartments** may be added to the doors or console.

**2.28.3.15** Rear door and rear side **door trims** may be changed.

**2.28.3.16** The **spare wheels** must be securely mounted and not installed in the space reserved for the occupants.

**2.28.3.17** All **spare parts**, containers, and tools must be securely mounted and in no way be allowed to become a risk to the occupants.

### 2.29 Electrical

**2.29.1** **Fuses, circuit breakers and relays** are free in their number, type and position.

**2.29.2** **Cruise control** may be disconnected.

**2.29.3** The nominated **voltage** by the manufacturer must be maintained.

**2.29.4** **Electric window** operating mechanism may be changed to mechanical.

**2.29.5** **Battery/ies** are free, in number, size and capacity (amp hours). They may be mounted anywhere in the vehicle. It will be permitted to place the battery in the cockpit, but only behind the front seats. In this case, the battery must be covered by a leak proof plastic box, fitted with a breathing tube which exits to the outside of the vehicle. The battery mounting must be substantial and safe and must be able to endure extreme conditions.

**2.29.6** The **generator or alternator** and the regulating device are free, but the mounting points and the drive system must remain as the production vehicle, but a larger diameter pulley may be fitted.

**2.29.7** **Lighting:**

**2.29.7.1** All lighting and signalling must remain in the same position as manufactured.

**2.29.7.2** The make of the lighting devices are free.

**2.29.7.3** The mounting of additional driving lamps and reverse lamp is allowed. Refer to Schedule R – see "General Requirements for Cars and Drivers".

### 2.30 Fuel Tanks

**2.30.1** The standard fuel tank as and where originally fitted to the production vehicle may be retained. Additional fuel tanks of a free but safe design may be fitted.

**2.30.2** A flame- and liquid-proof **firewall** must be installed between the passenger compartment and the fuel tank, which will effectively separate the crew from any component of the fuel tank and fuelling system.

**2.30.3** Fuel tanks must be **vented** to the outside of the vehicle.

**2.30.4** Fuel tanks originally fitted to the passenger department must be either an approved safety cell type construction, equivalent to the FIA FT3 style fuel tank, which is strongly recommended or otherwise an approved "single skin" fuel tank manufactured by a licensed manufacturer, which must be effectively protected by accidental damage or piercing. It is to be installed to the satisfaction of the event vehicle scrutineers.

**2.30.5** All tanks must be fitted such that the **filling orifice and ventilation** are to the exterior of the body work. Filling orifices must be constructed such, that any fuel spilled will drain safely to the outside of the vehicle.

**2.30.6** The carrying of **additional fuel containers** which are not part of the plumbed system is banned for Group A2 vehicles.

## 3. VEHICLE CLASSES

| | |
|---|---|
| **Class A2.1** | Vehicles up to and including 3500cc |
| **Class A2.2** | Vehicles 3501cc and over |
| **Class A2.3** | Diesel vehicles of all capacities |

**Note:** Production turbocharged vehicles, while allowed to compete, are subject to their normal engine



© Confederation of Australian Motor Sport Ltd. All use subject to Conditions of Use at *www.camsmanual.com.au*

capacity being increased by a factor of 1.7.

Petrol-engined vehicles in all classes are limited to 6000cc. inclusive of the turbo charge factor of 1.7.

Diesel engines which are supplied by the manufacturer with a turbo charger are limited to 7200cc. inclusive of the turbo charge factor of 1.5.

## GROUP A3

**Modified Two-Wheel Drive (2WD) Vehicles, & CAMS Off Road Extreme 2WD & Performance 2WD Vehicles**

## 1. ELIGIBLE VEHICLES

### 1.1 Modified Two-Wheel Drive Vehicles:

Vehicles up to 3500kg, having their origin in a production vehicle, and having four road wheels, only two of which are driven, and which satisfy the organisers as being roadworthy, and which are registered for public road use within Australia, and which are not and have not been registered as either a CAMS Extreme 2WD or Performance 2WD off road vehicle. The vehicles must conform to the specific requirements of these regulations. There is no minimum importing, manufacturing or assembly requirement.

### 1.2 CAMS Off Road Extreme 2WD and CAMS Off Road Performance 2WD Vehicles:

- Vehicles complying to CAMS requirements for Extreme 2WD vehicles, as laid down in "Off Road" in the CAMS Manual of Motor Sport and
- Vehicles complying to CAMS requirements for Performance 2WD vehicles, as laid down in "Off Road" in the CAMS Manual of Motor Sport).
- All Extreme 2WD and Performance 2WD vehicles must have been registered with CAMS in their particular off road class.
- Provision may exist for unregistered CAMS Extreme 2WD and Performance 2WD vehicles to compete in the event by way of a special road permit issued by the relevant state or territory Department of Road & Transport.

## 2. MODIFICATIONS - RESTRICTIONS

All modifications are allowed, apart from the restrictions as listed hereunder:

**2.1** **Wheels and tyres** must be completely covered by the mudguard and/or mudguard flares.

**2.2** The **engine number and chassis number** must be as shown on the certificate of registration (for registered modified 2WD vehicles).

**2.3** **Tyres** are free, save that studded tyres are not permitted.

**2.4** A **long-range fuel tank** of free but safe design may be fitted, either in addition to or replacing the standard fuel tank. Fuel for up to the maximum range as advised in Supplementary Regulations will be required. Tanks must be vented and fillers located externally to the coachwork. Additional fuel containers which are not a part of the piped fuel system are banned in Group A3.

## 3. VEHICLE CLASSES

| | |
|---|---|
| Class A3.1 | Modified 2WD vehicles up to 3500cc |
| Class A3.2 | Modified 2WD vehicles over 3500cc |
| Class A3.3 | CAMS Off Road Extreme 2WD vehicles |
| Class A3.4 | CAMS Off Road Performance 2WD vehicles |
| Class A3.5 | Light Commercial vehicles up to 3500cc |

**Note:** Production turbocharged (or supercharged) vehicles, while allowed to compete, are subject to their normal engine capacity being increased by a factor of 1.7 (eg, a 2.4 litre turbocharged vehicle: 2.4 x 1.7 = 4.08 litres) which would place it in the over 3500cc class.

Petrol-engined vehicles in all classes are limited to 6000cc, inclusive of the turbocharging factor of 1.7. Diesel engines which are supplied by the manufacturer with a turbocharger are limited to 7200cc, inclusive of the turbocharging factor of 1.5.



© Confederation of Australian Motor Sport Ltd. All use subject to Conditions of Use at *www.camsmanual.com.au*

## GROUP A4
CAMS Off Road Buggies

### 1. ELIGIBLE VEHICLES

**CAMS Off Road Buggies:**

- Vehicles complying to CAMS requirements for Off Road Buggies, as laid down in Article SR1 (see "Specific Requirements (SR) for off Road Vehicles" in "Off Road" in the CAMS Manual of Motor Sport.
- All Group A4 vehicles must have been registered with CAMS in their particular off road class and therefore in possession of the appropriate and current CAMS log book.

  Provision may exist for unregistered Group A4 vehicles to compete in the event by way of a special temporary road permit issued by the relevant state or territory Department of Road & Transport.

### 2. MODIFICATIONS - RESTRICTIONS

All modifications and/or restrictions in this Group are as per "Off Road" in the CAMS Manual of Motor Sport for the relevant class.

**2.1 Tyres** are free, save that studded tyres are not permitted.

### 3. VEHICLE CLASSES

| | |
|---|---|
| Class A4.1 | CAMS Off Road Pro Buggy |
| Class A4.2 | CAMS Off Road Prolite Buggy |
| Class A4.3 | CAMS Off Road Super 1650 Buggy |
| Class A4.4 | CAMS Off Road Sportsman Buggy |
| Class A4.5 | CAMS Off Road Clubman Buggy |

**Note:** Production turbocharged vehicles, while allowed to compete, are subject to their normal engine capacity being increased by a factor of 1.7 for petrol engine vehicles and 1.5 for diesel engine vehicles (eg, a 2.4 litre turbocharged vehicle: 2.4 x 1.7 = 4.08 litres) which would place it in the over 3500cc class.

Petrol-engined vehicles in all classes are limited to 6000cc, inclusive of the turbocharging factor of 1.7. Diesel engines which are supplied by the manufacturer with a turbocharger are limited to 7200cc, inclusive of the turbocharging factor of 1.7.

## GROUP A5
Unlimited Four-Wheel Drive Recreational Vehicles & CAMS Off Road Extreme 4WD Vehicles

### 1. ELIGIBLE VEHICLES

**1.1 Unlimited Four Wheel Drive Recreational Vehicles:**

Vehicles derived from series production four-wheel drive passenger or light commercial vehicles which have been on sale to the general public, weighing up to 3500kg, having four or more wheels and which satisfy the organisers as being roadworthy, and which have been registered or permitted for use on public roads within Australia. These vehicles must conform to any specific requirements in these regulations. There are no minimum importing, manufacturing or assembly requirements.

**1.2 CAMS Extreme 4WD Off Road Vehicles:**

Vehicles complying with CAMS requirements for Extreme 4WD vehicles as laid down in "Off Road" in the CAMS Manual of Motor Sport.

### 2. MODIFICATIONS - RESTRICTIONS

**2.1 Unlimited 4-Wheel Drive Vehicles:**

All modifications are allowed apart from the restrictions specified hereunder:

**2.1.1 Coachwork/Chassis:** The body must originate from a production vehicle, and substantially resemble the original. The overall height, width and length of the vehicle may not be less than that of the original vehicle from which it is derived. The chassis is free.

**2.1.2 Engine:** The engine is free, as are the modifications, save that no part of the engine block of a front-engined vehicle may extend rearward of the halfway point of the wheelbase (ie, halfway between the wheel hubs). For rear-engined vehicles, the original engine/gearbox and final drive configuration in relation to the body must be retained.

**2.1.3 Driveline:** All components are free.

**2.1.4 Suspension:** Components and design are free.

**2.2 CAMS Extreme 4WD Vehicles:**

All modifications and/or restrictions in this Group are as per "Off Road" in the CAMS Manual of Motor Sport (Extreme 4WD).



© Confederation of Australian Motor Sport Ltd. All use subject to Conditions of Use at *www.camsmanual.com.au*

## 3. OPTIONAL EQUIPMENT

**3.1** **Tyres** are free, save that studded tyres are not permitted.

**3.2** A **long-range fuel tank** of free but safe design may be fitted, either in addition to or replacing the standard fuel tank. Fuel for up to the maximum range as advised in Supplementary Regulations will be required. Tanks must be vented and fillers located externally to the coachwork. Additional fuel containers which are not a part of the piped fuel system are banned in Group A5.

## 4. VEHICLE CLASSES

| | |
|---|---|
| **Class A5.1** | Modified 4WD recreational vehicles up to 3500cc |
| **Class A5.2** | Modified 4WD recreational vehicles over 3500cc |
| **Class A5.3** | CAMS Off Road Extreme 4WD vehicles |

**Note:** Production turbocharged vehicles, while allowed to compete, are subject to their normal engine capacity being increased by a factor of 1.7 for petrol engine vehicles and 1.5 for diesel engine vehicles (eg, a 2.4 litre turbocharged vehicle: 2.4 x 1.7 = 4.08 litres) which would place it in the over 3500cc class.

Petrol-engined vehicles in all classes are limited to 6000cc.



© Confederation of Australian Motor Sport Ltd. All use subject to Conditions of Use at *www.camsmanual.com.au*