SPECIFICATIONS OF AUTOMOBILES

All vehicles in races and other speed events must comply with the General Requirements of Automobiles (see "General Requirements for Cars and Drivers" in the CAMS Manual of Motor Sport).

3rd Category – Touring Cars
Group 3D – Sports Sedans

1. GENERAL

An automobile for which a Sports Sedan Log Book has been issued prior to 31 December 2006 and which does not comply with the 2007 Technical Regulations will be permitted to continue to compete provided it remains in compliance with the 2006 Technical Regulations in their entirety. Owners of such vehicles should contact CAMS.

1.1 This group envisages a considerable degree of modification to automobiles so as to render them more suitable for competition without modification to the external body shape except as specifically allowed for in the Regulations. This group caters for dedicated circuit racing cars of essentially free construction which utilise coachwork being recognisable as that of a production vehicle. The basic vehicle shall be a front-engined car utilising either a steel tube chassis to which a non-load bearing coachwork shall be attached (spaceframe vehicle), or heavily modified vehicle that utilises the standard factory sheetmetal (floorpan vehicle). The vehicle must have four non-aligned wheels, of which only two are used for steering. Where a restriction is not specifically applied, the car is otherwise free.

1.2 **Defined Car:** The basis for the vehicle, and name by which it is known, will be the body/chassis unit. The use of exotic and/or interesting vehicles as the Defined Car is encouraged.

1.3 Cars must conform with General Requirements (as applicable) defined at Schedules A, B and, in races, C (refer to "General Requirements for Cars and Drivers" in the CAMS Manual of Motor Sport).

1.4 Electronic handling devices are specifically prohibited.

2. ELIGIBILITY

To be eligible for this group cars must be series production closed cars, manufactured primarily from steel and must be or have been:

(1) on sale in Australia through a recognised manufacturer franchised dealer network, or

(2) of a type of which a minimum of 5,000 examples have been manufactured worldwide, or

(3) automobiles which otherwise do not comply with (1) and (2) above but which have been recommended by NSSC and approved by CAMS. Cars which are presently so approved:

- Toyota MR2 only when fitted with reciprocating engine (of up to two litres) or twin-rotor rotary engine.

  Such vehicles, where issued with a log book prior to 1 August 2002, may continue to compete in mid-engined format with the engine to the rear of the midpoint of the wheelbase.

  Note 1: Any new mid-engined cars will only be eligible where the complete engine is positioned forward of the midpoint of the wheelbase.

  Note 2: Manufacturer-supplied optional body kits, where each component is identified by a manufacturer's part number, will be considered for approval by NSSC and CAMS, each being evaluated on its merits.

  Note 3: In all cases the base model of each eligible vehicle will be the reference for wheelbase, track width, maximum width and length of coachwork.

3. COACHWORK

3.1 The body shell (deemed to be the roof, A, B and C pillars, sill panels, scuttle/plenum panel and the front door frames) shall be unchanged in external shape except as hereinafter provided.

3.2 (i) The bumper bars and grilles must retain their original shape and position save that the material (refer 3.11) and method of attachment are free. The shape of wrap-around bumper bars/fascias may be modified only to accommodate the fitment of mudguard flares and air dams except as hereinafter provided.

(ii) The rear bumper, fascia, or beaver panel may be modified to facilitate the passage of exhaust pipe/s. No part of the opening is to be above a horizontal plane passing through the centre of the rear wheel hubs.

(iii) Cars manufactured as standard with a sunroof must have a permanent replacement panel fitted into the

© Confederation of Australian Motor Sport Ltd. All use subject to Conditions of Use at *www.camsmanual.com.au*

sunroof opening so as to make the roof section one piece. Such panels must be of similar material to the remainder of the retained roof panel.

(iv) The area of the rear coachwork to which is fitted the registration plate of standard size may be removed and replaced with mesh to permit ventilation.

(v) The area of the A, B and C pillars, sill panels and front door frames that would be visible when the doors are open will not be required should the vehicle be constructed with non-opening doors.

3.3 External body trim decoration greater than 150mm in width must remain in place.

3.4 Mudguards:

(i) When viewed from above, the coachwork must cover the complete wheels to the horizontal centreline of the hubs.

(ii) The rear extremities of the front and rear mudguards and/or extensions must continue below a horizontal line drawn through the wheel hubs and must cover the full width of the tyres down to hub height when viewed from the rear.

(iii) No holes are permitted in mudguards other than those originally provided by the manufacturer.

(iv) Mudguards may be flared and/or extended in order to cover the tyres as required in paragraphs (i) and (ii) above. The flares may be extended in width up to a maximum of 100mm per side in excess of the original width of the body at the measured point. From the reformed wheel arch the mudguard flare must merge from the allowed 100mm to 50mm by 50% of the length of flare, and therefore merge with the original body at an included angle of not more than 45° (refer to diagram 1). Flares may be made of alternative material (refer 3.11).

Any flares or extensions of mudguards which are less than the maximum permitted dimensions must fit within the silhouette which would have been created by a flare of the maximum dimensions.

A line drawn from the outer lip of the flare to the point at which the flare joins the original body panel must meet that panel at an angle of not more than 45°.

(v) The mudguard and/or flare may be modified to permit the exhaust pipe outlet to pass through a cutout/relief therein such that no part of the modification is above a horizontal plane passing through the centre of the rear wheel hub.

(vi) Available DTM/TransAm-style bodywork may be used when recommended by the NSSC and CAMS for approval.

Diagram 1

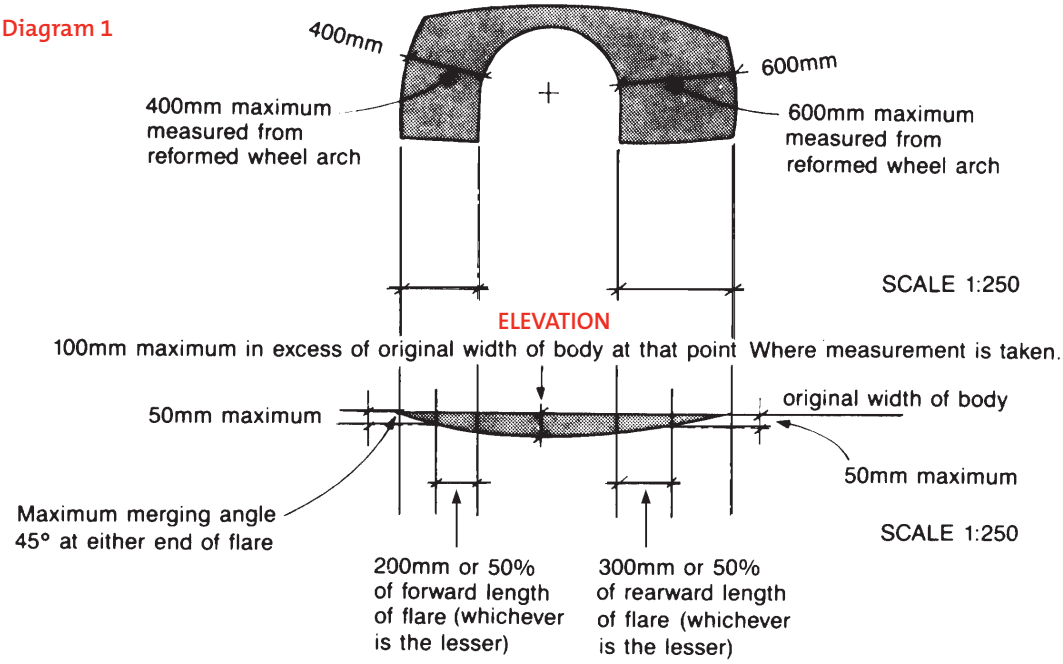

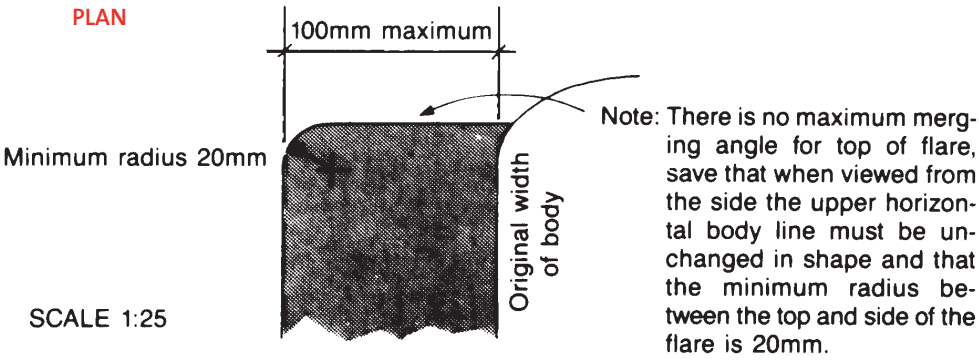

FLARE TOP DETAIL

© Confederation of Australian Motor Sport Ltd. All use subject to Conditions of Use at www.camsmanual.com.au

3.5 Aerodynamic aids:

(i) The use of undertrays, fairings, or other aids to aerodynamic form (including aerofoils) is not permitted unless specifically provided for in these Regulations.

(ii) It is permitted to fit a spoiler or air dam on the front of the car such that no part of it is more than 100mm ahead of the original coachwork at any point.

The bumper must retain its original appearance and location in relation to the unmodified area of the coachwork. However, it may be integral with the air dam and surrounding coachwork.

The bumper or fascia returns may be spread horizontally to merge with the front mudguard flares. No part of the bumper or air dam shall be wider than the widest point of the modified front mudguards (see diagram 2). The shape of the original bumper or fascia may be modified to merge with the air dam below a horizontal plane passing through the centre of the front wheel hubs (see diagram 3).

Air dam undertrays may be installed and used as an aerodynamic aid. No part of the undertray may extend further rearward than the leading edge of the front tyres and must be within the vertical projection of the vehicle, including modified coachwork (tyres must be inflated to a minimum of 1.8 bar pressure).

(iii) It is permitted to fit a rear deck lid spoiler of maximum height 200mm above the coachwork where mounted, and of width not exceeding the width of the coachwork excluding any flaring of the mudguards. It must be fitted contiguously with the rear deck and shall not restrict rearward vision below that required, may not extend rearwards of the rearmost extremity of the coachwork, and must be fitted rearwards of the rear window. It must be fixed in position and not moveable whilst the car is being driven.

In the case of a car which has a hatchback, the spoiler may be fitted rearwards of the centreline of the rear axle.

(iv) Alternatively to (iii) above, it is permitted to fit a rear wing assembly subject to:

(a) It extending no further rearward than 100mm beyond the original coachwork (diagram 3, measurement B).

(b) It extending no further forward than 500mm beyond the rear most point of the original coachwork (diagram 3, measurement E).

(c) The wing element/s have an overall front-to-rear measurement of no greater than 400mm when measured horizontally (diagram 3, measurement C).

(d) Maximum two elements per wing assembly.

(e) The overall width of the wing assembly to be no wider than the coachwork or 1600mm whichever is the lesser when checked at "datum line A" (diagram 2) drawn vertically from the foremost point of the wing chord (diagram 3).

(f) No part of the wing assembly to be higher than a horizontal line drawn from the highest point of the roof (diagram 3, Datum line D).

(v) Aerodynamic aids may not be used for any additional alternative function, eg, for the mounting of an oil radiator.

(vi) It is permitted to fit rear diffuser/undertray assemblies provided they do not extend any wider than the original coachwork, or further rearward than 100mm beyond the original coachwork.

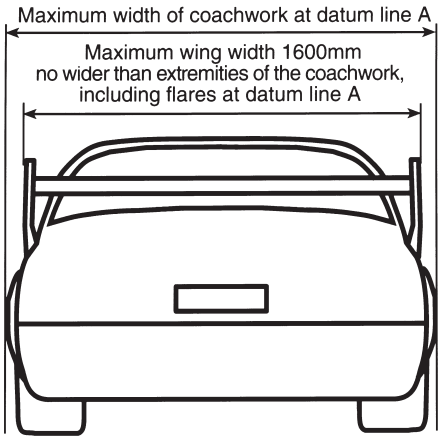

Diagram 2

... continued

© Confederation of Australian Motor Sport Ltd. All use subject to Conditions of Use at *www.camsmanual.com.au*

Diagram 3

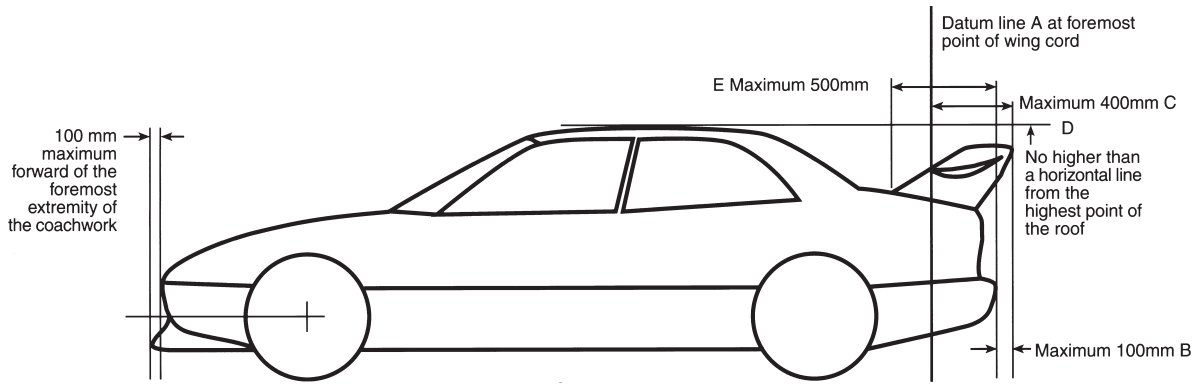

3.6 Body panels:

(i) Body panels, other than those referred to in article 3.6(ii), may be replaced by panels in identical external shape to the original (see 3.11).

(ii) Bonnet and boot lid may be replaced by panels identical in external shape to the original. They may be incorporated into one-piece panels but must be distinguished by a 3mm outline. Resulting panels must be detachable within 30 seconds by two persons for fire response and mechanical inspection. Fasteners necessary for removal must be clearly marked. Any tools required for removal shall be carried on board the car in an easily-accessible location.

(iii) Changes to the shape of the engine cover are permitted where the position of the engine or its actual induction components (excluding brackets, linkages etc) prevents the full closing of a panel of the original shape and size, save that the maximum increase in height must not exceed 100mm, that the lateral clearance of the alterations around the offending components does not exceed 75mm, and that the maximum width does not exceed 450mm. A panel of modified shape must completely cover the part or parts which cause the change to be effected and must have no external openings, except for the purpose of air intake into a sealed airbox, and must not hinder the safe operation of any part of the vehicle, and must not impair the driver's vision.

(iv) **Front doors:** Front doors may be functional and must retain the original external shape. All window regulator mechanisms may be removed. Original front door catches and hinges may be replaced with suitable alternative fittings. Internal anti-theft locks must be rendered inoperative.

Where the front doors are made an integral part of the coachwork, the cockpit must be so configured that the driver must be able to exit the car within "9" seconds by the driver's side, and "11" seconds by the passenger side, starting with the driver's harness fitted and tightened and with the steering wheel, if removable, in place.

(v) **Rear doors:** On four-door cars, the door skins of the rear doors may be made integral with the surrounding bodywork. On cars where the door skins do not extend around the window frame the original appearance and shape of window frame trims must be retained. The rear mudguard flares may extend over part of the surface of the door skin. The area of coachwork under the flare, which may include part of the "C" pillar, may be removed. If the original external door handles on rear doors are removed the resulting aperture must be filled.

(vi) **Scuttle/Plenum or Bonnet to Windscreen Opening:** Where any area of the windscreen and associated lower panel or trim is below the profile of the bonnet as viewed from the front, the windscreen and associated lower panel or trim are free in such area. Where any part of the engine block extends forward of the windscreen, a flame- and liquid-proof panel must be installed to prevent engine fluids or fire from escaping between the windscreen and bonnet.

(vii) **Side Skirts:** It is permissible to fit side skirts to the area between the trailing edge of the front mudguard flare and the leading edge of the rear mudguard flare. The side skirts are a cosmetic addition only and are not to be used for any aerodynamic aid. Such side skirts may not extend below the horizontal plane created by the floor pan of the vehicle.

3.7 Interior:

(i) All interior fittings and/or trim are free.

(ii) When front door trim is removed, it must be replaced with a flush-fitting rigid material, save that local modifications are permitted to facilitate fitment of roll over bar and anti-intrusion bars.

(iii) All windows may be replaced by a suitable rigid transparent material of adequate strength (eg, polycarbonate), which must be of not less than 3mm thickness for side and rear windows, and not less than 6mm thickness for the windscreen, save that the fitment of front side windows is optional.

(iv) All passenger seats in the vehicle may be removed and the space for other than the driver may be encroached. If the original driver's seat is removed, the replacement seat must comply with Schedule C (refer "General Requirements for Cars and Drivers"). The driver's seat may be moved backwards, but the rear of the squab of the seat may not project beyond the vertical plane defined by the front edge of the original rear seat (if fitted) in a standard model.

(v) A crushable structure may be fitted to the outside of the chassis on the driver's side of the vehicle. This shall take the form of a Nomex® or aluminium honeycomb and shall have a minimum thickness of 50mm and a minimum volume of $5dm^3$. This shall be located in the vicinity of the driver's hip, and may be incorporated into the chassis.

© Confederation of Australian Motor Sport Ltd. All use subject to Conditions of Use at *www.camsmanual.com.au*

3.8 For vehicles where the engine has been relocated from the original manufacturer's position, or an alternative engine other than that optioned by the manufacturer, must be fitted with a scatter shield incorporated into the driver's side of the transmission tunnel that extends from the floor level through 120°, and be at least 300mm in horizontal section. Such protection shield may be manufactured from either:

- 6mm-thick mild steel sheet,
- 6mm-thick 5083 aluminium alloy,
- transmission blanket to SFI 14.1 fitted over the clutch housing assembly.

3.9 The front and rear firewall/bulkheads are free, subject to their being flame- and fluid-proof and manufactured from material specified at Article 3.11.

3.10 Floor pan:

(i) The floor pan may either:

(a) remain original, to be known as "floorpan vehicles", or

(b) be replaced by a component whose lower surface is flat and is mounted parallel to the bottom edge of the sill, to be known as "spaceframe vehicles", and complies with the following:

- It may extend no further forward than the leading edge of the sill panel.
- It may not extend further rearward than the trailing edge of the original sill panel.
- It may consist of a number of flat surfaces, all of which must be horizontal when viewed from the front and may only be joined by vertical sections.

Note: on vehicles where the bottom edge of the sill is not a straight line (see (b) above), the lower edge of any replacement floor pan must be parallel to a straight line drawn along the lowest straight edge of the door/s on either side of the vehicle.

(ii) In all cases (original or replacement floor pan), an additional flat surface may be fitted in addition to, or in place of, the original panel work which would normally constitute the boot floor or rear hatch floor. If fitted, this panel must:

- be added to the rear of the trailing edge of the original sill panel or cockpit bulkhead;
- extend no further rearward than the underside of the beaver panel or rear bumper bar assembly (at any point across the width).
- Its leading edge must be parallel to the floor pan or any replacement surface from the side; its lower surface must be parallel to the Note mentioned in 3.10(i).
- Rearward of the centreline of the rear axle it may be inclined at an angle, the maximum of which will necessitate that it meets the underside of the beaver panel or rear bumper bar assembly.
- The lower surface must be the lowest horizontal (or near horizontal) panel of the vehicle.

(iii) It is prohibited to include any vertical or near vertical vanes or other aerodynamic devices into the flat surfaces other than those mentioned in 3.5(vi), 3.10(i) or 3.10(ii).

The creation of any aerodynamic device in the floor pan is prohibited.

Holes are allowed in both the flat surfaces mentioned in 3.10(i) or 3.10(ii) only for mechanical or suspension associated components or attachment purposes, or as otherwise provided in the relevant regulations.

The rear beaver panel and/or bumper bar, whichever is the lower, must remain original in shape and position.

(iv) It is permitted to fit flat panels, parallel to the vehicle sills, to protect the engine and ancillaries from the ingress of debris. Such panels must not extend forward of a vertical plane tangent to the leading edge of the complete front wheel assemblies, nor rearward of a vertical plane tangent to the foremost points of the front doors.

3.11 Material: Replacement, modified and additional body panels where permitted must be manufactured from one of the following:

(i) material of the same gauge and composition as the original part; or

(ii) aluminium, or aluminium alloy, of gauge not thinner than 1.25mm; or

(iii) glass fibre, or glass-reinforced plastic, carbon fibre/Kevlar composite materials of gauge not thinner than 1.5mm.

4. MECHANICAL COMPONENTS

Modifications may be made to the vehicle subject to the following restrictions:

4.1 Brakes:

(i) All cars in circuit races must be fitted with a double circuit braking system so arranged that the pedal normally operates on the four road wheels and, in the event of leakage at any point in the system, the pedal shall still control two wheels on the same axle.

(ii) Only brake disks manufactured from ferrous material may be used.

4.2 Suspension and chassis:

The chassis of the vehicle shall be constructed of either steel tubes (spaceframe construction) or standard metal pressing (floorpan construction) to which is attached the suspension, coachwork, aerodynamic devices and running gear. The chassis shall incorporate a safety cage structure to protect the driver in the event of a collision. Subject to the incorporation of a safety cage with the satisfaction of the strength requirements, the chassis shall be of free design.

The safety cage shall be made from round tubes and shall consist, as a minimum, of the following:

© Confederation of Australian Motor Sport Ltd. All use subject to Conditions of Use at *www.camsmanual.com.au*

(i) A main hoop, being a transversal near-vertical hoop formed from one continuous tube extending down to the top of the tubular chassis (spaceframe construction) or to the floor rails of the chassis (floorpan construction) on each side. It shall be located immediately to the rear of the driver's seat and the top of the hoop shall be at least 50mm above the top of the driver's helmet.

Note: *Attention should be given to the selection of the Defined Car to ensure that sufficient height exists within the coachwork to fulfil this requirement.*

(ii) Lateral half hoops and brace or front hoop and braces, forming the front half of a full cage. The forward pillars must extend down to at least the lower edge of the front window.

(iii) Roof brace, either in the form of a diagonal, cross or vee (refer drawings 253.9a, 253.9b or 253.9c of Schedule J – "General Requirements for Cars and Drivers").

(iv) At least two anti-intrusion bars on the driver's side. These must have a minimum dimension of 38mm diameter and 2.5mm wall thickness. At no point in the door opening shall the cumulative vertical section of the door bars be less than that of the two individual tubes.

(v) All parts of the chassis above the lower edge of the windows shall be regarded as forming part of the safety cage, regardless of whether they are part of the mandatory safety cage as defined in 4.2 above, or optional members. They shall such be subject to the requirements of Schedule J.

(vi) The wheel base and the location of the centrelines of the front and rear hubs shall be within ±100mm of that of the Defined Car.

(vii) The chassis, sub-frame and all body components other than the shape of the external coachwork are free.

(viii) Cars must be so constructed that no part of the car may be less than 40mm above the ground.

(ix) Any electronic control of any part of the suspension is prohibited.

4.3 Transmission: The design of the transmission is free, save for the following:

- The clutch must be controlled exclusively by the driver by either mechanical or hydraulic actuation. The use of any electronic clutch actuation systems is prohibited.
- The gears must be selected by the driver exclusively via a mechanical linkage.
- The use of any electronic, hydraulic or pneumatic gear selection device or assistance is prohibited.
- A gear lever-mounted switch, which must only provide a gear shift cut signal to the ECU, may be fitted.
- Four-wheel drive is permitted on cars originally produced in that configuration, however they must remain in "floorpan" construction and retain the original engine block and cylinder head/s for that particular vehicle model.
- An operable reverse gear must be fitted.
- The maximum number of forward gears shall be six.

4.4 Engines:

(i) Engine and ancillary equipment is free, provided that:

- the engine block is derived from a car eligible under the provisions of Article 2 hereof;
- the road use mass-produced three-rotor rotary engine assembly is acceptable (Mazda 20B);
- all engines must be front mounted;
- it is sourced from a series production vehicle of which at least 2500 examples were built; or,
- it is permitted to use a cylinder block manufactured by an aftermarket supplier provided that:
  - (a) it is an identifiable replacement for a permitted, original equipment cylinder block;
  - (b) the centrelines of the crankshaft, camshaft, and lifter bores are in the same relative positions as per the original equipment cylinder block; and
  - (c) it is made from the same material as the original block.

(ii) Engines mounted in the front (subject to the above) may intrude into the space originally intended for passengers, save that no part of the cylinder block may extend across a line drawn at right angles to the longitudinal axis of the vehicle at a point halfway between the front and rear wheel hub centres.

Attention must be given to the required minimum exit times in selecting engine location (refer 3.6 (iv)).

(iii) To establish total engine capacity.

- A multiplying factor of 1.7 applies to forced induction engines.
- A multiplying factor of 1.75 applies to rotary engines.

(iv) The maximum engine capacities are:

Naturally-aspirated reciprocating	6000cc
Naturally-aspirated rotary engine	3428cc
Forced-induction reciprocating	3529cc
Forced-induction rotary engine	2016cc

5. FUEL

5.1 Only fuel as defined by CAMS may be used (see Schedule G – "General Requirements for Cars and Drivers").

5.2 Where any part of the complete fuel tank is less than 500mm ahead of the rearmost point of the coachwork (excluding the rear wing), it may be required to be protected by a crushable structure of Nomex® or aluminium honeycomb with a minimum thickness of 50mm to the rear, bottom and sides of the fuel tank assembly.

© Confederation of Australian Motor Sport Ltd. All use subject to Conditions of Use at *www.camsmanual.com.au*

6. WHEELS AND TYRES

The maximum width of any complete wheel assembly shall be 370mm, measured with at least 180kPa of pressure in the tyre.

7. ELECTRICAL SYSTEM

The original external shape and location of all lighting and signalling equipment must be retained. If original headlamps and turn indicators are not used, their replacements may be blended with the surrounding coachwork. Where the original headlamps and signalling equipment is removed, suitable decals of original size and location must be used in their place. Front lighting and signalling equipment need not be functional. For vehicles with retractable headlights, the external shape shall be determined to be that attained whilst the headlights were in the parked position. Tail lamps and brake lamps must remain operable, with a minimum power of three Watts for tail lights, and minimum 20 Watts for brake lights.

A high-intensity rain light must be fitted to all vehicles to the upper rear lip of the boot lid as close to central as practical. This must be lighted for any race declared wet.

8. RACING WEIGHTS

up to 1300cc	680kg
1301 – 1600cc	730kg
1601 – 2000cc	780kg
2001 – 2500cc	800kg
2501 – 3550cc	900kg
3551 – 4500cc	975kg
4501 – 5100cc	1050kg
5101 – 6000cc	1125kg

Front-wheel drive:	subtract 50kg from the above weights
Multi-valve vehicles:	add 75kg to the above weights for vehicles above 2501cc swept volume
All four-wheel drive vehicles:	add 50kg to the above weights

Note: These are minimum racing weights for rear-wheel drive vehicles, and include the driver.
These weights may be revised by CAMS.

COMMODORE CUP

The technical regulations for Commodore Cup, which are to be read in conjunction with Group 3D, are approved by CAMS and are available from the Commodore Racing Association.

© Confederation of Australian Motor Sport Ltd. All use subject to Conditions of Use at *www.camsmanual.com.au*