RALLY / ROAD

CAMS Group N (P) Rally Cars

Technical & Recognition Regulations

1. PREAMBLE

The CAMS Group N (P) Rally Car regulations are intended to provide the opportunity for the following:

- increased manufacturer participation in the Australian Rally Championship (ARC)
- to provide a category that will permit such manufacturer involvement in the ARC at a reasonable cost
- to increase the number of competitors in newer vehicles and
- in the case of the two-wheel drive sub-category, provide the potential to be competitive in outright national competition.

There will be two sub-categories, these being Four Wheel Drive (4WD) and Two Wheel Drive (2WD). The following regulations will permit manufacturers which do not have FIA Group N-homologated vehicles in their model range to modify their existing models in order to fit components which shall make the vehicle suitable for rally competition. This may include the conversion of 2WD models to 4WD. Only modifications providing a performance level compatible with current FIA Group N homologated two-litre 4WD supercharged vehicles will be permitted. The 2WD category regulations allow greater freedoms than the 4WD category.

The principle of parity between Group N (P) Rally Cars and FIA-homologated Group N vehicles is paramount. Manufacturers of Group N (P) Rally Cars must be aware of and accept that parity adjustments will be made if the performance of these vehicles, or an individual make/model so warrants, at ARCom's sole discretion. The use of inlet air restrictors and vehicle weights shall be the primary, but not necessarily exclusive, means of effecting parity adjustments. The interests of manufacturers with FIA-homologated Group N vehicles will be considered at all times.

The manufacturers of Group N (P) Rally Cars shall make vehicles available for inspection at any time upon request of ARCom or the CAMS Secretariat, by any party deemed appropriate by ARCom. Manufacturers of Group N-homologated vehicles shall be considered as interested parties and will be provided with access to information relating to the specifications of each Group N (P) vehicle, and their representatives may be invited by ARCom to inspect Group N (P) vehicles during the initial construction process.

All vehicles shall be production orientated in the appearance of their bodywork. Wherever possible, the use of original equipment manufacturer parts, available at reasonable cost from the manufacturer, will be required, although modifications to these parts or the body shell will be permitted where this is necessary solely for fitment purposes. Manufacturers shall ensure that Group N (P) rally cars produced by them are able to be issued with appropriate civil documentation (eg. registration, rally permit etc) to enable the vehicle to be legally driven on public roads.

Any further adaptation of the rules and/or recognised vehicles shall be considered in light of the philosophy outlined in this preamble. The use of variant options to the recognised vehicle will be controlled.

Where these Group N (P) regulations are silent, Group N regulations shall apply. Any modification which is not specifically permitted in these regulations, or a variation which is not specifically accepted by CAMS and detailed in the Recognition Form (inclusive of variant options) is prohibited.

For the purposes of classification at events, Group N (P) shall be combined with Class N4.

CAMS reserves the right to amend these regulations at any time.

2. DEFINITIONS

- **ARC** – Australian Rally Championship
- **ARCom** – Australian Rally Commission
- **Base vehicle** – the model of car that is being used by a manufacturer to construct a Group N (P) Rally Car.
- **CAMS** – Confederation of Australian Motor Sport Ltd
- **CAMS Secretariat** – the CAMS Rally Manager, or other CAMS staff delegated by the CAMS Rally Manager.
- **Donor vehicle** – a donor vehicle shall be considered any Group N-homologated vehicle, the components of which are being used to construct a Rally Car, recognised by CAMS as a donor vehicle. The recognised donor vehicle shall be specified on the Recognition Form.
- **Manufacturer** – the maker of the model and family of car. The term "manufacturer" shall include the "manufacturer agent" unless otherwise specified in these regulations.
- **Manufacturer Agent** – where a Group N (P) Rally Car is being constructed by an organisation associated with, but other than the manufacturer, and provided that the manufacturer declares that organisation to be representing him for the purposes of the Group N (P) Rally Car, CAMS shall recognise that organisation as the

© Confederation of Australian Motor Sport Ltd. All use subject to Conditions of Use at *www.camsmanual.com.au*

manufacturer agent. Only one manufacturer agent will be recognised by CAMS for each manufacturer.

- **Manufacturer "parts bin"** – parts which are available as standard replacement items from the manufacturer's spare parts network for a vehicle of which at least 2500 units have been made. Such parts need not necessarily be those specific to the base or donor vehicle.
- **OE** – original equipment
- **Group N (P) Rally Car Technical Working Group** – The group appointed by ARCOM for the purpose of providing advice to CAMS in relation to acceptable specifications for a Group N (P) Rally Car which will, when adopted, be detailed in the Recognition Form.
- **Recognition Form** – a document which, when approved by CAMS, details the permitted specification of a Group N (P) Rally Car.
- **Recognised components** – all non-original components being utilised in the Group N (P) Rally Car which are specified in the Recognition Form.
- **Supercharging** – increasing the weight of the charge of the fuel-air mixture in the combustion chamber (over the weight induced by normal atmospheric pressure, ram effect and dynamic effects in the intake and/or exhaust systems) by any means whatsoever.

  The injection of fuel under pressure is not considered to be supercharging. In case of supercharging, the nominal cylinder-capacity will be multiplied by 1.7 for petrol engines and the car will pass into the class corresponding to the fictive volume thus obtained.

  The car will be treated in all respects as if its cylinder-capacity thus increased were its real capacity. This shall particularly be the case for assigning the car (where appropriate) to its cylinder-capacity class, its interior dimensions, its minimum number of places, its minimum weight, etc.
- **Variant option** – A document detailing specification/s permitted in addition to the Recognition Form.

3. RECOGNITION

3.1 Group N (P) Rally Cars: The Recognition Form is the official certification made by CAMS that the Group N (P) Rally Car variant of a model of a specific car, not previously homologated, has been made in sufficient series production numbers and meets the requirements of the present regulations. Any application for recognition must be lodged with CAMS by the manufacturer of the model of vehicle. CAMS must be supplied with a detailed plan of the vehicle to be built in compliance with the regulations for this category. Approval in principle must be obtained from CAMS before any production work is started and such approval in principle shall give rise to the drawing up of a Recognition Form (see hereinafter).

If it has never before been registered in this Championship and wishes to have recognised a Group N (P) Rally Car, the manufacturer may commit to its participation in a limited number of events, according to the following principle:

first year:	no less than 50% of events (or, if the ARC series is past the 50% stage, the remainder of the ARC)
second year:	no less than 100% of events.

Recognition will only be granted to car models which are still in production on January 1st of the year preceding the one for which the present regulations are valid, or the production of which was started after that date. Recognition of a series-produced model will lapse seven years after the date on which the series production of the said model ceased.

Recognition in this category is also available to any manufacturer with a 4WD two-litre supercharged Group N rally car with current FIA homologation, but only if there is at least one FIA-homologated 4WD two-litre supercharged Group N car registered by that manufacturer for the Australian Rally Championship, or is otherwise specifically approved by CAMS. However, an FIA Group N-homologated 4WD two-litre supercharged vehicle cannot be used as the base vehicle for Group N (P) Recognition.

A unique chassis number must be punched on a structural part of each car produced, in a location noted on the Recognition Form.

3.2 Model of car: All the identical cars belonging to a family (see below) and a production series distinguishable by an identical conception and identical external general lines of the coachwork, and by an identical mechanical conception of the engine and the transmission to the wheels. At least 2500 cars must have been produced of that model. For a same model, the materials of the front and rear bumpers, boot lid, engine bonnet and front wings must remain identical.

The bumpers of cars derived from the same model may not include any adjustable parts.

The minimum length of these cars is 3.750 m and the minimum wheelbase is 2.440m

3.3 Family of car: Different series models belonging to one and the same production series of the same manufacturer. The wheelbase and material of the bodywork/shell (including the doors) must remain identical. The materials of the front and rear bumpers, the boot lid, the engine bonnet and the front wings may differ according to the model. The minimum length of these cars is 3.750m.

All models must be available through the normal commercial channels of the manufacturer.

The general external lines of the bodywork may vary only in the following details:

© Confederation of Australian Motor Sport Ltd. All use subject to Conditions of Use at *www.camsmanual.com.au*

shape of front and rear bumpers
removable aerodynamic devices (spoilers, wings, sill mouldings)
control and comfort equipment (sun roof, auxiliary lamps, door handles, exterior mirrors)
decorative strips and mouldings
left- and right-hand drive versions
two- and four-door versions, provided that these differ only with regard to the doors, door openings and B-pillar

4. SUBMISSION OF APPLICATIONS

4.1 Conditions: Any application for recognition may only be submitted to CAMS if that manufacturer has established a written declaration by which he undertakes to abide by the specifications of the recognition regulations (see example of this declaration appended to the present regulations).

The declaration must be submitted to CAMS when the first application for each recognition is submitted.

This written declaration must be made in the name of the manufacturer of the car for which the application for recognition is submitted, and must be signed by the person/s legally authorised in Australia, or the home country of the manufacturer, to sign officially on behalf of the manufacturer.

By doing so, the manufacturer pledges to abide by the rules of CAMS.

Should any of the prescriptions not be observed, CAMS may impose any of the penalties provided for in the National Competition Rules.

4.2 Recognition applications: Forms for recognition applications are available from CAMS National Office.

Four (4) copies of each application shall be sent to:

Rally Manager
Confederation of Australian Motor Sport Ltd
PO Box 147
Caulfield East, Vic, 3145

Each application shall include photographs or prints.

Providing they are received at least two weeks prior to such a meeting, applications shall be considered at the next meeting of ARCom, at latest. However ARCom may at its sole discretion decide to consider applications at other times.

4.3 Authentication of recognition: A Bulletin will be released listing the recognition applications approved at the said meeting.

For any applications accepted with conditions, the recognition will not be effective until the first of the month following the receipt and approval by the CAMS Secretariat of all supplementary information required, unless otherwise approved by ARCom. Photographs which are missing or which are to be changed may be submitted separately (four copies), but all other information must be sent to the Secretariat in the form of corrected pages of the registration form (four copies).

4.4 Variant options: During the first full year of competition, a manufacturer of a Group N (P) Rally Car may introduce up to six variant options. In each subsequent year the maximum permissible number of variant options may be reduced, at the sole discretion of ARCom. In the first full year of competition for each manufacturer, there will be no limit to the number of changes that may be contained within one variant option submission. In subsequent years the maximum permissible number of changes that may be contained within one variant option may be reduced, at the sole discretion of ARCom.

No variant option shall take effect until it has been considered and approved by ARCOM and published as a Variant Option (VO) document.

5. PRODUCTION CRITERIA

5.1 Minimum production quantity of Group N (P) Rally Cars.

5.1.1 In its first full year of competition in this Group, the minimum production quantity is one completely assembled vehicle.

5.1.2 No later than the conclusion of the second year of registration for competition in the ARC, the manufacturer must make the basic vehicle available in kit form for sale to other Australian Rally Championship Super Series Competitors. These vehicles will not, at least in the short term, be approved for use in events other than the ARC Super Series.

5.1.3 The manufacturer must manufacture and provide the following:

(a) rolling bodyshell with fully integrated and CAMS-homologated roll cage including all engine-transmission and suspension mounting points in compliance with the Recognition Form, and

(b) all bodywork panels required to complete the vehicle in accordance with the Recognition Form.

The manufacturer must also provide an exhaustive list of suppliers of all other main recognised parts (engine, transmission, suspension, brakes, steering, composite parts, aerodynamic devices, etc).

5.1.4 The manufacturer must make a minimum of one vehicle (as specified in 5.1.2) available for sale to comply with this clause.

© Confederation of Australian Motor Sport Ltd. All use subject to Conditions of Use at *www.camsmanual.com.au*

5.1.5 The price of this vehicle shall not exceed AUD$120,000 in kit form, or $150,000 (prices are inclusive of GST) if complete and ready to compete.

5.1.6 The manufacturer must guarantee supply of recognised parts, as documented in its Recognition Form for the life of the vehicle. Such parts must be able to be procured by all Competitors of such vehicles within time frames deemed reasonable at the sole discretion of ARCom.

5.2 Use of Specified Parts:

5.2.1 All the parts specified in the "Group N (P) Rally Car" Recognition Form must be used unmodified and all parts specified must be utilised in their entirety.

6. CHECKS AND ADDITIONAL INFORMATION

CAMS will arrange inspections concerning the number of cars and kits and their conformity with the Recognition Form. CAMS/ARCom will act on advice from the Group N (P) Rally Car Technical Working Group as appropriate.

CAMS may charge an additional fee should more than one inspection be deemed necessary in respect of a car or its recognition.

CAMS reserves the right to check existing recognitions, and for this purpose may ask the manufacturer for additional information. Should it be established that any false or erroneous declarations have been made, ARCom may suspend and/or cancel the recognition concerned and impose other sanctions on the manufacturer involved, including but not limited to the refusal to consider other recognition applications for a given period, the imposition of a fine, etc.

Vehicles made available under Article 5.14 shall be subject to inspection prior to or during assembly. All vehicles must be have been subject of inspection prior to issuance of a CAMS vehicle log book.

7. CORRECTION OF A RECOGNITION FORM

Should it be found that a Recognition Form contains specifications which are inaccurate or do not comply with the prescriptions of the present regulations, such form shall be corrected.

Each correction shall, when approved by ARCom, be published as a CAMS Bulletin, and shall be valid from the first of the following month, unless ARCom approves an earlier implementation date. Notwithstanding this procedure, any obvious (eg, drafting/typographical) errors having no effect on the performance of the vehicle may be corrected directly by the CAMS Secretariat with immediate effect.

8. TECHNICAL LIMITATIONS OF THE MODIFICATIONS

8.1 General guidelines:

8.1.1 All major components nominated for the Group N (P) Rally Car must be detailed to and recognised by CAMS.

8.1.2 The use of titanium and magnesium is completely forbidden, save where the part was standard on the Base Vehicle or where specifically permitted by these regulations.

8.1.3 Where the replacement of components is permitted by these present regulations, the use of composite material (eg, carbon fibre) is permitted but if used, every such use must be nominated in the Recognition Form.

8.2 Bodywork - Bodyshell:

- **2WD bodyshell:**

8.2.1 The bodyshell and doors must be original shape and material as used in the Base Vehicle, without the removal of any material (unless specifically permitted by these regulations and noted in the Recognition Form).

8.2.2 All other bodywork such as bonnet, boot, bumper faces, etc must be the original shape save where modifications are permitted by these present regulations; but material shall be the original, aluminium, fibreglass, carbon fibre or Kevlar provided the components are made available to all competitors by the manufacturer. In the case of carbon fibre or Kevlar, only one layer of fabric may be fixed to the visible face of the part.

- **4WD bodyshell:**

8.2.3 The bodyshell and bodywork panels must be original in every way, save where modifications are required and/or permitted below.

8.2.4 The absolute minimum of modification required to allow fitment of the authorised parts from the donor vehicle to the bodyshell is permitted, including the flaring of guards/wings. These modifications must be clearly detailed in the recognition form presented to ARCom. See 8.2.8.

8.2.5 Aerodynamic devices:

(a) All vehicles may be recognised with front and/or rear aerodynamic devices, which shall be deemed to be the "aero kit".

(b) An aero kit may only be used if recognised for that vehicle by CAMS. If an aero kit is recognised, it must be fitted in its entirety at the start of each competition.

(c) The aerodynamic device/s, front or rear, must comply with the following:

(i) **Front aerodynamic device (2WD & 4WD):** The front aerodynamic device may be manufactured from the original material, aluminium, fibreglass, carbon fibre or Kevlar provided the components are made available to all competitors by the manufacturer. In the case of carbon fibre or Kevlar, only one layer of fabric may be fixed to the visible face of the part.

© Confederation of Australian Motor Sport Ltd. All use subject to Conditions of Use at *www.camsmanual.com.au*

The shape is of free design, subject to:

no part being rearward of vertical plane passing through the axis of the front wheels*;
no part being lower than a horizontal plane passing through the lowest point of the door opening of the family of vehicle*; and
no part being forward of the foremost point of the front bumper of the base vehicle.
The material of the bumper must remain unchanged (plastic remaining plastic, including composite materials).
All safety elements allowing the absorption of impacts between the bumper and the chassis must be retained.
The lower part of the front protective moulding may be detachable.
No element of this detachable part may protrude beyond the upper part, when seen in vertical projection.

**Refer diagram 1.*

However, it is permitted to make openings in the parts situated between the bumper and the chassis, as described in the Recognition Form and for the sole purpose of installing any heat exchanger. In such case, the structural resistance of the parts which have been modified must be restored.

One or more openings may be made in those areas of the bumper which are situated above the horizontal plane passing through the lowest point of the door opening of the family of vehicle, but the total horizontal projection of all additional openings in the bumper must be not exceed 2500cm² or alternatively not exceed that of the base vehicle.

Any openings made in the bumper must not affect the structural integrity of the bumper, or its attachment to the body.

The free lower part of the front aerodynamic device must not protrude in relation to the upper part, when seen from a vertical projection.

The total height of the protective moulding must not be reduced by more than 60mm when the detachable part is removed. The maximum height of this detachable part is 100mm. *Refer diagram 2.*

Two alternative detachable parts may be homologated as an integral part of the protective moulding. This part must not be adjustable and the rigidity of it and of its attachment must be at least equal that of the protective moulding.

No detachable part may, under any circumstances, generate a new opening. Any opening in the surface of the protective moulding must in no case be modified, whatever its configuration.

(ii) **Rear aerodynamic device**: There rear aerodynamic device, should one be recognised, shall be of single plane/element design and shall not be adjustable from within the cockpit. Adjustments may be effected only with tools.

The rear aerodynamic device of vehicles which are of sedan type (ie, three volume) configuration shall comply with the dimensions outlined in 8.2.5(iii) and (iv) below. The rear aerodynamic device of vehicles which are of hatchback type (ie, two volume) configuration shall respect the same dimensions in 8.2.5(iii) and (iv) below, but at its top most point shall be not more than 25mm above the roof.

At its lateral extremities, the rear aerodynamic device must join the bodywork, and it must be entirely contained within the frontal projection of the car without its rear-view mirrors.

The material of construction for the rear aerodynamic device is free save that no carbon fibre, Kevlar or titanium may be used.

(iii) **Rear aerodynamic device (2WD):** The rear aerodynamic device for 2WD Group N (P) Rally Cars shall fit within an imaginary box of the following dimensions:

Width	1360 mm maximum
Height	290 mm maximum
Horizontal length of side plate at top	190mm maximum
Horizontal length of side plate at base	450mm maximum
The base of the imaginary box shall be rectangular, with a maximum dimension of 1360mm x 450mm.	

Refer diagram 3.

(iv) **Rear aerodynamic device (4WD):** The rear aerodynamic device for 4WD Group N (P) Rally Cars shall fit within an imaginary box of the following dimensions:

Width	1280mm maximum

© Confederation of Australian Motor Sport Ltd. All use subject to Conditions of Use at *www.camsmanual.com.au*

Height	200mm maximum
Horizontal length of side plate at top	190mm maximum
Horizontal length of side plate at base	350mm maximum
The base of the imaginary box shall be rectangular, with a maximum dimension of 1280mm x 350mm.	

Refer diagram 4.

8.2.6 All glass areas, windscreens and door windows must be original and operational.

8.2.7 Roof vents are permitted in accordance with Rule 3.11 of the regulations for PRC (refer "Rally/Road" in the CAMS Manual of Motor Sport).

8.2.8 Wheel arch opening flares may be modified as necessary to cover the complete wheel after any wheel and track changes permitted within these rules are made, subject to being included in the Recognition Form. See 8.2.4.

8.2.9 Alterations to the floor pan, front bulkhead (firewall) and inner wheel housing may be made, but only to the absolute minimum required to achieve the fitment of recognised engine, transmission and suspension components. The extent of these changes must be included in the draft Recognition Forms submitted to CAMS.

8.2.10 Bodywork:

Wings and bumpers (2WD): It is permitted to increase the width of the bodywork up to a maximum of 1770mm (measured at the level of the centre-line of the wheels). This increase may be obtained by means of an extension or a new part. The lateral part of the front and rear bumpers must follow the volume of the wing (eg, guard, fender). The making of new inner and outer wheel arches is authorised. The suspension housings, side members, any subframes and mounting points must remain in conformity with the regulations for Group 3C – Production Rally Cars (PRC).

Each original mounting point of the front subframe may be moved within a sphere of a maximum diameter of 100mm of its original location if this is made necessary through the modification of the tunnel.

Save where permitted under 8.2.5, only the lateral parts (ie, those parts which wrap around the side of the vehicle) of the front bumpers, which must follow the volume of the wing, may be modified. A new rear bumper may be recognised, if only its lateral parts are modified, the material remaining as original.

The material of the wings and wheel arches must remain original.

These wings and wheel arches must not give rise to any additional aerodynamic effect.

The surface of the wings recognised must be continuous, with no air intakes or outlets.

Wheel arches/bulkheads (2WD): The wheel arches may be modified in order to house the permitted wheel/tyre combination.

The bulkhead separating the engine from the cockpit may be modified in order to allow the movement of the wheel, tyre and attached suspension components in their normal travel; a precise plan must be provided.

These wheel arches must be recognised in the Recognition Form, as must any cut-outs in the sheet metal, but the crossrails and side members must under no circumstances be modified or cut, other than as provided in the next sentence.

However, within the context of the freedom of the wheel arch, it is permitted to partially cut the upper side rail at the level of the wheel arch. This cut-out side rail must be reconstituted in such a way as to ensure that the resistance of the car in case of impact is at least equal to the original resistance.

Grille-covered opening in the engine bonnet (2WD and 4WD): Any opening in the bonnet must be no larger than, and the same shape as the original opening in the bodywork of the donor vehicle or that of another Group N or CAMS recognised vehicle . In the opening made in the bonnet, it is permitted to add a plastic part serving as trim. The maximum vertical height of this trim in relation to the bonnet is 15mm.

Rear doors: For four-/five-door models, localised modifications of the rear doors will be authorised to provide clearance for the movement of the wheel, tyre and attached suspension components in their normal travel.

8.3 Engine compartment:

8.3.1 The orientation of the engine may be changed between longitudinal and transverse or vice versa.

8.3.2 Only such modifications to the engine compartment are permitted as will enable installation of the engine / transmission recognised for that Group N (P) Rally Car. Such modifications must not weaken the structure of the original engine bay. Any required modifications shall be recognised in the Recognition Form

8.3.3 Only such modifications to the front firewall are permitted as will enable installation of the engine / transmission recognised for that Group N (P) Rally Car. Such modifications must not weaken the structure of the original bulkhead/firewall. Any required modifications shall be recognised in the Recognition Form.

8.4 Cockpit:

8.4.1 **Seats:** The front seats may be moved backwards but no part shall extend beyond the vertical plane defined by the front edge of the original rear seat.

© Confederation of Australian Motor Sport Ltd. All use subject to Conditions of Use at *www.camsmanual.com.au*

The datum point of each front seat shall be the seatback ignoring any headrest if fitted or, if a headrest is incorporated in the seat structure, by the rearmost point of the crew member's shoulders.

The driver's and passenger's seats shall be replaced by others complying with the FIA 8855–98 or 8855-1999 standard only. The rear seats may be removed.

8.4.2 Should the fuel tank be installed in the boot, a fireproof and liquid-proof bulkhead must separate the cockpit from the fuel tank.

In the case of twin-volume cars where a fuel tank or elements of the fuel system are installed in the luggage compartment, it will be required to install a non-structural partition wall in transparent, non-flammable plastic between the cockpit and the tank arrangement. A fireproof and liquid-proof case must surround the fuel tank and its filler holes.

For three-volume cars, a fireproof and liquid-proof bulkhead must separate the cockpit from the fuel tank. Nevertheless, it is recommended that this liquid-proof bulkhead be replaced by a liquid-proof case as for twin-volume cars.

8.4.3 **Dashboard:** The dashboard and the central console must remain original.

8.4.4 **Doors - side trim:** It is permitted to remove the soundproofing material from the doors, provided that this does not modify the shape of the doors.

It is permitted to remove the trim from the doors together with the side protection bar in order to install a side protection panel which is made from composite materials, provided that replacement side protection material is installed.

In the case of a two-door car, the trim situated beneath the rear side windows may also be removed but must be replaced with panels made from composite material.

The minimum configuration of the door's side protection panel must comply with that shown in diagram 5.

The minimum height of this panel must extend from the base of the door to within 75mm (or less) of the lowest extremity of the window opening in the door.

It is permitted to replace electric window winders with manual winders.

8.4.5 **Floor:** Carpets are free and may thus be removed.

8.4.6 **Other sound proofing materials and trim:** Other padding materials, except for those mentioned under Articles 8.4.4 (Doors) and 8.4.3 (Dashboard), may be removed.

8.4.7 **Heating system:** The original heating system must be retained.

8.4.8 **Air conditioning:** May be added or removed.

8.4.9 **Steering wheel:** Free; the anti-theft device and air bag (if fitted) may be removed.

Vehicles may be either left- or right-hand drive, regardless of the arrangement depicted in the Recognition Form. It is encouraged that vehicles be left hand drive.

8.4.10 A roll cage shall be fitted and must comply with FIA Group N specifications. The CAMS-homologated roll cage design for each vehicle shall be included in the Recognition Form.

8.4.11 In a two volume car, any removable rear window shelf may be removed.

8.4.12 **Air pipes:** Air pipes may only pass into the cockpit if these serve only as ventilation of the cockpit.

8.4.13 **Additional accessories:** Subject to 8.4.7 above, all internal accessories which have no influence on the car's behaviour are allowed, for example equipment which improves the aesthetics or comfort of the car interior (lighting, heating, radio etc.).

In no case may these accessories increase the engine power or influence the steering, transmission, brakes, or road holding even in an indirect fashion.

All controls must retain the role laid down for them by the vehicle manufacturer.

Controls may be adapted to facilitate their use and accessibility, for example a longer handbrake lever, an additional flange on the brake pedal etc.

The following modifications are permitted:

(a) Measuring instruments such as speedometers etc may be installed or replaced, and possibly have different functions.

Such installations must not involve any increased exposure to danger for competing crews or have any direct influence on the performance of the vehicle.

However, the speedometer may not be removed, if the supplementary regulations of the event or civil regulations prevent this.

(b) The horn may be changed or an additional one added, the controls of which may be placed within reach of the passenger.

(c) Circuit breakers and electrical controls fitted to the steering column may be freely changed vis-à-vis their use, position, or number in the case of additional accessories.

(d) A hydraulic hand brake is not permitted. However, this may be reviewed should an FIA Group N two-litre 4WD supercharged model be homologated with such a hand brake.

(e) Additional compartments may be added to the glove compartment and additional pockets in the doors provided they use the original panels.

(f) Insulating material may be added to the existing bulkhead to protect the passengers from fire, heat and/or fluids.

8.4.14 A spare wheel/s is compulsory. The spare wheel must be securely fixed, and may not be installed in the

© Confederation of Australian Motor Sport Ltd. All use subject to Conditions of Use at *www.camsmanual.com.au*

space reserved for the occupants of the vehicle. No exterior modification of the bodywork must result from this installation.

8.4.15 Harnesses: All vehicles must be fitted with a Type A safety harness for each occupant in compliance with FIA standard 8853/98 or 8854/98.

8.5 Group N (P) 2WD Engine and Transmission:

8.5.1 Engine:

8.5.1.1 The engine block and cylinder head(s) must be from a family of car produced by the manufacturer.

The maximum engine capacity shall be 6.0 litres, inclusive of relevant rotary engine and/or supercharging equivalence factors.

Note: the term supercharged/ing includes turbocharging under CAMS and FIA regulations.

8.5.1.2 All other engine parts and/or modifications are free, subject to 8.1.1 and the following:

(a) The maximum number of cylinders must be the same as fitted to the vehicle model by the manufacturer.

(b) The number and location of camshafts and valves must be the same as the number and location fitted to the recognised engine. The profile of the camshaft/s is free.

(c) Natural induction or supercharging is permitted.

In case of supercharging, the nominal cylinder capacity shall be multiplied by 1.7 and the car will pass into the class corresponding to the equivalent volume thus obtained. The car shall be treated in all respects as if its cylinder capacity thus increased were its real capacity class.

(d) Any supercharged engine must be fitted with a restrictor as specified below:

- All the air necessary for feeding the engine must pass through a restrictor which must respect the following:
- The maximum internal diameter of the restrictor shall be 36mm and this diameter shall be maintained for a minimum distance of 3mm measured downstream of a plane perpendicular to the rotational axis situated at a maximum of 50mm upstream of a plane passing through the most upstream extremities of the wheel blades *(see diagram 6)*.

This diameter must be complied with, regardless of the temperature conditions.

The external diameter of the restrictor at its narrowest point must be less than 42mm, and must be maintained over a distance of 5mm to each side.

The mounting of the restrictor on to the turbocharger must be carried out in such a way that two screws have to be entirely removed from the body of the compressor, or from the restrictor, in order to detach the restrictor from the compressor.

Attachment by means of a needle screw is not permitted.

For the installation of this restrictor, it is permitted to remove material from the compressor housing, and to add material, for the sole purpose of attaching the restrictor on to the compressor housing.

The heads of the screws must be pierced so that they can be sealed.

The restrictor must be made from a single homogeneous piece of material and, in addition to the airflow control orifice, maybe pierced solely for the purpose of mounting and sealing, which must be carried out between the mounting screws, between the restrictor (or the restrictor/compressor housing attachment), the compressor housing (or the housing/flange attachment) and the turbine housing (or the housing/flange attachment). *Refer diagram 6.*

(e) **Supercharging boost pressure** is free.

(f) **Supercharger:** Where fitted, there shall be one single supercharger, with single stage compression and expansion, and must not have variable pitch nor variable geometry. The supercharger must not exceed the impeller and turbine wheel dimensions specified in the following diagram. The supercharger shall be specified in the Recognition Form.

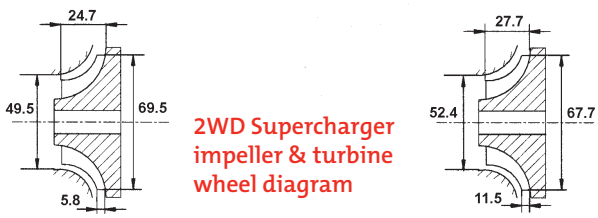

2WD Supercharger impeller & turbine wheel diagram

Impeller wheel

Turbine wheel

(g) **Intercooler:** Any intercooler shall be specified in the Recognition Form.

(h) **Water injection and spraying:** The spraying of water onto the intercooler is free, as is water injection into the intercooler and/or the intake manifold. Any such arrangements shall be specified on the Recognition Form along with the water reservoir position and capacity.

(i) **Air injection:** Injecting air into the exhaust manifold is permitted for supercharged engines only.

(j) **Intake manifolds:** Intake manifold/s are free except that variable geometry is prohibited unless fitted as original equipment on the recognised engine. If variable geometry is fitted to the inlet manifold, it may be disconnected or otherwise rendered inoperative.

© Confederation of Australian Motor Sport Ltd. All use subject to Conditions of Use at *www.camsmanual.com.au*

(k) **Exhaust manifolds** are free.

(l) **Cylinder head cover:** If, and only if, the recognised engine is fitted with a cylinder head cover of plastic or composite material, it is permitted to replace the cover by another made entirely from aluminium alloy, subject to any such replacement being identical in shape and not inferior in weight to the original cover.

(m) **Bearing sizes:** The make and material of engine bearings are free, however, they must be of the original type and dimensions.

(n) **Connecting rods:** Free, subject to being within 10% of the original weight.

(o) **Valve timing and valve lift:** Variable valve timing and valve lift systems are prohibited, unless fitted as original equipment to the engine in question. If variable valve timing and/or valve lift mechanism is fitted to the engine, it may be disconnected or otherwise rendered inoperative.

(p) **Cooling:** The position and size of the radiator may be modified from that fitted to the base vehicle and shall be noted on the Recognition Form.

(q) **Injection/carburettors:** The fuel injection system or carburettor/s are free. A carburettor may thus be changed for another or for an injection system; a monopoint injection system may be changed for multipoint injection, or vice versa. Injectors mounted on the cylinder head in the original model may be moved by recognition of the manifolds. Only the injection/carburettor system outlined on the Recognition Form may be used.

(r) **Lubrication:** Lubrication by dry sump is forbidden. The oil pump must be a single stage pump. Both the suction aperture and the oil sump filter must be fixed below the axis of the crankshaft when the engine is in the position in which it is mounted in the car.

8.5.2 Transmission:

(a) The source of the transmission is free. The transmission must be recognised by CAMS and noted in the Recognition Form. The transmission is limited to six forward speeds plus reverse.

In considering the recognition of a transmission, CAMS will require costings of the parts proposed to be used in the transmission. At its sole discretion, CAMS may deem a transmission to be too costly to be compatible with the philosophy of the category.

(b) Transmission casings may not be manufactured from magnesium. Sequential shift gearboxes are permitted. Gear ratios are free.

(c) The flywheel and clutch assembly are free provided the clutch does not use any carbon fibre or titanium parts.

(d) Save for the above, the transmission, including gearbox, transfer case, differential, drive shafts, tailshafts and joints are free, provided their operation is not made active by way of hydraulic and/or electric controls.

It is permitted to change the location of the driven axle from front to rear, or vice versa.

8.6 Group N (P) 4WD Engine & Transmission:

8.6.1 Eligible engines and transmissions: Manufacturers may select an engine and transmission for recognition from one of the following options:

Option 1

Select any engine of 2000cm³ maximum swept volume in their range and then source parts from any of the manufacturer's own family of cars from around the world (must be of the same brand) to convert the vehicle into a Group N (P) 4WD Rally Car. Components in compliance with Articles 8.6.3 & 8.6.4 may be used. Recognised components shall be specified on the Recognition Form.

Any manufacturer wishing to pursue this option is required to submit a written proposal to CAMS for approval prior to commencement of the build project.

Option 2

Select any engine of 2000cm³ maximum swept volume in their range and then select a transmission in total (the drive-train less the engine) from an FIA-homologated two-litre 4WD supercharged Group N vehicle (eg, Subaru WRX or Mitsubishi Evo). Components in compliance with Articles 8.6.3 & 8.6.4 may be used. All recognised components shall be specified on the Recognition Form.

Option 3

Select a complete engine of 2000cm³ maximum swept volume and transmission (ie, a complete drive-train) from an FIA-homologated two-litre 4WD supercharged Group N vehicle. Components in compliance with Article 8.6.2 of these present regulations and where not in conflict, 8.6.3, may be used. All recognised components shall be specified on the Recognition Form.

The following items must be the same size as fitted by the manufacturer of the selected donor vehicle when utilising Option 3, or otherwise be no greater than the size fitted to any vehicle with a current or previous Group N homologation:

(a) Front engine exhaust pipe, from turbo housing to the first joint.

(b) The internal sizes of the throttle body and butterfly.

(c) Intercooler pipes internal diameter.

8.6.2 Components: For Option 3, the following unmodified and complete components from the chosen donor vehicle must be utilised:

(a) The turbocharger complete, including the wastegate actuator and the exhaust housing.

(b) Intercooler radiator.

(c) Air intake system complete including hoses, airbox, and filter. It must retain original air intake system, or the intake pipe size shall be no greater in length (from the throttle plate/butterfly to air filter) or diameter

© Confederation of Australian Motor Sport Ltd. All use subject to Conditions of Use at *www.camsmanual.com.au*

than that of the donor. If this is not practicable an alternative configuration must be approved by ARCom and included on the Recognition Form.

(d) Engine oil cooler.

(e) Clutch pressure plate.

(f) The actual ratios of the gearbox and differentials must be the same as the selected donor vehicle. The gears may be aftermarket parts provided they fit into the unmodified original housing in accordance with the current Group N regulations.

(g) Blow off valves must be as homologated on the donor vehicle.

(h) Throttle body/ies.

(i) Exhaust manifolds.

Note: All the parts used to build the Group N (P) Rally Car must be from the same donor vehicle selected (eg, Subaru or Mitsubishi). It is not permitted to utilise components from other than the selected donor vehicle, nor is it permitted to utilise parts from more than one homologated version of the donor vehicle; eg, if the donor vehicle is a Mitsubishi Lancer Evo VI, only parts homologated for an Evo VI are permitted.

The term supercharged/ing includes turbocharging under CAMS and FIA regulations.

8.6.3 **Engine specifications:** On any vehicle utilising an engine from a donor vehicle (eg, Subaru or Mitsubishi) that engine must comply in all respects with FIA Group N specifications, save where specifically amended by these regulations.

Any engines which are not from a Group N-homologated donor vehicle must comply with the following:

1. The engine block and cylinder head/s must be from a production vehicle of the vehicle manufacturer.

2. The maximum swept volume of the engine shall be 2000cm^3.

3. In the case of **supercharging**, the nominal cylinder capacity shall be multiplied by 1.7 and the car will pass into the class corresponding to the equivalent volume thus obtained. The car shall be treated in all respects as if its cylinder capacity thus increased were its real capacity.

4. All other engine parts and/or modifications are free, subject to 8.1.1 and the following:

(a) The maximum number of cylinders must be the same as fitted to the vehicle model by the manufacturer.

(b) The number of camshafts and valves must be the same as the number and location fitted to the vehicle model. The camshaft profile/s must be specified on the Recognition Form.

(c) Induction may be natural or forced.

(d) Any supercharged engine must be fitted with a restrictor as specified below:

- All the air necessary for feeding the engine must pass through this restrictor which must respect the following:
- The maximum internal diameter of the restrictor will be 32mm and this diameter shall be maintained for a minimum distance of 3mm measured downstream of a plane perpendicular to the rotational axis situated at a maximum of 50mm upstream of a plane passing through the most upstream extremities of the wheel blades *(see diagram 6)*.

  This diameter must be complied with, regardless of the temperature conditions.
- The external diameter of the restrictor at its narrowest point must be less than 38mm, and must be maintained over a distance of 5mm to each side. The mounting of the restrictor onto the turbocharger must be carried out in such a way that two screws have to be entirely removed from the body of the compressor, or from the restrictor, in order to detach the restrictor from the compressor.
- Attachment by means of a needle screw is not authorised.

  For the installation of this restrictor, it is permitted to remove material from the compressor housing, and to add it, for the sole purpose of attaching the restrictor onto the compressor housing.

  The heads of the screws must be pierced so that they can be sealed.
- The restrictor must be made from a single material and, in addition to the airflow control orifice, may be pierced solely for the purpose of mounting and sealing, which must be carried out between the mounting screws, between the restrictor (or the restrictor/compressor housing attachment), the compressor housing (or the housing/flange attachment) and the turbine housing (or the housing/flange attachment). *Refer diagram 6*.

(e) **Turbocharger:** There must be one single turbocharger, with single stage compression and expansion, which may not have variable pitch nor variable geometry. For vehicles not utilising donor vehicle components, the turbocharger must be of the same type as one homologated by the FIA for a Group N vehicle. The turbocharger will be specified in the Recognition Form.

(f) **Intercooler:** As specified in the Recognition Form.

(g) **Water injection and spraying:** The spraying of the intercooler with water is permissible. The number of sprays, injectors and the size of the water reservoir shall be no greater than that homologated on a Group N vehicle. Water injection in the intercooler and/or the intake manifold is permitted if fitted to the base vehicle or the donor vehicle. This is to be specified on the recognition form along with the water reservoir position and capacity.

(h) **Air injection:** Injecting air into the exhaust manifold is authorised for supercharged vehicles only.

(i) **Intake manifolds:** Intake manifolds with variable geometry are prohibited, unless fitted as original equipment to the engine in question, but are otherwise free. If variable geometry mechanism is fitted it may be disconnected or rendered inoperative. If the OE manifold is replaced, then variable geometry is not permitted.

© Confederation of Australian Motor Sport Ltd. All use subject to Conditions of Use at *www.camsmanual.com.au*

(j) **Exhaust manifolds** are free, save where the engine is available to the public in supercharged form from the engine manufacturer, in which case the exhaust manifold as normally sold to the public must be utilised. The precise specifications (including pipe diameter & lengths) and drawings of any exhaust manifold not from the donor manufacturer must be recorded in the Recognition Form.

(k) **Cylinder head cover:** If, and only if, the selected engine is fitted with a cylinder head cover of plastic or composite material, it is permitted to replace the cover by another made entirely from aluminium alloy, subject to any such replacement being identical in shape and not inferior in weight to the original cover.

(l) **Bearing sizes:** The make and material of engine bearings are free, however, they must be of the original type and dimensions.

(m) **Connecting rod:** subject to the connecting rod being not less than 10% of the weight of an homologated Group N two-litre supercharged 4WD connecting rod, the connecting rod being manufactured of steel, and save where the engine is available in supercharged form where the original connecting rods must be utilised, connecting rods are otherwise free.

(n) **Valve timing and valve lift:** Variable valve timing systems are prohibited, unless fitted as original equipment to the engine in question. If fitted, such mechanisms may be disconnected or rendered inoperative.

(o) **Cooling:** The position and size of the radiator may be modified from that fitted to the base vehicle and if so shall be noted on the Recognition Form, but its capacity must not exceed that of any Group N two-litre supercharged 4WD donor vehicle.

(p) **Induction system:** All vehicles must be fuel injected and be fitted with a single fuel injector per cylinder. Injectors mounted on the cylinder head in the original engine may be moved by recognition of the intake manifold outlined in (i) above. Only the injection system specified on the Recognition Form may be used.

(q) **Lubrication:** Lubrication by dry sump is forbidden.

The oil pump must be a single stage pump. Both the suction aperture and the oil sump filter must be fixed below the axis of the crankshaft as the engine is mounted in the car. The fitting of baffles in the oil sump is authorised.

8.6.4 Transmission:

(a) All the transmission parts designed for the transformation from two-wheel drive to four-wheel drive, allowing the modification of the Group N (P) model considered, shall be specified on the Recognition Form.

(b) For Option 1 and 2, gearbox and differential ratios must be the same as a single currently or previously-homologated two-litre, 4WD, supercharged Group N model. The gears may be aftermarket parts, the number of teeth on the gears is free.

(c) In order to be able to mount these transmission parts, it is permitted to modify the bodyshell in accordance with diagram 7.

Mounting of the longitudinal transmission shaft by a maximum of two bearings attached to the chassis is permitted.

(d) The rear axle must be mounted onto the subframe as described at 8.7.3 below.

8.7 Suspension:

8.7.1 Track: Maximum track width increase is 60mm over the base vehicle or, if this is unable to be met, then the track shall be not more than 1520mm.

8.7.2 Wheel base: The wheel base shall be within ±2.5% of that of the base vehicle.

8.7.3 Front suspension: The original design type of suspension must be retained (MacPherson strut, upper and lower arms etc), or alternatively it is permissible to fit a MacPherson strut suspension system, utilising parts bin components from the manufacturer of the vehicle.

8.7.4 Rear suspension: The type of rear suspension of the Group N (P) Rally Car must be one of the following:

1.	MacPherson strut
2.	Trailing arm
3.	That of the recognised base model
4.	That of the donor vehicle

If different from the donor vehicle or recognised base model, items one or two must be sourced from the base manufacturer's parts bin.

Only one shock absorber is authorised per rear wheel.

It is permitted to modify the side members within the area authorised by diagram 7: 400 x 200mm in relation to the centre line of the rear wheels.

8.7.5 Anti-sway/anti-roll bars:

(a) **2WD Group N (P) Rally Cars**

The front and rear anti-sway bar specifications shall be recorded in the Recognition Form. Each anti-sway bar shall be manufactured from steel. The maximum diameters shall be 24mm front and 22mm rear.

It is permissible for the anti-sway bars to incorporate provisions for adjustment of their effective stiffness. The anti-sway bar shall not be adjustable from the cockpit.

© Confederation of Australian Motor Sport Ltd. All use subject to Conditions of Use at *www.camsmanual.com.au*

(b) **4WD Group N (P) Rally Cars**

The front and rear anti-sway bar specifications shall be recorded in the Recognition Form. Each anti-sway bar shall be manufactured from steel, which shall be solid unless the base or donor vehicle is available with hollow anti-sway bars. The maximum diameters shall be 24mm front and 22mm rear, subject to a manufacturing tolerance which shall be outlined in the relevant Recognition Document. There shall be no provision for adjustment of the effective stiffness of any anti-sway bar.

8.7.6 **Rear subframes:** Recognised production rear subframes shall be:

Mitsubishi Lancer Evo (all models)
Subaru WRX (all models)
Toyota GT4
those originating from other vehicles which are, or have been, Group N-homologated.

Modifications are permitted to fit such a recognised subframe to the vehicle. All modifications must be welded to the bodyshell. Details of the mounting shall be recorded in the Recognition Form by drawings and/or photographs.

8.7.7 **Steering:** The steering rack shall remain in the original position as on the base vehicle or shall be as per the donor vehicle. Rack and pinion steering shall be used, unless the base vehicle utilises a different system, in which case that system may be utilised. The steering rack must respect the original type and ratio. Attachment between steering column and rack is free, save that it must incorporate a collapsible shaft in accordance with the requirements of the Australian Design Rules.

If compliance with these requirements is not possible for engineering reasons, the manufacturer shall submit an alternate plan detailing the proposed steering rack position and type for consideration by CAMS. Following approval by ARCom any deviation from the above shall be included in the Recognition Form.

Steering may not incorporate a lesser number of turns lock to lock than any Group N-homologated vehicle, unless the original unmodified steering system of the base vehicle is utilised and incorporates a lesser number of turns lock to lock in standard form.

No arrangement which provides active steering control of the rear wheels is permitted unless such arrangement existed on the base vehicle.

8.8 Wheels ~~and tyres~~:

8.8.1 **Wheels – 2WD:** The maximum wheel dimension shall be 18" x 8"~~:~~ **, otherwise w**heels must comply with the provisions of ~~Article 6.4.1 of~~ the FIA Group N Regulations~~, but are otherwise free~~.

8.8.2 **Wheels – 4WD:** ~~The maximum wheel dimension shall be 17" x 8".~~ Wheels must comply with the provisions of ~~Article 6.4.1 of~~ the FIA Group N Regulations~~, but are otherwise free~~.

8.8.3 **Tyres: Tyres shall comply with the FIA Group N Regulations, Schedule R and Schedule E.** ~~The maximum outside tyre diameter shall be 650mm with tyres inflated to at least 25psi. The use of any device for maintaining the performance of the tyre with an internal pressure equal to or less than atmospheric pressure is forbidden. The interior of the tyre (space between the wheel and the internal part of the tyre) must be filled only with air.~~

8.9 Fuel tank / fuel system:

8.9.1 The total capacity of the fuel tanks must not exceed the following limits, in relation to the engine capacity:

up to 1000 cm^3	75L
over 1001 cm^3 and up to 1400 cm^3	80L
over 1401 cm^3 and up to 1600 cm^3	90L
over 1601 cm^3 and up to 2000 cm^3	100L
over 2001 cm^3 and up to 2500 cm^3	110L
over 2501 cm^3	120L

8.9.2 The original fuel tank shall be replaced by a safety fuel tank/s complying with FIA specification FT3 or FT3 (1999). The number of tanks is free. The tank/s must remain in the original location or be placed inside the luggage compartment. It is permissible to modify the supplementary accessories (refuelling orifice, overflow pipe, breather etc) for the purpose of fitting the FT3 or FT3 (1999) fuel tank. All fuel tank fittings shall be of aviation type. The route of fuel lines is free.

The construction of any collector tanks with a capacity of less than one litre is free.

For twin-volume cars with a fuel tank installed in the luggage compartment, a fireproof and liquid-proof case must surround the fuel tank and its filler holes. For three-volume cars, a fireproof and liquid-proof bulkhead must separate the cockpit from the fuel tank. Nevertheless, it is recommended that this liquid-proof bulkhead be replaced by a liquid-proof case as for twin-volume cars.

© Confederation of Australian Motor Sport Ltd. All use subject to Conditions of Use at *www.camsmanual.com.au*

The opening remaining after the removal of the original tank may be closed by the installation of a panel.

In any case, these changes of the position of the tanks shall not give rise to any lightening or reinforcements other than those provided for by these regulations.

8.9.3 The primary fuel pump must be the same type and delivery rate as another primary fuel pump permitted in any homologated two-litre, 4WD, supercharged Group N model. The recognised fuel pump shall be specified in the Recognition Form. If the original tank is equipped with an internal electric fuel pump and filter, the pump and filter may be fitted alongside the FT3/FT3 (1999) fuel tank. The fitting of a second fuel pump of the same type is permitted, but this must be only utilised as a spare fuel pump (eg, to be used in case of failure of the primary fuel pump). Any such spare pump shall be configured so as to not be capable of operating simultaneously with the primary fuel pump. It must be connectable only when the car is immobile and by means of purely mechanical apparatus situated beside the pumps.

8.9.4 A fitting shall be provided in the fuel line for the purpose of allowing fuel samples to be taken.

8.10 Electrical system:

8.10.1 The nominal voltage of the electrical system of the base vehicle including that of the supply circuit of the ignition must be retained.

8.10.2 The addition of relays and fuses to the electrical circuit is permitted as is the lengthening or addition of electric cables, save where restricted by 8.10.6.

8.10.3 **Battery:** The make and capacity of the battery/ies are free.

Each battery must be securely fixed and covered to avoid any short-circuiting or escape of fluids.

The number of batteries laid down by the manufacturer must be retained.

The site of the battery in the donor vehicle must be retained, or where no donor vehicle is utilised the battery shall be located in the engine compartment. A power takeoff connected to the battery is permitted in the passenger space.

8.10.4 **Generator, alternator and voltage regulator:** Free as to design, but neither the position nor the driving system of the generator or alternator may be modified. The position of the voltage regulator may be changed but it may not be placed in the cockpit unless it was placed there originally.

8.10.5 **Lighting - indicating:**

All lighting and signalling devices must comply with Schedule R (refer to "General Requirements for Cars and Drivers" in the CAMS Manual of Motor Sport).

The make of the lighting devices is free.

Lighting devices which are part of the standard equipment must be those laid down by the manufacturer and must comply where their functioning is concerned with what the manufacturer has laid down for the model in question.

The mounting of additional headlights is authorised.

The fitting of a reverse-light is authorised, if necessary by embedding it into the coachwork, provided that it will only switch on when the reverse gear is engaged and that the civil regulations for the State/s in which the competition is held are respected.

8.10.6 **Electronic control unit (ECU):** The electronic control unit for the ignition and fuel injection system/s is free.

8.10.7 **Wiring harness:**

(a) Other than where permitted by this regulation, or to install permitted equipment, the base vehicle wiring harness shall remain unmodified.

(b) For those manufacturers of 4WD Group N (P) rally cars utilising Option 3, the manufacturer's engine harness from the engine being fitted must be utilised, as must the base vehicle main wiring harness, other than the engine wiring harness. Inputs to, and outputs from the ECU (including sensors and actuators) must retain their original functions in accordance with the FIA Group N regulations, the Group N (P) Recognition Form and/or FIA homologation papers, as appropriate.

(c) Manufacturers of 4WD Group N (P) rally cars utilising Option 1 or 2, or 2WD Group N (P) rally cars, AND converting from a production naturally aspirated engine to a supercharged engine, shall be permitted to construct a suitable engine/ECU wiring harness, otherwise the wiring harness must comply with Article 8.10.7(a) above. The base vehicle main wiring harness must be utilised, other than the engine/ECU wiring harness. However, such a wiring harness shall not allow functions which are not permissible and/or possible on any FIA-homologated Group N vehicle.

(d) All fuel injection system sensors and actuators to be utilised shall be specified on the Recognition Form.

Permitted sensors: coolant temperature sensor, air temperature sensor, atmospheric pressure sensor, manifold absolute pressure sensor, throttle position sensor, air flow meter, crank angle sensor, camshaft position sensor, knock sensor, oxygen sensor.

Permitted actuators: injectors, fuel pressure regulator.

(e) In all cases the Recognition Form shall include a diagram showing the adaptation of the engine loom to the vehicle loom. Also to be provided is a schematic diagram detailing the location of all fuel, turbo, ignition, drive train and other sensors and actuators utilised in the vehicle.

8.10.8 **Starter:** The starter is free, provided that it remains inside the engine compartment, retains its original drive system and is sourced either from the manufacturer's parts bin, or the donor vehicle.

© Confederation of Australian Motor Sport Ltd. All use subject to Conditions of Use at *www.camsmanual.com.au*

8.11 Weight:

8.11.1 Minimum weight: The specified minimum weight must be respected at all times, and includes all safety equipment including the following components in the minimum weight of the vehicle:

the spare wheel/s
the jack and handle
tools and equipment carried in the vehicle during competition on special stages, which may include a winch
spare parts carried in the vehicle during competition
the sump guard/differential guard etc
if there are night stages, any additional lights and brackets which would normally be used on the vehicle. If the event is all daylight, the allowance is invalid
the fuel system must be empty
the fluid levels for all tanks and reservoirs containing fluids filled to the manufacturer's specifications (except the windscreen washer bottle and brake cooling system)
the windscreen washer bottle and brake cooling system must be filled to a level which would normally be expected to be used during competition, as determined by the Technical Commissioner.
if a water injection tank exists it may be filled to the manufacturer's specified level.

The use of ballast is permitted subject to CAMS requirements (see "Definitions" [Article 2] and 8.11.4). The minimum weight shall not include the crew.

8.11.2 2WD Group N (P) Rally Cars: A scale of minimum weight varying by capacity class will be implemented by ARCom from time to time and implemented by publication in a Bulletin.*

8.11.3 4WD Group N (P) Rally Cars: The minimum weight for 4WD Group N (P) vehicles shall be 1385kg.*

*Note: Weight shall be a primary means of adjusting parity and individual vehicles may be subject to a higher minimum weight which shall be specified on the Recognition Form. ARCom will continue to monitor the weights of equivalent FIA-homologated Group N vehicles competing in the ARC (or elsewhere) and may at its discretion review the minimum weight in light of this information.

8.11.4 Ballast: Should ballast be required to be carried to meet the specified minimum weight, it shall be affixed to the rear floor space, inside the passenger compartment of the vehicle, in accordance with the following requirements:

1. Ballast must be secured such that tools are required for its removal and so as to allow the fixing of seals by the scrutineers.
2. It must be made from stacking steel plates according to the following drawing.
3. The plates must be firmly attached inside a housing with not fewer than five (5) M12 screws.
4. If attached directly to the floor, the floor must be reinforced under the head of each screw by a reinforcement plate which is at least 3mm thick and 2,500mm^2 area.
5. The housing containing the ballast plates must be sealed by a cover.
6. All nuts must be safety wired in place.

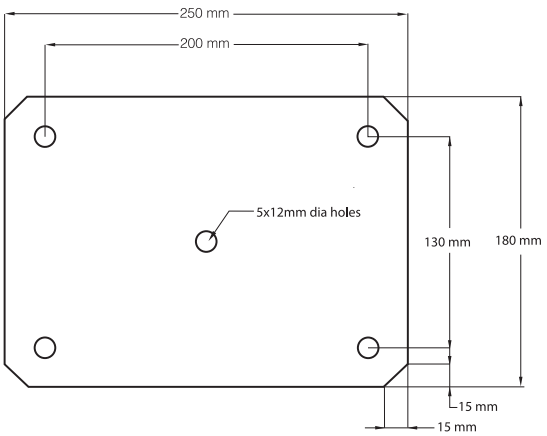

© Confederation of Australian Motor Sport Ltd. All use subject to Conditions of Use at *www.camsmanual.com.au*

8.12 Exhaust system: In addition to Article 8.6 of these present regulations:

8.12.1 The exhaust system must exit at the rear of the vehicle.

8.12.2 The exhaust system must be fitted with a muffler as nominated in the requirements for all rally cars. See Schedule R, Item 7 (refer to "General Requirements for Cars and Drivers").

8.13 Underbody protection: Underbody protection shall comply with the provisions of FIA Group N.

8.14 Brakes:

8.14.1 2WD Group N (P) Rally Cars: Save that carbon fibre, alloy or ceramic brake discs are prohibited, brakes are free. Titanium brake calliper pistons, and aluminium brake disc mounting "hats" are specifically permitted.

8.14.2 4WD Group N (P) Rally Cars: The same brake callipers and discs (front and rear) as the recognised donor vehicle must be utilised, or otherwise shall be from the manufacturer of the base vehicle. In the latter case, specific approval is required and shall be recorded on the Recognition Form. Performance parity between currently competing Group N-homologated two-litre, 4WD, supercharged models shall be considered prior to approval for inclusion in Recognition Form. Disc and pad size, together with calliper efficiency shall be the primary factors examined.

8.15 4WD - other parity parts: All other items that may be changed or replaced shall be approved by ARCom and entered on the Recognition Form, taking the following into account:

8.15.1 Production Constant Velocity (CV) and universal joints must be used. The diameter of the drive shaft must not be greater than that of the donor or, in the case of Option 1, any homologated Group N, two-litre 4WD supercharged vehicle. The length of drive shafts is free.

8.15.2 Wheel bearings and hubs must be from the donor vehicle, or from the manufacturer's "parts bin". Specific approval is required for any wheel bearings or hubs other than from a donor vehicle which, if approved, shall be recorded on the Recognition Form. Bearings must be of the same type as used on the donor vehicle.

8.15.3 Tailshafts and support bearings must be of at least the same diameter and be not more than 10% lighter than those fitted to the donor vehicle. The use of composite materials in the manufacture of tail shafts is prohibited.

8.15.4 The vehicle must be fitted with not more than two engine coolant radiator cooling fans, unless the donor vehicle is fitted as standard with more, in which case that number shall be the maximum permitted. If air conditioning is fitted, an additional fan is authorised.

8.15.6 Exhaust systems must comply with Group N regulations from the first joint to rear of vehicle. This shall consist of an exhaust pipe maximum outside diameter 60.5mm, unless the donor vehicle is Group N homologated by the FIA with a larger diameter exhaust, in which case that larger diameter may be utilised.

8.16 All other areas of preparation:

8.16.1 Fire extinguishers: Group N (P) Vehicles must be fitted with both hand held fire extinguisher/s and a plumbed in fire extinguisher system in compliance with Schedule R, Article 10 (i) and (ii) (refer "General Requirements for Cars and Drivers").

8.16.2 Other areas of preparation: In all other areas of preparation refer to the FIA Group N Regulations together with the CAMS Safety Items and Schedule R (refer "General Requirements for Cars and Drivers").

© Confederation of Australian Motor Sport Ltd. All use subject to Conditions of Use at *www.camsmanual.com.au*

Diagram 1

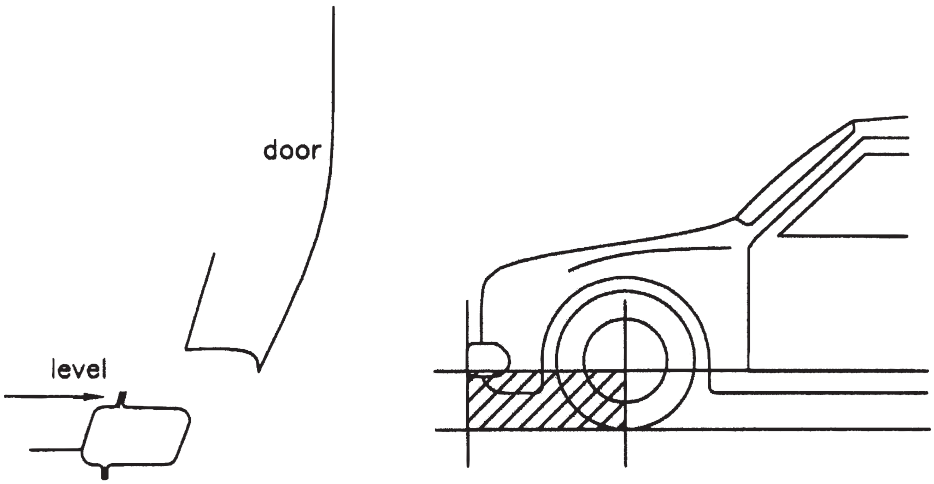

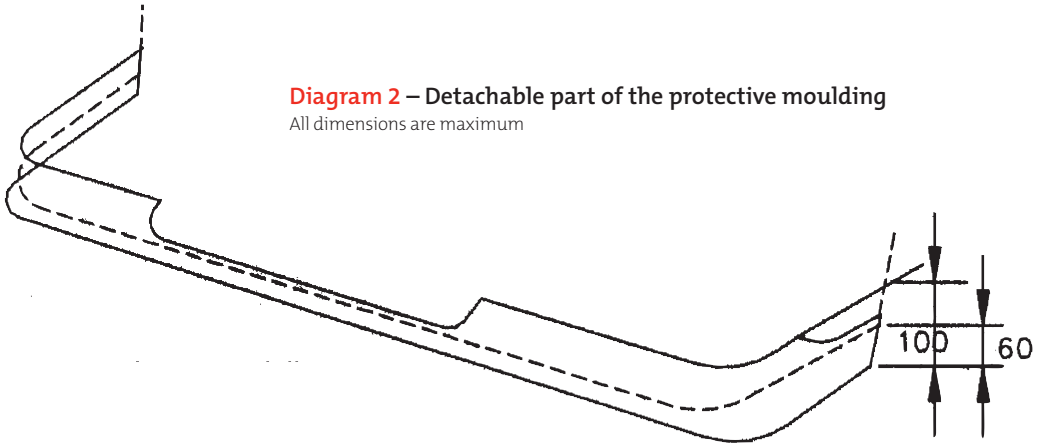

Diagram 2 – Detachable part of the protective moulding
All dimensions are maximum

Diagram 3 – 2WD Rear Aerodynamic Device
All dimensions are maximum

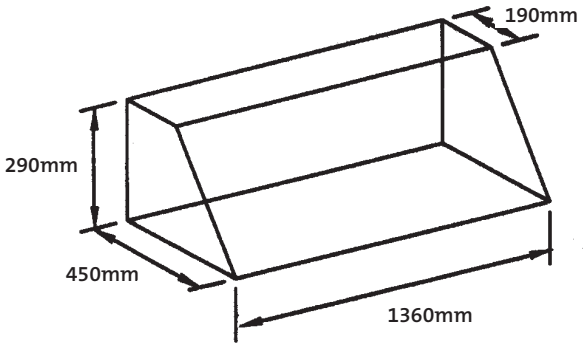

Diagram 4 – 4WD Rear Aerodynamic Device
All dimensions are maximum

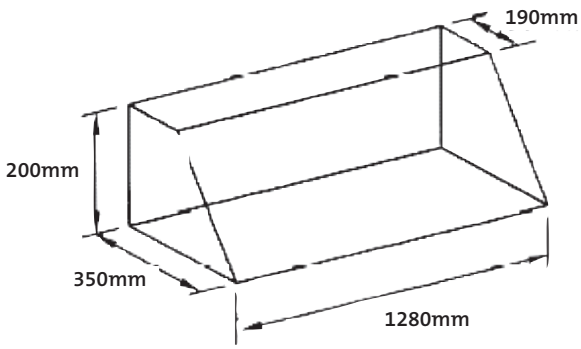

© Confederation of Australian Motor Sport Ltd. All use subject to Conditions of Use at *www.camsmanual.com.au*

Diagram 5

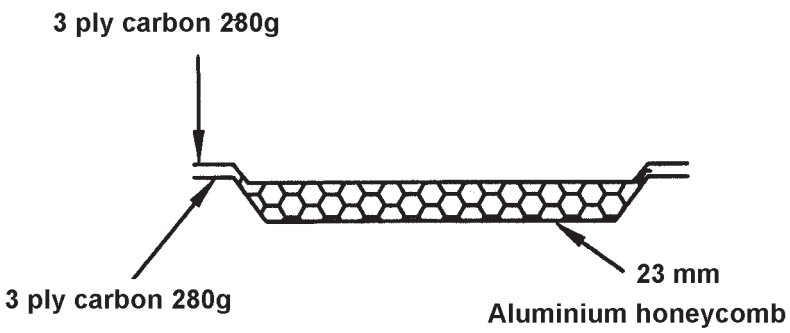

Carbon 4/4 twin 280gms E620

Aluminium honeycomb 23mm 1/8" cel4.5 or 6.35

Diagram 6 – Air restrictor

Note: Dimensions reflect 2WD specification

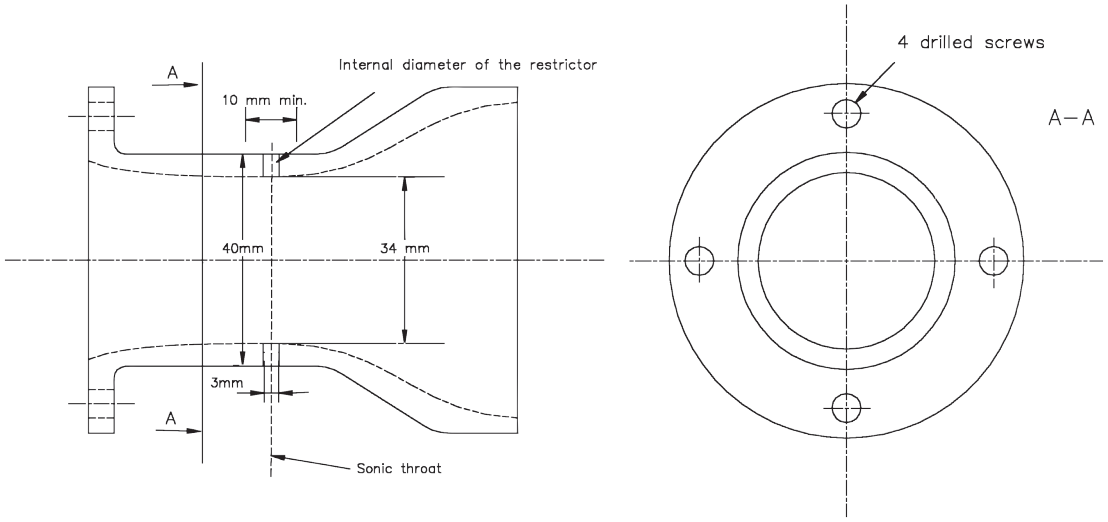

Diagram 7

All dimensions are maximum

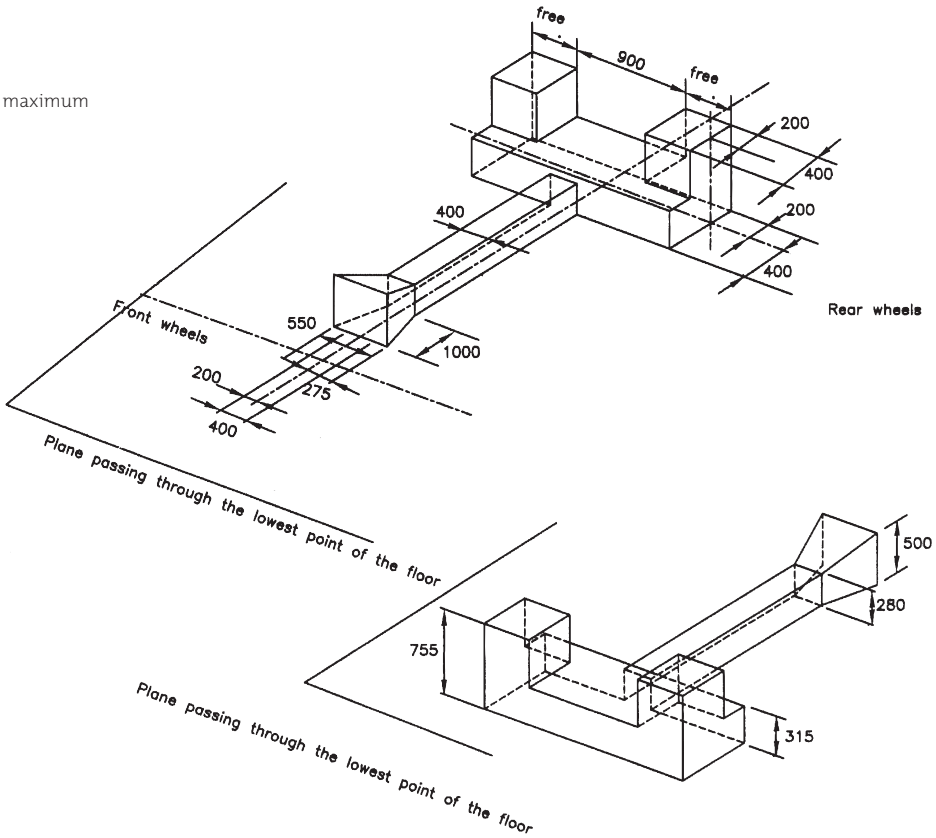

© Confederation of Australian Motor Sport Ltd. All use subject to Conditions of Use at *www.camsmanual.com.au*