SPECIFICATIONS OF AUTOMOBILES

All vehicles in races and other speed events must comply with the General Requirements of Automobiles (see "General Requirements for Cars and Drivers" in the CAMS Manual of Motor Sport).

2nd Category – Sports Cars

The 2nd Category provides for two-seater sports racing cars and other highly-modified cars:

Group 2A	Sports Cars, open and closed
Group 2B	Marque Sports Cars
Group 2C	Clubman Sports Cars
Group 2F	Production Sports Cars

Cars must comply with the General Requirements for Automobiles, including Schedules A, B and, in races, C (refer to "General Requirements for Cars and Drivers" in the CAMS Manual of Motor Sport) as well as the Specific Requirements for each group.

Group 2C – Supersports

PREAMBLE

The Sports Car Racing Association of Australia Inc (SCRAA) is recognised by CAMS as the sole entity representing competitors in Group 2C. The SCRAA is the sports car category representative group which is made up of representatives from CAMS and SCRAA affiliated state associations.

The SCRAA is recognised by CAMS as the sole competitor entity which may make recommendations regarding maintenance of and/or proposed changed to technical regulations for Group 2C.

CAMS will consult with the SCRAA exclusively regarding the maintenance and/or proposed changed to the technical regulations. The SCRAA will be responsible for consultation processes within its membership and with other interested parties as may be appropriate from time to time.

I. INTRODUCTION

Supersports Car A restricted design open sports car with a front or mid-mounted engine driving the rear wheels only and intended for use in speed events and races.

This category also provides for closed sports cars (Class B) with a front mounted engine driving the rear wheels. Closed cars shall further comply with the provisions of Article 16.

This category is a follow-on from Second Category, Group 2C as appeared in the 2002 CAMS Manual. It is intended that cars issued with a logbook prior to 1 January 2003 and complying with the 2C regulations (Clubman Sports 1300) defined in the 2002 CAMS Manual of Motor Sport will continue to be eligible for competition in 2C Supersports irrespective of their compliance with the present regulations. Such cars will be issued by CAMS with a Technical Passbook to define their technical specification as at 31 December 2002.

It is intended that these regulations remain stable until at least 31 December 2008.

2. GENERAL CHARACTERISTICS

2.1 The basic design of the car must consist of a space frame chassis made from ferrous metal to which the engine, suspension, drivetrain and bodywork are attached. Stress-bearing panels may be attached to the ferrous spaceframe but need not be of ferrous material.

2.2 It must have four wheels of which the rear two are used for propulsion and front two for steering.

2.3 It must adhere to the requirements of a structural integrity test with a minimum torsional rigidity of 2500 Nm per degree of deflection. Any vehicle which suffers damage and has its log-book is endorsed by event scrutineers reflecting significant accident damage must be re-tested for torsional rigidity and be accompanied with the appropriate certification at its next event. Any chassis constructed of ferrous material with a yield-strength of greater than 450MPa requires certification from a commercial heat treating company confirming the heat treatment applied to the chassis. This certification is to accompany the vehicle log book application. The method of measurement is as defined in Article 15 of these Regulations.

2.4 The use of carbon fibre and/or Kevlar composites in any structural components of the chassis or suspension is prohibited.

2.5 The use of titanium alloys except on any internal engine components is prohibited.

© Confederation of Australian Motor Sport Ltd. All use subject to Conditions of Use at *www.camsmanual.com.au*

2.6 The use of magnesium sheeting less than 1.6mm is prohibited.

2.7 CAMS reserves the right to require an entrant to fit an approved rev monitor in addition to any rev limiting device that may be fitted in accordance with these regulations. The wiring loom for the rev monitor must be separate and clearly visible.

2.8 The log book application is to be accompanied by photograph / CAD or line drawings to permit:

- the identification of the chassis; chassis number;
- a photograph of the completed vehicle (3/4 front, 3/4 rear);
- certification for heat treatment as per Article 2.1 (if applicable);
- a certificate of compliance of ROPS as set out in Article 14.1 and a certificate confirming that the chassis has satisfied the minimum torsional rigidity requirements as per Article 15.2.

As a consequence of Intellectual Property Rights and commercial considerations, this information must not be used for scrutiny purposes.

3. BODYWORK AND EXTERIOR DIMENSIONS

3.1 Length: The overall length of the car must not exceed 4800mm.

3.2 Width: The overall width of the car including the complete wheels shall not exceed 2000mm, when the steered wheels are in the straight-ahead position.

3.3 Height: The height measured vertically from the ground to the highest part of the car with the driver aboard shall not exceed 1100mm, except as regards the rollover bar, which must not constitute an aerodynamic element.

3.4 Overhangs: The sum of the overhangs shall not exceed 85% of the wheelbase. The difference between front and rear overhangs must not exceed 15% of the wheelbase.

3.5 Doors: Doors are not permitted.

3.6 Windscreen: Windscreens are optional, but if fitted must comply with 3.3 above

3.7 Bodywork

3.7.1 The use of carbon fibre and/or Kevlar for the manufacturing of the bodywork is permitted.

3.7.2 Unless otherwise specified in 3.7.3, the bodywork shall cover all the mechanical components (including drivetrain and suspension components); only the exhaust and air intake ducting, and the top of the engine may project.

3.7.3 Front-engine cars may be fitted with cycle-type mudguards on the front wheels only, and under these circumstances the bodywork need not cover all of the front suspension components. If fitted then such mudguards may be mounted on unsprung parts of the car, and must cover at least 120° of their circumference and the width of the tyre in contact with the road surface.

3.7.4 On all cars, the height of any air intakes must comply with article 3.3.

3.7.5 The bottom of all cars, rearward of the vertical plane through the centreline of front wheels, and forward of the vertical plane tangent to the forward edge of the complete rear wheels, must be fitted with a continuous solid, flat (tolerance ±10mm), hard, impervious and rigid surface within which it would be possible to draw a rectangle 800mm (measured along the transverse axis of the car) by 1000mm (measured along the longitudinal axis of the car).

The whole of this surface must form an integral part of the chassis/body unit and must have no freedom of movement or provision for adjustment in relation to this unit. No space may exist between this "flat bottom" as defined above and the chassis/body unit.

A tolerance of ±10mm will be permitted for the "flat bottom" defined above. The aim of this tolerance is not to permit designs which go against the spirit of the "flat bottom", but to allow for manufacturing and/or repair of accident damage, which would otherwise render a car ineligible.

3.7.6 No part having an aerodynamic effect and no part of the bodywork may under any circumstances be located below the geometric plane of the flat surface provided for in article 3.7.5.

3.7.7 Any part having an aerodynamic effect and all parts of the bodywork must:

(a) be rigidly secured to the entirely sprung part of the car (chassis/body unit);

(b) must have no freedom of movement;

(c) must be solidly fixed and must remain immobile in relation to this part while the car is in motion.

3.7.8 At the rear, the bodywork shall project over the complete wheels in such a way as to cover at least 210° of their circumference, and their entire width.

3.7.9 The engine cover and its junction with the bodywork/cockpit must be designed so as to prevent any leakage of fuel into the interior of the engine compartment during refuelling. Holes may be drilled for fasteners, wiring, fuel, brake and oil lines.

4. WEIGHT

Deleted 2004

5. ENGINE

5.1 The engine shall be a liquid-cooled, four stroke, reciprocating piston unit. The cylinder block and head shall be derived from a recognised series production vehicle of which at least 2500 have been produced. The type of vehicle and maximum engine rotational speed shall be as specified in article 5.2 or 5.3 below. The engine must be fitted with a rev limiter fitted so as to permit easy access and interrogation by scrutineers. It must be set to prevent the engine from producing power above the rotational speeds indicated. This rev limiter may form

© Confederation of Australian Motor Sport Ltd. All use subject to Conditions of Use at *www.camsmanual.com.au*

part of the engine management system. The engine is otherwise free.

5.2 For engines under 1110cm³, the engine may alternatively be derived from a volume production motorcycle or four-wheel vehicle from a recognised manufacturer. For all such engines, the maximum operational speed shall be 11000 rpm.

5.3 For engines from 1110cm³ to 1320cm³ the engine block and cylinder head must be derived from a four-wheel motor vehicle. The maximum engine operational speed shall be 8500rpm.

5.4 For engines from 1320cm³ to 1630cm³ the engine block and cylinder head must be derived from a four-wheel motor vehicle. The maximum engine operational speed shall be 8500 rpm.

5.5 The material, type and number of engine mountings are free, as is the position and inclination of the engine in its compartment.

5.6 The internal and/or external spraying or injection of water or any substance whatsoever is prohibited (other than fuel for the normal purpose of combustion inside the engine). The cooling radiator and the lines connecting it to the engine are free, as are the thermostat and the fan, and their location. The water pump is free.

5.7 The exhaust is free. The exhaust pipe outlets must be directed either rearwards or sideways.

6. FUEL SYSTEM

6.1 Fuel must be Commercial Fuel in compliance with Schedule G (see "General Requirements for Cars and Drivers").

6.2 No fuel pumps, fuel filters or fuel lines may be positioned inside or pass through the cockpit unless protected by a cover that is impervious to the passage of flame and/or fluid.

6.3 Fuel tanks must be properly protected. All fuel tanks situated outside the main structure of the car must be surrounded by a 10mm thick crushable structure. The tank must be isolated by means of bulkheads preventing the fuel from passing into the cockpit or engine compartment or coming into contact with exhaust piping, in the event of spillage, leakage or any other accident occurring to the tank.

7. OIL SYSTEM

7.1 All oil tanks must be properly protected. All oil tanks situated outside the main structure of the car must be surrounded by a 10mm thick crushable structure.

7.2 All lubricating oil lines operating at a pressure of 350kPa or above, must have a minimum burst pressure of 4100kPa at the minimum operating temperature of 135°C. When flexible, these lines must have threaded connectors and an outer braid resistant to abrasion and flame (will not sustain combustion).

7.3 No lines containing lubricating oil may pass through the cockpit unless protected by a cover that is impervious to the passage of flame and/or fluid.

8. ELECTRICAL EQUIPMENT

8.1 Batteries must be located outside the cockpit and they must be securely fixed.

8.2 A starter with an electrical or other power source must be carried on board the car: It must be possible for the driver to operate it when seated normally in the car. The starter must be capable of starting the engine at all times.

8.3 All cars must be fitted with two rear facing red stoplights. They must be located symmetrically on either side of the longitudinal axis at the rear of the car and must be mounted in a visible position.

8.4 The alternator is free.

8.5 One high-intensity rain light is required, fitted on the centreline of the car, at the rear of the bodywork. Either an incandescent light with a minimum wattage of 20W or a high intensity LED light with a minimum luminous intensity of 18,000 mCd (millicandela). The minimum view angle would be 40° when viewed directly from behind.

9. TRANSMISSION

9.1 **Gearbox:** The gearbox is free, but all cars must have an operatable reversing mechanism. It must be possible for the driver to select the reversing mechanism while seated normally at the wheel and with the engine running. Automatic gearboxes are prohibited.

9.2 **Clutch:** The clutch is free.

9.3 **Final drive assembly:** The final drive and differential are free.

10. SUSPENSION

10.1 All road wheels/axles must be suspended from the chassis/body unit by a springing medium (ie, axles or wheels must not be connected directly to the chassis/body unit). The springing medium must not consist of bolts located through flexible bushes or flexible mountings. There must be independent movement of the axles/hub carriers/stub axles giving suspension travel from "bump" to "droop" in excess of the flexibility of the mounting location attachments.

10.2 Active suspension systems are prohibited, as are all systems enabling the flexibility of springs, shock absorbers and the ground clearance height of the car to be controlled while the car is in motion. Cockpit adjustment of anti-roll bars is permitted.

10.3 Electroplating of steel suspension elements is prohibited.

© Confederation of Australian Motor Sport Ltd. All use subject to Conditions of Use at *www.camsmanual.com.au*

11. BRAKES

11.1 Brakes are free except that carbon fibre brake rotors are prohibited.

12. WHEELS, TYRES AND STEERING

12.1 Wheels and tyres are free subject to the requirements of Schedule E (refer "General Requirements for Cars and Drivers").

12.2 Cars equipped with four-wheel steering systems are prohibited.

12.3 There must be a continuous mechanical connection between the steering wheel and the steered wheels.

13. COCKPIT

13.1 For mid-engine cars, the cockpit must have space for two seats and be symmetrical about the longitudinal centreline of the car. Up to a height of 300mm from the floor, the driver in his normal driving position must be located on one side of the longitudinal centre-line of the car. The passenger opening may be covered with a removable panel. This may be of a flexible or rigid material. It must be securely fastened in such a manner, that it cannot come loose at racing speed.

13.2 For front-engine cars, the cockpit must have space for a minimum of one seat. All points at which the steering column and pedals are attached to the chassis must be located to the one side of the car. The passenger space is optional and may be covered with a fixed or removable panel. This may be of a flexible or rigid material. It must be securely fastened in such a manner, that it cannot come loose at racing speed.

13.3 **Footwells:** The minimum width of the driver's footwell is 250mm and this width must be maintained over a height of at least 250mm.

13.4 **Equipment permitted in the cockpit:**

13.4.1 The only components which may be fitted in the cockpit are the following:

- Safety equipment and structures
- Electronic equipment
- Driver cooling system
- Fire extinguisher
- Instruments
- Seat/s and controls required to drive the car.

13.4.2 These components must be covered by a rigid protection if they have sharp edges, which may cause injury. Their fastenings must be able to withstand a 25G deceleration.

13.5 **Pedals:** The soles of the driver's feet, when he is seated in the normal driving position with his feet on the pedals and with the pedals in the inoperative position, shall not be situated forward of the vertical plane passing through the centre-line of the front wheels.

13.6 **Cockpit opening:** The opening above the driver's seat must not be less than the dimensions shown in the drawing 2C-1. However forward facing braces with padded covering situated above the cockpit opening are exempt from this measurement. Not withstanding the above, the maximum time for the driver to exit the cockpit must not exceed seven seconds.

Drawing 2C-1

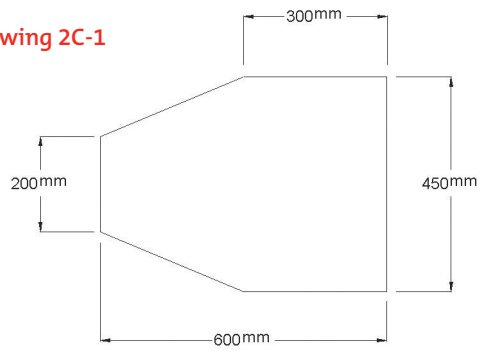

13.7 Brake lines may pass through the cockpit provided there are no connections in the cockpit area.

13.8 The steering wheel must be fitted with a quick release mechanism.

13.9 Where a head restraint is not part of the seat, then a separate head restraint with a minimum area of 400cm^2 must be fitted. Its surface must be continuous, without any protruding parts. The head restraint must not deflect more than 50mm under an 850N rearward force. The head restraint shall be located in a position such that it will be the first point of contact with the driver's helmet in the event of an impact projecting the driver's head rearwards when he is in the normal driving position. The distance between the driver's helmet and the head restraint should be kept to a minimum such that the helmet will move less than 50mm under the above-mentioned force.

© Confederation of Australian Motor Sport Ltd. All use subject to Conditions of Use at *www.camsmanual.com.au*

14. SAFETY STRUCTURES

14.1 Roll over structure: The main rollbar behind the front seat must meet the following dimensional criteria:

- **Height:** The top of the rollbar must be at least 50mm higher than the top of the driver's helmet when the driver is seated normally at the wheel.
- **Width:** The minimum width measured between the inside faces of the vertical members of the rollbar must be at least 200mm, measured 200mm below the top of the rollbar.
- **Longitudinal position:** The longitudinal distance between the top of the rollbar and the helmet of the driver seated normally at the wheel must not exceed 250mm.

The rollbar structure should conform to Schedule J, Type 1 (refer "General Requirements for Cars and Drivers"). The Material Specifications are as per Article 4 of Schedule J and the Rollbar and Braces dimensions are as per 1st Category cars under 700kg. Forward facing braces covered with anti-shock foam to the FIA 8857-2001 or SFI 45.1 standards and designed to protect the driver are acceptable.

14.2 Impact Absorption

14.2.1 Crushable Structure: A crushable structure consisting of a fire-resistant core (polyurethane foam or similar material) fitted between sheet material of minimum 1.6mm thickness is required. It must be fitted on the driver's side of the car between the front and rear wheels. It must not be less than 600mm long and must be displaced about the vertical axis of the steering wheel such that the minimum length either side is 230mm, with a minimum depth (thickness) of 50mm. The volume must not be less than 9000cm^3.

14.2.2 Frontal Protection: The vehicle must include an impact absorbing structure installed in front of the driver's feet. This requirement is satisfied if the chassis structure extends more than 600mm in front of the driver's feet. Alternatively a crushable structure of similar material construction to article 14.2.1 may be used. The minimum dimensions of this structure are 300mm x 150mm x 50mm. This structure must be securely attached to the chassis in front of the driver's feet. The placement of this structure must be with the 300mm dimension at right angles to the vehicle centreline, the 50mm dimension parallel to the vehicle centreline and the 150mm dimension generally vertical. The sheet material facings must be on both of the sides with the largest dimensions, ie, the 300mm x 150mm faces.

15. CHASSIS STRUCTURAL INTEGRITY

15.1 The aim of this article is to define a torsional rigidity requirement that will ensure a minimum chassis structural integrity standard in this sports-racing prototype category.

15.2 Chassis torsional rigidity is defined as the torque, measured in Nm, required to twist the chassis through one degree about an axis parallel to the longitudinal centreline of the chassis. There are two requirements that must be met; an overall rigidity figure, and a requirement that the torsional rigidity of the structure not vary by more than 15% over four subsections of approximately equal length along the chassis.

15.2.1 The minimum torsional rigidity shall be 2500 Nm/degree, as measured along the full length of the wheelbase of the car.

15.2.2 The angular deflection across each of four "subsections" of the chassis along the wheelbase, each of approximately equal length, must not vary by more than 15% from the theoretical uniform angular deflection of the chassis as per drawing 2C-2 below.

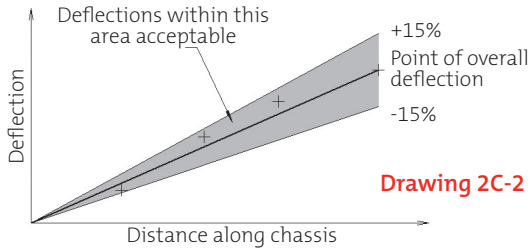

Drawing 2C-2

15.3 Test Method: The full test procedure, including detailed requirements, is available from the state SCRAA representative, or from CAMS Manager – Technical Services.

16. CLOSED CARS (CLASS B)

A sub-category designed primarily for cars in National competition that may be invited to compete in other competition where compatible.

16.1 Bodywork

16.1.1 Article 3.5 does not apply to closed cars and at least one door shall be provided for the driver.

16.1.2 Article 3.7.3 does not apply to closed cars.

16.2 Weight

Deleted 2004

16.3 Engine

16.3.1 Articles 5.1, 5.2, 5.3 and 5.4 do not apply to closed cars.

16.3.2 The engine shall be a liquid cooled, four stroke reciprocating piston unit. The maximum engine capacity shall be 1300cc and the engine shall be derived from a volume production motorcycle. The maximum operational speed shall be 11,000rpm.

© Confederation of Australian Motor Sport Ltd. All use subject to Conditions of Use at *www.camsmanual.com.au*

16.4 Wheels and Tyres

16.4.1 Article 12.1 does not apply to closed cars. For closed cars wheels are free subject to the requirements of Schedule E (refer "General Requirements for Cars and Drivers").

16.4.2 At the commencement of any race or practice session all tyres must:

(i) be of a type included of the current CAMS Production Car Tyre list.

(ii) have at least a minimum tread depth. The tread wear indicators as provided by the tyre manufacturer will be the definitive method of determining tread depth. At no time prior to practice or racing may any tread wear indicator be exposed or in the case where the indicator is a dimple in the tyre, worn below such indicator. This does not apply to the shoulder of the tyre. In all areas where the is no tread wear indicator, the original tread pattern must be clearly visible.

16.5 Cockpit

16.5.1 Article 13.1 does not apply to closed cars.

16.5.2 Article 13.6 does not apply to close cars. For closed cars the maximum time for the driver to exit the cockpit must not exceed seven seconds, commencing with the driver seated with the harness fastened and steering wheel in place.

© Confederation of Australian Motor Sport Ltd. All use subject to Conditions of Use at *www.camsmanual.com.au*