RALLY / ROAD

Tarmac Rally Technical Regulations – Modern

Note: This is a 'live' document and progressive refinements will be made.

Date of last update: 1 July 2008

These regulations are the property of CAMS and are copyright. They may not be reproduced without the permission of CAMS.

Throughout this document, any reference to CAMS shall mean the Confederation of Australian Motor Sport Ltd and any reference to FIA shall mean the Federation Internationale de l'Automobile.

APPLICATION OF THESE REGULATIONS

These regulations are based on the principle that modifications to the automobile or its components other than those specified below are forbidden.

The Classic and Modern regulations are designed to be read independently.

In each case, the regulations commence with matters which are generic in nature and are applicable to all automobiles of that age categories, regardless of their modification level. These deal largely with eligibility and/or safety issues rather than specific technical issues.

The regulations then move on to describe the three levels of modification that may be permitted, depending on the level of modification chosen.

Modern
Post-1981

General Requirements

1. PREAMBLE

These regulations are based on the principle that modifications to the automobile or its components other than those specified below are forbidden.

Each automobile must be of a model manufactured after 1981, or be a model/specification which precisely matches that of an automobile manufactured after 1981.

All automobiles must comply with these regulations, the relevant provisions of "General Requirements for Cars and Drivers" and Schedule R (save that mudflaps are not mandatory) in the CAMS Manual of Motor Sport.

These regulations do not supersede any civil requirements/regulations, and any such provisions are the responsibility of the competitor to comply with.

In all cases, the onus of proof in relation to eligibility matters lies with the competitor.

Due to the ever increasing levels of performance of modern automobiles, the philosophy of these modern regulations is to allow greater freedoms for automobiles which are demonstrably not as fast as others in their production form. Due to the availability of data, 0-60mph times have been chosen as the defining performance criteria.

Automobiles shall be divided into one of four modification Groups: M1, M2, M3 and M4. The specific requirements for these modification groups follow.

Only those automobiles which have the level of performance deemed appropriate will be permitted the higher level of modifications of M2 and M3. However, those automobiles which are permitted M2 or M3 may be built to a lesser level of modification (eg, M1), and compete in that category.

Only automobiles meeting the full requirements of listed categories will be permitted to participate in the M4 classification, including the use of the relevant inlet air restrictors. It is important to note that World Rally Cars and World Rally Car homologated parts *are not* permitted.

CAMS may produce recognition papers which will define the specification of a given model, and if such papers have been produced they must be presented at scrutiny by the competitor.

2. IMPLEMENTATION

These regulations will be the sole regulations for Tarmac rallies**, other than those conducted as part of the Australian Rally Championship – refer Sporting Regulations for eligibility.**.

© Confederation of Australian Motor Sport Ltd. All use subject to Conditions of Use at *www.camsmanual.com.au*

3. ELIGIBLE AUTOMOBILES

3.1 All automobiles must have at least two seats.

3.2 Have been capable of achieving road registration when first released.

3.3 In cases where production of a model commenced before the cut-off date and continued after that date, automobiles actually manufactured after this date are considered to be eligible provided they were produced to exactly the same specification as the automobiles built prior to the date. This provision known as "model run-on" terminates upon a change in automobile specification having being implemented by the automobile manufacturer.

3.4 Automobiles having a published and/or proven 0-60mph acceleration time of less than 3.5 seconds in standard form are not eligible to compete. Should the production form of an automobile which has competed in tarmac rallies be proven to be faster than 3.5 seconds 0-60mph after its initial acceptance, then that automobile will be eligible until the end of the following year from the time at which the time is confirmed.

3.5 Minimum production numbers

(i) For ~~unique~~ automobiles manufactured in Australia by a low volume motor automobile manufacturer [Note 1] other than those noted in (ii) below and made available for sale to the public: **5**

Note: In addition to the minimum requirements outlined in Schedule J, Safety Cage Structures, each low-volume automobile shall be fitted with "doorbars" as shown in diagram 253-7, 253-8, 253-12 or 253-17 of Schedule J.

Organisations producing more than 10 automobiles per annum or which are deemed a 'tuning' and/or 'performance enhancing' organisation (at the discretion of CAMS) will normally be eligible only for recognition under (ii) or (iii).

(ii) For automobiles manufactured in Australia by companies including [Note 2] Holden, HSV, Ford, FPR, Mitsubishi or Toyota and made available for sale to the public: **10**

(iii) For automobiles manufactured outside Australia: **500**

Note: Automobiles or models of automobiles (eg, BMW M3R, Mazda RX-7 SP) that have competed in a CAMS-sanctioned Tarmac Rally prior to 30 June 2006 which do not meet the production criteria above shall continue to be eligible to compete, with the onus of proof on the competitor and subject to that automobile being subject of:

(a) Approval by ARCom
(b) A CAMS/FIA recognition document.
(c) Inclusion on the eligible automobiles list.
(d) Prior to being eligible, the applicable production numbers must first be met.

Notes:

1. Low-volume/'boutique' manufacturers must first register with CAMS via the registration form available on request from *rally@cams.com.au*. Recognition as such a manufacturer is at CAMS' sole discretion.
2. Other manufacturers may be added from time to time.

3.6 Summary of modification levels

M1	This allows a very limited freedom of modification to make automobiles more suited to rally competition. *Automobiles having a 0-60mph acceleration time from a standing start of between 3.5-4.8 seconds in standard form are restricted to level M1 modifications.*
M2	This allows a **limited freedom** of modification which allows increased performance and greater suitability for rally competition. *Automobiles having a 0-60mph acceleration time from a standing start of 4.8- 6.8 seconds in standard form are permitted Level M1 or M2 modifications.*
M3	This allows a considerable freedom of modification which allows significantly increased performance and greater suitability for rally competition. *Automobiles having a 0-60mph acceleration time from a standing start of greater than 6.8 seconds in standard form are permitted Level M1, M2 or M3 modifications.*
M4	FIA Group N and CAMS Group N(P). or CAMS PRC* automobiles eligible for and modified to the regulations outlined in the CAMS Manual of Motor Sport or the FIA web site as appropriate.
M5	This category is provided for automobiles that are powered by alternative energies such as electric or other hybrid automobiles as approved by ARCom and/or CAMS and subject to acceptance of entry by event organisers.

3.7 *0-60 mph* acceleration times will be taken from published data. Primary Sources may include EVO magazine (UK); Motor magazine (Aust.); *www.supercars.net*

3.8 For automobiles modified to M2 and M3, engine capacity may not exceed 6000cc normally aspirated or 4000cc forced induction.

3.9 Application to alter the following classifications can be made to the CAMS Recognition Committee accompanied by supporting documentation.

Owners of low-volume automobiles may make application to CAMS for a Recognition Document to be issued.

- **Options:**

The onus is at all times on the competitor to provide proof that each component is in fact a genuine option,

© Confederation of Australian Motor Sport Ltd. All use subject to Conditions of Use at *www.camsmanual.com.au*

and if this cannot be provided the Technical Commissioner or Chief Scrutineer may either request that the component be removed (prior to the start of the event) or otherwise instigate a charge.

Options/accessories/parts (henceforth described as the 'option') may be permitted in certain areas, subject to the following:

3.10 General requirements

(i) To be acceptable in competition, each option shall comply with at least one of the following requirements:

(a) It shall be listed by the manufacturer as a 'production option', ie, an optional item or specification listed on the automobile build sheet and fitted at the time of build of the automobile. (For some automobiles the options with which it was built are listed on the automobile ID plate).

OR

(b) It shall be an option listed and authorised by the manufacturer in official sales literature and to which a manufacturer's warranty applies and which may be fitted at an authorised dealership.

OR

(c) The option shall have been proven to have been supplied by the Manufacturer in more than the minimum production quantities for eligibility, in automobiles registered for road use.

(ii) In addition to 3.10(i) above, an option shall comply with ALL of the following requirements:

(a) Each option must comply with the regulations of the relevant road authority and be ADR compliant.

(b) Each option included on the automobile must have been available during the model run of the automobile.

(c) Where a recognition document has been issued for a particular automobile, each option shall be specified in the recognition document.

(d) Each option must be permitted under the provisions outlined in 3.11 and 3.12.

3.11 Specific requirements

Options will only be permitted in the following areas and then only when in compliance with the requirements set out in 3.10:

(i) All areas where the Tarmac Rally Technical Regulations provide freedom of modification.

(ii) **Suspension:**

(a) **Elastomeric bushes:** alternate 'option' bushes, also elastomeric in nature but which may be of different hardness.

(b) **Sway bars:** one alternate size of sway of the same design, material, and which are interchangeable with the original.

(iii) **Aerodynamic options:**

Each aerodynamic 'add-on' device may be considered as an option, provided it complies with the following requirements:

(a) The rear aerodynamic device of an automobile which is of sedan type (ie, three volume) configuration shall comply with the dimensions outlined in the diagram below. The rear aerodynamic device of an automobile which is of hatchback type (ie, two volume) configuration shall respect the same dimensions in 8.2.5(iii) and (iv) below, but at its top most point shall be not more than 25mm above the roof.

(b) At its lateral extremities, the rear aerodynamic device must join the bodywork, and it must be entirely contained within the frontal projection of the automobile without its rear-view mirrors.

(c) The material of construction for the rear aerodynamic device is free save that no carbon fibre, Kevlar or titanium may be used.

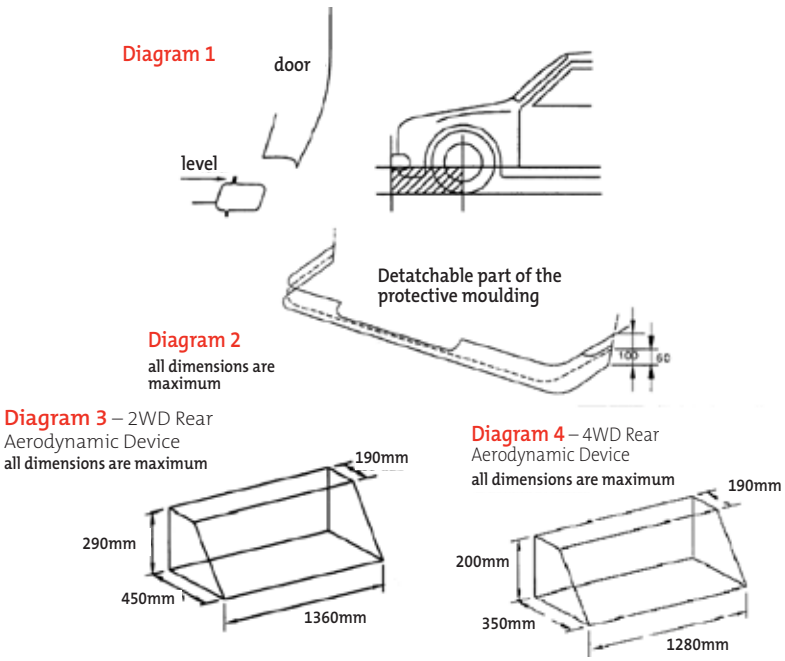

© Confederation of Australian Motor Sport Ltd. All use subject to Conditions of Use at *www.camsmanual.com.au*

(iv) **Other body options:** 'Side skirts' fitted between the front and rear wheel arch. The side profile shall be no more than 100mm high, and which are entirely contained within the frontal projection of the standard bodywork without its rear-view mirrors.

(v) **Interior:** Additional gauges, gauge pods, consoles.

3.12 Engine options

No option is permitted that is related to the engine or an engine accessory.

Automobile Classification List

Note: It is the responsibility of Competitors to produce proof of production of the minimum number of automobiles required. Some automobiles on the following list included in M1-M3 may not meet the minimum production requirement.

The Automobile Classification List is a table which includes automobiles in the column which indicates the highest level of modification permitted to that particular type of automobile. This is based on the performance of the automobile as standard. In general, the faster the automobile, the fewer modifications are permitted.

The modification levels shown below are the maximum levels of modification that can be applied to the automobile.

Once the permitted level of modification is determined, the relevant regulations (ie, M1, M2 or M3) are referred to.

If the automobile is modified to a lower level than the maximum allowed, where a separate class is provided by the organiser, it may compete in the appropriate modification category.

Automobile make	M1	M2	M3	Automobiles confirmed as ineligible
AC	212 s/c	Cobra CRS		
Alfa Romeo		147 GTA GT V6 GTV 3.0 V6 156 GTA	Most other*	
Alpina				Roadster S
Ariel	Atom 190	Atom		
Ascari	K21			
Aston Martin	Vantage s/c	DB7 94-99 DB7 GT 03-04 DB7 Vantage DB9 DB7 Vantage Volante coupe Vanquish Vanquish SDP Vanquish S		
Audi	RS4	A3 3.2 Quattro A4 3.0 Quattro S3 Quattro TT Quattro (225 hp) TT 3.2 Quattro S4 A6 4.2 Quattro S6 A8 4.2 Quattro S8 Quattro 20V TT 3.2 Roadster DSG Audi S4 Cabriolet RS 6	TT Roadster 225hp A6 4.2 Quattro 98-04 Most other*	
Bentley	Arnage T Arnage R Azure Continental GT Continental GT coupe Continental R Continental T			

© Confederation of Australian Motor Sport Ltd. All use subject to Conditions of Use at *www.camsmanual.com.au*

Automobile make	M1	M2	M3	Automobiles confirmed as ineligible
BMW	M5 E60 Alpina B7 Z8 00-03 M Coupe 98-03	330i SE 330i Sport 540i SE (E39) 99-03 545i SE 535d Sport M5 (E28) M5 (E39) M5 (E34) Alpina B10 V8S 750i Sport 745i 330Ci 330i Clubsport M3 M3 cabriolet M3 CSL M3 (E30) 86-90 (2.5l) M3 (E36)93-98 M3R (Aust. version) 630Ci 645Ci 645Ci conv M Roadster 92-02 Z4 3.0i	530i SE 330 Ci cabriolet Z4 2.5i M3 (E30) 86-90 (2.3l) Most other*	
Bristol				Fighter *TBC*
Bugatti				Veyron EB 110 / 110S
Bullet	*TBA*			
Cadillac	CTS-V		Most other*	
Caterham	7 R300 7 R400 7 R500	7 Classic 7 Roadsport 115 7 Roadsport 140 7 SV		CSR260
Chevrolet	Corvette C6 Z06		Most other*	
Chrysler / Dodge	SRT 10		Most other*	Viper GTS-R *TBC*
Citroen			Most*	
Clubman (All)	All turbocharged All V8	Other (subject to performance)		
CSV	Veloce *TBC*	Mondo GT *TBC*		
Daihatsu			Most*	
Daytona	*TBA*			
Deronda				F400
Elfin	MS 8 Streamliner			

continued ...

© Confederation of Australian Motor Sport Ltd. All use subject to Conditions of Use at *www.camsmanual.com.au*

Automobile Classification List (continued)

Automobile make	M1	M2	M3	Automobiles confirmed as ineligible
Ferrari	F430 360 Modena 360 Challenge Stradale 360 Modena Spider 575M Maranello 575M Fiorano 575M HGTC 612 Scaglietti 550 Maranello 97-03F355 F1 Berlinetta 97-99 F40	456M GT 288 GTO 84-85 512 TR 92-94		F50 Enzo
Fiat		Coupe 20v Turbo	Most other*	
Ford	GT (40) Saleen S281 SC	Focus RS Escort RS Cosworth Mondeo ST220 Mustang GT Sierra RS Cosworth 4x4 Ford Falcon XT Ford Falcon XT V8 Falcon XR6 Turbo Falcon XR8	Most other*	
FPV		FPV F6 Typhoon FPV Falcon GT FPV GT-P		
Ginetta				G20 *TBC*
Giocattolo		Giocattolo		
Grinall				IV
Holden		Commodore SV6 / SV8 Commodore SS V8 (all models except those listed in M1 or M3) Monaro CV8 Monaro CV8 T3	Most other* VT Commodore SS V8 Series 1 (4.9lt, 179Kw)	
Honda		Civic Type R Integra Type R Accord Type S2000 (2004) NSX	Integra Type S	
HSV	HSV GTS s/c	HSV GTS HSV Clubsport HSV Clubsport R8 HSV GTO Coupe HSV Coupe 4		
Hyundai			Most*	
Invicta				SI *TBC*
Jaguar	JP1 XJ220 89-94 XJR V8 s/c	S Type 4.2 V8 S Type R XJR XJR 4.0 00-03 XK8 XK8 cabriolet XKR XKR R - Performance XKR conv XKR R Coupe	All other	

© Confederation of Australian Motor Sport Ltd. All use subject to Conditions of Use at *www.camsmanual.com.au*

Automobile Classification List (continued)

Automobile make	M1	M2	M3	Automobiles confirmed as ineligible
Lamborghini	Murcielago Gallardo Diablo 6.0 00-02Diablo GT	Countach QV 88-91		
Lancia		Delta Integrale	Most other*	
Lexus		GS 430		
Lotus	Elise S2 Sport 190 Elise Sport 200 340R Exige S1 Esprit Sport 350	Carlton Elise S1 / Elise S2 Elise S2 111S Elise 111R Elise S2 Sport 135 Elise S2 135R Elan SE Exige S2 Exige Performance Pack	Most other*	
Marcos	TSO R/T Mantis GT 4.6 s/c			
Mazda		MX-5 SP RX-7 92-96 RX-7 SP RX-8	Most other*	
Mercedes Benz	S65 AMG CL55 AMG CL65 AMG SL600 S65 AMG SL65 AMG conv SL600 conv SLR McLaren	C55 AMG C32 AMG CL600 SLK 350 AMG SLK CLK500 CLK55 AMG 00-02 SL500 conv SLK55 SL55 AMG conv SLK55 AMG	Most other*	
Maserati		Coupe Gransport Quattroporte 3200GT 98-02 Ghibli Cup Cambiocorsa 4200 Spyder		MC12 *TBC*
MG		ZT 260 V8 SV-R	Most other*	
Mini (BMW Type)		Cooper S Works	Cooper Cooper S	
Mitsubishi		Evo 9 RS Evo 8 FQ-260 Evo 8 Evo 8 MR Evo 7 Evo 7 FQ-300 Evo 6 Evo 6 Makinen All other Evo	Most other*	Evo 8 MR FQ-320 Evo 8 MR FQ-300 Evo 8 MR FQ 340 Evo 8 MR FQ-400 Evo 7 RS Sprint Evo 7 Extreme Evo 6 RS Sprint
Morgan		Aero 8 Plus 8 4.6 27-04 Roadster V6		

© Confederation of Australian Motor Sport Ltd. All use subject to Conditions of Use at *www.camsmanual.com.au*

Automobile Classification List (continued)

Automobile make	M1	M2	M3	Automobiles confirmed as ineligible
Nissan	GT-R (R35) Non-V Spec model 08-	Sunny / Pulsar GtiR Gti-R 350Z 350Z Track 350Z 35th anniversary 200SX 350Z convertible Skyline GT-R (R33) 95-98 Skyline GT-R (R32) 89-94 300ZX 89-98 Skyline GT-R (R34) 99-02	Most other*	Skyline GT-R (R34) Z Tune
Noble	M12 – GTO 3R M400 M12 GTO 00-03			
Pagani				Zonda Zonda Roadster
Peugeot			206 Gti 180 206 Rallye 406 V6 Coupe Most other*	
Porsche	911 GT2 (993) 911 GT2 (996) 911 Turbo (996) 911 GT3 RS 911 GT3 911 Turbo (993) 911 Carrera (3.4) 911 Turbo Cabriolet 911 Carrera 4S (997) 968 Turbo RS	911 Carrera 4 (3.4) 911 Carrera S Cabriolet 911 Carrera 4 911 C2 Cabriolet 911 Carrera 911 Carrera 4S 911 Carrera (993) 911 Speedster ('89) 911 Targa 911 C4 Cabriolet 911 C4S Cabriolet Boxster (Mk1) Boxster S (Mk1) Boxster Boxster S 928 GTS 944 Turbo SE 968 Club Sport	944 S2	
Proton			Most*	
Radical	SR3 Tracksport *TBA* SR4 Tracksport *TBA*			
Renault		Renault Sport Clio 182 Renault Sport Clio 182 Cup Renault Sport Clio V6 255 Renault Sport Clio V6 Renault Sport Megane 225 Renault Sport Megane Trophy Alpine A610	Most other*	
Rolls Royce		Phantom		
Rover			Most*	
SAAB		9-3 Viggen	9-5 Aero Most other*	
SEAT			Leon Cupra R225 Most other*	
Skelta	*TBC*			

© Confederation of Australian Motor Sport Ltd. All use subject to Conditions of Use at *www.camsmanual.com.au*

Automobile Classification List (continued)

Automobile make	M1	M2	M3	Automobiles confirmed as ineligible
Smart		For four Brabus	Most other*	
Subaru		Impreza WRX Impreza WRX Sti Impreza WRX PPP Impreza P1 Impreza WRX Type UK Impreza WRX Sti PPP Impreza WR 1 *TBC* Impreza RB5 PPP Impreza 22B Impreza Turbo Impreza S202 Legacy 3.0R Spec B Liberty GT STi Type RA Spec C	Most other*	
Suzuki			Most*	
Toyota			Celica GT-Four Most other*	
TVR	T350T Tamora Chimaera 5.0 93-03 T350C Sagaris Cerbera 4.2 Cerbera 4.5 Cerbera Speed 12 Tuscan Mk 2 TVR Tuscan S Mk2 Cerbera C12	Chimaera 4.5 93-03 Chimaera 4.0 92-01 Cerbera Speed Six Griffith 4.3 92-93 Griffith 500 93-01		
Ultima				GTR Can Am GTR 640
Vauxhall	VX220 Turbo VXR220	Astra Coupe turbo Astra Coupe 888 Carlton Gsi 24V VX220 Monaro Monaro VXR 6.0 Vauxhall Monaro VXR	Most other*	
Volvo		S40 T5 S60 T5 S60R	Most other*	
Volkswagen		Golf R32 Mk IV Golf Gti Mk 5 Corrado VR6 Passat W8 4 Motion	Most other*	
Westfield	Megabusa *TBC* SEiGHT *TBC* XTR4 *TBC*			
Wiesmann	Roadster MF3 *TBC*			

*** Most / Most other** - Research at the time of writing has indicated that automobiles other than those listed which are made by the manufacturer will be in all probability be classified as M3. However, due to the frequent introduction of new models or the possibility of incomplete data, it is not possible to categorically determine this.

TBA - To be advised. Model classifications have not yet been determined.

TBC - Information indicates this is the appropriate classification, but has not yet been finally confirmed.

This list is not necessarily definitive, and may be subject to addition and/or change by CAMS based on

© Confederation of Australian Motor Sport Ltd. All use subject to Conditions of Use at *www.camsmanual.com.au*

production numbers and/or performance, via the CAMS Recognition Committee whose decision is binding.

CAMS will consider changes to automobile classification by written submission which must be accompanied by supporting evidence (normally at least two independent sources of data would be required for consideration) to:

CAMS Technical Officer
PO Box 147
Caulfield East VIC 3145
or *rally@cams.com.au*

The application fee is $55 including GST.

4. CLASSES

4.1 Age

Automobiles shall be divided into one of three age categories:

(a)	1982 up to 1990	Early Modern
(b)	1990 up to 1997	Late Modern
(c)	1998 onward	Contemporary

Further age categories may be included by organisers, which shall be outlined in the supplementary regulations.

4.2 Capacity

The following capacity classes will be provided:

(1)	Up to 2500cc
(2)	2501cc to 3500cc
(3)	3501cc to 4500cc
(4)	Over 4500cc

These classes include relevant turbo and rotary equivalence factors and resultant capacity from allowed increases.

Maximum capacities are as follows:

Group M1	- No specified capacity limit
Group M2, M3	- Naturally aspirated automobiles: 6000cc
	- Supercharged and turbocharged automobiles: 4000cc actual swept volume
Group M4	- As per applicable technical regulations

4.3 Showroom

At the discretion of organisers, a "Showroom" category may be included in event supplementary regulations, which divides automobiles into retail price categories as follows:

Up to $20,000
$20,000 and up to $30,000
$30,000 and up to $40,000
$40,000 and up to $50,000
$50,000 and up to $80,000
$80,000 and up to $140,000
$140,000 and over

Such automobiles must have been available for retail sale as a new automobile in Australia from 1998 and their prices listed in 'The Red Book'.

4.4 Referral to classes

For the purposes of shortening class references, the following system may be utilised:

Modification level, followed by Age classification, followed by capacity class.

For example, an automobile which is modified to M1 level was built in 1985 and is 2600cc capacity would be referred to as M1A2.

4.5 Classes for different levels of modification

At the discretion of organisers, classes for automobiles modified to lower levels than permitted (eg, automobile actually M1 modification level, though M3 permissible), may be provided in addition to the above. If offered, this will be outlined in event supplementary regulations.

© Confederation of Australian Motor Sport Ltd. All use subject to Conditions of Use at *www.camsmanual.com.au*

5. DEFINITIONS

5.1 Ancillary items

Ancillary items are deemed to be as follows; starter motor, alternator, power steering pump, air conditioning compressor, generator, emissions air pump.

5.2 Automobile

Refer CAMS National Competition Rules.

5.3 Elastomer

An elastic solid composed of primarily hydrocarbon material with widely spaced cross linking bonds. Such material shall have a maximum Shore (A) Hardness of 100, and a maximum tensile strength of 60 MPa.

5.4 Elastomeric bushing

A flexible coupling between two rigid structures that provides limited radial and axial freedom of movement. Bushings with less than 4.0mm of elastomer between the rigid structures shall not be regarded as elastomeric.

5.5 Manufacturer

A manufacturer is deemed to be a company which is the producer of complete automobiles in a quantity deemed sufficient by CAMS. Proof may be the recognition of such by a recognised civil registration authority – eg, the automobile is registered or permitted in the name of the manufacturer by a registration authority.

5.6 Mechanically identical

A component will be considered as being 'mechanically identical' if it performs exclusively the original function/s in the same manner as foreseen by the manufacturer and it permits the attachment of any secondary components in the original manner and without modification of those components. In addition, for the purposes of these regulations, the material and dimensions of the component must be equivalent to the original.

5.7 Modern replica

An automobile which has been constructed as a replica of a period automobile, but which employs any modern mechanical components and / or materials.

5.8 Muffler

A muffler is a section of the exhaust system that must reduce the exhaust noise level of the automobile. The cross-section of the muffler must be at least 170% of that of the inlet pipe and contain sound deadening material. The sound deadening material may take the form of a 45% perforated tube or synthetic packing.

The length of the muffler must be between three and eight times the inlet diameter.

The muffler may be supplied as a series part welded to a pipe but the pipe is not considered as part of the muffler.

5.9 Original

A component which is an identical reproduction of that originally fitted, and is indistinguishable from it in all respects.

5.10 Period

In these regulations, the word 'period' shall refer to the Appendix K age periods as defined in 'General'.

5.11 Pivot point – suspension

(i) **Spherical bearing:** The geometric centre of the spherical surface about which suspension movement occurs.

(ii) **Plain or elastomeric bushing:** The midpoint of the bushing along the axis of primary suspension movement.

5.12 Recognised model

A model which CAMS at its sole discretion recognises as a model of automobile produced by a manufacturer in a given specification.

5.13 Reconditioning

To repair or restore to good or close to original condition, with no mechanical or performance advantage over its original condition.

5.14 Registration in the country of origin

Means the ability for an automobile to be registered in the country in which it was first manufactured and/or released.

5.15 Rotary engines

Rotary engines shall be deemed to be engines with rotary (rather than reciprocating) motion of the compressing medium (Wankel type). A rotary engine shall be defined as the rotor housings, intermediate and end plates and the eccentric (crank) shaft.

5.16 Rotary port modifications

Mild/extended porting shall be defined as a single induction port per end/intermediate plate, per rotor, extended beyond the original induction port size and shape; save that it may not extend beyond the region traversed by the original rotor seal, the size and shape of such a port is free.

Peripheral porting is defined as a port on a rotary engine allowing the passage of gasses through the periphery of the rotor housing.

Bridge porting shall be defined as where the induction is accomplished utilising two separate induction ports per end/intermediate plate, per rotor, but not extending beyond the original outer edge of the inner water seal.

Any bridged induction port that is extended radially beyond the original outer edge of the inner water seal

© Confederation of Australian Motor Sport Ltd. All use subject to Conditions of Use at *www.camsmanual.com.au*

is, for the purposes of these regulations, considered to be a peripheral port.

5.17 Standard specification

As originally supplied from the manufacturer, including allowable production tolerances.

5.18 Suspension pick-up point

A bracket, lug or similar mechanical component attached to the fully sprung part of an automobile to which is attached a partially unsprung suspension component, and about which such suspension component moves through an arc or solid angle consequential to normal suspension travel.

6. PERMITTED MODIFICATIONS

Modifications to the automobile or its components other than those specified below are forbidden.

6.1 CAMS may produce recognition papers which will define the specification of a given model, and if such papers have been produced they must be presented at scrutiny by the competitor. If CAMS issues a recognition paper for a recognised model, this will be considered the definitive document.

Irrespective of the parts for which the present article lays down freedom of modification, the original mechanical parts necessary for the propulsion as well as all accessories necessary for their normal functioning, having undergone the normal machining operations laid down by the manufacturer for series production may be subjected to all tuning operations through finishing, scraping but not replacement., provided that the origin of the series production part may always be established, its shape may be ground, balanced, adjusted, reduced or modified through machining.

However, the modifications permitted by the above paragraph are allowed on condition that the weights and dimensions mentioned on the FIA homologation form, recognition documents, manufacturers manual and/or published specifications and workshop manuals are respected. If CAMS issues a recognition paper for a recognised model, this will be considered the definitive document.

6.2 Fasteners

Throughout the automobile, any nut, bolt, screw may be replaced by any other nut, any other bolt, any other screw and have any kind of locking device (washer, lock nut etc.).

6.3 Addition of material and parts

Any addition of material or parts is forbidden unless it is specified or required by an article in these regulations.

Any material removed is not to be reused.

Restoration of body shape and chassis geometry, following accidental damage, is permissible by the addition of the materials necessary to effect the repairs (body filler, weld metal etc); other parts which are worn or damaged are not to be repaired by the addition or attaching of material unless an article in these regulations allows appropriate freedom.

7. GENERAL REQUIREMENTS

General modifications to the Chassis, Sub-Frame, Monocoque and interior trim to facilitate the fitment of mandatory equipment and for the fitment of any other items permitted under specified freedoms within these regulations, are permitted.

7.1 Seats

(i) Seats and their mountings form an integral part of the primary safety system of an automobile.

Seats for the crew shall comply with Schedule C or FIA 8855-1999. Seats complying with the FIA 8855-1999 standard are compulsory in international events.

(ii) The material from which seats are manufactured is free, including carbon fibre and Kevlar.

(iii) It is the responsibility of the Competitor to ensure seat mountings are engineered with adequate strength to withstand the forces that may be experienced during a sudden stop.

(iv) The front seats may be moved rearwards but not beyond the vertical plane defined by the front edge of the original rear seat (where originally fitted). The limit relating to the front seat is formed by the seatback at its rearmost point where the seat does not incorporate the headrest, and if the headrest is incorporated into the seat, by the rearmost point of the driver's shoulders.

7.2 Harnesses

A Type A harness (ie, a harness which includes a crutch strap) complying with the provisions of Schedule I (refer "General Requirements for Cars and Drivers") is required for each crew member.

For events entered on the FIA International Calendar, harnesses complying with FIA 8853/98 or subsequent FIA standards are required.

7.3 Safety cage or rollover protection

Each automobile is required to be fitted with a safety cage or rollover protection structure (ROPS) conforming to the provisions of Schedule J (refer"General Requirements for Cars and Drivers").

7.4 Fire extinguishers

Each automobile is required to carry a fire extinguisher or fire extinguishers complying with the provisions of Article 4 of Schedule H (refer "General Requirements for Cars and Drivers").

7.5 First aid kits

Each automobile is required to carry a first aid kit complying with Article 12 of Schedule R (see "General Requirements for Cars and Drivers").

© Confederation of Australian Motor Sport Ltd. All use subject to Conditions of Use at *www.camsmanual.com.au*

7.6 OK/SOS signs and safety triangles

Each automobile is required to carry an OK/SOS sign and Safety Triangles in compliance with Article 12 of Schedule R.

7.7 Lighting

Lighting shall be in accordance with Article 4 of Schedule R, and all lamps must comply with the Government regulations for the State or Territory in which the event is held.

7.8 Fuel

Fuel shall only be Commercial Fuel or Unleaded Racing Fuel as defined by CAMS in Schedule G (refer "General Requirements for Cars and Drivers").

7.9 Fuel tanks

(i) Fuel tanks are of free but safe design.

(ii) FIA FT3 standard fuel tanks are recommended. If an FT3 fuel tank is being utilised, the minimum amount of local modification of the bodywork to fit the fuel tank is permitted. An auxiliary fuel pump, to enable transfer of fuel to a swirl pot if required is permitted.

7.10 Fuel pumps

On any automobile with electric fuel pump/s, the power supply to all such fuel pumps must be cut off after a maximum of a six second absence of crankshaft revolution.

7.11 Wheels and tyres

(i) Wheels and tyres must comply with Schedule E (refer"General Requirements for Cars and Drivers").

Wheels may be manufactured only from aluminium alloy, steel or magnesium.

Tyres must be marked legal for road use as indicated by the presence of either DOT or ECE markings

Any tyres marked 'not for highway use' / 'for racing use only' or similar are not permitted.

(ii) The minimum tyre aspect ratio percentages are:

Groups M1, M2, M3

*** post-1982 40**

Lower aspect ratios are not permitted unless specified by the manufacturer as standard, in which case that profile is permitted.

Tyres that are not marked with a percentage aspect ratio by the manufacturer during the manufacturing process are not permitted.

(iii) Tyres must be not less than the load ratings specified by the manufacturer of the automobile where specified.

(iv) Tyres must be fitted in accordance with the tyre manufacturers published specification. The fitment of tyres to rims which are either too narrow or too wide for the tyre in question shall result in exclusion from the event at minimum.

(v) Tyres must have a minimum of 1.5mm of tread depth over at least 60% of the tread face at the beginning of each leg.

It is the responsibility of the competitor to ensure that tyres remain in conformance with any civil regulations during liaison stages.

(vi) In all cases, the correctly inflated tyre shall not foul the body, suspension or steering at any point in full movement of these components.

(vii) Wheel fixations by bolts may be changed to fixations by pins and nuts provided that the number of attachment points and the diameter of the threaded parts as indicated on FIA drawing # 254-1 is respected.

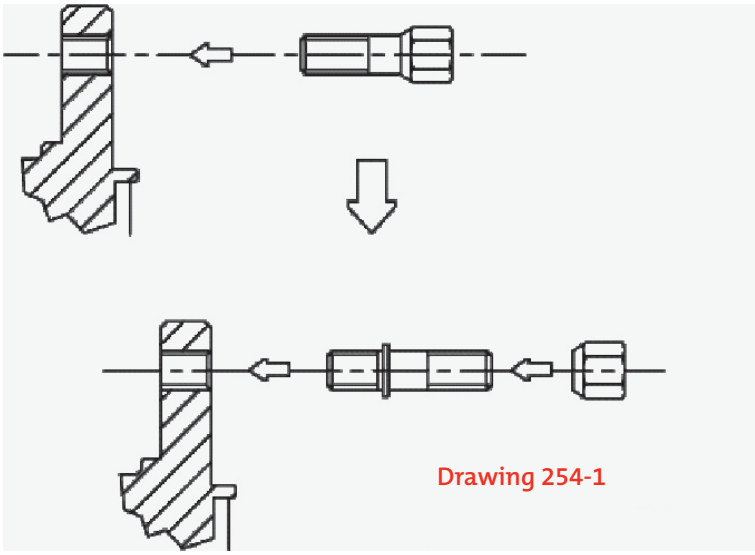

© Confederation of Australian Motor Sport Ltd. All use subject to Conditions of Use at *www.camsmanual.com.au*

7.12 Track

Except where varied by the following specific regulations, the track shall conform to the following requirement:

The upper part of the tyre, down to the wheel rim flange over the wheel hub centre must be within the perimeter of the automobile when viewed vertically from above (refer diagram 5).

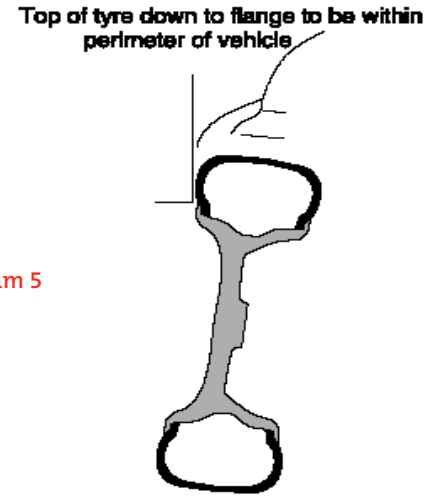

Diagram 5

7.13 Weight

(i) **General**

(a) the minimum weight must be in accordance with the manufacturers original specifications, provided either by details obtained from the following Government web site *http://rvcs-prodweb.dot.gov.au/* (for automobiles listed), FIA or CAMS homologation/recognition papers, workshop manuals or sales specifications (in that order of priority).

This weight will be deemed to include all liquid tanks to be at the normal operating levels as foreseen by the automobile manufacturer.

(b) Minimum competition weight for M1 and M2 will be established by taking the minimum weight as established in (a), plus 43kg (for tools, jack, one spare wheel and safety equipment). For M3, the minimum competition weight shall be established by taking the minimum weight as established in (a), less 5%, plus 43kg.

(c) For the purposes of confirming weight during the competition, the organisers may refer to the minimum competition weight of the automobile, which is the minimum weight plus the actual weight of the crew as measured at pre-start scrutiny.

(d) If the organisers intend to use competition weight as the reference this intention will be stated in the supplementary regulations for the event.

(e) It is recommended that fuel not be used for ballast as there could be miscalculation by the crew which could result in the automobile being underweight when measured.

(ii) **Minimum weight for Group M1, M2, M3 and M4**

If required, the minimum weight will be checked by weighing the automobile without persons or luggage on board, measured in accordance with 7.13(i) of these regulations. The minimum competition weight must be maintained at all times.

7.14 Materials

Unless specifically authorised in these regulations, and unless standard, the use of carbon fibre and/or Kevlar components is not permitted.

7.15 Bonnet restraints

Each automobile must have at least two independent fastening systems, of adequate strength and limited extensibility, which simultaneously hold the bonnet closed.

7.16 Steering

The steering wheel may be replaced by another, providing that:

(a) it is not made of wood

and

(b) complies with any relevant civil regulations such as size.

The addition of a power steering system fluid cooling system is permitted.

7.17 Air bags

SRS air bags may be disabled and/or removed. If an air bag is not disabled, then nothing shall be mounted in the path of deployment of the air bag (eg, distance measuring devices). If disabled, a decal to that effect (specific to that event) shall be affixed to the automobile adjacent to, or under, the driver and passenger windows.

© Confederation of Australian Motor Sport Ltd. All use subject to Conditions of Use at *www.camsmanual.com.au*

7.18 On-board cameras

Subject to approval of the organisers, cameras and video recorders may be fitted to automobiles competing in tarmac rallies.

Where the camera and recorder are combined into a unit (Camcorder) the unit must be fitted only to the rollover protection structure or other substantial part of the body shell of the automobile behind the crew. It must be mounted inside a safety cradle which fits closely around the body of the unit, which shall be from aluminium plate at least 5mm thick. The camcorder shall be held in place by a strap of at least 3mm x 25mm aluminium alloy held tight by means of self locking fasteners. The strap and cradle may be lightly padded. The cradle shall be constructed as shown in Diagram 6 below and held to the rollover protection by means of a metal clamp and at least two 6mm diameter class 8.8 bolts. Rollover protection type padding is to be placed on the outside of the cradle.

Where the camera is a small separate unit (ie, 'lip stick' lens), it need not be fitted inside the cradle described above, but the recorder shall be mounted in the luggage compartment, or where this is impractical (eg, hatchback automobiles), it shall be mounted inside a box made from aluminium of a minimum thickness of 5mm, held down by at least three 6mm diameter class 8.8 bolts.

The mounting of any on-board camera shall be inspected and approved by the Chief Scrutineer.

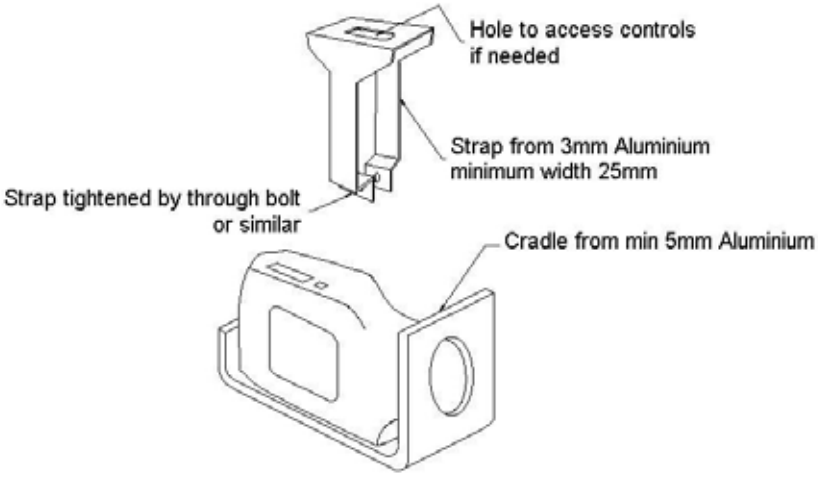

Diagram 6

Alternative cradle designs may be permitted subject to approval by the organisers on the advice of the Chief Scrutineer. No camera may be fitted in such a way that it relies solely on the camera's original tripod mounting.

7.19 Pedals

Removable 'pads' on brake, clutch and accelerator pedals are free.

7.20 Navigation instruments

Electronic or mechanically-driven navigation instruments may be fitted provided that their sole function is to provide distance and speed measurements of the automobile.

7.21 Component substitution criteria

(i) The following tests will be applied to requests for usage of components in substitution for the original or genuine replacement original components for automobiles manufactured prior to 31 December 1990.

1. *Is the original component no longer available or available only at an exorbitant cost, due to very limited availability?*

   If it is available, then the application will be rejected, because originality is the prime historic criteria.

   If it is not practically available then:

2. *Will the substitute component give a demonstrable performance gain?*

   Inevitably, any more modern substitute component for a competition automobile will have taken advantage of the gains in technology since the original component was manufactured, so some gain is axiomatic and may be acceptable, depending on the level of gain. Many substitute components are described as not giving a performance gain, but do provide improved durability or reliability. Improvements in reliability (usually strengthening of a component) can allow a performance improvement. Changes that provide larger porting or stronger bearing arrangements will give performance gain possibilities and would not normally be acceptable.

3. *Is the substitute component similar in appearance and design to the original?*

   Some minor variations would be acceptable (eg, casting numbers).

4. *Is the substitute manufactured from similar materials to the original component?*

   An alloy head replacing a cast iron head would not be acceptable.

(ii) Approved Substitutions

1. Lancia Delta Integrale HF 16V (1989) – the original Garrett T30 turbo may be replaced with a Garrett T28 turbo with Garrett T30 compressor housing and 2.5 inch exhaust engine pipe.

© Confederation of Australian Motor Sport Ltd. All use subject to Conditions of Use at *www.camsmanual.com.au*

These regulations are based on the principle that modifications to the automobile or its components other than those specified below are forbidden.

Specific Requirements

GROUP MI

MODIFICATIONS

The limits of the modifications allowed are specified hereinafter. Apart from these, any part worn through use or damage can only be replaced by an original part identical to the damaged one, and then only in accordance with the definition of reconditioning.

The automobiles must be strictly series production models and, where applicable, identifiable by the FIA homologation form data (inclusive of Group N Variant Options) or the manufacturers published specifications.

1. ENGINE

1.1 **Exhaust:** All components must be as per the original dimensions and design save that the catalytic converter may be replaced by a substitute part approved by the appropriate transport authority and the muffler may be replaced by one respecting the original equipment inlet and outlet dimensions.

1.1.1 The exhaust system must respect the laws of the state in which the event is run with regard to noise levels and regulations of CAMS.

1.1.2 Minimum bodywork modifications are permitted to allow the exhaust to be routed to avoid modifications to the floor pan which may be necessary to fit approved seats.

1.1.3 Additional parts for the mounting of the exhaust are authorised.

1.1.4 Repair of the exhaust system to original specification is permitted.

1.2 Replacement air filter cartridges are free subject to them being able to fit the original housing without modification to the housing.

1.3 All Electronic Control Units (ECU) are free.

The wiring loom to the ECU may be modified within the last 100 mm of the plug for the sole purpose of modifying/replacing the ECU. As from 1 January 2007 the wiring loom to the ECU and its terminating plug are to remain unmodified and a patch lead may be used to enable connection to the replacement ECU. Provision must be made to remove any piggyback or new unit and replace it with the original unit without rewiring.

All sensors, fuel injection and ignition system components must otherwise remain as standard. Outputs from the electronic unit must retain their original functions in accordance with the homologation form/ manufacturers specifications.

1.4 Boost levels on turbocharged/supercharged automobiles is unrestricted where changes to boost level can be achieved by means of a permitted modification as outlined in these regulations

2. GEARBOX/TRANSMISSION/FINAL DRIVE

2.1 All components must be as original.

3. CHASSIS/SUB-FRAME/MONOCOQUE

3.1 The chassis, sub-frames and any monocoque structure must be standard except for any necessary modifications to the immediate area to permit the fitment of a replacement seat or specified safety equipment. No part of the modified bodywork may extend any lower than the surrounding bodywork.

4. SUSPENSION

4.1 Springs may be replaced by others of the same type, eg, one coil spring may replace another. Springs and spring seats are free.

For MacPherson strut suspensions it is permitted to add or incorporate a threaded sleeve to the exterior of the strut for the purpose of allowing adjustment of the height of the spring seat.

4.2 Dampers are free except that strut housing diameter must remain standard and provided the original mounting including bush material is retained. Remote canisters are not permitted unless fitted as standard.

5. STEERING

5.1 Reversal of the driving side is permitted, on the condition that the modified automobile utilises parts foreseen by the manufacturer for such conversion for the model in question or conversions retain the original steering type (rack and pinion etc), must retain the original steering configuration and is accompanied by an engineers certificate signed by an accredited engineer accepted by an Australian road authority.

6. BRAKES

6.1 The complete braking system is free. Cooling ducts may be added, but these must be visually acceptable and not require modification of the coachwork.

6.2 Modifications to allow fitment of pedal boxes and dual master cylinders are permitted.

7. BODYWORK

7.1 Must remain original.

© Confederation of Australian Motor Sport Ltd. All use subject to Conditions of Use at *www.camsmanual.com.au*

8. INTERIOR

8.1 Save for modifications required to comply with safety requirements and the addition of navigation instruments may be fitted the interior must remain unchanged (including floor carpets).

8.2 The material from which additional interior brackets, switch panels and other similar fitments are made is free, including the use of carbon fibre or Kevlar.

8.3 The rear seat in all automobiles may be removed only if to permit the fitment of rollover protection.

8.4 The luggage compartment cover in hatchback design automobiles may be removed.

8.5 The seats occupied by the crew may be replaced with seats complying with these regulations.

9. ELECTRICAL

9.1 The wiring and electrical connectors, switches, fuses and circuit breakers, starting, ignition and generating systems are free. A panel incorporating additional/replacement switches and/or circuit breakers may be added. The battery may be replaced by another of free type but the location must remain as original.

10. WHEELS AND TYRES

10.1 After market wheels may replace original wheels save that original dimensions shall be retained.

10.2 Hubcaps must be removed.

10.3 Subject to compliance with general tyre requirements, the brand of tyre is free, with equivalent or higher load rating and minimum 40% aspect ratio (unless the original was lower, in which case that may be used).

Fitments must be in accordance with the manufacturer's recommendations.

11. MINIMUM WEIGHT

11.1 Refer Article 7.13 of General Requirements.

GROUP M2

MODIFICATIONS

The limits of the modifications allowed are specified hereinafter. Apart from these, any part worn through use or damage can only be replaced by an original part identical to the damaged one, and then only in accordance with the definition of reconditioning.

The automobiles must be strictly series production models identifiable by the FIA homologation form data (inclusive of Group N Variant Options) or the manufacturers published specifications.

1.1 Accelerator cable may be replaced or doubled by another. Drive by wire throttle systems may be replaced by a cable operated system.

1.2 **Ignition:** The make and type of spark plugs and high-tension leads are free.

1.3 **Induction:**

(i) **Carburettors:** For automobiles fitted with carburettors, components of the carburettor that control the quantity of petrol entering the combustion chamber may be modified, provided that they do not have any influence over the quantity of air admitted. The fuel pump and fuel pressure regulator is free.

Replacement air filter cartridges are free subject to them being able to fit the original housing without modification to the housing.

(ii) **Injection:** For automobiles fitted with fuel injection.

For naturally-aspirated automobiles, fuel injectors and fuel pressure regulators are free. Replacement air filter cartridges are free subject to them being able to fit the original housing without modification to the housing.

(iii) **Engine management:** All electronic control units are free.

For all automobiles, sensors and actuators on the input side must be standard, as must their function. The rev-limiter is free and a device having only this function may be added.

The wiring loom to the electronic control unit may be modified within the last 100 mm of the plug for the sole purpose of modifying/replacing the ECU. As from 1 January 2007 the wiring loom to the ECU and its terminating plug are to remain unmodified and a patch lead may be used to enable connection to the replacement ECU. Provision must be made to remove any piggyback or new unit and replace it with the original unit without rewiring.

Outputs from the electronic unit must retain their original functions in accordance with the homologation form/manufacturers specifications.

1.4 The pipes between the supercharging device and the intercooler and the manifold are free, but their only function must be to channel air.

1.5 **Lubrication:** The fitting of baffles in the removable section of the oil sump is authorised. The oil filter element/cartridge/s is free, providing the element/cartridge fits without modification and does not perform any function other than filtering the oil.

1.6 **Cooling system:** The thermostat is free as is the control system and the temperature at which the fan starts to operate. Locking system for the radiator cap is free.

© Confederation of Australian Motor Sport Ltd. All use subject to Conditions of Use at *www.camsmanual.com.au*

1.7 Engine mounts: The material of the elastic part of the engine mountings is free.

1.8 Exhaust:

1.8.1 For automobiles sold in Australia prior to 1 June 1986, and for other automobiles not originally fitted with a catalytic converter:

The original exhaust may be replaced from the point of exit from the first muffler. The original first muffler must be retained, or alternatively replaced by a muffler as described in Definitions. The external diameter of the exit pipe at its point of exit from the first muffler and all other downstream pipes must not be more than six (6) percent larger than the original first muffler exit pipe external diameter. If the original exhaust had two outlets from the first muffler and these are replaced by a single outlet the cross sectional area of the outlet pipe must not exceed the cross sectional area of the original two pipes at the point of exit from the first muffler

Only one pipe may be present at the exhaust exit, unless there were more present originally. The exit must be situated in the same position as that of the series production exhaust system and notwithstanding the foregoing diameter restrictions, the original outlet pipe/s may be used.

1.8.2 For Australian-made/delivered automobiles built after 1 June 1986 and other automobiles originally fitted with a catalytic converter:

The original catalytic converter may be replaced by a substitute part of original dimensions approved by the appropriate transport authority, but it must be located in the original position.

The original exhaust may be replaced from the point of exit from the catalytic converter. The external diameter of the exit pipe at the point of exit from the catalytic converter and all other downstream pipes must not be more than six (6) percent larger than the original exit pipe external diameter. If the original exhaust had two outlets from the catalytic converter and these are combined in to a single outlet the cross sectional area of the outlet pipe must not exceed the original cross sectional area of the original two pipes.

Only one pipe may be present at the exhaust exit, unless there were more present originally. The exit must be situated in the same position as that of the series production exhaust system and notwithstanding the foregoing diameter restrictions the original outlet pipe/s may be used.

1.8.3 In the case of a close coupled catalytic converter integrated with, or bolted directly to the exhaust manifold, a catalytic converter must be retained. The original exhaust may be replaced from the point of exit from the catalytic converter provided the external diameter of the outlet pipe at the point of exit from the catalytic converter and all other downstream pipes is not more than six (6) percent larger than that of the original outlet pipe.

1.8.4 The modified exhaust system must respect the laws of the state in which the event is run with regard to noise levels, exhaust emissions and regulations of CAMS.

1.8.5 Minimum bodywork modifications are permitted to allow the exhaust to be routed to avoid modifications to the floor pan which may be necessary to fit approved seats.

1.8.6 Additional parts for the mounting of the exhaust are authorised.

1.9 Cylinder head gasket: The material is free, but the thickness must remain standard.

1.10 Cruising speed controller: This controller may be disconnected.

1.11 Boost levels on turbocharged/supercharged automobiles is unrestricted where changes to boost level can be achieved by means of a permitted modification as outlined in these regulations

2. GEARBOX / TRANSMISSION / FINAL DRIVE

2.1 Clutch: the transmission disc is free; however, the original number and diameter of the disc/s must be retained.

2.2 Full floating hubs on live rear axles, fitted by minimum modification to housings are permitted and encouraged.

2.3 For **two-wheel drive** automobiles only, the final drive ratio is free.

3. CHASSIS / SUB-FRAME / MONOCOQUE

3.1 The chassis, sub-frames and any monocoque structure may be prepared to FIA Group N specification (refer: *http://www.fia.com/resources/documents/1208076023_AppJ_2004_Art_254.pdf)* and must be otherwise standard except for any modifications to the body shell in the immediate area which may be necessary to permit the fitment of a replacement seat or specified safety equipment. No part of the modified bodywork may extend any lower than the surrounding bodywork.

4. SUSPENSION

4.1 Spring seats: The spring seats may be made adjustable.

For MacPherson strut suspensions, the shape and material of the spring seats is free. It is permitted to add or incorporate a threaded sleeve to the exterior of the strut for the purpose of allowing adjustment of the height of the spring seat.

4.2 Coil and leaf springs: Provided the type and number is the original, springs are free.

4.3 Torsion bars: The diameter and their mounting spline is free.

4.4 Dampers: Dampers are free, provided that their number, their type (eg, telescopic), their working principle (eg, hydraulic, mixed etc.), and their attachment points remain unchanged. The damper tanks may be separate and may be attached to the shell of the automobile, providing this does not entail modification, other than the drilling of the minimum number of holes for mounting. Notwithstanding, for MacPherson strut suspensions

© Confederation of Australian Motor Sport Ltd. All use subject to Conditions of Use at *www.camsmanual.com.au*

which are integral with the stub axle/steering arms, then the original outer housing must be retained. The damping mechanism is free.

An elastomeric bush mounting the damper may be replaced by a "uniball" joint, but only on the condition that the damper has no guiding function (for example as in a MacPherson strut).

4.5 The reinforcing of the suspension and its anchorage points by the addition of material is allowed, provided it follows the original shape and is in contact with it.

4.6 Anti-roll bars and attachments are free; save that they may not be adjustable from the crew compartment. Automobiles fitted with existing cockpit adjustable sway bars shall have either the adjustment system sealed or the actuating rods removed.

4.7 In the case of oil-pneumatic suspensions, the spheres may be changed in regard to their dimensions, shape and material, but not the number. A tap, adjustable from outside the automobile, may be fitted to the spheres.

5. STEERING

5.1 Reversal of the driving side is permitted, on the condition that the modified automobile utilises parts foreseen by the manufacturer for such conversion for the model in question or conversions, must retain the original steering type (rack and pinion etc), steering ratio, and the original steering configuration and be accompanied by an engineers certificate signed by an accredited engineer accepted by an Australian road authority.

6. BRAKING SYSTEM

6.1 The complete braking system is free. Cooling ducts may be added, but these must be visually acceptable and not require modification of the coachwork.

6.2 Modifications to allow fitment of brake pedal boxes and dual master cylinders are permitted.

7. BODYWORK

7.1 The fitting of under body protections is authorised, provided that these are removable and which are designed exclusively and specifically in order to protect the following parts: engine, radiator, suspension, gearbox, fuel tank, transmission, exhaust, extinguisher bottle.

8. INTERIOR

8.1 (i) All accessories which have no effect on the automobile's behaviour are allowed without restriction such as those concerning the aesthetics or interior comfort (lighting, heating, radio etc.), on the express condition that they do not influence, even in a secondary manner, the efficiency of the engine, steering, strength, transmission, braking, or road holding.

(ii) The driver and navigators seat/s may be replaced by others complying with requirements outlined elsewhere in these regulations.

(iii) The carpet and roof lining may be removed. Trim may be removed from the boot/luggage space/spare wheel area. Trim shall be retained in the case of hatchbacks, though the carpet and hatch cover may be removed.

(iv) All the controls must be those provided by the manufacturer and they must retain their original function but they can be worked on to make them more accessible or more easily useable, for example, the addition of an extension to the handbrake lever, an additional flange to the brake pedal etc.

The following is authorised:

(a) Additional measuring instruments, counters etc. may be freely installed provided that their fitting is not likely to create any danger.

(b) The horn may be changed. An additional one, possibly for the passenger's use may be added.

(c) The mechanism of the hand brake lever may be adapted in order to obtain instant unlocking (ie, fly-off handbrake) A mechanically operated hand brake must be retained. A hydraulic hand brake can be added.

(d) Additional compartments may be added to the glove compartment as well as additional pockets to the doors.

(e) The rear seat may be removed for the fitment of rollover protection and/or spare wheels.

(v) **Doors - side trim:**

(a) It is permitted to remove the soundproofing material from the doors, provided that this does not modify the shape of the doors.

It is permitted to remove the trim from the doors and replace this with a panel made from some form of rigid material other than carbon fibre or Kevlar (eg, aluminium, fibreglass, Masonite), covered in fabric.

Alternatively it is permitted to remove the trim from the doors together with their side protection bars in order to install a side protection panel which is made from composite materials. The minimum configuration of this panel must comply with that shown on drawing 255-14.

(b) If the original structure of the doors has not been modified (removal, even partially, of the tubes or reinforcements), the door panels may be made from metal sheeting at least 0.5mm thick, from carbon fibre at least 1mm thick or from another solid and non-combustible material at least 2mm thick.

The rules mentioned above also apply to the trim situated beneath the rear side windows of two-door automobiles.

The minimum height of the door's side protection panel must extend from the base of the door to the maximum height of the door strut.

© Confederation of Australian Motor Sport Ltd. All use subject to Conditions of Use at *www.camsmanual.com.au*

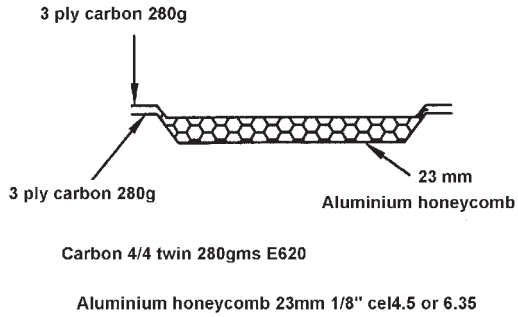

Drawing 255-14

8.2 The material from which additional interior brackets, switch panels and other similar fitments are made is free, including the use of carbon fibre or Kevlar.

8.3 Seat and/or harness mounts may be reinforced.

9. ELECTRICAL SYSTEM

9.1 The wiring and electrical systems are free. A panel incorporating additional/replacement switches and/or circuit breakers may be added. The battery may be replaced by one of free type and may be relocated provided that it is located within an appropriate battery box and securely mounted.

10. WHEELS AND TYRES

10.1 The wheels are free, save that they must be of the standard diameter and width and offset and comply with Schedule E (refer "General Requirements for Cars and Drivers").

10.2 Tyres shall comply with the requirements outlined elsewhere in these regulations.

10.3 Wheels and tyres must be covered by the bodywork.

10.4 The spare wheel may be brought inside the driving compartment, on condition that it is firmly secured there by a means which will retain the tyre in the event of a 25G impact and that it is not installed in the space reserved for the driver and the front seat passenger.

10.5 Air extractors added on the wheels are forbidden.

10.6 Hubcaps must be removed.

11. MINIMUM WEIGHT

11.1 Refer Article 7.13 of General Requirements.

12. FUEL CIRCUIT

12.1 The filler holes may not be located in the windows or window panels.

12.2 Replacement or additional fuel lines must be changed for aviation type lines if an FT3 tank is used, the route of these lines being free. Should a series production tank be used, the use of such lines is optional.

12.3 The total capacity of replacement tanks must not exceed the following limits, in relation to the resultant engine capacity:

Up to 700 cm^3	60L
From 700 cm^3 to 1,000 cm^3	70L
From1,000 cm^3 to 1,300 cm^3	80L
From1,300 cm^3 to 1,600 cm^3	90L
From1,600 cm^3 to 2,000 cm^3	100L
From2,000 cm^3 to 2,600 cm^3	110L
From 2,600 cm^3	120L

For automobiles homologated from 1 January 1998, with a fuel tank installed in the luggage compartment, a fireproof and liquid-proof case must surround the fuel tank and its filler holes.

© Confederation of Australian Motor Sport Ltd. All use subject to Conditions of Use at *www.camsmanual.com.au*

GROUP M3

1. ENGINE

1.1 Accelerator cable may be replaced or doubled by another. Drive by wire throttle system may be replaced by a cable operated system.

1.2 **Ignition:** The make and type of spark plugs and high-tension leads are free. The distributor is free, subject to fitting the standard location.

1.3 **Cooling system:** The radiator is free, subject to not requiring modifications to the bodywork to fit. The thermostat is free as is the control system and the temperature at which the fan cuts in. The water pump is free.

1.4 **Induction:**

(i) **Carburettors:** For automobiles fitted with carburettors, the intake manifold is free, and the carburettor/s may be replaced and/or modified providing the number of venturis does not exceed one per cylinder. The air filters and housing are free. The fuel pump and fuel pressure regulator is free.

(ii) **Injection:** For **naturally-aspirated** automobiles fitted with fuel injection, a maximum of one throttle opening per cylinder (eg, butterflies) is permitted, the size of which is free. The inlet manifold, fuel injectors, fuel pressure regulators, air filters and housings are free.

For **turbo/supercharged** automobiles, the injection system other than the ECU, fuel injectors, fuel pump and fuel pressure regulator (which are free), must remain standard. Replacement air filter cartridges are free subject to them being able to fit the original housing without modification to the housing.

The pipes between the supercharging device and the intercooler and the manifold are free, but their only function must be to channel air.

1.5 **Engine management:** The electronic control unit is free.

For all automobiles, sensors and actuators on the input side must be standard, as must their function. The rev-limiter is free and a device having only this function may be added.

1.6 The lubrication system is free. Oil tanks may not be located in the cockpit. There may be no joins in oil lines in the cockpit.

1.7 **Engine mounts:** The material of the elastic part of the engine mountings is free. The number of the engine mountings must remain standard.

1.8 **Exhaust:**

(i) For naturally-aspirated and mechanically-supercharged automobiles the exhaust is free from the cylinder head, save that it must incorporate a muffler, and exit in the original location. For automobiles originally fitted with a catalytic converter, a catalytic converter must be retained.

(ii) For turbocharged automobiles, the exhaust system is free from the point of exit of the turbo, save that it must incorporate a muffler, and exit in the original location. For automobiles originally fitted with a catalytic converter a catalytic converter shall be retained.

1.9 **Cylinder head gasket:** The material is free, but the thickness must remain standard.

1.10 **Cruising/maximum speed controller:** This controller may be disconnected.

1.11 **Supercharger or turbocharger:** Hoses in the turbo system, the purpose of which is to carry air, are free. Boost pressure is free. The turbo system must remain otherwise original.

1.12 **Pulleys:** Ancillary pulleys and drive belts are free.

Other Modifications Permitted on M3 Naturally Aspirated (NA) Models only:

1.13 Valve train components, including camshaft/s, are free provided the number of valves and their method of actuation (ie, OHV, OHC, DOHC) is retained.

1.14 **Engine internals:**

- Additional mechanical treatments, different from those carried out on the series production part, are allowed to be made to the crankshaft and connecting rods. Eg, shot peening, chemical/heat treatment
- Pistons are free
- 1mm overbore is permitted

1.15 **Cylinder head:** Cylinder head inlet and exhaust ports may be modified only by the removal of metal.

1.16 **Flywheel:** free.

Rotary Automobiles:

1.17 Modifications to rotary engines rotors, housings and end plates may be effected only by the removal of metal. Rotary engines may be modified by the utilisation of the porting technique/s other than "Peripheral" porting.

2. GEARBOX/TRANSMISSION/FINAL DRIVE

2.1 The clutch is free.

2.2 The casings and housings must be the same as originally fitted to the automobile.

2.3 The number of forward gears must be standard; otherwise the internal components are free.

2.4 The gear change mechanisms must be as originally specified for the automobile, other than that shortened or 'quick' shifters which do not result in modification to the casings or housings are permitted. Sequential shift mechanisms are not permitted.

2.5 The internal components of the differential, axles and drive shafts, are free.

© Confederation of Australian Motor Sport Ltd. All use subject to Conditions of Use at *www.camsmanual.com.au*

2.6 Live rear axle equipped automobiles may be modified to incorporate floating rear hubs.

3. CHASSIS / SUBFRAME / MONOCOQUE

3.1 The chassis, sub-frames and any monocoque structure may be prepared to FIA Group N specification (refer: *http://www.fia.com/resources/documents/1208076023_AppJ_2004_Art_254.pdf)* and must be otherwise standard except for any modifications to the body shell in the immediate area which may be necessary to permit the fitment of a replacement seat or specified safety equipment. No part of the modified bodywork may extend any lower than the surrounding bodywork

4. SUSPENSION

4.1 Strengthening by the addition of metal is permitted, provided it follows the original shape, or contour, and is in contact with it.

4.2 Original suspension mounting points may be altered in design, but not in location.

4.3 Adjustable strut tops are permitted, providing that there is no modification to the bodywork in order to fit them.

4.4 Suspension bushings are free, provided that the design of the bushes is original and be of an elastomeric material. The bush offset of the hole within the bush is free.

4.5 Springs and their mountings, dampers and torsion bars are free.

4.6 Anti-roll bars and attachments are free; save that they may not be adjustable from the crew compartment. Automobiles fitted with existing cockpit adjustable sway bars shall have either the adjustment system sealed or the actuating rods removed.

4.7 The addition of braces for strut/damper towers is permitted, provided they are only connected to each tower, and are not connected at any other point of the chassis or bodywork. Attachment of such a brace must be by bolts. The design of the brace is otherwise free.

5. STEERING

5.1 Reversal of the driving side is permitted, on the condition that the modified automobile utilises parts used are foreseen by the manufacturer for such conversion for the model in question or conversions retain the original steering type (rack and pinion etc), must retain the original steering configuration and is accompanied by an engineers certificate signed by an accredited engineer accepted by an Australian road authority.

5.2 Steering ratio is free.

6. BRAKES

6.1 The complete braking system is free. Cooling ducts may be added, but these must be visually acceptable and not require modification of the coachwork.

6.2 Modifications to allow fitment of brake pedal boxes and dual master cylinders are permitted.

7. COACHWORK, BODYWORK

7.1 The coachwork/bodywork must be original save for 7.2.

7.2 Notwithstanding 7.1 above:

(i) The bodywork and body fittings in its entirety must be as supplied by the manufacturer, including materials, save that:

- Front mudguards, bonnet, nose panel, boot lid or rear hatch of alternative material are permitted, provided they are of the same external shape as the original panel. The following minimum specifications of alternative materials shall be respected: aluminium – 1.25mm thick; glass fibre/glass fibre reinforced plastic – 3mm thick.

(ii) Additional air intakes for oil or brake cooling (apart from those fitted outside the bodywork) may only be fitted using original apertures in the bodywork. It is permitted to remove auxiliary lights or blanking plates and use these apertures for cooling ducts;

(iii) Aerodynamic aids must be as originally fitted to the automobile series in production. Front and rear spoilers may be made from alternative materials but must retain the original shape and dimensions.

8. INTERIOR

8.1 Additional instruments and switches may be fitted.

8.2 The material from which additional interior brackets, switch panels and other similar fitments are made is free, including the use of carbon fibre or Kevlar.

8.3 The rear seat and the luggage compartment cover in hatchback design automobiles may be removed.

8.4 The seats occupied by the crew may be replaced with seats complying with these regulations

8.5 All carpets may be removed.

8.6 Interior roof lining may be removed and or modified.

8.7 Doors - side trim:

(i) It is permitted to remove the soundproofing material from the doors, provided that this does not modify the shape of the doors.

It is permitted to remove the trim from the doors and replace this with a panel made from some form of rigid material other than carbon fibre or Kevlar (eg, aluminium, fibreglass, Masonite), covered in fabric.

Alternatively it is permitted to remove the trim from the doors together with their side protection bars in order to install a side protection panel which is made from composite materials. The minimum configuration of this panel must comply with that shown on drawing 255-14.

© Confederation of Australian Motor Sport Ltd. All use subject to Conditions of Use at *www.camsmanual.com.au*

(ii) If the original structure of the doors has not been modified (removal, even partially, of the tubes or reinforcements), the door panels may be made from metal sheeting at least 0.5mm thick, from carbon fibre at least 1mm thick or from another solid and non-combustible material at least 2mm thick.

The rules mentioned above also apply to the trim situated beneath the rear side windows of two-door automobiles.

The minimum height of the door's side protection panel must extend from the base of the door to the maximum height of the door strut.

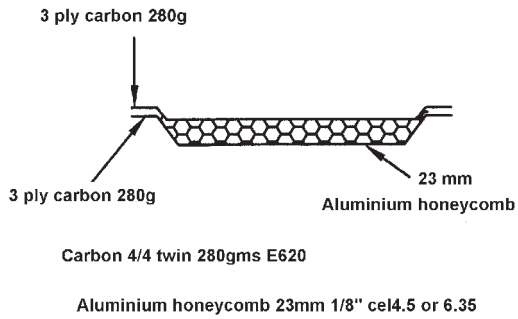

Drawing 255-14

9. ELECTRICAL SYSTEM

9.1 The wiring and electrical systems are free. A panel incorporating additional/replacement switches and/or circuit breakers may be added. The battery may be replaced by one of free type and may be relocated provided that it is located within an appropriate battery box and securely mounted.

10. WHEELS AND TYRES

10.1 Wheels and tyres are free subject to the following:

(i) The diameter and width of the wheels shall be no greater than the following dimensions, unless fitted as original with larger, in which case the standard wheel dimension is able to be utilised:

Up to 2000cc corrected engine capacity	16" diameter x 7" width
2000cc – 4000cc corrected engine capacity	17" diameter x 7" width
Over 4000cc corrected engine capacity	17" diameter x 8" width

(ii) Tyres must be in accordance with the provisions outlined elsewhere in these regulations.

(iii) Wheels and tyres must be covered by the mudguards.

11. MINIMUM WEIGHT

11.1 Refer Article 7.13 of General Requirements.

GROUP M4

Automobiles complying entirely with FIA Group N regulations, CAMS Group N (P) regulations (subject to specific CAMS approval) or CAMS PRC regulations at the discretion of the event organisers.

Where entries are insufficient, at the organisers' discretion, M4 may be combined with other categories in accordance with any conditions outlined in the supplementary regulations by the organisers.

GROUP M5

This category is provided for automobiles that are powered by alternative energies such as electric or other hybrid automobiles as approved by ARCom and/or CAMS and subject to acceptance of entry by event organisers.

© Confederation of Australian Motor Sport Ltd. All use subject to Conditions of Use at *www.camsmanual.com.au*