OFF ROAD VEHICLES

Specific Requirements for Off Road Vehicles

Note: references in the text to "GR" refer to "General Requirements", to be found in "Off Road" in the CAMS Manual of Motor Sport.

SR 1 Buggy Classes

SR 1.1 GENERAL

Buggies are generally automobiles of tube frame construction designed for the purpose of competing in Off Road events. All buggies must comply with GR 2-29, noting in particular the requirements of GR 9 Chassis/Frame and, if required by regulations for a specific event, one or more of GR 30-36.

Where the class rules permit a single seat, the drivers seat may be either centrally located or to the left or right of centre. Any such vehicle may only compete in that configuration if an unused seat and harness is removed.

Buggies will be eligible to be entered in only one buggy class, whether or not they comply with the regulations for more than one class, unless specifically outlined in the relevant sporting or supplementary regulations.

SR 1.2 PRO BUGGY Buggies with engines between 1650cc and not exceeding 6000cc.

ELIGIBILITY/DEFINITION

A one- or two-seat, two-wheel drive automobile, as defined in GR 1.

Engine capacity shall be over 1650cc and not exceeding 6000cc for petrol engines or 7200cc for diesel engines, inclusive of any turbo/supercharging, rotary and/or diesel correction factors.

SR 1.3 PROLITE BUGGY Buggies with engines up to 3500cc, naturally-aspirated.

ELIGIBILITY/DEFINITION

A one or two-seat, two-wheel drive automobile, as defined in GR 1.

Engine capacity shall be up to 3500cc, inclusive of any rotary and/or diesel correction factors. All engines shall be naturally aspirated (ie, no turbo or supercharging device is permitted).

SR 1.4 SUPER 1650 BUGGY Buggies with engines between 1330cc and 1650cc.

ELIGIBILITY/DEFINITION

A two-seat, two-wheel drive automobile, as defined in GR 1.

Engine capacity shall not exceed 1650cc, inclusive of any turbo/supercharging, rotary and/or diesel correction factors.

SR 1.5 SPORTSMAN BUGGY Buggies with engines not exceeding 1330cc.

ELIGIBILITY/DEFINITION

A two-seat, two-wheel drive automobile, as defined in GR 1 fitted with at least two seats and which complies with GR 2-29 and, if required by regulations for a specific event, one or more of GR 30-36.

Engine capacity shall not exceed 1330cc, inclusive of any turbo/supercharging, rotary and/or diesel correction factors.

SR 1.6 CLUBMAN BUGGY Buggies with engines not exceeding 1650cc (State level and below only).

SR 1.6.1 PREAMBLE

These regulations are designed to prescribe a basic low-cost off road car which will allow competitors to participate in events up to and including State Championship level at relatively low cost. It is intended to allow older two-seater and single-seater cars as well as new vehicles to compete in a restricted format. Unless otherwise stated, all modifications are free.

SR 1.6.2 GENERAL

The chassis must be of space frame construction, two-wheel drive. Other than as prescribed herein, the car must comply with SR 1.1.

SR 1.6.3 FRONT AXLE

The complete front axle assembly must be of link-pin type.

© Confederation of Australian Motor Sport Ltd. All use subject to Conditions of Use at *www.camsmanual.com.au*

SR 1.6.4 REAR AXLE/TRANSMISSION

The rear axle assembly (transaxle) must only have four forward gears.

Constant Velocity (CV) and/or universal joints shall be inboard of all rear wheel bearings.

SR 1.6.5 SUSPENSION

1. Front suspension – only two front shock absorbers (one per side) may be used which may carry coilover springs. Shock absorbers with auxiliary canisters or external bypass shock absorbers are NOT permitted.
2. Rear suspension – up to four rear shock absorbers may be fitted (two per side) of which two may carry coilover springs. Shock absorbers with auxiliary canisters or external bypass shock absorbers are NOT permitted.

SR 1.6.6 ENGINE

The engine capacity is not to exceed 1650cc. It must be derived from a series production model and be over 1550cc from manufacturer in standard form. Variable cam/valve timing is not permitted (eg, VTEC, MIVEC).

Induction is free, save for the following:

- Fuel injected engines may only be fitted with a single throttle body and throttle plate/butterfly (eg, quad throttle bodies are not permitted).
- The inlet manifold/plenum volume may not exceed four litres as measured between the gasket face (at the head) and the throttle plate/s for all engines. The inlet manifold is otherwise free.
- A single restrictor plate of at least 3mm thickness complying with drawing C6-1 and C6-2 with an orifice of a maximum of 23mm internal diameter must be fitted between either the carburettor base and inlet manifold or the throttle body and plenum chamber of EFI engines, as applicable. All air for the combustion process must be drawn into the engine through the single restrictor plate. The shape of any attachment on either side of the restrictor plate ("lead in" or "lead out") is free.

  Provision must be made for the application of seals which must be affixed by a CAMS-licensed scrutineer, who shall confirm the specification of the restrictor plate. Any such seal must prevent the removal of the restrictor plate and shall remain in place throughout the competition, and may not be removed without the approval of the Chief Scrutineer.

  All other engine modifications are free.

Drawing C6-1

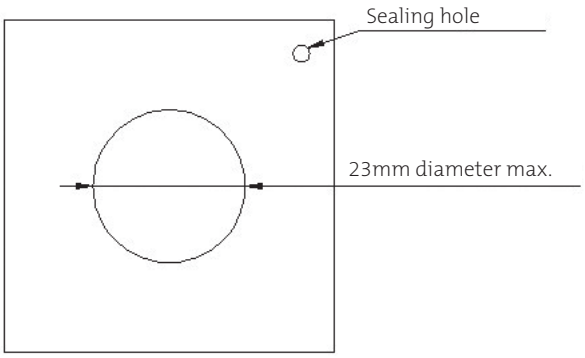

Drawing C6-2

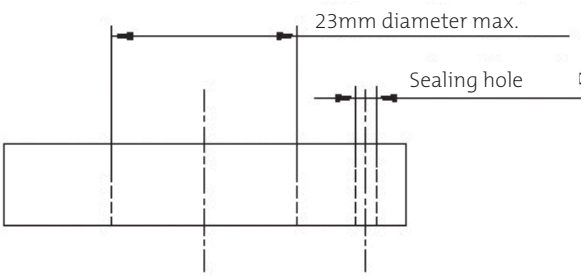

© Confederation of Australian Motor Sport Ltd. All use subject to Conditions of Use at *www.camsmanual.com.au*

SR 2 Two-Wheel Drive (2WD)

2WD cars will be eligible to be entered in only one 2WD class, whether or not they comply with the regulations for more than one class, unless specifically outlined in the relevant sporting or supplementary regulations.

SR 2.1 PERFORMANCE 2WD

Modified 2WD with engine not exceeding 6000cc for petrol engines or 7200cc for diesel engines.

SR 2.1.1 ELIGIBILITY/DEFINITION

A two-wheel drive automobile as defined in GR 1 with provision for at least two crew members which is derived from a Series Production type being either:

(i) an automobile recognised by the FIA in Group A or B, and/or recognised by CAMS; or

(ii) a commercially-manufactured utility-type truck, pick-up or station wagon up to 1.5 tonnes rated load capacity, recognised by CAMS and which complies with GR 2-23 and 25-29 and, if required for a specific event, one or more of GR 31-36.

Note: Special attention should be paid to GR 9 (chassis), GR 12 (head restraints), GR 16 (collapsible steering columns) and GR 18 (roll over protection).

All modifications are allowed except for those prohibited in the following regulations.

SR 2.1.2 COACHWORK

(i) The original silhouette of the coachwork of the vehicle, when viewed from the side, must be retained and may not be changed from the vehicle from which it is derived, except as specifically permitted below:

- (a) the bodyshell (see Definitions, "General Requirements for Cars and Drivers" in the CAMS Manual of Motor Sport) must be unchanged in material;
- (b) bumper bars and external decoration may be removed. The body must present a neat and professional appearance;
- (c) coachwork beneath the bumper bar mountings may be removed between those mountings and the centre of the corresponding wheel;
- (d) a bull bar/brushguard not exceeding the width (at the front) of the bodywork may be fitted;
- (e) front and rear stone trays may be removed;
- (f) the radiator grille must remain unchanged in shape and must remain in its original location;
- (g) the fitting of equipment and/or ancillary mechanical components in the cargo compartments of utility/pickup-type vehicles is permitted, provided that this does not alter the silhouette outside the area bounded by the rear of the cabin, the top of the side panels of the rear cargo area, and a straight line drawn from the top of the tailgate to the rear of the roof;
- (h) the maximum permitted variation of the wheelbase from the manufacturer's specification is plus or minus 3%;
- (i) external non-stressed panels, eg, mudguards, bonnet, bootlid and tailgates may be replaced by panels of free construction. The tailgate may be removed. It is permitted to remove material from the engine cover to facilitate the fitment of larger air cleaners, provided always that the shape of the panel is clearly identifiable. This freedom does not allow the addition of any material to the panel;
- (j) two independent methods of retaining the bonnet are required eg, bonnet pins or straps, together with the original fixing;
- (k) all interior trim, including the dashboard, is free.
- (l) roof vents may be fitted, but they must be in the forward one-third of the roof, with their opens side facing forward, and their vertical opening not greater than 10cm.

(ii) Complete wheels (see Definitions, "General Requirements for Cars and Drivers") must be covered by mudguards, or flares firmly attached to the mudguard, for at least one third of the circumference of the wheel (over the full width of the assembly).

(iii) Windscreens may be either removed, or replaced with one of the following:

- (a) aero type windscreen of perspex, Lexan, polycarbonate etc;
- (b) shatterproof, zone toughened, or laminated glass screen.

(iv) The front doors are required to comply with the following:

- (a) the original front door frames are required to be retained, except that the portion of the door above the lower level of the window aperture may be removed;
- (b) the door frame is required to be unchanged in the areas not covered by the original door trim;
- (c) the removal of all window regulator mechanisms is permitted;
- (d) the original front door hinges and catches are required to be retained;
- (e) any internal anti-theft locks are required to be rendered inoperative;
- (f) the door trim, if removed, is required to be replaced by flush-fitting rigid material, and
- (g) if the door is modified from the original, other than as provided for in sub-regulation (f) above, door bars are required to be incorporated into the roll over protection. (See article 3.2.5.2 of Schedule J – "General Requirements for Cars and Drivers".)

(v) The use of chassis/cab vehicles without rear bodywork, and of tray-top vehicles, is prohibited on the grounds of safety.

© Confederation of Australian Motor Sport Ltd. All use subject to Conditions of Use at *www.camsmanual.com.au*

SR 2.1.3 CHASSIS

(i) The original chassis and/or monocoque, including any sub-frames, must be retained in its original location; and must remain unchanged in dimensions, plan view and silhouette.
(ii) Engine and transmission mounts and cross-members may be removed, relocated or refurbished.
(iii) Any brackets and mounts rendered surplus by authorised modifications may be removed.
(iv) It is permissible to remove the minimum amount of material necessary to allow the fitment of approved wheels, tyres and suspension components.
(v) Material may be added for any purpose.

SR 2.1.4 ROLL OVER PROTECTION

A roll cage, of at least of Type 3 as outlined in Schedule J ("General Requirements for Cars and Drivers"), must be fitted to all vehicles save that in the case of vehicles registered for use on the road, and which are fitted with a steel roof of factory origin, the diagonal brace may be omitted.

Fibreglass- or plastic-bodied vehicles must incorporate roof plates as specified at GR 13 (Open Cars).

SR 2.1.5 ENGINE/TRANSMISSION

The type and location of engine is free provided that it is located in the same general area as envisaged by the manufacturer of the body, subject to it being of not more than 6000cc capacity for petrol engines or 7200cc for diesel engines.

Engines mounted in front or rear may intrude into the space originally intended for passengers, save that no part of the cylinder block may extend across a line drawn at right angles to the longitudinal axis of the car, at a point halfway between the front and rear wheel hub centres.

The original engine/gearbox/final drive configuration, in relation to the body, must be retained.

Drive train components are free.

Engine covers inside the car must be of the same material as the firewall, and may be attached to the firewall by any method deemed safe by the event chief scrutineer.

Drive shafts must be contained in such a way that they cannot enter the cabin area in case of breakage.

SR 2.1.6 ELECTRICAL

In addition to GR 24, 25 and 26, tail lamps and stop lamps must be fitted and operational, and must be as near to original as possible. A dust lamp must be fitted.

The original headlamp position/s must be retained and the lamps must be operable.

SR 2.1.7 FUEL TANK

Additional or replacement fuel tanks of free and safe design may be fitted and must be vented to the outside of the vehicle.

If the design of the vehicle makes the fitment of a fuel tank outside the habitacle impracticable eg, Ford Laser, Mazda RX-7, it is permitted to fit the tank in that compartment provided the filling orifice and breather are outside that compartment, regardless of vehicle construction.

The fuel tank must be separated from the occupants by a separate fire and liquid proof bulkhead.

SR 2.1.8 BRAKING SYSTEM

Brakes and braking systems are free save that all vehicles must be fitted with a dual circuit braking system arranged so that in the event of a leakage at any point in the system, the pedal shall still control two wheels on the same axle.

SR 2.2 EXTREME 2WD

Highly-modified 2WD with engine not exceeding 6000cc for petrol engines or 7200cc for diesel engines. Includes Baja.

SR 2..2.1 ELIGIBILITY/DEFINITION

A two-wheel drive automobile, as defined in GR 1, and which may be fitted with either one or two seats. The front and rear of the body must substantially resemble that of the production vehicle from which it is derived, or that of a VW Baja, the body of which must be a Type One Volkswagen hardtop sedan which may be modified as specified hereunder. Vehicles must comply with GR 2-29 and, if required by regulations for a specific event, GR 30-36.

The use of chassis/cab vehicles without rear bodywork, and of tray-top vehicles, is prohibited on the grounds of safety.

All modifications are allowed, save for the restrictions specified hereunder.

SR 2.2.2 COACHWORK/CHASSIS

The body must be derived from a production automobile and substantially resemble it.

The height, width and length may not be reduced from that of the bodyshell from which the vehicle is derived.

Baja

(i) Bodywork forward of the front axle and rearward of the engine bonnet hinges may be removed and/or altered in design and/or material.
(ii) Mudguards front and rear must not be less than 840mm in length, and 200mm in width at the widest points.

The chassis is free.

© Confederation of Australian Motor Sport Ltd. All use subject to Conditions of Use at *www.camsmanual.com.au*

SR 2.2.3 ROLL OVER PROTECTION

A roll cage of at least Type 3, as specified in Schedule J (see "General Requirements for Cars and Drivers"), must be fitted or alternatively must incorporate a frame which complies with GR 9.

SR 2.2.4 ENGINE

The engine is free, subject to it being of not more than 6000cc capacity for petrol engines or 7200cc for diesel engines inclusive of any turbo/supercharging, rotary and/or diesel correction factors.

Modifications to the engine are free.

The location of the engine is free, save that no part of the cylinder block may extend across a line drawn at right angles to the longitudinal axis of the car, at a point halfway between the front and rear wheel hub centres.

SR 2.2.5 TRANSMISSION

The gearbox, housing, differentials and axle housings are free.

SR 2.2.6 ELECTRICAL

The requirements of GR 24-26 must be complied with.

SR 3 Four-Wheel Drive (4WD)

SR 3.1 PRODUCTION 4WD

Production 4WD with engine not exceeding 6000cc for petrol engines or 7200cc for diesel engines.

SR 3.1.1 PREAMBLE

All modifications are forbidden unless expressly authorised by these Specific Regulations (SR) and where appropriate, the General Regulations (GR).

Where a regulation is marked (H) the onus is on the competitor to provide supporting information from the relevant brochure or official documents issued by the vehicle manufacturer/importer/distributor.

SR 3.1.2 ELIGIBILITY/DEFINITION

A four-wheel drive automobile as defined in GR 1, of a series production type of which not fewer than 25 identical units (with regard to engine/chassis) have been marketed in Australia, or recognised by FIA and which complies with GR 2-8, 11-21, 25-29 and, if required by regulations for a specific event, GR 30-36.

SR 3.1.3 COACHWORK

Coachwork beneath the bumper bar mounts may be removed or modified.

Bumper bars may be replaced with a bull bar/brushguard.

Detachable hardtops and/or tailgates may be removed or replaced.

The addition of separate flares or wheel arch extensions to the original mudguards is permitted.

Vehicles first registered for competition in Class 7 prior to 1 January, 1987 and which have been modified in the area of the wheel arches may be submitted to CAMS for dispensation.

All additional accessories inside the habitacle are authorised without restriction, such as those concerning the aesthetics or the inside comfort, eg lighting, heater, radio etc, as well as those enabling easier or safer driving of the car, eg, screen washers, mirrors etc, provided that they do not affect, even indirectly, the mechanical performance of the engine, steering, transmission, road holding or braking.

Roof vents may be fitted, but they must be in the forward one-third of the roof, with their opens side facing forward, and their vertical opening not greater than 10cm.

The use of chassis/cab vehicles without rear bodywork, and of tray-top vehicles, is prohibited on the grounds of safety.

SR 3.1.4 INTERIOR

Interior trim, seats and floor coverings are free. The front door trim, if removed, is required to be replaced by flush-fitting rigid material. Insulating material may be removed from the floor. Instruments may be added. The steering wheel is free.

SR 3.1.5 CHASSIS

The original chassis must be retained unmodified, save that material for strengthening purposes may be added, as may be material to enable the addition of dampers (see SR 7.8).

SR 3.1.6 ENGINE

The original engine block may not be changed. The cylinder bore may be increased so as to accommodate up to the largest oversize piston nominated by the manufacturer (H) as being available for the model. Planing of the cylinder block is allowed.

Pistons, piston rings, gudgeon pins and their securing mechanisms are free. The original crankshaft and connecting rods must be retained. They may be modified only by the removal of metal or by chemical or heat treatment. Engine capacity is limited to 6000cc capacity for petrol engines or 7200cc for diesel engines, inclusive of any turbo/supercharging, rotary and/or diesel correction factors.

The original flywheel may be modified only by the removal of metal or by chemical or heat treatment.

Sump, filter and oil radiators are free as are oil lines.

Save for the retention of the original number, the carburettor is free. An adaptor plate may be attached to the inlet manifold to facilitate the fitment of the carburettor. Carburettor linkages are free.

© Confederation of Australian Motor Sport Ltd. All use subject to Conditions of Use at *www.camsmanual.com.au*

The air filter and associated fittings leading to the carburettor are free. On vehicles originally fitted with fuel injection systems:

(a) the air filter and associated fittings leading to the inlet manifold are free;
(b) the electronic or mechanical equipment involved in the management, monitoring or calibration of the injection system is free;
(c) the throttle control assembly, if an integral part of the inlet manifold, must be as supplied by the manufacturer; otherwise it is free;
(d) the inlet manifold and throttle butterfly, if integrated, may be modified only by removal of material from within the inlet tract; and
(e) fuel injectors and their method of attachment are free, save that no modification may be made to the inlet manifold to facilitate their fitment. Inlet manifolds may be modified only by the removal of material from the inlet tract.

The exhaust system is free.

Valves are free, but not their number.

Valve springs, retainers, cotters and guides are free.

Camshafts are free, but not their number, location or the number of bearings.

Engine mounts are free, but not their location or number.

Fuel pumps are free, but they may not be located in the passenger compartment unless originally sited there.

Fuel lines and fuel filters are free.

Anti-pollution equipment may be removed and any resultant holes plugged.

Fans are free.

Radiators and their fixation are free, providing the original fittings on the vehicle are maintained.

Ancillary belts and pulleys situated outside the engine are free.

The thermostat is free.

If a vehicle is originally fitted with a turbocharger or a supercharger, the induction pressure is free, as are the control devices. Only the original intercooler is permitted, and it may not be modified in any way.

SR 3.1.7 GEARBOX

The original gearbox housing and configuration must be maintained.

(H) Ratios must be as available from the manufacturer for the vehicle.

Gearbox mounts are free as is their number.

An oil radiator and ancillary components including pump may be added.

The clutch lining material is free as is the method of attachment.

SR 3.1.8 FINAL DRIVE

Differentials and transfer case must be operative and capable of driving all four wheels.

Differential action is free.

(H) Ratios must be as available from the manufacturer.

SR 3.1.9 SUSPENSION

Shock absorbers are free subject to the following:

(a) one additional shock absorber per wheel may be added. Mountings for such additions may be attached to the chassis or bodywork. The minimum amount of material may be removed as is necessary for the fitment of these;
(b) the original shock absorber may be modified or replaced by another and its associated mounting may be moved or modified only to the extent necessary to permit the fitment of any additional shock absorber;
(c) no part of any shock absorber or its associated mounting may protrude through any external body panel (front shock absorbers) or any body panel (rear shock absorbers);
(d) suspension and spring mounting points, and all suspension components, may be strengthened by the addition of material;
(e) spring hangers and shackles may not be reversed or lengthened. Springs are free subject to their retaining the original type of spring, eg, coil, torsion bar, leaf.

SR 3.1.10 FUEL TANK

Fuel tanks and their capacities are free, as is their location. Should a fuel tank be located in the habitacle, it must be separated from the occupants by a flame and liquid proof bulkhead.

SR 3.1.11 WHEELS

Wheels are free subject to a maximum rim width of 8".

SR 3.1.12 BRAKES

The original braking system must be retained in its entirety, and shall be unmodified save for the composition of the brake pads/linings and/or the addition of power assistance.

If, as original equipment, the vehicle is fitted with a dual-circuit braking system, the handbrake may be removed.

© Confederation of Australian Motor Sport Ltd. All use subject to Conditions of Use at *www.camsmanual.com.au*

SR 3.1.13 ROLL OVER PROTECTION

A roll cage, of at least Type 3, as specified in Schedule J (refer "General Requirements for Cars and Drivers"), must be fitted.

SR 3.1.14 GENERAL

Throughout the vehicle nuts, bolts and screws may be replaced by any other nut and/or bolt and/or screw. All gaskets are free. The make and material of bearings are free provided that they are of the original type and dimension; eg, roller, plain, metal etc.

All fluid lines are free, as is their location and attachment (including oil, water and brake fluid lines). Any lines passing through a bulk-head must be securely grommeted. Any oil or water line passing through the habitacle must be fitted in such a way that the occupants will not be endangered should the line rupture.

The addition of relays and fuses to the electrical system is allowed. All electrical cables are free.

The make and capacity of the battery is free, as is the make and capacity of the generator. The nominal voltage of the electrical system must be retained.

The ignition coil, condenser and distributor, ignition points, spark plugs and all associated wiring are free subject to the ignition system remaining the same as provided by the manufacturer of the model concerned, eg battery/coil or magneto. The fitting of an electronic ignition system is permitted, replacing a mechanical one and vice versa. The number of spark plugs may not be increased.

SR 3.2 EXTREME 4WD

Highly-modified 4WD with engine not exceeding 6000cc for petrol engines or 7200cc for diesel engines.

SR 3.2.1 ELIGIBILITY/DEFINITION

A four-wheel drive automobile, as defined in GR 1. The original shape of the body must be from a series production automobile which complies with GR 2-29 and, if required by regulations for a specific event, GR 30-36.

All modifications are allowed, save for the restrictions specified hereunder.

SR 3.2.2 COACHWORK/CHASSIS

The body must be derived from a production four-wheel drive vehicle and substantially resemble it.

The height, width and length may not be reduced from that of the bodyshell from which the vehicle is derived. The chassis is free.

The use of chassis/cab vehicles without rear bodywork, and of tray-top vehicles, is prohibited on the grounds of safety.

SR 3.2.3 ROLL OVER PROTECTION

A roll cage of at least Type 3, as specified in Schedule J (refer "General Requirements for Cars and Drivers"), and which incorporates door bars, must be fitted (see also article 3.2.5.2 of Schedule J) or alternatively must incorporate a frame which complies with GR 9.

SR 3.2.4 ENGINE

The engine is free, subject to it being of not more than 6000cc capacity for petrol engines or 7200cc for diesel engines, inclusive of any turbo/supercharging, rotary and/or diesel correction factors.

Modifications to the engine are free.

The location of the engine is free, save that no part of the cylinder block may extend across a line drawn at right angles to the longitudinal axis of the car, at a point halfway between the front and rear wheel hub centres.

SR 3.2.5 TRANSMISSION

The gearbox, housing, transfer case, differentials and axle housings are free.

SR 3.2.1 ELECTRICAL

The requirements of GR 24-26 must be complied with.

© Confederation of Australian Motor Sport Ltd. All use subject to Conditions of Use at *www.camsmanual.com.au*