SPECIFICATIONS OF AUTOMOBILES

All vehicles in races and other speed events must comply with the General Requirements of Automobiles (see "General Requirements for Cars and Drivers" in the CAMS Manual of Motor Sport).

Ist Category – Racing Cars
Formula Vee

Category Association:

Formula Vee Association of Australia
10 Hod Way, Malaga WA 6090
President: Mr Scott Wythe
Website: *www.fvee.org.au*

PREAMBLE

Formula Vee has been adopted by CAMS as its entry-level open wheel circuit racing formula. CAMS is ultimately responsible for the approval of the regulations or changes thereto, and responsible for publishing the regulations via the CAMS Manual of Motor Sport and associated Bulletins as necessary. The Formula Vee Association of Australia Incorporated (FVAA) is recognised by CAMS as the sole entity representing competitors in the entry level formula (ie, Formula Vee). The FVAA is the open wheel entry level category representative group which is made up of a representative from each of the CAMS and FVAA-affiliated Formula Vee state associations.

The FVAA is recognised by CAMS as the sole competitor entity which may make recommendations regarding maintenance of and/or proposed changes to technical regulations for the entry-level, open wheel category, and/or sporting regulations for the conduct of competition activity for such vehicles.

CAMS will consult with the FVAA exclusively regarding the maintenance and/or proposed changes to the technical and sporting regulations.

The FVAA will be responsible for consultation processes within its membership and with other interested parties as may be appropriate from time to time.

Vehicles shall conform with the General Requirements of Automobiles as laid down in "General Requirements for Cars and Drivers" and "Race" in the CAMS Manual of Motor Sport and these regulations.

The FVAA Technical Manual must be read in conjunction with the following regulations to ensure that Formula Vee cars are constructed and prepared in accordance with the regulations. The FVAA Technical Manual can be accessed via the FVAA website, *www.fvee.org.au,* or by contacting any Formula Vee State Scrutiny Director or the FVAA National Administrator.

The 1600cc engine shall be admitted into competition on a state-by-state basis by agreement between the relevant State Formula Vee Association and CAMS State Council.

Prior to being issued with a log book a Formula Vee must be issued with a Certificate of Compliance from a State Formula Vee Association.

I. DEFINITION

1.1 Formula Vee is a formula for single-seat, open wheel racing cars based on Australian Volkswagen Type 1 sedan components. The class is restrictive in specification so as to emphasise driver ability rather than design and preparation of the car.

The term "VW" should be considered, where relevant within these regulations, as shorthand for "Australian Volkswagen Type 1", and cannot be inferred to represent components or specification used on Type 1 sedans delivered outside of Australia. Neither the total assembly nor any component of the engine, transmission, rear axle, front suspension, steering or brakes may be altered, modified, or changed, nor be of other than VW manufacture or standard Australian VW Type 1 specification unless specifically authorised within these Regulations.

Use of the term "standard" within these Regulations shall identify components of VW specification and manufacture as installed on Australian-delivered Type 1 Volkswagen sedans and in the case of components listed in art. 4, "Non-Genuine Parts", be of normal VW function and dimensional specification. Australian VW

© Confederation of Australian Motor Sport Ltd. All use subject to Conditions of Use at *www.camsmanual.com.au*

Type 1 componentry, both genuine and after-market may be used as specified within these regulations.

These regulations should be read under the guidance that only modifications or non-standard parts that are permissible are documented. Absence of documentation of a modification to a standard part or the use of a non-standard part shall be prima facie evidence of non- compliance of the modification or part under the regulations.

2. GENERAL REQUIREMENTS

2.1 Frame: The frame must be of steel tube construction. Cars with log books first issued on or after 1 January 2003 and cars fitted with a 1600cc engine must incorporate adequate roll over and side impact protection. Specifications for new chassis requirements are set out in the FVAA Technical Manual.

2.2 Bodywork:

(i) The bodywork must be constructed of fibre reinforced plastic and/or sheet metal.

(ii) A substantial portion of the frame forward of the firewall shall be enclosed by the body panels (floor pan excluded).

(iii) The bodywork rear of the firewall must extend to a transverse vertical plane passing through the rearmost point of the gear selector housing.

(iv) Air ducting may be used provided that it is not capable of pressurising the induction system.

(v) With the driver aboard and the car in racing trim no part of the car with the exception of the complete wheel may be closer than 40mm to the ground.

2.3 Suspension and Steering:

(i) The front suspension shall be any standard VW Type 1 H-beam front suspension, unless specifically stated otherwise.

(ii) The following deviations from standard are permitted:

- removal of one complete torsion bar set and sections of one or more leaves of the second torsion bar. Ignoring the internal forces associated with a pressurised shock absorber, the torsion bar pack shall be the sole springing medium for the front suspension;
- in the suspension tube where a complete torsion bar set has been removed an anti-sway bar may be installed in its place. The anti-sway bar is to be actuated by the torsion arms fitted to that tube and is not to be adjustable. The anti-sway bar may pass beyond the torsion arms only to allow the fitment of fasteners;
- removal or modification of the rebound rubbers;
- replacement of two torsion arm sealing rubbers with spacers of other material;
- removal of the standard anti-sway bar and its components;
- drilling of the upper shock absorber and stub axle steering arm tie rod mounting holes;
- welding of lugs for the purpose of locating the front suspension tubes relative to the chassis frame, or locating the steering box to the front suspension tubes;
- removal of front shock towers – permitted only if vehicle complies with upgraded forward roll over protection requirements as specified for cars first issued with log books on or after 1 January 2003. Each shock tower in its entirety may be removed provided it is replaced by a tubular strut of minimum section 50mm x 20mm x 1.6mm wall thickness, fully welded between the tubes of the H-beam;
- the location of each front shock absorber is free provided that only modifications that are not in conflict with these Regulations are made;
- the standard shocker absorber mounting boss on the lower control arm is to remain the actuating point. Attachment of the actuating mechanism to the boss shall be by mechanical means;
- the actuation mechanism for the shock absorber is free;
- the welding of mounting brackets to the front suspension tubes.

(iii) On the link pin front suspension derived from the Australian Type 1 1200 Sedan the reinforcement of the LH stub axle by the fitment of an 8mm high tensile pin or bolt (Grade 8.8 min) is compulsory. Such bolt shall pass from end to end through the hole originally provided for the fitment of the speedometer cable, and is to be held in place by a nyloc nut fitted to the inner end.

(iv) The use of re-manufactured front stub axles is permitted on front link pin suspension derived from the Australian Type 1 1200 Sedan. The remanufactured front stub axles may be of a modified type to facilitate the fitment of disc rotor hubs. The remanufactured front stub axles must be those supplied by, and bearing the mark of, the Formula Vee Association Australia. The remanufactured front stub axles must not be further modified and must conform to the requirements as detailed in the FVAA Technical Manual.

(v) The fitment of a ride height adjustment device to the H-beam tube containing the torsion spring pack is permitted.

(vi) Rear suspension:

(a) Each axle tube shall be restrained in a longitudinal direction by a member having a single pivot point. Axle tube assemblies may be rotated to facilitate assembly.

(b) Re-drilling of the shock absorber and spring plate mounting holes of the rear axle tubes is permitted. Shock absorber mountings are free. The existing shock absorber mounting brackets may be removed.

(c) Telescopic shock absorber/s must be used.

(d) Camber control devices are permitted.

(e) Brackets may be attached to the rear axle tubes.

(f) Removal of the brake pipe brackets from the axle tubes is permitted.

© Confederation of Australian Motor Sport Ltd. All use subject to Conditions of Use at *www.camsmanual.com.au*

(g) The use Type 1 1200, 1300 and 1500 axles and axle tubes is permitted.

(vii) The steering components shall be standard VW as defined in art. 1, "Definition", unless specifically stated otherwise.

(viii) The following deviations from standard are permitted:

- the use of a Type 3 steering box and pitman arm;
- the use of any steering column and steering wheel;
- re-drilling of the pitman arm tie rod attachment holes;
- removal of the steering damper and bracket;
- the use of any tie rods, tie rod ends and fitting attachments;
- relocation of the steering box or removal when rack and pinion steering is used;
- the use of a rack and pinion assembly.

2.4 Brakes:

(i) A dual circuit hydraulic system shall be used with front and rear brakes operated by separate master cylinders. Adjustable control of bias between front and rear brakes is permissible.

(ii) All hand brake components must be removed.

2.4.1 Drum Brakes:

(a) Where used, the drum braking system shall be standard Australian VW 1200 Type 1 unless specifically stated otherwise in these regulations.

(b) The following are permitted:

- the use of any master cylinders;
- the use of VW Type 1 1300 five-bolt rear brake drums. Brake shoes and linings must remain standard VW 1200 width;
- machining of brake drum working surfaces;
- the use of any lining material and bonding of linings.

(c) The use of a steel diaphragm between each rear brake drum and the respective wheel is compulsory. These diaphragms must be those supplied by, and bearing the mark of, the Formula Vee Association Australia. Such fitment must be in accordance with the fitting instructions supplied with the diaphragms.

2.4.2 Disc Brakes:

(a) The use of four-wheel disc brakes is permitted, and is compulsory on cars with log books first issued on or after 1 January 2003, and cars fitted with a 1600cc engine.

The following are permitted:

- the use of any disc rotor/hub assembly. Disc brake rotor/hub assemblies must be made from predominantly ferrous material. The disc rotor/hub assembly may only be of one or two-piece construction, and must comply with specifications as detailed in art. 3, "Weights and Dimensions";
- the use of any callipers for front and rear provided the number of pistons per calliper is not more than two, and the number of callipers per wheel is not more than one. Callipers must comply with specifications as detailed in art. 3, "Weights and Dimensions";
- the fitment of calliper mounting brackets and removal of backing plates;
- machining of the rear wheel bearing carriers to limit axle end float;
- the use of any brake pad friction material.

(b) Cross drilling or grooving of the friction surfaces of rotors or is not permitted. The minimum disc rotor thickness shall be 8mm.

2.5 Wheels and tyres:

(i) Wheels shall be 15" diameter, five or four stud wheels with rim widths optional between 4" and 6". Other than the mandatory diaphragms as per 2.4.1(c) above, spacers between the wheel and the wheel mounting face of the brake drum are not permitted. Safety (JJ) rims are optional but highly recommended.

(ii) Hub cap retaining clips and rivets must be removed.

(iii) Tyres shall be of a single make and specification as determined by the Committee of the FVAA and approved by CAMS. The following conditions of use apply:

(a) Where front and rear tyre sizes are not common, it is not permissible to fit front tyres to the rear axle or rear tyres to the front axle positions. All four tyres fitted to the car must be the same brand.

(b) Where tyre tread depth indicators are not provided, permissible tyre tread depth at the commencement of each event and practice therefor shall be not less than 0.5mm measured at each circumferential groove at any four points equidistant about the circumference of the tyre.

(c) Tyres shall be Dunlop CR82 (434):

Front:	120/590-15
Rear:	135/620-15

or American Racer – Formula Vee Racing Tyre:

Front:	5.5/70.0 x 15
Rear:	6.0/75.0 x 15

© Confederation of Australian Motor Sport Ltd. All use subject to Conditions of Use at *www.camsmanual.com.au*

(iv) Use of aluminium alloy or composite wheels is optional provided that the wheels mount in the normal manner and that the weight of each wheel (less tyre) is not less than 5.8kg. Wheel nuts or studs for mounting of alloy wheels shall be in accordance with the recommendations of the wheel manufacturers.

2.6 Engine:

(i) The engine shall be VW 1200cc or 1600cc Australian Type 1. The use of the 1600cc engine option will be permitted on a state-by-state basis. For further information contact the Formula Vee Scrutiny Director in your State.

Only standard VW Type 1 1200cc engine components shall be used for the 1200cc engine, and only standard VW Type 1 1600cc components shall be used for the 1600 cc engine, unless specifically stated otherwise in these regulations. The engine shall be mounted inboard of the rear axle.

(ii) **Balancing** of all engine moving parts is permitted. Such balancing is to be achieved by the removal only of metal.

(iii) **Polishing** of moving part contact surfaces is permitted.

(iv) **Crankcase:**

(a) The use of any VW Type 1 1200cc to 1600cc crankcase is permitted. The use of cylinder centring rings, required in conjunction with crankcases having other than 1200 cylinder spigot holes on 1200cc engines, is permitted.

(b) Machining of the crankcase in the following manner is permitted:

- crankcase halves may be faced and cylinder seats machined for equal deck height. Re-sizing of the rear main oil seal and oil pump apertures;
- crankshaft and camshaft tunnels may be align bored and thrust faces machined to accept standard or oversize bearings;
- drilling and tapping of the crankcase to accept a temperature sender unit and/or for the purpose of fitting an external oil cooler and/or filter;
- reconditioning of crankcase and cylinder head threads;
- enlargement of the oil pickup inlet gallery when using a early crankcase to accept a VW 1500/1600 oil pickup pipe;
- enlargement of the crankcase breather hole on early crankcases to standard VW dimensions;
- machining of the front of the crankcase to accept oil seal and the machining of the labyrinth scroll from the rear of the crankshaft pulley.

(v) **Crankshaft:**

- grinding of crankshaft journals to accept standard undersized bearings is permitted;
- re-drilling and/or enlarging of the dowels locating the flywheel to the crankshaft is permitted;
- **For 1200cc engines** the crankshaft must comply with the minimum weight specified in art. 3, "Weights and Dimensions";
- **For 1600cc engines** crankshafts shall bear the VW manufacturer's logo and be part no. 113 105 101E, 311 105 101E, 311 105 101F or 040 105 101.5. Lightening of the crankshaft is permitted. Metal removed must be confined to the circumference face of the crankshaft webs. The minimum weight shall be as specified in Art.3, "Weights and Dimensions".

(vi) **Connecting Rods:**

- Re-sizing of connecting rod big end tunnels and replacement of gudgeon bushes is permitted;
- **For 1200cc engines** the connecting rods must comply with the minimum weight specified in art. 3, "Weights and Dimensions";
- **For 1600cc engines** lightening of the connecting rods is permitted. No metal may be removed from the beam of the connecting rod. The minimum weight shall be as specified in Art. 3 - Weights and Measures.

(vii) **Flywheel and clutch assembly:**

- **For 1200cc engines** machining of all flywheel surfaces is permitted. The flywheel must comply with the minimum weight specified in art. 3, "Weights and Dimensions". The use of any flywheel, as used on a Type1 or Type 3 VW originally fitted with a six volt or 12 volt electrical system, is permitted:
- **For 1600cc engines** lightening of the flywheel is permitted by machining of the clutch plate and pressure plate contact surfaces and the back face only. The lightened flywheel shall respect the dimensions in the diagram below:

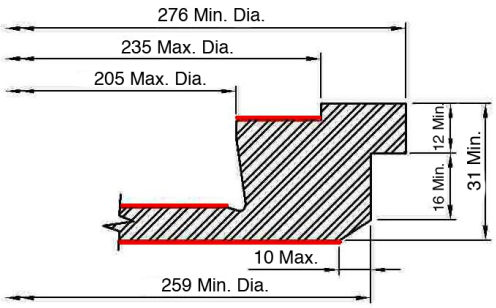

Only surfaces highlighted in red may be machined

© Confederation of Australian Motor Sport Ltd. All use subject to Conditions of Use at *www.camsmanual.com.au*

Balancing of the flywheel may only be achieved by localised spot facing. The minimum weight shall be as specified in Art. 3 – Weights and Measures. Lightening of the pressure plate is permitted. The minimum weight shall be as specified in Art. 3 – Weights and Measures. A conventional solid centre full circle friction face clutch driven plate shall be used. The facings shall be of conventional friction material. Ceramic, metallic and carbon fibre facings are excluded.

(viii) **Camshaft:** Camshafts must conform with the FVAA VW cam lobe reference profiles specifications as detailed in art. 3, "Weights and Dimensions". Camshafts must be checked as per the scrutiny procedures described in the FVAA Technical Manual.

(ix) **Camshaft followers:** Machining of the camshaft contact face only of the camshaft followers is permitted. Modified contact face must not be concave.

(x) **Cylinders, Pistons, Rings and Gudgeon Pins:**

- Removal of metal from pistons for balancing purposes is permitted. The removal of metal from gudgeon pins is permitted for the 1200cc engine only. Metal removal must be confined to the inner surfaces of the piston so that the skirt perimeter is not modified in any way;
- **For 1200cc engines** the pistons and gudgeon pins must comply with the minimum weight specified in art. 3, "Weights and Dimensions".
- **For 1600cc engines** pistons may be lightened. Gudgeon pins are not to be lightened. Pistons shall be cast aluminium alloy with a steel insert and the profile of the bottom of the piston skirt shall be as manufactured. Piston and gudgeon pin shall comply with the minimum weight and dimensions specified in art. 3, "Weights and Dimensions". A piston ring, functioning in the normal manner, shall be fitted in each groove of the piston.

(xi) **Cylinder Heads:**

(a) **Porting:**

- **For 1200cc engines** only VW Type1 1200 cylinder heads are permitted. "Porting and polishing" of the inlet and exhaust tracts is permitted provided that the port diameters at the inlet and exhaust manifold flange faces do not exceed the specified dimensions as detailed in art. 3, "Weights and Dimensions". Removal of metal is permitted, save for the combustion chambers which must remain as cast. The addition of any form of material is not permitted.
- **For 1600cc engines** only VW Type1 1600 twin port cylinder heads of genuine VW manufacture and bearing the cast-in logo and part number "VW" and "040 101 375.2" or replacement heads bearing the cast-in logo and part no. "IS" and "040 101 375.2" or replacement heads manufactured by Auto Linea and bearing the cast-in logo and part number "DIN" and "040 101 355.19" are permitted. "Porting and polishing" is not permitted and ports are to remain in "as cast" condition. The combustion chambers must remain as cast. The addition of any form of material is not permitted.

(b) Replacement of **valve seat inserts** is permitted. The throat diameter may be enlarged. All valve seat cuts must be confined to the insert. Top cut shall be 15˚. Throat cut shall be 75˚. Valve seat angle shall be 45˚ ±1.5˚.

(c) Replacement of **valve guides** is permitted. Such replacements must conform to the specified dimensions and must be positioned in the standard VW manner (refer FVAA Technical Manual).

(d) **Valve springs** are free provided that parallel single springs only are used and are fitted without unauthorised modification to another component.

(e) Any aluminium alloy or steel VW **pushrod** may be used. Modification of pushrod length is permitted.

(f) Machining of the first **cylinder head cooling fin** for cylinder clearance is permitted.

(g) **Fly cutting** of the cylinder head is permitted to obtain specified combustion chamber volume is permitted as specified in art. 3, "Weights and Dimensions".

(h) Secondary fly cutting of the cylinder head to recover combustion chamber volume is permitted. Such machining shall be concentric with the cylinder bore and in the direction of the valves. The secondary cut shall be a single plane, parallel to, and with a single uniform step from the cylinder spigot contact plane.

(i) **Valve spring retainers** are free provided that the minimum weight (less collets) is 10.5g.

(xii) **Valve Train:**

(a) Shimming of the rocker shaft posts to the cylinder head is permitted. Machining of the side of the rocker shaft post to facilitate alignment of the tappet with the valve centreline is permitted.

(b) The valve rockers must be of genuine VW manu-facture and of a type supplied on Australian VW 1200 or 1600 Type 1 sedans. No modification of the rocker is permitted save for removal of metal on the underside of the tappet lever arm and tappet screw boss. Tappet adjusting screws shall be 8mm diameter. The rocker arm ratio shall not exceed 1.18:1 (refer Formula Vee Technical Manual for details). Wave washers may be replaced with flat washers or spacers, and the spring clips that locate the rockers may be replaced by spacers held by bolts or pins inserted into the end of the rocker shafts. The maximum valve lift measured at any time during or at the completion of competition shall be 9.6mm on the inlet valves and 9.2mm on the exhaust valves. The valve lift will be measured "as found" in *parc fermé*.

(c) Shimming at the valve spring seat is permitted.

(d) The use of non-standard swivel foot valve adjusters is permitted provided no non-authorised modifications to any other components are made.

(xiii) **Lubrication System** - the following is permitted:

- the use of any standard VW Type 1 oil pump;
- the fitting of an external oil cooler.

© Confederation of Australian Motor Sport Ltd. All use subject to Conditions of Use at *www.camsmanual.com.au*

- removal of the standard oil cooler;
- the fitting of an external oil filter;
- the use of a non-standard oil pump cover plate. The standard oil pump outlet port may be blocked when such a cover plate is used;
- the use of a sump extension. Any such extensions must be fitted without modification of the crankcase and conform with the specified dimensions. The oil pickup pipe may be extended. The sump plate is free;
- the installation of baffles completely within the crankcase;
- the standard crankcase oil filter/breather outlets may be modified;
- any oil filler neck extension and cap may be fitted.

(xiv) **Engine Assembly:**

(a) The use of an offset key or an adjustable cam gear to adjust valve timing is permitted. A standard VW genuine or non-genuine (as per Art. 4) camshaft gear may be modified to provide the adjustment. The gear mounting holes on the camshaft may be drilled and tapped to secure the gear to the camshaft.

(b) Rocker covers are free.

(xv) Any previously-machined surface may be re-machined provided that the total surface is machined to a plane parallel to the original machined surface, and that such machined component respects all relevant dimensions after machining. The intent of the machining must be to render second hand parts serviceable and not to gain a performance advantage.

Only standard VW Type 1 1200cc engine ancillaries shall be used with the 1200cc engine, and only standard VW Type 1 1600cc ancillaries shall be used with the 1600 cc engine, unless specifically stated otherwise in these regulations.

2.7 Engine Ancillaries:

Only standard VW Type 1 1200cc ancillaries shall be used with the 1200cc engine and only standard VW Type 1 1600cc ancillaries shall be used with the1600cc engine unless specifically stated otherwise in these regulations.

(i) **Carburettor:**

For 1200cc engines:

(a) The carburettor shall be from an Australian Type 1 VW 1200 unless specifically stated otherwise.

(b) The use of any jets or floats which may be fitted without alteration to the carburettor is permitted. The following are defined as jets:

• main jet	• pilot air bleed jet	• pilot jet	• air correction jet
• accelerator pump jet	• float needle seat	• emulsion tube	• pump discharge nozzle

(c) The use of any metal venturi is permitted provided that it is located in the standard position.

(d) The removal of the choke mechanism and plugging of the choke shaft holes is permitted. Any such plugs must be flush with the inner surface of the carburettor top.

(e) Modification of the casting of the carburettor top by the removal of casting flash only is permitted. The accelerator pump discharge supporting cast web must remain untouched.

For 1600cc engines:

(f) The carburettor shall be a standard Solex 34PICT-3 or BoCar equivalent.

(g) Modification of the carburettor is not permitted apart from removal of the automatic choke and plugging of the choke butterfly shaft holes. Any such plugs must be flush with the inner surface of the carburettor top. Plugging of the throttle butterfly air bleed hole is permitted. The venturi is considered to be an integral part of the carburettor and may not be modified. A brace may be fitted between the carburettor and engine to prevent movement.

(h) The use of any jet as below, which may be fitted without alteration of the carburettor, is permitted.

The following are defined as jets:

- main jet
- pilot jet
- pilot air bleed jet
- air correction jet
- pump discharge nozzle
- float needle and seat

A fibre gasket must be placed either side of the restrictor plate; the gasket shall have a minimum inside diameter of 34mm and a maximum thickness of 1.6mm. Carburettor mounting stud/bolts shall be such as to securely locate the restrictor plate with the orifice centred in the carburettor throat. All air and fuel in the air/fuel mixture supplied to the engine shall pass through the restrictor plate.

A control restrictor plate shall be fitted between the bottom flange of the carburettor and the top flange of the inlet manifold. The restrictor plate shall have a 29mm diameter orifice and be supplied by the representative Formula Vee association of each. The restrictor plate shall remain the property of the relevant association and shall not be modified in any way.

© Confederation of Australian Motor Sport Ltd. All use subject to Conditions of Use at *www.camsmanual.com.au*

(ii) **Inlet Manifold:**

For 1200cc engines:

The inlet manifold must be supplied by, and bearing the mark of, the Formula Vee Association of Australia. The inlet manifold must be fitted in the standard manner. No modifications to any part of the inlet manifold are permitted including coating of the internal and external surfaces.

For 1600cc engines:

(f) The inlet manifold shall be standard VW Type 1 1600 twin port unless stated otherwise in these regulations.

(g) The heat riser tube and alloy heat sink must be removed.

(h) The standard 1600 manifold end castings shall be used. Each competitor whose automobile is fitted with a manifold that has been cut down for valid chassis clearance reasons may apply to the FVAA for a temporary exemption until 31 December 2008 to enable chassis modifications to be made.

(i) Match porting to a depth of 40mm in the manifold casting at the manifold/head joining face is permitted until 31 December 2008; after that date it must be stock standard.

(j) A fibre gasket of a maximum thickness of 3mm may be used between the manifold and the head.

(iii) **Aircleaner:**

(a) Removal of the standard aircleaner is permitted.

(b) The aircleaner shall have a horizontal interior surface located no higher than 10mm above the uppermost edge of the carburettor air inlet. The interior of the air cleaner, to a minimum diameter of 70mm centred on the carburettor air inlet and to a minimum height of 40mm above the horizontal surface, shall be free space.

(iv) **Exhaust System:** The exhaust system is free but must comply with the general requirements for 1st Category cars.

(v) **Generator System:** A six-volt or 12-volt generator body and mounting post shall be retained in its original location. Each component of the generator solely related to the generation of electricity (armature, stator, windings etc) may be removed. The regulator is free as to type and location or may be dispensed with.

(vi) **Cooling System:**

(a) Any VW Type 1 fan and fan housing is permitted.

(b) The removal of cooling ducts is permitted with the exception of the standard fan, cylinder covers and fan housing. The cylinder covers may be trimmed as required to accommodate chassis and bodywork. The fan must function normally.

(c) Modification of the fan housing is permitted in order to provide for an airtight passage for any safety cage bracing and an orifice (to the specified dimensions) for external oil cooler hoses.

(vii) **Distributor:**

(a) The distributor is free provided it retains the original drive and location and it employs single contact breaker points and mechanical high tension current distribution.

(b) The advance curve is free, but must be mechanically controlled in the standard manner by the distributor.

(c) The ignition coil may be relocated.

(viii) **Crankshaft Pulley**: The use of an aluminium alloy replacement for the standard steel crankshaft pulley is permitted. Such replacement pulley shall have an OD of not less than 146mm with a vee groove width of 12mm max. and a groove depth of 13mm max.

(ix) A "Vee" section fan belt with a minimum nominal top width of 9.5mm must be fitted. It must pass over the crankshaft and generator pulleys, but need not be in contact with any other device. The belt length is free.

(x) **Fuel Pump:** Only a mechanical fuel pump fitted to the engine shall be used. On pumps with a die-cast pump body it is strongly recommended that the discharge connection of the pump be replaced by a screw in barbed fitting.

2.8 Transmission:

(i) The transmission shall be standard VW, as defined in Section 1 "Definition", unless specifically stated otherwise. The transmission shall be located behind the rear axle.

(ii) Gear selection mechanism must be mechanical in operation. Electronic, sequential, hydraulic or pneumatic systems are prohibited. Synchromesh shall be in place and operating on at least three gears.

(iii) The following deviations from standard are permitted:

(a) The use of any standard VW Type 1, 2 or 3 component which can be fitted without modification to itself or any other component is permitted. Any of the following standard VW gear ratios is permitted:

• **Barrel Type:**

1st	3.80:1
2nd	2.06:1
3rd	1.22:1 or 1.26:1 or 1.32:1
4th	0.82:1 or 0.89:1
C/W pinion	4.125:1 or 4.375:1

© Confederation of Australian Motor Sport Ltd. All use subject to Conditions of Use at *www.camsmanual.com.au*

- **Split Type:**

1st	3.60:1
2nd	1.88:1 or 194:1
3rd	1.22:1 or 1.23:1
4th	0.82:1
C/W pinion	4.430:1 or 4.375:1

(iv) The barrel type case must be used with the 1600cc engine and only the following gearbox ratios are permitted:

1st	3.80:1
2nd	2.06:1
3rd	1.26:1
4th	0.89:1
C/W pinion	4.125:1

3. WEIGHTS & MEASURES

3.1 Vehicle:

• **Minimum Racing Weight (see "Definitions"):**	1200cc engine	475kg
	1600cc engine	490kg
• **Wheelbase:**	Pre-2003	2095 ± 25mm
	1/1/03 on	2220mm maximum
• **Front overall width:**		1585mm maximum
• **Rear overall width:**		1610mm maximum
• **Overall length (Note 1):**	Pre-2003	3425mm maximum
	1/1/03 on	3525mm maximum

Note 1: Measured between vertical planes at the vehicle foremost point and the rearmost point of the gear selector housing.

3.2 Body:

• Width at firewall: **600mm minimum**

(Main body profile only. Width at firewall must be maintained over a vertical cross section, 300mm in height, for at least 300mm forward from the firewall. Cars subject to a log book issued prior to 1 January 2001 shall be exempt from the requirements of the present article subject to continued compliance with the body width requirements in force at the time of issue.)

3.3 Engine:

(i)	**Crankcase:**		
	• Cam follower bore face to crankcase joint face:		31mm maximum
(ii)	**Crankshaft:**		
	• Stroke:	1200cc engine	64.1mm maximum
		1600cc engine	69.1mm maximum
	• Weight:	1200cc engine	8.1kg minimum
		1600cc engine	040 105 101.5: 7.95kg minimum all others: 8.8kg minimum **Note:** each crank weight includes flywheel dowels, camshaft drive gear and key, spacer, distributor drive gear, circlip No. 3 main bearing
(iii)	**Flywheel weight:**	1200cc engine	5.4kg minimum
		1600cc engine	7.0kg minimum
	Clutch pressure plate weight:		3.3kg minimum
(iv)	**Camshaft:**		
	• Inlet and exhaust phase angle:		107° ± 15'
	• Cam follower weight:	1600cc engine	80g minimum for engines sealed after 1 July 2008

© Confederation of Australian Motor Sport Ltd. All use subject to Conditions of Use at *www.camsmanual.com.au*

(v) **Pistons/Cylinders/Connecting Rods:**

• Cylinder bore:	**1200cc engine**	77.21mm maximum
	1600cc engine	85.70mm maximum
• Piston top to cylinder seal face:	**1200cc engine**	1.0mm minimum
	1600cc engine	Refer to table below

• Weight and Dimensions:
piston/gudgeon pin (less gudgeon clips and piston rings):

1200cc engine	330g minimum
1600cc engine	510g minimum for engine tops sealed after 1 July 2008
1600cc engine only	Minimum length from crown to bottom of skirt at gudgeon pin axis **62.5mm** Minimum length from crown to bottom of skirt at 90 deg. to gudgeon pin axis **80.5mm**

• Weight:
connecting rods:

1200cc engine	440g minimum (incl. little end bush, cap, bolts but not big end shells)
1600cc engine	570g minimum (incl. little end bush, cap and nuts but not big end shells)

Deck height table –1600cc engine

Combustion Chamber Capacity		Deck Height
From	To	
48cc	And above	1.00mm
47cc	48cc	1.15mm
46cc	47cc	1.35mm
45cc	46cc	1.50mm
44cc	45cc	1.70mm
43cc	44cc	1.85mm
42cc	43cc	2.05mm
41cc	42cc	2.20mm
40cc	41cc	2.40mm

© Confederation of Australian Motor Sport Ltd. All use subject to Conditions of Use at *www.camsmanual.com.au*

(vi) **Cylinder Head:**

1200cc engine		
• Intake port diameter at flange face:		29.0mm maximum
• Exhaust port diameter at flange face:		33.0mm maximum
• Combustion chamber volume:		38cc minimum
• Valve guide length:		62.5mm ± 2.5mm
• Cylinder head secondary cut OD:		77.0 ± 0.5mm
• Cylinder head secondary cut depth:		1.5mm
• Outside diameter of inlet and exhaust port inserts:		
	inlet	36.5mm
	exhaust	33.5mm
1600cc engine		
• Intake port diameter at flange face:		31.0mm maximum
• Exhaust port diameter at flange face:		32.0mm maximum
• Combustion chamber volume:		Refer to table below
• Valve guide length:		62.5mm ± 2.5mm
• Cylinder head secondary cut OD:		85.0mm ± 0.5mm
• Outside diameter of inlet and exhaust seat inserts		38.5 mm inlet 35.5 mm exhaust

(vii) **Valve Train:**

• Valve seat angle:		45° ± 1.5°
• Valve head diameter:		
1200cc engine	intake	31.49mm maximum
	exhaust	29.97mm maximum
1600cc engine	intake	35.50mm maximum
	exhaust	32.00mm maximum

(viii) **Lubrication System:**

• Sump extension volume:	500cc maximum

3.4 Engine Ancillaries:

(i) **Carburettor:**

1200cc engine	
Venturi dimensions:	
• OD:	27.8 ± 0.5mm
• Length:	26.0 ± 0.5mm
1600cc engine	As standard

(ii) **Inlet Manifold Dimensions:**

1200cc engine	
FVAA manifold	As standard
1600cc engine	
• ID Horizontal tube:	32.00mm maximum
• Casting diameter at flange:	31.00mm maximum

(iii) **Fan Housing:**

• Oil hose orifice dimensions:	75.0 x 30.0 mm maximum

(iv) **Brakes:**

• Front disc rotor/hub assembly, less bearings:	5.9kg minimum
• Rear disc rotor/hub assembly:	5.2kg minimum
• Calliper assembly (less pads & brake hoses):	1.9kg minimum
• Disc rotor diameter front & rear:	280mm maximum

© Confederation of Australian Motor Sport Ltd. All use subject to Conditions of Use at *www.camsmanual.com.au*

4. NON-GENUINE PARTS

The use of the following non-genuine VW replacement parts is permitted. The parts must be standard replacement parts in terms of configuration and functional dimensions for all practical purposes replicate the original VW component. Their fitment and shall not result in unauthorised modification of any other component.

a	gaskets and seals	j	brake shoes	s	rocker covers
b	cylinders and pistons	k	wheel cylinders	t	air correction jet carrier
c	bearings	l	clutch plate and pressure plate	u	valve seat inserts
d	valve guides	m	king pins	v	brake drums
e	engine valves	n	torsion arm link pins	w	cam followers
f	valve springs	o	axle boots & axle tubes	x	valve push rods
g	fuel pump	p	camshaft & gear	y	crank cases
h	voltage regulator	q	steering box	z	ball joints
i	fan & fan housing	r	oil pump		

Any external surface of the crankcase, gearbox, front H Beam, rear axle tubes or fan housing and tinware may be painted or plated.

5. AUTHORISED PARTS

The following parts can be from any source, provided their use does not result in the unauthorised modification of any other component:

a	threaded fasteners (but not wheel mounting bolts)	h	ignition coil	o	starter motor
b	brake lines	i	6v or 12v batteries	p	swivel foot valve adjusters
c	fuel lines	j	shock absorbers	q	disc brake callipers
d	spark plugs	k	fuel filters	r	disc rotor/hub assemblies
e	master cylinders	l	ignition points	s	fan belt
f	carburettor jets and venturi (1200 only)	m	washers	t	distributor
g	push rod tubes	n	piston rings		

6. FUEL

Each competitor must only use pump fuel ~~Only fuel~~, as defined in Schedule G **of the 2009 CAMS Manual of Motor Sport, except that all fuel must be used without any additives.** (~~refer "General Requirements for Cars and Drivers" in the CAMS Manual of Motor Sport), may be used.~~

7. SCRUTINY AND SEALING

(i) All engines and transmissions shall be scrutinised and sealed in accordance with the procedures detailed in the FVAA Technical Manual.

(ii) A record of all sealing must be entered on the FVAA Sealing Record Card and detailed on the standard FVAA Record Sealing Sheet (Certificate of Compliance). After 1 July 2008, Sealing Record Cards for engine and gearbox must be available for inspection at any competition for which the vehicle is entered. Vehicles without, or unable to produce on demand, valid Sealing Record Cards for engine and gearbox are ineligible for Formula Vee competition.

(iii) Scrutiny for sealing purposes must be conducted by accredited FVAA Sealing officers. No Sealing Officer may seal the same sections of an engine or a gearbox on consecutive occasions (which shall be deemed to be an invalid sealing procedure) except under emergency circumstances in the course of an event for which the vehicle is entered, in which instance the sealing is valid for the duration of the event only.

continued ...

© Confederation of Australian Motor Sport Ltd. All use subject to Conditions of Use at *www.camsmanual.com.au*

(iv) Scrutineers are to be allocated in accordance with the procedures in the FVAA Technical Manual.

8. ELECTRONIC SYSTEMS

8.1 Electronic communication systems designed to provide communication between driver and other persons during competition (eg, radio, mobile phone etc) are not permitted. No electronic systems capable of controlling a function of the car are permitted unless specifically authorised in these regulations.

9. COMPETITION NUMBERS AND BACKGROUNDS

9.1 As an alternative to the stipulations of Schedule K (refer "General Regulations of CAMS" in the CAMS Manual of Motor Sport), competitors shall have the option of complying with the following schedule of specifications:

Background

- white in colour (regardless of the principal colour of the vehicle bodywork)
- rectangular in shape, defined by a black border 3mm in width
- 230mm in length x 190mm in height, inclusive of the black border

Numerals

- black in colour
- of the typestyle known as **ZURICH BOLD** *(see example below)*
- 165 mm in height

Location

- must be displayed in three locations:
- on the nose of the vehicle, clearly legible to a person standing at least 10 metres directly in front of the vehicle
- on each side of the vehicle, located between the rear of the driver and the leading edge of the rear wheel, at a minimum height of 300mm above the lower edge of the vehicle.

ZURICH BOLD **1 2 3 4 5 6 7 8 9 0**

© Confederation of Australian Motor Sport Ltd. All use subject to Conditions of Use at *www.camsmanual.com.au*