AUTO TEST

Observed Section Trials (OST)

This section describes the constructional requirements for cars taking part in what are described as Observed Section Trials. These events were introduced to Australia from England in 1950 by the late John Pryce and have since been conducted regularly by the Austin 7 Club Inc. whose Competitions Committee has developed the specifications for the cars involved.

Observed Section Trials are intended to be strictly of amateur status and involve the cars traversing marked sections (the number depending only on the time available) of muddy or slippery surfaces or tortuous, steep, or otherwise difficult terrain. The purpose of each Competitor is to traverse the whole of each section non-stop from a standing start, without departing from the marked course or hitting any of the markers en route.

Sections, which may vary in length from 25m to 100m or more, are each divided into 10 parts, each marked by opposite pairs of pegs or markers. Points are awarded for the number of such pairs passed by the leading edge of a front wheel before the non-driven wheels both cease rotating. Pegs need not be at uniform intervals along the section – the distance apart is determined solely by the estimated degree of difficulty; however they must always be widely enough spaced in each pair for it to be possible for cars to pass between without touching them.

The competition must not be a speed event and must not be timed, nor shall the highest speed attained be in any way a determinant of the competition; in fact, high speed is usually penalised by hitting markers, colliding with obstacles or leaving the course. The purpose is to maintain traction and manoeuvrability under difficult conditions.

Prior to constructing or modifying an OST car, please check with the Austin 7 Competition Committee Representative to ensure specifications are relevant or in a state of imminent change. The OST Committee would be most happy to provide assistance with the interpretation and explanation of these specifications, or on any area of car construction.

OST FORMULA

1. GENERAL

This Formula describes the constructional requirements for cars taking part in Observed Section Trials. Supplementary Regulations for individual events may add to or subtract from these requirements to meet special cases, but such alterations shall be kept to an absolute minimum.

This Formula shall remain in force for the duration of the year of issue without alteration and will be reviewed annually in the final quarter of each year. Any amendments will be announced by 1 January, and the Formula as amended shall then remain in force for the ensuing calendar year.

Any car constructed to this Formula shall be deemed to comply for three years after a change has been made to this Formula, except where change has been made for reasons of safety.

2. ENTRIES

(i) Each automobile competing in an Observed Section Trial shall carry a crew of two persons, including the driver.

(ii) The entrant and the driver shall hold a CAMS Level 2NS licence as a minimum.

3. ELIGIBLE CARS

Only cars complying with the following description will be eligible to compete:

(i) A four-stroke reciprocating engine with a maximum engine capacity of 1600cc running on commercial fuel. Turbocharging or super-charging is not permitted. Rotary engines are not permitted.

(ii) A wheelbase not less than 1900mm for cars with an engine capacity of up to 850cc and 2030mm for cars with an engine capacity between 851 and 1600cc (refer Figure 1).

(iii) Two-wheel drive only.

(iv) An operable reverse gear.

(v) An open body which must be fitted with seats for at least the driver and passenger. Hard tops are not permitted.

(vi) Minimum width front 1145mm, minimum width rear 1270mm, each measured outside of tyre to outside of tyre at axle centre height (refer Figure 2).

4. TYPES OF CARS

Competing cars shall be one of only two types:

(i) **Front-engined cars:** The engine must be located so that the centre of the foremost spark plug orifice is not more than one fifth of the actual wheelbase to the rear of a line connecting the centres of the front wheel hubs (refer Figure 3).

(ii) **Rear-engined cars:** Free engine placement provided the cockpit is located entirely between the axle centre lines

and forward of the foremost point of the engine.

5. CONSTRUCTION OF CARS

(i) **General:** Each car must be:

(a) of sound construction and mechanical condition, have no temporary parts, and be maintained in good condition;

(b) fitted with four wheels only. Duplication of wheels is not permitted. Two driven wheels only are allowed and a differential gear in full and free operation must be fitted between them. Limited slip differentials are not permitted. Steering shall be by the front wheels only, controlled by a steering wheel;

(c) fitted with a body of adequate strength and workmanship, providing a compartment for the driver and passenger effectively isolated from the engine by a bulkhead suitable and sufficient, in the case of fire, to inhibit the passage of flame. This compartment must be fitted with a rigidly supported floor, cases or covers of solid material separating it from transmission shafts and joints, brakes, road wheels and their attachments and linkages to protect the occupants;

(d) on both front- and rear-engined cars, be fitted with a cover of metal or solid non-flammable material, covering and surrounding the engine and fixed by a strap or other fastenings of adequate strength and efficiency (refer Figure 6);

(e) on front-engined cars the bodywork, together with all external equipment, shall not overhang the rear axle centre line by more than one third of the wheelbase measured horizontally from a line connecting the centres of the rear hubs, and

(f) on rear-engined cars the bodywork shall not extend rearwards more than 75mm behind the rearmost part of the actual engine or gearbox or gear change mechanism (refer Figure 4).

(ii) **Coolant pipes:** All coolant pipes passing from the front to the rear of the car or vice versa, whether inside the cockpit or outside the car, must be protected from accidental contact by the driver, passenger and any person outside the car.

(iii) **Seats:** Cars must be equipped with securely attached fixed seats within the cockpit, capable of seating the driver and one adult passenger, and adequate for the purpose of retaining them within the vehicle. The rearmost portion of these seats shall not extend to the rear beyond a line connecting the centre of the rear hubs. The seat cushion (that part on which the occupant sits) shall, when uncompressed, be not less than 150mm below the top edge of the body side or door, adjacent to that seat. Other seats of any kind may be fitted, but only the passenger's seat, beside the driver, shall be occupied during competition. A hand hold for each passenger's hands shall be provided within the confines of the car.

(iv) **Safety harness:** As required by Schedule I (refer "General Requirements for Cars and Drivers" in the CAMS Manual of Motor Sport), a lap-type safety harness shall be fitted for each occupant as a minimum. Safety harnesses must be properly mounted and are subject to scrutineers' approval.

(v) **Brakes:** Each car must be fitted with effective brakes on at least two wheels. Brakes must remain operative throughout the event. Independent braking systems are permitted on the driven wheels. The operating handles for the braking system must be totally within the confines of the cockpit. (The intention of the above is to prevent contact between the driver's hands and obstacles outside the vehicle.)

(vi) **Mudguards:** Each car must be fitted at the rear with effective mudguards of solid material which must be securely attached and completely cover the tyre width and one third of the circumference of the wheel. The rear extremities must not be higher from the ground than a horizontal line passing through the centres of the wheel hubs (refer Figure 5). Front mudguards are optional.

(vii) **Exhaust system:** Each car must be fitted with an exhaust system and effective mufflers, so that hot parts are protected from accidental contact (refer Figure 7). Exhaust systems must be arranged so that exhaust gases will exit vertically up or down. Noise emission should not exceed 92 dB(A) at 3,500 rpm when measured 500mm from and at an angle of 45° to the exhaust outlet.

(viii) **Starting engine:** Each car must be fitted with an effective means of starting, other than via the transmission, eg, a starter motor or crank handle (which shall remain operable during the event).

(ix) **Ballast:** Each car must be free of ballast in any form.

(x) **Tow rope:** Each car must be equipped with an adequate non-metallic tow rope of at least 7m in length with a minimum diameter of 17mm. Whilst competing it shall be attached to the front of the vehicle, using a hook. A towing eye shall be provided front and rear marked in a contrasting colour and mounted no higher than the tops of the adjacent wheels.

(xi) **Competition number clip:** Each car must be fitted with an effective spring clip fixed to the roll bar so that the competition number is visible above the roll bar from the front and rear.

(xii) **Ignition switch:** Each car must be fitted with an easily accessible ignition switch marked to show "Off" and "On" positions.

(xiii) **Battery:** Each car's battery must be securely fixed and covered to prevent spillage of the contents.

(xiv) **Roll over protection:** Each car must be fitted with a roll over protection structure (ROPS), the main hoop of which shall consist of mild steel tubing of circular cross section, with minimum dimensions 44.45mm OD x 2.5mm wall thickness (1.75" x 12 gauge), with longitudinal bracing of minimum 25mm OD x 1.6mm (1" x 16 gauge). Other material may be used provided it and its dimensions conform to a CAMS Schedule J Type 2 roll bar (refer "General Requirements for Cars and Drivers").

The ROPS, when viewed in rear elevation, must cover the full width of the shoulders and be at least level with the tops of the heads of both occupants when normally seated.

(xv) **Fuel tanks and lines:** Fuel vent pipe must exit to the atmosphere at a level lower than the bottom of the fuel tank. The fuel cap must seal the tank. All fuel lines must be securely clipped with worm drive type clamps on all joints or connections. Pressure spring clips are not permitted.

(xvi) **Tyres and rims:** Each car must be fitted with pneumatic tyres on all wheels conforming with the following:

- (a) the maximum rim section shall be 5";
- (b) tyres must be in good serviceable condition and have no modification of the manufacturer's tread pattern or any other part of the tyre;
- (c) except as provided in sub-paragraph (f) below, each front and rear wheel must be fitted with one tyre only, inflated to not less than 84 kPa (12 psi);
- (d) tyres must not be fitted with any form of non-skid attachments, studs or chains etc;
- (e) the maximum overall width of tyres when the above conditions are fulfilled shall be 165mm unladen;
- (f) tyres of maximum 175 section, on front engine cars as defined by this Formula, may be inflated to less than 84kPa (12 psi);
- (g) tyres may be secured to rims provided that no extra traction is provided by such devices;
- (h) on front-engined cars only, the fitment of one supplementary tyre is permitted within each road tyre, provided any such supplementary tyre has a conventional road pattern tread and does not act as an aid to traction;
- (i) tyres fitted to driven wheels must be of standard bitumen road type tread pattern and be available locally;
- (j) undriven wheels may be fitted with road tyres of Wintertread, Mud and Snow and similar tread patterns. Off-road tyres for cars and motorcycles and agricultural tread patterns are prohibited; and
- (k) All tyres must be approved in writing by the Observed Section Trials Sub-Committee. This approval should be obtained in writing before tyres are purchased. Tyres approved by the OST Sub-Committee shall remain approved for a period of three years from the date of initial approval, or of annual re-approval.

(xvii) **Signs on cars:**

- (a) each car may carry the name, occupation and telephone number of the driver and the name of the passenger, displayed on the sides of the car in characters no more than 100mm high.
- (b) each car may carry a name, provided that it does not advertise a sponsor, product or service.
- (c) each car may carry signs or stickers of a motoring nature.

(xviii) **Fire extinguisher:** Each car must be fitted with a securely-mounted fire extinguisher complying with Schedule H, articles 3 and 4 (refer "General Requirements for Cars and Drivers").

FURTHER INFORMATION

For further information regarding the Observed Section Trials Formula or coming events please contact any member of the Austin 7 Club OST Sub-Committee *(www.austin7club.org)*

Observed Section Trials

Diagrams

Figure 1: Minimum wheelbase

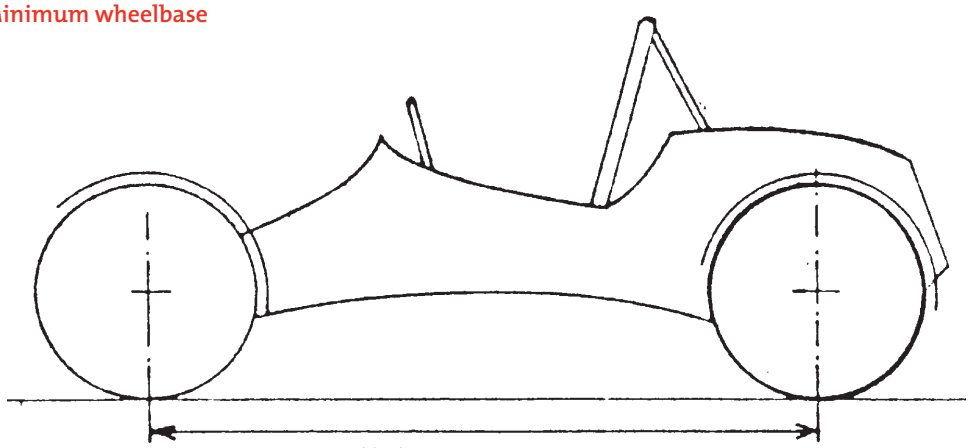

Up to 850cc: 1900mm
Over 850cc: 2030mm

Figure 2: Minimum width

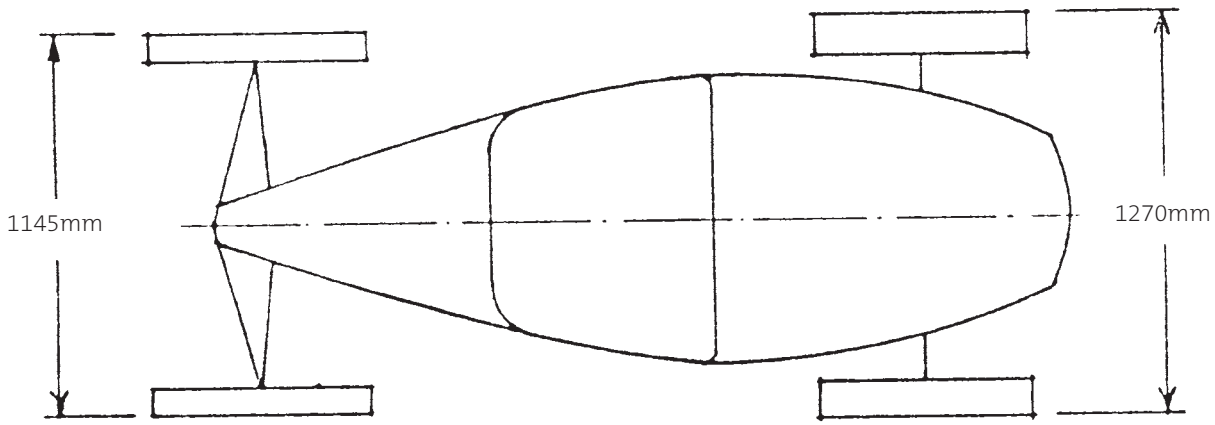

Figure 3: Engine location (front-engined cars)

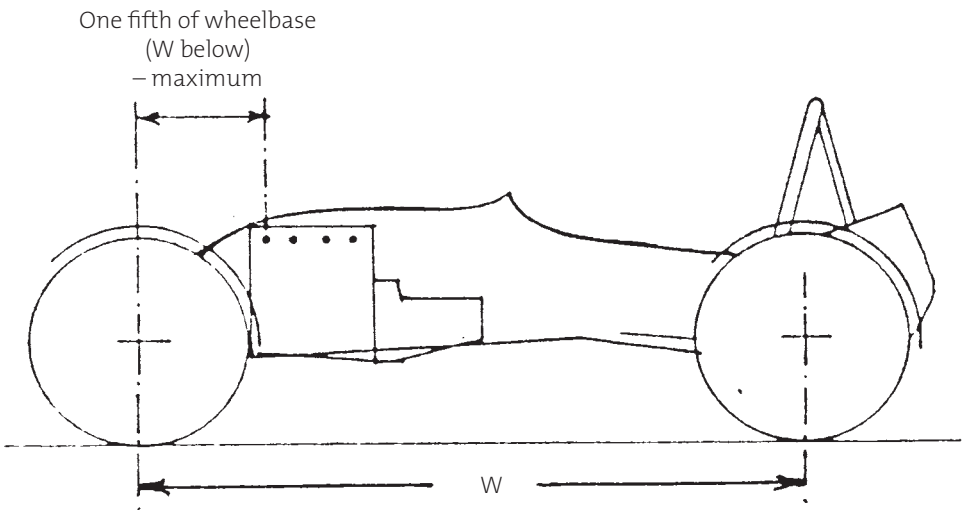

Figures 4a and 4b: Maximum overhang (rear-engined cars)

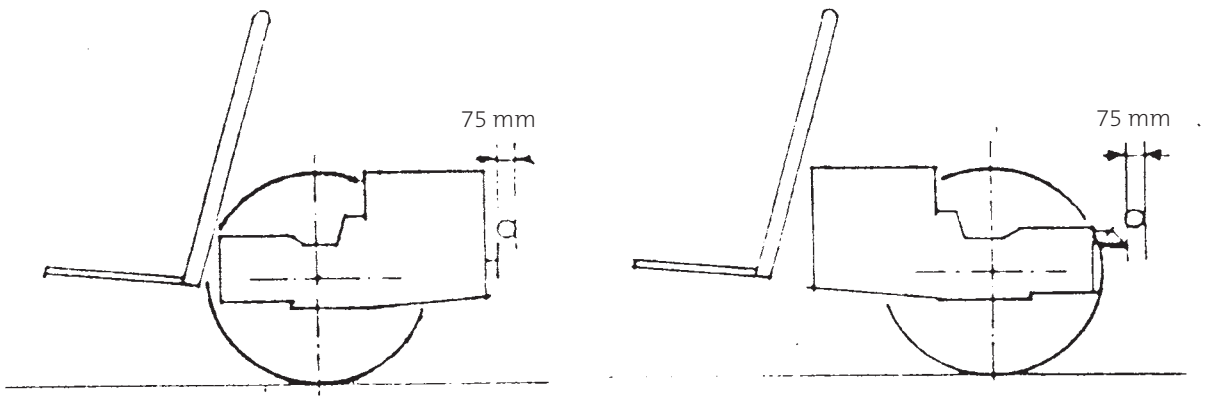

Figure 5: Rear mudguard

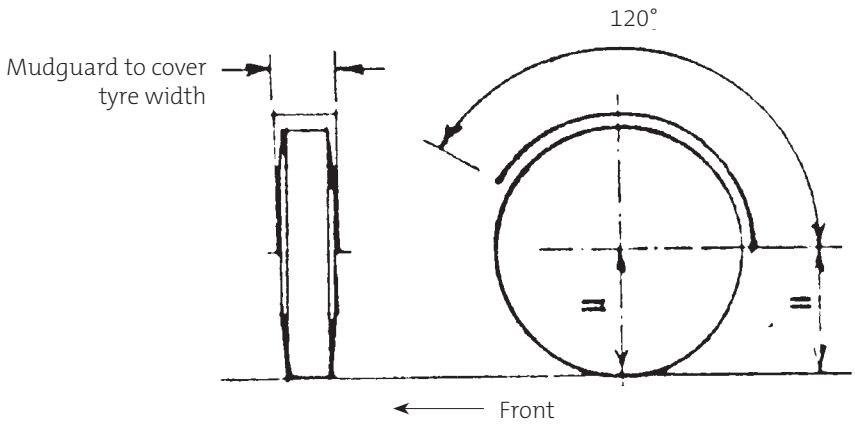

Figure 6: Engine cover

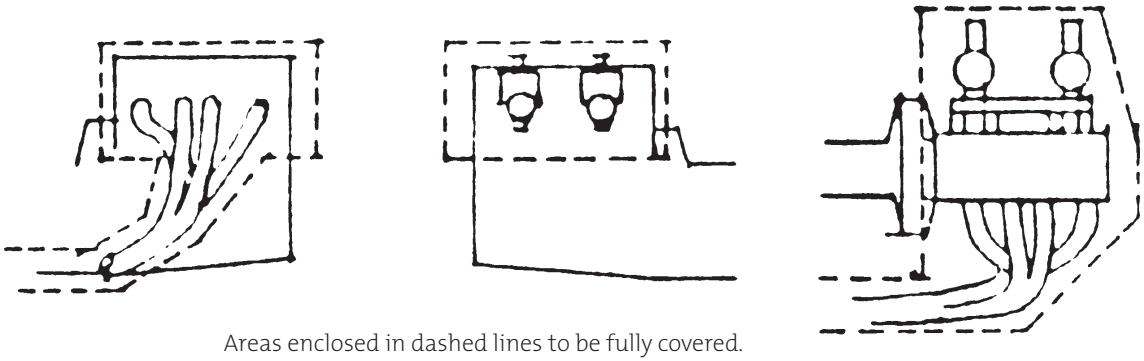

Areas enclosed in dashed lines to be fully covered.

Figure 7: Exhaust protection

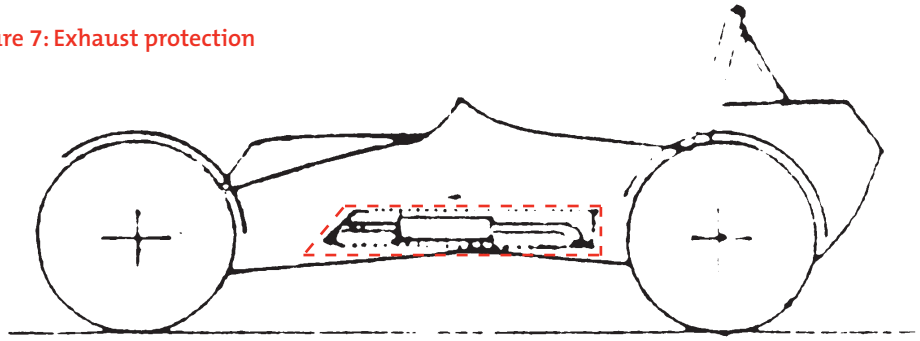
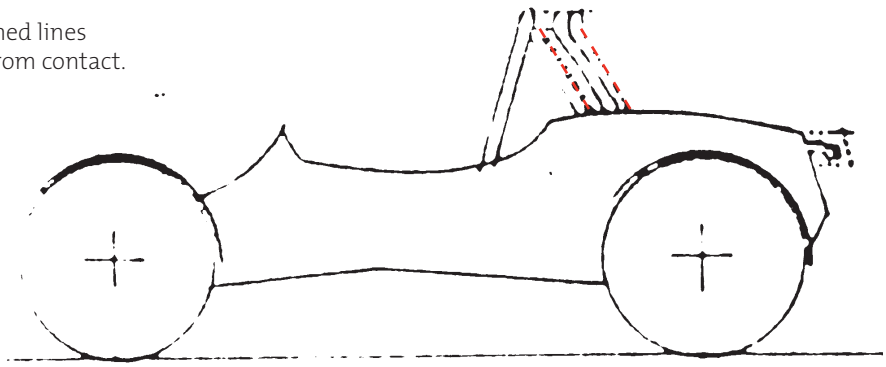
Areas enclosed in dashed lines
to be fully protected from contact.