RALLY / ROAD

Methods of Measurement of Emitted Noise

Rally Cars

1. SOUND LEVEL METER

(i) must comply with AS 37-1967;
(ii) must be used on FAST dynamic characteristic;
(iii) must be used on A weighting network;
(iv) must be calibrated at six-monthly intervals.

2. TEST SITE

(i) must be in the open air;
(ii) must be substantially level and covered with concrete, asphalt or other similar hard material providing acoustic reflection;
(iii) must consist of an area bounded by a rectangle having sides at least 3m from the outline of the vehicle under test;
(iv) must contain no objects other than the vehicle and the sound level meter operator.

3. MICROPHONE POSITION

(i) must be equal to the height of the geometric centre of the orifice of the exhaust outlet, but not less than 200mm above the ground;
(ii) must be located 525mm (±25mm) from the geometric centre of the orifice at the exhaust outlet;
(iii) must be at an angle of 45° (±10°) from the direction of travel of the vehicle at the side nearest the orifice of the exhaust outlet;
(Note: the 45° should be selected so as to achieve the greatest distance between the microphone and the vehicle.)
(iv) for vehicles fitted with two or more exhaust outlets spaced more than 300mm apart or connected to separate silencers, each exhaust outlet shall be treated separately as if it were the only one.

4. MEASUREMENT METHOD

At normal operating temperature the engine shall be brought to:

4000 RPM for four-cylinder engines
3500 RPM for six-cylinder engines
3000 RPM for eight-cylinder engines
5000 RPM for rotary engines

as determined by the tachometer and stabilised at those limits for a sufficiently long period of time to allow a noise level measurement to be made.

© Confederation of Australian Motor Sport Ltd. All use subject to Conditions of Use at *www.camsmanual.com.au*

RALLY / ROAD

Rally Car Eligibility

Valid until 31 December, 2009

The following schedule specifies which categories and classes of vehicles may be used in different Australian rallies:

NATIONAL LEVEL EVENTS

FIA Group N which are either currently homologated, or for which the homologation expired less than four years ago	Production Rally Cars (PRC)
FIA Super 2000 *	Group N(P) rally cars
FIA Group R	Showroom Rally Cars
FIA Super 1600	Historic and Classic rally cars

** or as recognised by the Australian Rally Commission*

STATE LEVEL EVENTS

As for National level events**
Road-registered 4WD automobiles that comply with (i) the CAMS Off Road Production 4WD category regulations, or (ii) the regulations relating to Groups A0, A1 or A2 of the Cross Country Rally Technical Regulations (not eligible for State Championship points).

*** The eligibility of Classic Rally Cars for State Championships is subject to State Council approval.*

CLUB AND MULTI-CLUB LEVEL EVENTS

(i)	Events which are part of CAMS-recognised series and/or have any awards other than trophies:	as for State level events
(ii)	Events which are not part of a CAMS-recognised series and/or do not have awards other than trophies:	any vehicle which is road registered and complies with Schedule R – General Requirements for All Rally Cars

TARMAC SPECIAL STAGE AND TARGA RALLIES*

Automobiles comply with the Tarmac Rally Technical Regulations
FIA Group N
Historic and Classic Rally Cars
Production Rally Cars (PRC)

**Non-ARC*

Event organisers, State Rally Advisory Panels and/or State Councils may make application to ARCom for specific dispensations.

Manufacturers wishing to enter rallies are required to seek authorisation from the Australian Rally Commission.

POLICY – RECOGNITION OF MODEL

For each CAMS rally car group, provided a car is presented in the correct specification for the model which has been entered in respect of any mechanical or cosmetic items required to be retained for that model under the relevant regulations (eg. engine, bumpers, lights, grill, dashboard), it shall be eligible to compete.

This may permit a car to be presented in a different specification to the one the manufacturer first produced for that particular bodyshell/chassis.

© Confederation of Australian Motor Sport Ltd. All use subject to Conditions of Use at *www.camsmanual.com.au*

RALLY / ROAD

Turbocharger Sealing Requirements

1. For all turbocharged Group N and Group N (P) 4WD vehicles , whose homologated turbocharger inlet size is 32mm or greater (22.6mm for vehicles fitted with two or more turbochargers), and for all turbocharged Production Rally Cars (PRC), whose turbocharger inlet size is greater than 34mm (24mm for vehicles fitted with two or more turbo-chargers), it will be compulsory to have a restrictor fitted in accordance with FIA Group N Regulations, Article 6, save that the size of the restrictor for PRC will be 34mm (24mm for vehicles fitted with two or more turbochargers).
2. These Regulations do not apply to two-wheel drive turbocharged vehicles. However, competitors with 2WD turbocharged vehicles must attend turbo scrutiny and must be checked for inlet size against the homologation papers and have the compressor housing sealed to the bearing housing. For those competitors with non-homologated 2WD turbo vehicles, components must be identical to the series part.
3. The turbocharger restrictor will be measured and sealed in place prior to competition in any round of the Championship. All turbochargers used on these cars during the event will be required to be measured and sealed prior to their use.
4. Competitors must present turbochargers to the organisers in a condition to be sealed, ie, they must be wired and prepared for sealing with leadseals or a CAMS-approved alternative in a manner that will be easily seen when assembled on the car.

   The restrictor must be sealed to the compressor housing, which in turn must be sealed to the bearing housing which in turn must be sealed to the exhaust housing. This can usually be effected by one wire and therefore one seal. The diagrams below may assist.

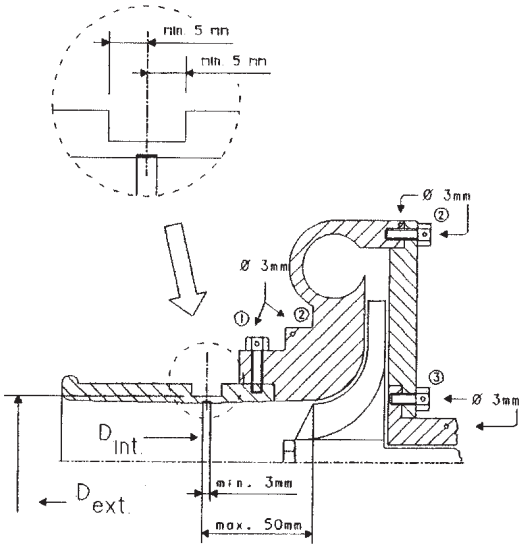

Diagram 254-4

① hole for restrictor or restrictor/compressor housing

② hole for compressor housing or housing/flange

③ hole for central housing or housing/flange

Other possibilities

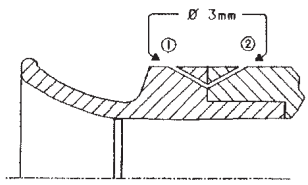

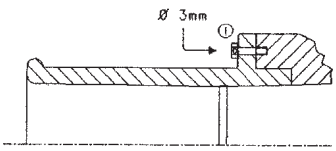

© Confederation of Australian Motor Sport Ltd. All use subject to Conditions of Use at *www.camsmanual.com.au*

RALLY / ROAD

Scrutineering – Road Events

Before participation in any Rally, cars will be examined by scrutineers, and the following items will be checked.

- ❑ Licences:
  - ❑ Competitor
  - ❑ Driver
  - ❑ Navigator/Co-driver
- ❑ Front number plate
- ❑ Bumper bar
- ❑ Parking lamps
- ❑ Head lamps:
  - ❑ high
  - ❑ low
- ❑ Additional lamps:
  - ❑ mounting & switching
  - ❑ lampguards (safe & secure)
  - ❑ front turn indicators
  - ❑ bonnet secure
- ❑ Tail lamps
- ❑ Number plate lamp
- ❑ Brake lamps
- ❑ Reversing lamp:
  - ❑ mounting
  - ❑ panel indicator
- ❑ Rear turn indicators
- ❑ Reflectors
- ❑ Rear number plate
- ❑ Boot secure
- ❑ Bumper bar
- ❑ Mud flaps
- ❑ No excess body damage
- ❑ Doors secure
- ❑ Signs & numbers
- ❑ Battery safe
- ❑ No fluid leaks
- ❑ Master cylinder & fluid level
- ❑ Tow Rope – Shovel – Axe (not compulsory)
- ❑ Steering components
- ❑ Fuel tank/s vented
- ❑ Brake hose condition & leaks
- ❑ Brakes (pedal height & feel)
- ❑ Hand brake
- ❑ Windscreen vision
- ❑ Windscreen wipers
- ❑ Windscreen washers
- ❑ Rear vision mirror
- ❑ Steering wheel & play in steering mechanism
- ❑ Seats & safety belts
- ❑ Interior (safe)
- ❑ Horn
- ❑ Roll bar & padding
- ❑ Wiring
- ❑ Helmets (if applicable)
- ❑ Fire extinguisher
- ❑ First aid kit
- ❑ Triangles
- ❑ Wheel bearings
- ❑ Front suspension
- ❑ Ball joints
- ❑ Shock absorbers
- ❑ Springs or torsion bars
- ❑ Rear suspension
- ❑ Springs, bolts
- ❑ Shock absorbers
- ❑ Universal joints
- ❑ Chassis/sub-frames
- ❑ Sump guard/tank guard (if fitted)
- ❑ Wheels – condition
- ❑ Tyres
- ❑ Exhaust system:
  - ❑ mounting
  - ❑ no leaks
  - ❑ noise level

© Confederation of Australian Motor Sport Ltd. All use subject to Conditions of Use at *www.camsmanual.com.au*