SPECIFICATIONS OF AUTOMOBILES

All vehicles in races and other speed events must comply with the General Requirements of Automobiles (see "General Requirements for Cars and Drivers" in the CAMS Manual of Motor Sport).

3rd Category – Touring Cars
Group 3J – Improved Production Cars

National Association

Improved Production Racing
Association of Australia

National Administrator

Mr Paul Foster
55 Edgar Street, Glen Iris Vic 3146
Tel: (03) 9824 5147 (Priv)

PREAMBLE

Improved Production has been adopted by CAMS as a sporting level touring car category. CAMS is ultimately responsible for the approval of the regulations or changes thereto, and responsible for publishing the regulations via the CAMS Manual and associated Bulletins as necessary. The Improved Production Racing Association of Australia IPRA) is recognised by CAMS as the sole entity representing competitors in this category. The IPRA is the category representative group which is made up of a representative from each of the CAMS and IPRA-affiliated Improved Production state associations.

The IPRA is recognised by CAMS as the sole entity which may make recommendations regarding maintenance of and/or proposed changes to technical regulations for this category and/or sporting regulations for the conduct of competition activity for such vehicles.

CAMS will consult with the IPRA exclusively regarding the maintenance and/or proposed changes to the technical and sporting regulations.

The IPRA will be responsible for consultation processes within its membership and with other interested parties as may be appropriate from time to time.

Vehicles shall conform with the General Requirements of Automobiles as laid down in "General Requirements for Cars and Drivers" in the CAMS Manual of Motor Sport and these regulations.

I. DEFINITIONS

1.1 **Improved Production Car:** A race vehicle derived from a registered production automobile, with limited modifications to improve performance and reliability in speed events on circuits or closed courses.

To be eligible, the models of vehicles must be or have been mass-produced touring cars, the model of which has been:

(i) homologated by the FIA in Group A. Sporting Evolutions (ES) and Variant Options (VO) shown in the FIA homologation papers shall not be eligible unless provided for in 1.1(ii) or 1.1(iii) below; or

(ii) commercially available to the general public in Australia as new cars through a manufacturer's dealer network. At least 200 such models must have been registered for road use in Australia; or

(iii) otherwise recognised by CAMS, at its sole discretion, for Group 3J. In general, such cars will be available on a large scale as an imported used car. Prospective competitors desiring to use such cars must provide information regarding the number registered for road use in Australia, and a basic recognition document containing all such technical details, photographs and other specifications as may be required by CAMS. The CAMS Recognition Committee shall make recommendations to the AMRC who will be the final arbiter of acceptance or otherwise of any model.

List of Approved Models

1. Mitsubishi Mirage Cyborg
2. Nissan Silvia S 13 (turbo and naturally-aspirated)
3. Nissan Skyline R32 (GTS, GTS4, GTS-T, all either 2-door or 4-door body)

© Confederation of Australian Motor Sport Ltd. All use subject to Conditions of Use at *www.camsmanual.com.au*

4. Nissan Skyline R33 (GTS, GTS4, GTS-T, all either 2-door or 4-door body)
5. Nissan Skyline R33 (GTR, 2-door)
6. Nissan Skyline R34 (GTS, GTS4, GTS-T, all either 2-door or 4-door body)
7. Nissan Skyline R34 (GTR, 2-door)

(iv) **Late model vehicle:** Any Improved Production race car being of a model of car not manufactured prior to 1 January 1986, and first issued with a log book after 1 January 2004 must be run as a Late Model Car as defined in Article 1.15.

1.2 Coachwork: All entirely sprung parts of the car in contact with the external air stream, except the parts definitely associated with the mechanical functions of the engine, transmission and running gear.

1.3 Wheel: This means the complete wheel: flange, rim and tyre and any additional fittings.

1.4 Automobile make and model: Vehicles manufactured by the same company but under a different brand name are considered to be the same make, eg, Nissan/Datsun, Mazda/Eunos, Toyota/Lexus etc. Any component fitted to a production vehicle will be regarded as belonging to that manufacturer of that vehicle irrespective of the actual source of manufacture.

Manufacturers are not considered to be the same solely by virtue of having a common parent or holding company. Model refers to a member of the same family of vehicle as produced by the manufacturer.

1.5 Engine capacity: The Swept Volume shall be the volume swept by the movement of the pistons/rotors in one revolution of the crankshaft. The Effective Capacity shall be the product of the Swept Volume and an equivalence factor dependent on the engine configuration. This volume shall be expressed in cubic centimetres. The equivalence factors shall be:

Piston engine - normally-aspirated	1.00
Piston engine - supercharged	1.70
Rotary engine - normally-aspirated	1.80
Rotary engine - supercharged	3.06

1.6 Traction control: Traction control is defined as any form of program, device, system or mechanism for the purpose or effect of preventing or limiting loss of traction. The direct control of the throttle position or brakes as effected by the driver does not fall within this definition.

1.7 Automatic transmission: Automatic transmissions are defined as being transmissions that use a fluid coupling instead of a friction plate clutch system.

1.8 Elastomeric bushings: Suspension components utilising an elastomer (eg, rubber, polyurethane) to permit freedom of movement in three axes at suspension pivot points. Where the bush incorporates an outer metal shell and/or central crush tube, they shall be regarded as part of the bushing. Where the bushing is integral with the arm or other secondary component, only the elastomer material shall be regarded as the bushing for replacement purposes.

1.9 Rotary engine: Engines with rotary (rather than reciprocating) motion of the compressing medium (Wankel-type). A rotary engine is defined as the rotor housings, intermediate and end plates.

1.10 Peripheral port: A port on a Rotary Engine allowing the passage of gasses though the periphery of the rotor housing. Any bridged induction port in the end or intermediate plates of a rotary engine that is extended radially beyond the original outer edge of the inner water seal is, for the purposes of these regulations, considered to be a peripheral port.

1.11 Decorative strips: Any parts following the external contour of the bodywork and less than 100mm high, the function of which is to prevent minor body damage or is decorative. Badges describing the vehicle manufacturer and/or model are considered to be within this definition.

1.12 Telemetry: The transmission of data from a moving car. A timing transponder required by regulation shall not be regarded as telemetry.

1.13 Minor reshaping: Reshaping of existing material. This excludes the addition, replacement or removal of material and must not result in a loss of integrity of the panel.

1.14 Free: A component, deemed to be free under these regulations may, where fitted to the vehicle as standard, be removed or replaced. Where the removed component is replaced, the replacement is not restricted in design or material (unless otherwise specified) providing it performs only the same function. No modification may be made to surrounding components or body-work to which the replacement is fitted, unless otherwise permitted. Where freedom is granted for the fitment of any component, such freedom is restricted to that component and such modifications as are allowed in Article 3.17. For the purpose of this article, a component shall be deemed to include all other components with which it is integral, or to which it is attached by means the manufacturer intended to be permanent. Where a system is deemed as free, all components solely associated with that system are regarded as free, as per above.

1.15 Late model vehicle: A car of a model manufactured after 1/1/86, and complying with Articles 17.2 - 17.6.

1.16 Hatchback: Any vehicle on which the rear window is attached to a rear facing door or hatch.

© Confederation of Australian Motor Sport Ltd. All use subject to Conditions of Use at *www.camsmanual.com.au*

2. REGULATIONS

2.1 Role of CAMS: The following technical regulations for 3J Improved Production Cars are issued by CAMS and must be read in conjunction with the relevant Schedules of "General Requirements for Cars and Drivers" in the CAMS Manual of Motor Sport.

2.2 Publication date for amendments: Each year in January at the latest, CAMS will publish all changes made to these regulations in the CAMS Manual of Motor Sport. Changes made for safety may come into force without notice. Rule changes are effected by a ballot of all registered members of the Improved Production Car Racing Association of Australia and a two-thirds majority is required to effect a change. CAMS reserve the right to alter regulations at its discretion.

2.3 Permanent compliance with regulations: Automobiles must comply with these regulations in their entirety at all times during an event, save through any damage or malfunction sustained in competition.

2.4 Log book/Eligibility: The Competitor is responsible for furnishing any documentation to prove the eligibility of any part used or modification performed otherwise outside of these regulations.

2.5 The entire vehicle must remain unmodified except for specific freedoms allowed in these regulations and modifications necessary to comply with "General Requirements for Cars and Drivers".

3. BODYWORK AND DIMENSIONS

3.1 Strengthening: It is permitted to seam weld the bodyshell. Metal to a thickness of up to 5mm may be added to fully sprung components to a distance of 75mm from the edge of each suspension pivot point aperture. Such metal must follow the contour of the original metal at all times. It is not permitted to add or incorporate any other components which contribute to the rigidity of the bodyshell, other than the roll over protection structure as described in Article 14.1, and a strut tower brace as described in article 9.7.

3.2 Transmission tunnel: Minor reshaping of the body is permitted to enable fitment of replacement gearboxes and clutch assemblies.

3.3 Gearshift hole: It is permissible to cut or enlarge a hole in the floor, of the minimum necessary dimensions, for the gearshift and associated mechanism. At all times, there must be some form of covering around the gearshift to prevent the ingress of material into the cockpit.

3.4 Wheel arch flares: It is permitted to add wheelarch flares, provided that the increase in the total width of the coachwork is less than 100mm, as measured above the corresponding wheel centrelines. No part of the flare is permitted to extend further than 200mm from the original wheelarch opening. The operation of any door must not be affected.

3.5 Tyre clearance: For the purpose of wheel and tyre clearance, minor reshaping of impinging bodywork is permitted. Where a wheelarch flare is fitted in accordance with article 3.4, it is permitted to remove up to 75mm of original bodywork measured radially from the edge of the wheel arch outwards. A maximum of 10mm of the cut edge may be reformed into a folded-over beading. Any cavity exposed in a door or rear wheel arch through the removal of metal must be covered by the addition of a metal closing panel. Any body joint protrusions must be rendered safe. The operation of any door must not be affected.

3.6 Front spoilers/air dams: It is permitted to fit an airdam to the front of the car, subject to the following restrictions (see diagram 1).

Diagram 1

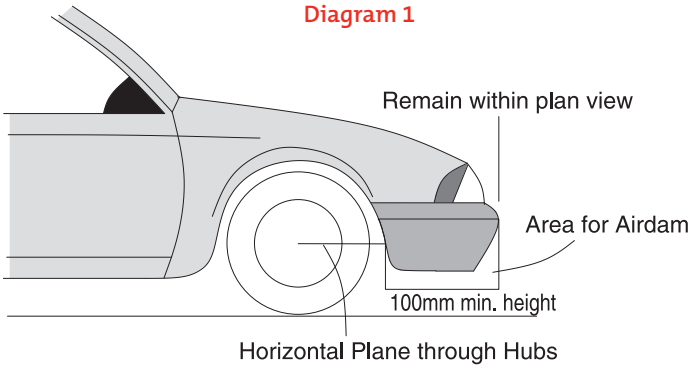

(i) it is to completely contained within the vertical projection of the original car, including permitted flares

(ii) no part below a horizontal plane passing through the centre of the wheel hubs at their extremities may extend further rearward than the wheelarch opening at the forward point where it intersects this plane

(iii) no part above a horizontal plane passing through the centre of the wheel hubs shall extend into the wheelarch opening

(iv) any undertray fitted to the airdam and located further than 50mm from the extremity of the airdam shall be flat, and parallel to the vehicle sills and shall be regarded as part of the front airdam.

3.7 Rear deck spoilers: It is permitted to fit a rear deck spoiler which complies with the following (see diagram 2).

© Confederation of Australian Motor Sport Ltd. All use subject to Conditions of Use at *www.camsmanual.com.au*

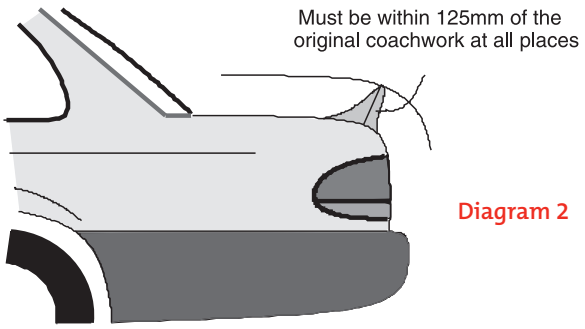

Diagram 2

(i) It was supplied as standard with the particular model of vehicle as sold in Australia **OR** it must comply with the following:

(ii) no part of it is further than 125mm from the nearest original bodywork, and it does not exceed the standard width of the bodywork excluding any flaring of the mudguards

(iii) must comply with the CAMS definition of a spoiler (as defined by CAMS Definitions - General – refer "General Requirements for Cars and Drivers")

(iv) may not extend rearwards of the rearmost extremity of the coachwork including the bumper bar

(v) must not be fitted above the rear window or on the roof

(vi) no part of the spoiler may extend any further forward than the centre line of the rear axle.

3.8 Rear deck wing: Where the particular model of vehicle as sold in Australia was supplied as standard with a rear deck wing/aerofoil (as defined by CAMS Definitions - General), a rear deck spoiler as per article 3.7 may not be fitted.

3.9 Aerodynamic aids: Any specific part of the car influencing its aerodynamic performance fitted as specified in 3.5 to 3.8 above:

(i) may not be used for any additional or alternative functions, eg, for mounting an oil radiator

(ii) must be rigidly secured to the entirely sprung part of the car (rigidly secured means not having any degree of freedom)

(iii) must remain immobile in relation to the sprung part of the car.

3.10 Vehicle embellishments: External decorative strips and mud flaps may be removed. Sump guards/splash guards may be removed or added. If sump/splash guards are added and they are in contact with the external airstream, they must be perforated with 50mm diameter holes with centres of maximum 150mm apart. No part of any additional or replacement sump/splash guard may extend to the rear of the rearmost point of the engine block or rear rotor end plate.

3.11 Registration plates: Registration plates, registration plate mountings and associated lighting components may be removed.

3.12 Sound deadener: Sound deadener (bitumen and fabric types etc) may be removed from the body shell and hung panels.

3.13 Windscreen and mirrors: The windscreen must be of laminated glass, and may incorporate defrosting equipment. External rear view mirrors may be replaced or deleted, provided that Schedule C (refer "General Requirements for Cars and Drivers") is respected at all times.

3.14 Fuel filler aperture: It is permissible to make a hole in the bodywork of minimum necessary dimensions for access to inspection plates or fuel fillers in replacement fuel tanks when fitted subject to article 5.2. Under no circumstance may the access hole exceed 300mm in any dimension.

3.15 Bonnet catches: The original bonnet fasteners and release mechanisms may be removed.

3.16 Window regulators: Where a car is fitted with electric window regulators, it is permitted to replace them with manual window regulators and, where necessary, doortrims from the same family of vehicle. Electric door lock actuators must be removed or rendered inoperative.

3.17 General: Holes may be drilled for fasteners, eg, bolts, screws, rivets etc. Holes of the minimum necessary dimension are permitted to be made for the passage of wiring and fuel, brake, oil and intercooler lines/hoses.

3.18 Timing device: It is permitted to remove the minimum amount of metal necessary to facilitate fitment of a timing transponder to the upper surface of the cockpit floor.

3.19 Brackets: Unused brackets/supports attached to the chassis/bodywork can be removed, unless they are supports for mechanical/suspension components that are not permitted to be moved or removed.

3.20 Floorpan: It is permitted to modify the floorpan in the immediate area of the driver's seat, to permit the fitment of a replacement seat. No part of the modified bodywork may extend any lower than the surrounding bodywork.

3.21 Door anti-intrusion bars: The side anti-intrusion bars may be removed from doors subject to the roll over protection structure providing lateral protection in the same general area for any occupant.

© Confederation of Australian Motor Sport Ltd. All use subject to Conditions of Use at *www.camsmanual.com.au*

4. ENGINE

4.1 General: Subject to the limitations contained in 4.2 and 4.3(iii) below, the engine and components directly associated with its function are free. The crankshaft centreline as viewed from above must be parallel to that of the original engine.

4.2 Block:

(i) The block must have the same number of cylinders/rotors and the same configuration as was standard or available as a manufacturers option for that particular model (eg, in line, horizontally opposed).

(ii) The block must be from the same manufacturer (eg, Ford, GMH, Nissan) as the original car.

(iii) The cylinder block must either be:

(iv) (a) derived from an eligible car as detailed in Regulation 1.1. **OR**

(b) derived from the same family of engines as an eligible car using identical internal dimensions (with differences only in transmission mounting pattern, minor external casting differences etc). The block type must be clearly identifiable, ie, Nissan SR20DE, SR20DET, Holden Family II, Toyota 4AG series etc. The derived block must be identifiable as being from a mass produced vehicle, not exclusively developed for sporting evolution models produced for homologation purposes in small numbers for competition use only. CAMS will be the final arbiter in determining the eligibility of a block.

(v) CAMS reserves the right to add any engine block at its discretion. Engine blocks included in this definition are: Nissan FJ20.

4.3 Rotary engines:

(i) A reciprocating engine may be interchanged with a twin rotor rotary engine from the same manufacturer in the following cars: Mazda 1200 coupe, Capella, 808, 929 (pre-1978), 121 (RWD).

(ii) A rotary engine may utilise peripheral porting but only in the following installations:

1200 coupe / R100	10A only
Capella / RX-2	12A only
808 / RX-3	10A or 12A
929 (pre-1978) / RX-4	12A or 13B
121 (RWD) / RX-5	13B only
RX-7 (series 1, 2 and 3)	12A only

(iii) The rotor housings, intermediate and end plates shall be identifiable as mass produced Mazda items. Only engines identified as 10A, 12A or 13B are permitted. Such engines must not be exclusively from sporting evolution/racing models.

4.4 Engine mounts:

(i) Engine mounts are free.

(ii) The engine mounting points on the bodyshell may be removed, modified or added to facilitate engine fitment. There must be no other alterations made to the body to fit a replacement engine except for minor reshaping of panels, other than the bonnet, for the fitment of engine mounted ancillaries and exhaust.

(iii) Engine mounting brackets bolted or welded to the crossmember may be removed, modified or added to facilitate the installation of a replacement engine. No other modifications to the crossmember may be made in order to provide clearance for the replacement engine.

(iv) It is permissible to reverse the orientation of the engine crossmember provided no alteration to the bodywork or crossmember is necessary.

(v) Where a replacement engine from another eligible model is fitted, the crossmember from the block's donor vehicle may be used provided that it is a direct bolt in replacement, and no modifications to the bodywork or replacement crossmember are required.

4.5 Supercharging: Supercharging is permitted under the following conditions

(i) If a supercharger/s is recognised as standard production for the model, and all the following conditions are met, the restricting orifice referred to in 4.5(ii) need not be fitted.

- All components associated with the induction system must remain operable, in situ, and unmodified.
- There are no additional components associated with the induction system fitted.
- Maximum inlet pressure and engine static compression ratio must remain in accordance with the manufacturer's specifications for the vehicle.
- The engines swept volume is not varied from standard by more than 2%.
- A boost monitor, as specified by CAMS, is fitted.

(ii) Where a supercharging system is not recognised for a vehicle, or where a vehicle recognised with a supercharging system does not comply with 4.5(i), a restricting orifice must be fitted to the inlet tract/s prior to the air entering the supercharging device/s so that all air used in the combustion process of the engine must pass through the orifice/s. For vehicles utilising a turbine type compressor, the restrictor must be fitted as per diagram 254.4 (see "Rally/Road" in the CAMS Manual of Motor Sport), save that the maximum internal diameter of the air intake into the compressor is 36.0mm where a single supercharging device is fitted, or 27.0mm where two devices are fitted. For other types of superchargers, the upstream extremity of the

© Confederation of Australian Motor Sport Ltd. All use subject to Conditions of Use at *www.camsmanual.com.au*

restriction must be situated a maximum of 50mm from the upstream extremity of the moving compressing media and be maintained for a distance of at least 3mm downstream. The maximum diameter of the restricting orifice/s must be complied with at all temperatures.

Multiple supercharger installations are only permitted when fitted as standard to the model concerned whereupon the original number and type of supercharging device shall be retained.

4.6 Telemetry: The use of telemetry is forbidden.

4.7 Exhaust: The complete exhaust system is free downstream of the exhaust port (save for turbosupercharged vehicles complying with 4.5(i) where the exhaust is free from the exit of the turbocharger) provided it complies with Schedule B (refer "General Requirements for Cars and Drivers"). The original exhaust mounting brackets may be removed and additional brackets may be fitted, provided that their sole function is the location of the exhaust.

5. PIPING AND FUEL TANKS

5.1 Fuel tanks:

(i) The fuel tank may be replaced by one of free but safe design; an FIA approved (FT3 specification) bladder tank is recommended. Where the standard fuel tank is retained or the replacement is not an FT3 Safety tank, it must be fitted with anti-spray foam in conformity with Schedule N (refer "General Requirements for Cars and Drivers").

(ii) It must be mounted in the same general location.

(iii) For vehicles which are manufactured with the fuel tank in the cockpit, a flame and liquid-proof bulkhead must be fitted between the tank and driver.

5.2 Tank fillers: The position of the tank filler is free, subject to Article 3.14. Dry break fittings are permitted. Tank fillers must not protrude beyond the bodywork and must be effected in such a way that no fuel spilt in the filling process will leak into the interior compartments of the car. If the filler hole is situated inside the car, it must be separated from the cockpit by a liquid tight bulkhead. Where retained, the standard filler orifice may be modified to accept a replacement cap of free design. Tank fillers must be designed to ensure an efficient closing action which reduces the risk of accidental opening following a crash impact.

5.3 Fuel pumps/filters: Fuel pumps, fittings, fuel lines and filters are free. Where the fuel lines pass through the cockpit, there must be no connections within the cockpit save at the front and rear bulkheads.

6. COOLING/OIL SYSTEM

6.1 Radiator: The radiator is free providing that the only body modification required for fitment is the drilling of holes for mounting purposes.

6.2 Radiator cowl/shroud: Radiator cowls/shrouds on the rear of the radiator for the purpose of sealing a fan may be removed. Radiator cowls in front of the radiator must be retained in their entirety. It is permitted to add additional shrouds or ducting.

6.3 Engine cooling fans: Engine cooling fans are free.

6.4 Oil coolers: Oil coolers are free subject to Regulation 3.9.

6.5 Inlet charge air cooling: Devices for the cooling of the inlet air in Supercharged systems in accordance with Article 4.5(ii) are permitted.

7. STARTING

7.1 Starter: A starter must be fitted and be able to be controlled by the driver when seated normally. The starting system must be capable of starting the engine at all times.

7.2 Starting the engine: A supplementary battery temporarily connected to the car may be used while starting the engine in the pits and on the dummy grid.

8. TRANSMISSION TO THE WHEELS

8.1 Gear selection: For all vehicles with other than automatic transmissions, all gears must be selected by the driver exclusively via a non-sequential mechanical linkage. This permits "H" pattern gear change mechanisms only.

8.2 Gearbox/transaxle: The gearbox or transaxle may be replaced by one of free design incorporating no more than five forward gears, subject to 8.1 above. It must incorporate an operable reverse gear and remain in the same general location as the original. The gearbox crossmember and mounting points are free. Any additional lubricant cooling device, including a fan is permitted. The circulating pump, radiator, and air intake may not be located in the cockpit. Drive must be taken only to those wheels as envisaged by the manufacturer.

8.3 Clutch: The clutch must be operated by pedal action with the method of operation otherwise free. The position of any master cylinder for hydraulic operation is free. The complete clutch assembly, flywheel and bellhousing are free.

8.4 Rear axle/differential for RWD vehicles:

- Live axles: The original configuration and type of all suspension pivot points on the assembly must be retained, save for lateral location as per article 9.10. The rear axle assembly is otherwise free. Fully floating hubs are encouraged.
- Independent rear suspension: The final drive assembly may be modified or replaced by one of free design provided the original methods of attachment and location are retained.

8.5 Tailshaft/driveshafts/axles: The tailshaft/driveshafts/ axles and associated universal or CV-joints are free.

8.6 Traction control: The use of traction control is forbidden.

© Confederation of Australian Motor Sport Ltd. All use subject to Conditions of Use at *www.camsmanual.com.au*

9. SUSPENSION AND STEERING

9.1 Springs: Springs are free provided that the type and location are unchanged (by type is meant: coil, torsion bar, leaf etc.)

9.2 Bump stops: Bump stops, being the components designed to ultimately limit the suspension travel, are free and may be repositioned.

9.3 Bushes: Elastomeric bushes used at suspension pivot points (which are not otherwise specified in these regulations) may be replaced by other elastomeric bushings.

9.4 Suspension dampers: The make and size of suspension dampers are free. The number of dampers and pivot point locations may not be altered.

9.5 Front suspension components: Steering tie rods may be replaced provided they are derived from an eligible vehicle. Stub axles, steering arms, hubs, bearings and tie rod ends are free. MacPherson strut tubes are free. In cases where the steering arms are separate components, it is permitted to fit spacers between the steering arm and stub axle assembly using extended bolts.

9.6 MacPherson strut top mounts: MacPherson strut top mounts are free providing that they utilise the standard bodyshell mounting facilities.

9.7 Strut tower brace: A brace of free design may be fitted between the front suspension towers providing it only links the towers.

9.8 Sway bars: Sway bars, their pivot points and associated linkages are free. On strut type suspensions where the sway bar acts as a control arm it is permitted to change the thickness of the bar only. The inclusion of spacers at the sway bar mounting points is permitted, but only by extending bolts in the original body mounts.

9.9 Ride height adjustment: Adjustable spring platforms, rear leaf spring shackles, spacers located directly at either end or between coil springs, lowering blocks of solid/rigid material and torsion bar ride height adjusters are all free.

9.10 Rear suspension components: Devices for the lateral location of the rear wheels on vehicles with a live axle, and any associated brackets on the body, are free. Brackets may be welded to the body. All other components which have any function in the location of the rear wheels must be retained unmodified except for bushings, which must comply with 9.3 above. Drive flanges, trunnions, hubs, stub axles and wheel bearings are free. It is permissible to add additional longitudinal rear suspension arms provided that all bushings are elastomeric and that the mounting points on the body only involve the addition of metal, save for a single hole per arm of maximum diameter 25mm.

9.11 Wheel track: The track dimension is free save that the upper part of the tyre, down to the flange over the wheel hub centre must be within the perimeter of the vehicle when viewed vertically from above (see diagram 3).

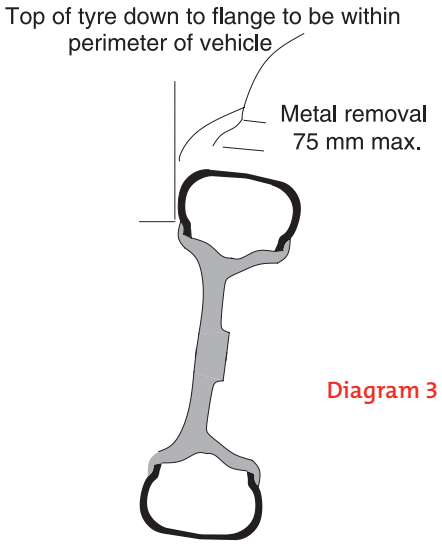

Diagram 3

9.12 Ride height: All fully sprung parts of the car, with the exception of the entire exhaust system, must be at least 100mm above the ground when measured on a flat level surface with the vehicle at Minimum Weight.

9.13 Steering: It is permitted to alter the steering ratio by the replacement of internal components within the steering rack assembly or box. A power steering rack assembly or box may be interchanged with a manual steering rack assembly or box respectively provided that the original mounting points on the body or crossmember are used, the replacement rack assembly or box is an unmodified part from an eligible vehicle and no other modifications (eg, steering column etc) are needed. Where a manufacturer offers both systems as options for other variants of the same family of vehicle, either system, and any associated crossmember may be used. All other components of the power steering system are free.

9.14 Wheel alignment facilities: The wheel alignment settings are free. It is permitted to relocate the front control arm pivot point radially by up to 45mm within the confines of the existing crossmember or body panels. No metal may be removed save that directly associated with the actual pivot point relocation. For vehicles with a live rear axle, where camber or toe vary by more than 1/2 ° from standard, the toe and camber

© Confederation of Australian Motor Sport Ltd. All use subject to Conditions of Use at *www.camsmanual.com.au*

figures are to be recorded in the vehicle logbook, and such settings shall be used exclusively in all competition. These specifications, once recorded, may only be varied upon approval by CAMS Manager - Technical Services. Rear wheel alignment on independent suspensions may be achieved by relocating suspension pivot points by no more than 20mm within the existing brackets.

10. BRAKES

10.1 Brake controls: Brakes must be controlled by a double circuit hydraulic system so arranged that the pedal normally operates on the four road wheels. In the event of fluid leakage at any point in the system, the pedal shall still control two wheels on the same axle, or on diagonally opposite wheels if produced in this format by the vehicle manufacturer. For the purpose of adjusting brake bias, it is permissible to change from a diagonal split system, to a front/rear split system. It is permissible to add a facility to allow for the adjustment of the front/rear brake bias from the cockpit.

10.2 Master cylinders: Power boosters, master cylinders and associated pushrods, fluid lines and hoses are free. The position of replacement master cylinders is free and holes of the minimum necessary dimensions may be made in existing panels to facilitate such fitment. Brake proportioning valves are free.

10.3 Brake rotors: Brake rotating friction surfaces must be made from a ferrous material but are otherwise free. Disc mounting hats are free subject to their being made from aluminium alloy or ferrous material.

10.4 Brake callipers: Brake callipers and pads are free, subject to the main housing being made of a ferrous material or an aluminium alloy. Where freedom is not otherwise granted, suspension components may be modified to permit fitment of replacement callipers.

10.5 Handbrake: Handbrakes are free.

10.6 Brake cooling: Protection shields/stone guards on unsprung components may be added or removed. It is permitted to fit ducting for the passage of air to the brakes provided that it remains within the perimeter of the coachwork when viewed from above and that no bodywork alterations are required.

11. WHEELS AND TYRES

11.1 Wheels: Wheels are free subject to the following restrictions.

The maximum rim width is 8" for each Late Model automobile with an effective capacity up to and including 3000cc, and is 7" for each other automobile with an effective capacity up to and including 3000cc. The maximum rim width is 9" for each Late Model automobile with an effective capacity greater than 3000cc, and 8" for each other automobile with an effective capacity greater than 3000cc.

Other than for Late Model Automobiles, the maximum wheel diameter for an automobile fitted with a piston engine of 6 or more cylinders is 16"; and the maximum wheel diameter for automobiles fitted with any other type of engine is 15". The spare wheel, jack and any associated brackets may be removed.

11.2 Tyres: Each tyre must:

(i) for all circuit races and associated practice and qualifying, be Yokohama A032R or Yokohama A048R. Each tyre shall be purchased from the Australian Yokohama Motorsport Distributor Network.

(ii) for speed events other than races be of a type included on the current CAMS Production Car Tyre list.

(iii) have at least a minimum tread depth. The tread wear indicators as provided by the tyre manufacturer will be the definitive method of determining minimum tread depth. At no time prior to practice or racing may any tread wear indicator be exposed or in the case where the indicator is a dimple in the tyre, worn below such indicator. This does not apply to the shoulder of the tyre. In all areas where there is no tread wear indicator, the original tread pattern must be clearly visible.

(iv) have a minimum aspect ratio of 50%.

(v) be fitted onto a rim in compliance with Schedule E (refer "General Requirements for Cars and Drivers").

12. ELECTRICAL

12.1 Electrical system: The wiring and electrical connectors, switches, fuses and circuit breakers, starting, ignition and generating systems are free. A panel incorporating additional/ replacement switches and/or circuit breakers may be added. The starting, lighting and turn signalling apparatus must be in working order at the start of each competition. All globes must at least meet the original equipment specification.

12.2 Battery: The battery and its location are free but it must be safely and securely mounted. It must be adequately covered so as to prevent short circuits and leakage, in any position.

12.3 Windscreen wipers: The windscreen wiper mechanism may not be modified with the exception of the tensioning springs and wiper blades. Wind deflectors may be added. Headlight and rear window wipers and washers may be removed. The windscreen washer bottle, pump and hoses and any mounting bracket are free. Windscreen wipers must rest in the same location as on a standard car of that make and model.

12.4 Each head light and tail light assembly may be replaced by a non-genuine item provided that the replacement assembly is legal for road use and is from a widely-distributed catalogue.

13. COCKPIT/DRIVER'S COMPARTMENT

13.1 Steering wheel: The steering wheel may be replaced by one which is of at least 300mm diameter. It is permitted to add a steering wheel boss, possibly incorporating a quick release mechanism, to enable the fitment of a permissible steering wheel. The steering column may be lowered by the addition of spacers/ longer bolts at the rear mounting points provided no other modifications are required.

13.2 Controls: All driving controls must retain the role laid down for them by the manufacturer. Footrests and heat protection panels may be added to the driver's footwell cavity. Pedals and pedal boxes are free, but the

© Confederation of Australian Motor Sport Ltd. All use subject to Conditions of Use at *www.camsmanual.com.au*

radial location of the of the pedal axes must remain within 75mm of the original.

13.3 Instruments: Instruments are free, but the original dash must remain. Any holes in the dash resulting from the removal of instruments must be neatly closed by the addition of a closing panel. Where possible, all replacement instruments must be mounted in the dash where the original instruments were situated.

13.4 Carpet and interior trim: Floor carpet and associated "underfelt", roof lining and interior trim down to the lower edge of the windows, and consoles on the transmission tunnel may be removed. All other padding, quilting and interior trim must be retained as original. It is permitted to reupholster components of interior trim.

13.5 Seats: The driver's seat may be replaced with one in compliance with Schedule C (refer "General Requirements for Cars and Drivers"). Original seat mountings not part of the bodyshell may be replaced and/or other mountings added provided that they extend no further than 50mm from the plan view of the seat. All other seats, and associated seat belts are free.

13.6 Removable rear window shelf: The removable rear window shelf in two volume cars may be removed together with its supports, or held down by additional fasteners.

13.7 Heater: All components solely associated with the heating, air-conditioning and ventilation system are free. Any openings created by the removal of ducting, vents and controls from the dash must be closed by the addition of panels, which may be used to mount additional instruments or controls.

13.8 Accessories: The radio, aerial, speakers and speaker mounts may be removed. Fog/driving lights which are separate from the main lighting system may be removed as may internal cockpit lights. Accessories which do not increase performance (eg, additional lamps, mirrors, etc) may be added.

14. SAFETY STRUCTURES

14.1 Roll over protection structures: Roll over protection structures must comply with Schedule J (refer "General Requirements for Cars and Drivers"). They must be constructed so that no parts of their structure extends outside the passenger compartment, nor penetrates any body panels except for holes drilled for attaching the cage to the vehicle. It is not permitted to fit additional bracing outside the passenger compartment, other than a strut tower brace as described in Article 9.7. It is permitted to attach parts of the safety cage to the interior of the passenger compartment, either by welding or bolting. The removal of the minimum amount of upholstery to assist the fitment of the safety cage members is permitted.

14.2 Safety harness: Where the vehicle is not registered for road use, the original driver's seat belt must be replaced by a safety harness, complying with Schedule I (refer "General Requirements for Cars and Drivers"), with at least four belts in contact with the driver.

15. FUEL

15.1 Fuel: Only fuel as defined by CAMS in Schedule G (refer "General Requirements for Cars and Drivers"), may be used.

15.2 Air: Only air may be mixed with the fuel as an oxidant.

16. CAPACITY CLASSES

16.1 Capacity classes:

0	-	1600cc
1601	-	2000cc
2001	-	3000cc
3000	-	6000cc

16.2 Capacity tolerance: Vehicle classification is based on the nominal capacity stated by the entrant on the entry form. A vehicle will remain eligible for the nominated class provided the actual capacity does not exceed the class capacity limit by more than 2%.

17. LATE MODEL

17.1 The prescriptions of Articles 17.2 – 17.6 and 18.1 – 18.6 shall apply only to vehicles which comply with the definition of a Late Model Vehicle (see Article 1.15).

17.2 Supercharging may only be used if fitted as standard equipment to the model concerned. All vehicles with supercharged engines must be fitted with a restricting orifice. This must be to the dimensions and fitting requirements as detailed in Article 4.5(ii) 4.5.2.

17.3 The provisions of articles 3.4, 3.5 and 3.7 shall not apply. For the purpose of wheel and tyre clearance minor reshaping of impinging body work is permitted provided the external appearance of the bodywork around the wheel arch is unchanged. It is permitted to remove plastic stone shields from within the wheel arch.

17.4 Fuel: In conjunction with Article 15.1, only unleaded petrol or liquid petroleum gas may be used.

17.5 Minimum racing weights: Where the engine block and/or head has been replaced by one of a different design to that fitted as standard equipment for the model concerned, the following scale of minimum weights shall apply.

continued ...

© Confederation of Australian Motor Sport Ltd. All use subject to Conditions of Use at *www.camsmanual.com.au*

For naturally-aspirated front wheel drive vehicles, based on the swept volume of the engine:

Up to 1400 cc	875kg
1401 to 1600 cc	965kg
1601 to 2000 cc	1045kg
2001 to 3000 cc	1175kg
3001 to 4000 cc	1285kg
4001 to 6000 cc	1405kg

For rear-wheel drive, add 50kg; for four-wheel drive 90kg.

In consideration of minimum racing weights, all supercharged vehicles of or above 1200cc swept volume, of actual swept volume shall be treated as having a swept capacity of 2001 to 3000cc, those below 1200cc shall be treated as 1601 to 2000cc vehicles.

18.1 The provisions of Article 11.2(iv) shall not apply.

18.2 **Safety cages:** Safety cages may have bracing to the front suspension towers as per drawing 253-11 of Schedule J (refer "General Requirements for Cars and Drivers").

18.3 A rear wing may be fitted, or replaced by one, complying with the following prescriptions. The wing, including mounting brackets and any end plates, must be single, non-adjustable, rigid element, and any longitudinal cross section must be contained within a vertical square 200mm long by 200mm high at any point on its length. The maximum difference in vertical height of the wing from its lowest point to its highest, including mounts, is 200mm. It must be within the profile of the car when viewed from above and the rear, excluding any external mirrors (see diagram 4). In the case of a hatchback, the wing may be attached to any part of the hatch. In all other cases, the wing must be attached rearwards of the rear window. The method of attachment is free.

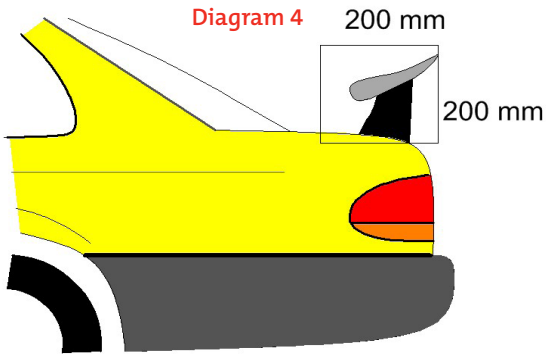

18.4 On hatchback vehicles where a rear wing is not fitted, it is permitted to fit a rear spoiler above the rear windscreen. The rear spoiler must fit entirely within the profile of the car when viewed from behind, and must not project more than 200mm from the nearest original bodywork at any point.

18.5 It is permitted to replace non-metallic front and rear bumper bar fascias. The replacement items must be identical to the originals when viewed from above and be completely contained within the perimeter of the original vehicle. The replacement items may not expose any bodywork or components that were not exposed when the original bumper bars were fitted to the car. Any undertray incorporated into the replacement front fascia must comply with the requirements of articles 3.6(ii) to 3.6(iv) inclusive.

It is permitted to add a mechanism for the quick release of the front bumper fascia. Such mechanisms must not project more than 10mm from the surrounding coachwork, and must serve no other purpose.

18.6 It is permitted to fit side skirts. Side skirts must not project more than 10mm forward of the rear edge of the front wheel arch, or 10mm rearward of the front edge of the rear wheel arch. The side skirts may not extend more than 125mm from the nearest original coachwork.

18.7 The restrictions of Article 8.2 notwithstanding, if the model of automobile was manufactured as standard with a gearbox of more than five forward ratios, the replacement gearbox may have up to six forward ratios.

© Confederation of Australian Motor Sport Ltd. All use subject to Conditions of Use at *www.camsmanual.com.au*