GENERAL REQUIREMENTS FOR CARS AND DRIVERS

Schedule K - Markings on Automobiles

1. INTRODUCTION

1.1 As required by NCR 147 and 155 the following are the requirements for Numbers, Signs, Markings and advertising on automobiles in competition.

1.2 Notwithstanding the requirements of this Schedule, CAMS shall have discretion in approving any sign not in conformity ~~therewith~~ **herewith**, provided it is deemed to be a public service and/or beneficial to the sport. ~~All~~ **Any** such variations shall be entered in the relevant vehicle log book.

1.3 The sporting regulations for a CAMS-approved championship, series, challenge etc, may make other requirements that vary, in whole or in part, the provisions of this Schedule.

1.4 In the absence of the written approval of CAMS, and with the exception where such requirement is made in an approved set of sporting regulations, no sponsor and/or organiser may make any requirement or prohibition regarding signs on vehicles which is binding on ~~entrants~~ **competitors**.

MANDATORY IDENTIFICATION

2. COMPETITION NUMBERS

2.1 Competition numbers shall be carried in such manner that in the opinion of the Clerk of the Course they are clearly visible. The location and size of competition numbers shall be in accordance with the following table:

Discipline	Application	Visibility	Front location & size	Side location & size
Racing	1st Category (Racing Cars)	Front & Sides	Nose of car Size: Figure K-1	End plates of rear wing where fitted otherwise side of cockpit* Size: Figure K-1 unless specified otherwise
	2nd Category (Open Cars)	Front & Sides	Forward of centre line of front wheels Size: Figure K-1	On front doors or between front & rear wheels if there are no doors Size: Figure K-1
	2nd Category (Closed Cars)	Front & Sides	Windscreen for all closed vehicles on the opposite side to the driver. Size: Figure K-3	Between the 'B' pillar and the trailing edge of the front wheelarch. Size: Figure K-1
	3rd Category (Touring Cars)			
	Trucks	Front & Sides		On front doors. Size: Figure K-2
	5th Category	Front & Sides	As per Racing, Sports or Touring Cars as applicable to each Historic Group, save that front numbers must be placed on the bonnet or nose of the vehicle as applicable	
	Superkarts	Superkart Technical Regulations (refer to "Race" in CAMS Manual of Motor Sport)		
Other Speed Events	All vehicles	Sides	As required by organisers	Front doors, rear windows or side of cockpit* as appropriate. Size: Figure K-2
Road	ARC	Australian Rally Championship Regulations		
	Other Events	Schedule R - General Requirements for all Rally Cars (refer to "General Requirements for Cars & Drivers" in the CAMS Manual of Motor Sport). Size: Figure K-2		
Off Road	All classes	General Requirements for Off Road Vehicles (refer to "Off Road" in the CAMS Manual of Motor Sport)		
Motor-khana	Group 4H	Sides	As required by organisers	Front doors, rear windows or side of cockpit* as appropriate. Size: Figure K-2

*** Note: Defined as a vertical surface alongside the cockpit or the most prominent position possible on the side of the car.**

© Confederation of Australian Motor Sport Ltd. All use subject to Conditions of Use at *www.camsmanual.com.au*

Figure K-1

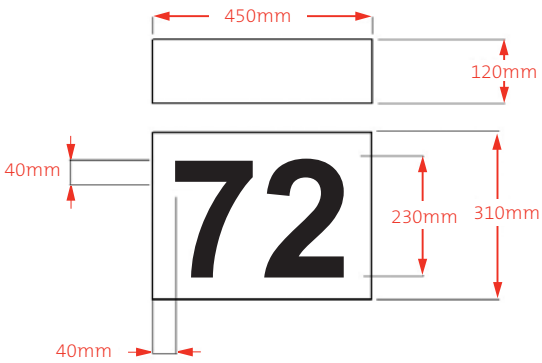

Figure K-2

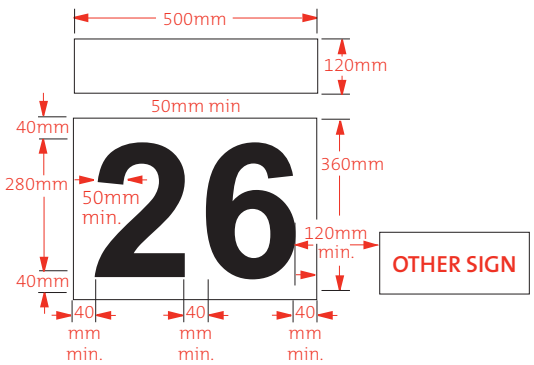

Figure K-3

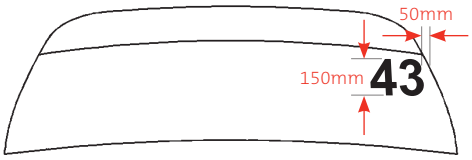

Figure K-4

2.2 Where figure K-1 applies the minimum width of the background shall be 245mm for single digit competition numbers and 450mm for two digit competition numbers. Where figure K-2 applies the minimum width of the background shall be 320mm for single digit competition numbers and 500mm for two digit competition numbers. Where competition numbers containing three digits are permissible (see Article 2.9) the minimum width of the background shall increase to 780mm.

2.3 Competition numbers in accordance with figure K-1 and figure K-2 shall be black on a white background for all races. The background for the number must be either a disc or rectangle. Where the background colour does not contrast with the colour of the coachwork the perimeter of the background shall be defined by a line the same colour as the number and a minimum of 5mm ~~thick~~ **wide**. Competition numbers in accordance with figure K-3 shall be "Dayglo" yellow with no background.

2.4 The competition number shall be of a typestyle as shown following:

1 2 3 4 5 6 7 8 9 0

Typestyles that comply with the above sample are "Helvetica Bold", "Zurich Bold" and "Arial Bold". For National Championships, or other approved series, an alternative typestyle may be specified in the Sporting Regulations whereupon such style shall be mandatory for ~~all vehicles~~ **each vehicle**.

No part of any numeral shall be closer than 40mm to any part of the adjoining numeral or to any part of the edge of the background and no part of other signs permitted hereunder shall be closer than 120mm to any

Motor Sport Graphics & Sign Specialist

AUSTRALIAN RACE SIGNS & PRINTING

Formerly:

Be Sign Yourself

16 Pokolbin St, Kearsley NSW 2325
Ph: 0412 168 295 Fax: 02 4990 8709
Email: laurie@racesigns.com.au
Web: www.racesigns.com.au

Very Competitive Prices For:
- competition numbers
- door plates
- control boards (up to FIA standard)
- large format photo printing (from A4 to A0 and larger)
- event signs (banners, corflute, etc)
- race car graphics
- drivers' names
- team clothing
- stickers & fridge magnets

© Confederation of Australian Motor Sport Ltd. All use subject to Conditions of Use at *www.camsmanual.com.au*

part of the competition number.

2.5 Competition number "1" is reserved to recognise current Australian Champion drivers in each applicable category or discipline. Where a champion driver elects not to use number "1" it shall be withheld from use for the appropriate period. ~~State~~ **Sport and Club Development** Councils may allocate number "1" for use by State Champions where such use does not conflict with a National Championship. The exclusive use of the number "1" by the current champion will not apply to rallies.

2.6 Use of number "1" other than that specified in Article 2.5 shall be at the organiser's discretion and applicable to individual events only.

2.7 Any number commencing with "0" is not permitted to be used as a competition number.

2.8 For all vehicles of the 1st and 2nd Categories and for all National championships or series, the competition number shall not contain more than two digits.

3. DRIVER NAME

3.1 In all races forming part of an Australian Championship for closed cars the surname of each driver must be displayed on the lower edge of each rearmost side window or, if this is not possible, in a suitable location as approved by the Chief Scrutineer. The letters shall be of uniform style, 100mm and 60mm, white in colour and without background, using a capital for the first letter of the name, and lower case for all other letters (see figure K-4). For grammatical correctness other letters of the surname may use a capital letter (eg, MacDonald, Holmes-Walker, O'Riordan). The typestyle shall be as required for competition numbers (see article 2.4). In all other competitions for closed cars, such display is optional, but if used, shall comply with this Regulation. For international events the national flag of the ASN of each driver and co-driver where applicable shall be displayed adjacent to the name.

3.2 Where there is insufficient space or no window to display the name/s in accordance with Article 3.1, the turret/door frame immediately above the side glass line may be used for the driver's name. In such cases the names shall be displayed in accordance with Article 3.1 save that the letters shall be displayed on a black background.

4. PC LICENCE HOLDERS

4.1 In any race automobiles driven by the holders of PC Licences for Drivers shall carry a plate carrying the capital "P" similar in size and design to those approved by Australian authorities for civil probationary or provisional drivers. In all cases this shall be red on a white background or white on a red background, mounted so that it is clearly visible from the rear of the automobile at a distance of 100m in daylight.

5. CAMS LOGO

5.1 In all competitions of State Championship and above, with the exception of those for 5th Category vehicles, the CAMS logo shall be carried on the car. For cars other than the 1st Category the logo shall be positioned adjacent to, and in a plane in line with the top of the competition number. (**Note:** self-adhesive CAMS logos are available from State offices.) Sporting regulations may specify an alternate location which shall be considered on application to CAMS.

6. MANDATORY ADVERTISING SPACE

6.1 Above or below the background of the side numbers, a surface having the same width as the background (in any case at least 450mm wide on 1st Category and Sports Cars and 500mm on other cars), and of a height of at least 120mm, shall be left free of advertising. This space shall be used at the discretion of CAMS, which may use it for advertising purposes, or which may delegate to the organisers authority to use that space. On cars on which such an area is not available due to coachwork limitations the competitors shall keep free of any advertising an equivalent surface in the immediate vicinity of the background (see figure K-1 and figure K-2).

OTHER SIGNAGE

7. USE OF WINDSCREEN & WINDOWS

7.1 It is permissible to use the opaque area around the perimeter of a windscreen or window for signage purposes when such area of windscreen or window is bonded to the coachwork. The permissible area must be as defined by the manufacturer on the surface of the windscreen or window. Such a border may not be varied from that provided by the manufacturer.

7.2 Signs or advertisements may not be placed on any windscreen, side or rear window with the exception of the following allowances:

7.2.1 Subject to articles 3.1 and 7.1 of this Schedule.

7.2.2 On the top of the windscreen on a background free as to colour and depth, subject to the lettering and devices being placed only within the upper 200mm of the windscreen surface.

7.2.3 On the rear window up to 85mm depth located at the top or bottom of the window provided that it does not interfere with the driver's visibility.

8. ARABIC NUMERALS & TRADE MARKS

8.1 Arabic numerals used as part of any sign must not, in the opinion of the Clerk of the Course, be deemed to cause any confusion with the vehicle's competition number. The Clerk of the Course at his sole discretion, may require that any signage deemed to cause such confusion be removed.

8.2 Arabic numerals may be used subject to the forgoing and the following additional requirements:

© Confederation of Australian Motor Sport Ltd. All use subject to Conditions of Use at *www.camsmanual.com.au*

8.2.1 On the sides of the car no part of the numeral shall come within 120mm of a competition number and shall be of a colour contrasting with the competition number.

8.2.2 In all instances such numerals shall be of a colour contrasting with the competition number.

9. OTHER REGULATIONS

9.1 No sign or advertisement shall be permitted to be indecent or in breach of good taste. The Clerk of the Course at any meeting shall be authorised to refer to the Stewards of the Meeting any sign which he deems to be contrary to the requirements of this paragraph and the stewards' decision thereon shall be final in respect of that meeting. See NCR 169(xi).

9.2 The lettering of all numerals and letters in all signs referred to in this Schedule and these Rules shall be carried out in a neat, regular and professional manner. The Clerk of the Course, on the advice of the Scrutineers, may recommend to the Stewards of the Meeting the re-lettering of any sign or part of a sign etc, which in their opinion fails to comply with the requirements of this paragraph. The stewards' decision thereon shall be final in respect to that meeting.

9.3 Registration labels, club badges (for CAMS-affiliated clubs) and official number plates shall not be deemed to be advertising with regard to this Schedule.

9.4 Signage retained to the vehicle structure solely by magnetic means is not permitted.

9.5 Where required, markings in accordance with Schedules A, B and C (refer to "General Requirements for Cars and Drivers" in the CAMS Manual of Motor Sport) must be provided.

10. HISTORIC CARS

10.1 In the case of Historic Cars competing under the 5th Category Regulations the following provisions shall apply:

10.1.1 The original style of paintwork and livery is encouraged.

10.1.2 The name of the driver may be shown on the vehicle, appearing once on either side in a position below the window line, in a size not larger than 40mm by 300mm.

10.1.3 A club badge, of an acceptable motoring club, ~~can~~ **may** appear on the vehicle. Each badge must be not larger than 150mm by 100mm and must be placed below the window line. Only two such badges are permitted.

10.1.4 The territory of origin of the driver may be shown on the vehicle. Each sign must be not larger than 100mm by 150mm and must be placed below the window line. Only two such signs are permitted, one on each side of the vehicle.

10.1.5 No other advertising material or sign is permitted unless evident in the applicable group period (see relevant Group regulations in 5th Category) or, upon application by a promoter, specific approval is granted by the Historic Commission to allow the display of event sponsor signage. Applications should be submitted at least three months prior to the event in question. If approved, the positioning of such signage on the various Groups of historic vehicles shall be determined by the Commission, having regard to vehicle type and historic precedent. Dimensions of any such signage must be in accordance with the restrictions set out in FIA Appendix K.

10.1.6 Competition Numbers: Competition numbers carried by 5th Category vehicles must comply with the requirements of Schedule K, article 2 Competition Numbers, except as follows:

- Groups J, K, L, Sa and Na are exempted from the requirements as to background specified in Article 2.3.
- Notwithstanding the prescriptions of article 2.3, all 5th Category vehicles which have a disc or rectangular background to the competition number may carry either black numbers on a white background or white numbers on a black background.
- Applications for exemption from the requir-ements as to background specified in article 2.3 and/or for the carriage of numbers differing in typestyle, size, colour or placement to the normal requirements may be made in individual cases where the specified vehicle competed in such a visual form during the relevant group period. Approvals to such applications will be evidenced by inclusion in the Certificate of Description of photographs showing the approved style of competition number on the car.

© Confederation of Australian Motor Sport Ltd. All use subject to Conditions of Use at *www.camsmanual.com.au*