# OFF ROAD

## General Requirements for Off Road Vehicles

### GR 1 DEFINITIONS

All vehicles shall comply with the definition of an automobile, ie, a land vehicle propelled by its own means, running on at least four wheels not in a line which must be normally in contact with the ground and of which at least two must effect the steering and at least two the propulsion; save that CAMS' jurisdiction extends also to "All Terrain Vehicles" which are not required to comply with the foregoing definition.

### GR 2 FIREWALL

Each vehicle must be fitted with an effective firewall which must separate the occupant/s from the fuel tank and from the engine. With the occupant/s seated in a normal position, the fuel tank must not be visible, whether fore or aft of the passenger compartment.

### GR 3 PROTECTION

Each vehicle shall be so constructed that the occupant/s are protected from the entry of foreign matter into the driving compartment from the road and/or road wheels by the provision of an adequate floor pan and coachwork.

Further, all vehicles shall be equipped with a transmission system so arranged that the propeller shaft and universal joints, if passing through or beneath the passenger compartment, shall be under the floor pan, or fitted in tubes or casings. Such floor pans, tubes or casings shall not be of a temporary nature, but shall be joined together and firmly fixed to the coachwork or chassis. Any chains used in the transmission of power or for driving any auxiliary component shall be effectively guarded.

Where any engine and/or gearbox/automatic transmission intrudes into the crew area or, in Performance 2WD and Extreme 4WD, has resulted in any modification of the firewall, it must be fitted with a steel bell-housing or scatter shield complying with the provisions of Schedule M (see "General Requirements for Cars and Drivers" in the CAMS Manual of Motor Sport).

### GR 4 TAILSHAFT

Each vehicle shall be so constructed that, in the event of any breakage of the tailshaft, its components or mountings, it shall be effectively prevented from striking the ground.

### GR 5 FUEL TANK/S

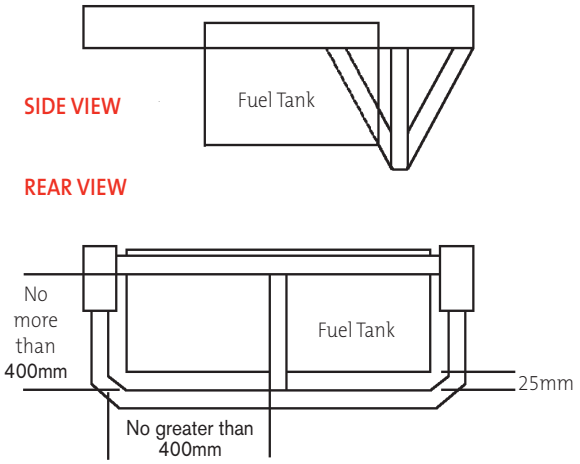


Where fuel tanks are exposed to rearward impact, in any class of vehicle, and not protected by chassis structure, they are to fit a protection structure in accordance with the following diagram.

Steel tubing of dimensions no less than 25mm x 2.5mm, or 30mm x 1.6mm shall be used in the construction of the protection structure.

All petrol tanks must be fitted with a leak-proof filler cap. Each fuel tank must be vented to the atmosphere,



© Confederation of Australian Motor Sport Ltd. All use subject to Conditions of Use at *www.camsmanual.com.au*

externally to the coachwork. The vent pipe must be located on the upper surface of the tank and as close as possible to a corner. A tube of at least 8mm diameter must rise above the tank a distance at least equal to the deepest dimension of the tank; be so arranged that it crosses the tank to the side opposite that of entry; and be directed downwards to a point at least 150mm below the lowest point of the tank.

As an alternative to a vent pipe, a suitable non-return valve may be fitted to the top surface of the fuel tank.

Fuel tank capacity is free. It is strongly recommended that fuel-cell foam be used in all fuel tanks.

## GR 6 REVERSE GEAR

Each vehicle must be fitted with an operable reverse gear.

## GR 7 REAR VISION

Each vehicle shall be fitted with at least two rear vision mirrors each of which must have a reflecting surface of at least 50cm$^2$, and which must provide unobstructed view to the rear of the car for the driver or, where applicable, the passenger.

## GR 8 TOWING POINTS

Each vehicle shall be fitted with readily accessible towing points at front and rear, one forward of the front axle, the other rearward of the rear axle, such to be distinctively coloured bright red. If in the form of an "eye" they shall have an internal diameter of not less than 40mm.

## GR 9 CHASSIS/FRAME

### 1. GENERAL REQUIREMENTS

Frames complying with these regulations and the specific class regulations shall be eligible for CAMS Off Road competition.

Construction, and in particular welding, must be to recognised industry standards. Unsatisfactory construction could result in an application for a log book being refused, and/or not passing scrutiny at an event.

Due to the extremely wide variety of off road vehicle designs, the minimum requirements for frames relate primarily to the compartment within which the crew shall be accommodated, and thus the protection of the occupants. Material and design of other aspects of chassis design not specifically referred to or controlled by these regulations, the Off Road GRs or SRs are free. However, design should always take into account crew safety.

Any frame constructed of high carbon heat-treated steel tubes (eg, chromoly) of less than 38mm x 2.4mm shall be subject of CAMS ROPS homologation, and this documentation must be available at scrutiny or the vehicle may not be permitted to start. Refer Article 4 of this regulation.

All vehicles must be subject of an inspection by at least a Grade 3 Scrutineer (as approved by the relevant state office) prior to the issue of a CAMS log book.

Each Pro, Prolite, Super 1650, Sportsman, Extreme 2WD, Clubman automobile and any other automobile where the rear wheels are not adequately protected by the bodywork, must be fitted with deflection (nerf) bars. These are to be constructed from metal, mounted externally on the frame and must extend to at least the outer extremity of the rear tyre tread. They are to be braced at a third point which is between, but not collinear with, the two end mounting points. The overall length between the front and rear mounting points of such bars shall be not less than 800mm. The tube must be at least of 30mm diameter x 1.6mm wall thickness. Any side-mounted fuel tanks must be entirely in-board of the bars. (Refer diagram and Regulated Tubes Specifications.)

Any Extreme 2WD and Extreme 4WD automobile which utilises a production floor pan (eg, Extreme 2WD Baja) may continue to comply with GR 18.

Implementation: Cars which are subject of a CAMS log book issued prior to 1 January 1998 may continue in competition provided they remain in conformity with the regulations that were in force up to that date, save for the requirement for roof reinforcement as outlined in Article 3.2 of the following regulations. All other buggies are required to be in compliance with this present regulation in its entirety.

Each Extreme 2WD, Performance 2WD, Production 4WD and Extreme 4WD automobile (except where provided for by Specific Requirements) must be fitted with full bodywork of a style commercially available from the vehicle manufacturer. The use of chassis/cab vehicles without rear bodywork, and of tray top vehicles, is prohibited on the grounds of safety.

All frames shall incorporate the following:

- Frames must be designed and made so that they substantially reduce deformation of the cockpit space and so reduce the risk of injury to occupants.
- All joints shall be welded.
- "Gusseting" of tube joins is permitted, and in the case of side protection bars joined in an "X" configuration, gusseting is highly recommended.
- Tubes forming part of the chassis/frame must not carry fluids.
- The frame must not unduly impede the entry or exit of the driver and co-driver/navigator. Two points of exit from the vehicle are required. These must have unimpeded access for the crew, and at least one must be able to be used if the vehicle were to be on its side or upside down. Crews must be able to exit the vehicle within 10 seconds.
- Where the occupants' crash helmets may come into contact with the frame, non-flammable high-density



© Confederation of Australian Motor Sport Ltd. All use subject to Conditions of Use at *www.camsmanual.com.au*

padding must be provided for protection. Padding complying with FIA specifications is recommended.

**Guidance on welding:** All welding must be of the highest possible quality with full penetration and preferably using a gas shielded arc.

Although good external appearance of a weld does not necessarily guarantee its quality, poor-looking welds are never a sign of good workmanship.

When using heat-treated steel the special instructions of the manufacturers must be followed (eg, special electrodes, gas protected welding).

It must be emphasised that the use of heat-treated or high carbon steels may cause problems and that bad fabrication may result in a decrease in strength (caused by brittle heat-affected zones) or inadequate ductility.

## 2. MANDATORY TUBES

**2.1 Basic frame requirements:** All frames shall incorporate all bars outlined in diagram 1.

**Diagram 1**

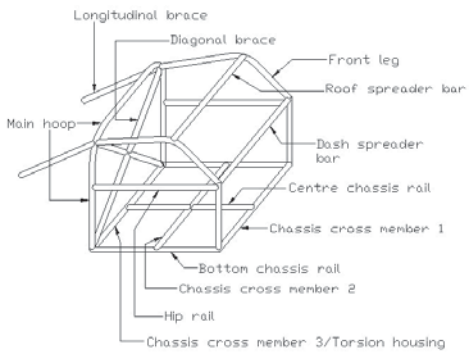


Omissions or design variations to the basic frame requirements are not permitted unless noted by CAMS as an acceptable alternative, or as an alternative which requires CAMS ROPS homologation, and the vehicle is subject of such homologation.

**2.2 Design requirements:** All frames shall incorporate the following:

- A main hoop with two diagonal braces.
- A hip rail on each side of the car.
- A chassis bottom rail on each side of the car
- A centre chassis rail.
- Front legs on each side of the car.
- A chassis cross member is required in three locations:
  1. base of the main hoop;
  2. approximately half way between the main hoop and the front leg; and
  3. between the front legs.
- Longitudinal braces mounted near the roof line and near the top of the outer bends of the main hoop. Longitudinal braces must make an angle of 30° or more to the vertical.
- A dash spreader bar.
- A roof spreader bar.

**2.3 Acceptable alternative designs/method of construction:** The following alternative designs are acceptable:

- Two chassis centre rails are permitted.
- A torsion bar housing may replace the chassis cross member at the base of the main hoop, and if so, this tube need not comply with the material requirements outlined in this regulation.
- A transmission "tunnel" may be constructed for an Extreme 2WD automobile, providing that it incorporates the required cross members. These may be detachable, providing they are in constructed as a demountable joint in accordance with Schedule J (refer "General Requiremetns for Cars and Drivers" in the CAMS Manual of Motor Sport).
- Either the main hoop shall be a continuous length of tube, or the front leg and longitudinal brace shall be.
- Additional bars are permitted in all areas other than the window openings, which shall be as per Article 3.3 and/or 4.

**2.4 Alternative designs requiring CAMS homologation:** Main roll bar hoop reinforcement variation – refer diagram. Note that the diagonal reinforcement commences above the base of the frame.

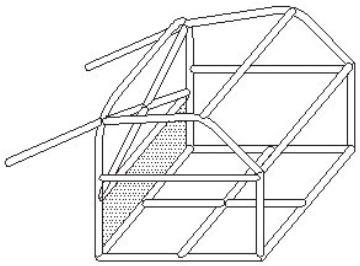



© Confederation of Australian Motor Sport Ltd. All use subject to Conditions of Use at *www.camsmanual.com.au*

**2.5 Front chassis section:** A substantial structure is to be built into the front section of the vehicle which shall protect the crew in the case of a frontal impact.

This structure shall incorporate at least four longitudinal tubes of at least 38mm x 2.4mm, of one of the approved frame tube materials.

**2.6 Rear chassis section:** Rear stays must be supported by substantial framework constructed of the same material as the main hoop. Refer also to GR 5.

## 3. OPTIONAL TUBES

**3.1 Side protection options:** The use of one the following side protection options are suggested as a minimum.

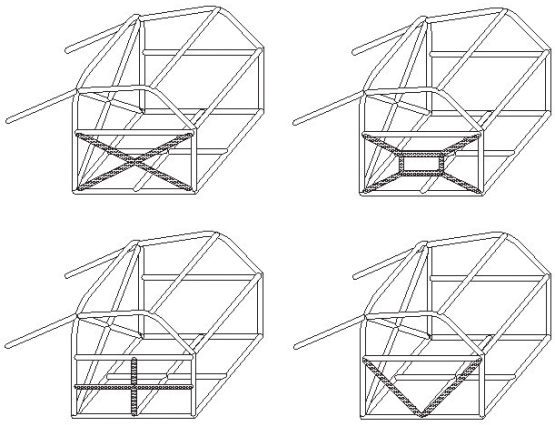

**3.2 Roof and rear stay bracing options:**

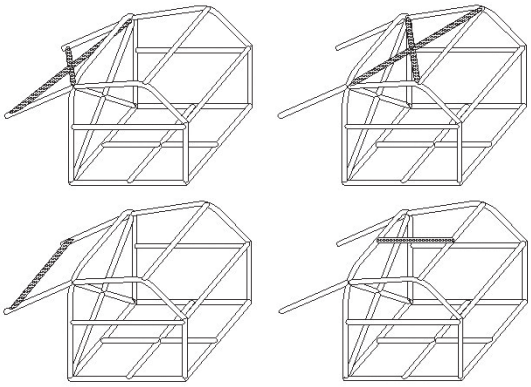

**Note:** A single tube in either direction is also acceptable as an alternative to the "X" option in the roof area.

**3.3 Front window opening bracing options:**

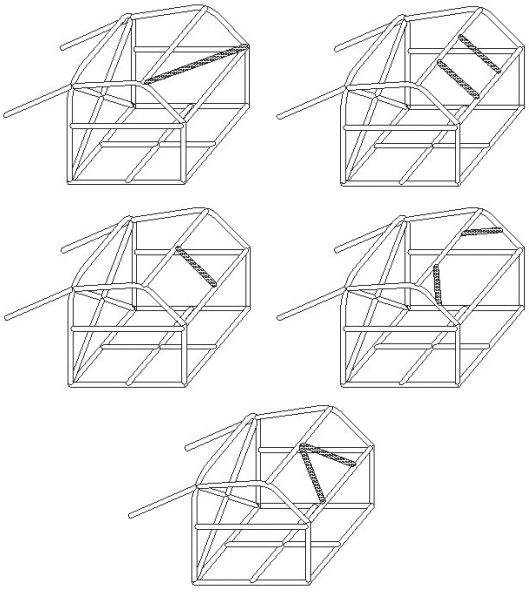

**Note:** An "X" is not permitted in the front window opening.



© Confederation of Australian Motor Sport Ltd. All use subject to Conditions of Use at *www.camsmanual.com.au*

## 4. OTHER COMPULSORY TUBES

**4.1 Compulsory reinforcement for Buggies with roof spans 700mm or greater:** The following roof reinforcement is mandatory for buggies with roof spans over 700mm, and recommended in others.

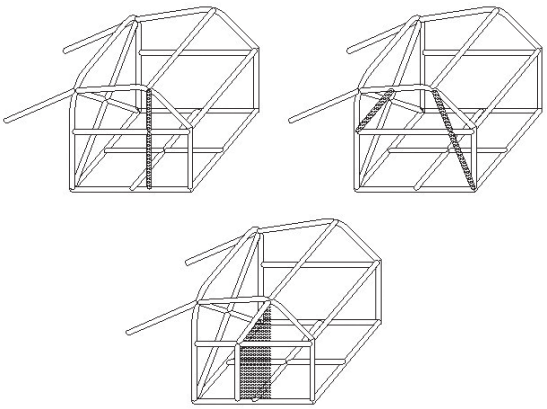

Notwithstanding "Implementation", all buggies with a roof span greater than 700mm between point C and point D of the diagram *"Compulsory Reinforcement for Buggies with Roof Spans of 700mm or Greater"* shall be fitted with reinforcing bars complying with either Option A or Option B in the diagram.

**Diagram: Compulsory reinforcement for Buggies with roof spans 700mm or greater**

**Roof reinforcement – Option A**

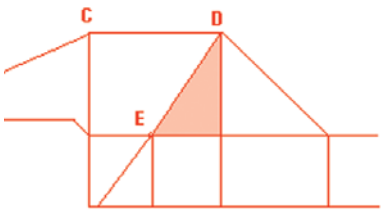


**Roof reinforcement – Option B**

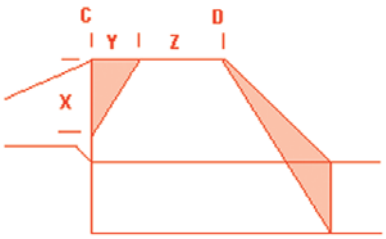


Dimension X – max 300mm
Dimension Y – max 250mm
Dimension Z – min 300mm

**Notes:**

1. The roof reinforcement bars are to be fitted in the shaded area/s as appropriate.
2. A support bar to the roof reinforcement bar must be fitted below the hip rail as indicated.
3. **Option A** – the roof reinforcement bar shall not extend further rearward than the mid-point on the hip rail (point E) between points C & D, nor shall it join the hip rail forward of the point vertically below point D.
4. **Option B** – roof reinforcement bars must be installed in both shaded areas.
5. The measurement of the roof span shall be taken from the inside of the vertical tube at point C and the commencement of the bend at point D.

## 5. MATERIALS

*Refer to "Regulated Tubes Specifications" table on page 11.*

6. It is the vehicle owner's responsibility to ensure a chassis number is present on the vehicle and that it is legible and viewable without the need for dismantling. Where the vehicle does not come from a manufacturer with a chassis number, one shall be applied (eg, by stamp, welded, attached plate) to the frame in a location unlikely to be damaged. In such cases it is recommended the chassis number match the log book number.

## GR 10 WINDOWS

All window glass may be removed and/or replaced by another suitable material eg, polycarbonate. All windows of other than glass must be clear, transparent and free of any colouring. Glass windows must not be coloured after production. Windows in any door must be mobile by lowering, sliding or pivoting over at least one-third of their area.

Vehicles fitted with full windscreens must be fitted with windscreen washers and an effective windscreen wiper in the driver's line of vision.

## GR 11 FIRE EXTINGUISHER

Each vehicle must be equipped with one or more hand-held fire extinguisher/s complying with Schedule H (refer "General Requirements for Cars and Drivers").

## GR 12 SEATS

There must be at least one seat for each occupant which must be capable of being occupied over a minimum width of 350mm. Seats may be disposed laterally or longitudinally. Seat bases must be protected by a suitable floor pan or skid plate of adequate strength.

Head restraints are required to be fitted for each seating position. Each restraint, if not incorporated into the seat, must consist of a metal backing plate at least 2mm thick and not less than 225cm$^2$ in area, together with a resilient padding at least 25mm thick. The restraint shall be attached by welding or other suitable means



© Confederation of Australian Motor Sport Ltd. All use subject to Conditions of Use at *www.camsmanual.com.au*

and have no protrusions into the padded area. With the occupant seated in the normal position, the top of the restraint or seat shall be no lower than the centre of the helmet and no further than 50mm from the helmet.

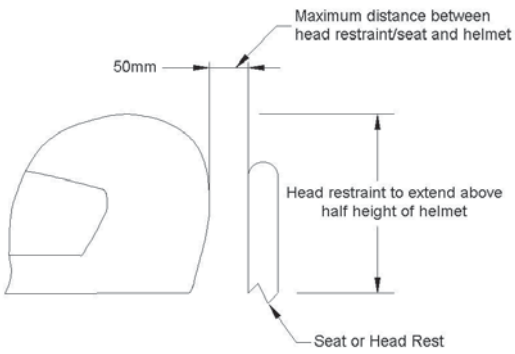


Any portion of the roll cage which could come into contact with the helmet of any occupant shall be padded.

The minimum width of the foot space for each occupant is 250mm measured at the level of the pedals along a horizontal line at right angles to the longitudinal axis of the chassis.

## GR 13 ROOF

The height of the roof on cars must be at least 850mm measured from the lowest part of the uncompressed seat cushion vertically and coincidentally with the centre line of each seat. The roof must be at least 50mm above the occupants' helmets when they are seated normally.

All open cars must be fitted with roof plates of the following specifications:

**Length:** at least 600mm so displaced that at least 300mm will be forward of the driver's forehead when seated in the vehicle.

**Width:** is determined by the position of the longitudinal braces of the roll cage; the plate shall span the gap from one to the other.

**Mounting:** shall be by welding or bolting to tabs at intervals not greater than 300mm; or by hinge/s. The drilling of holes in any part of the roll over protection to facilitate the mounting of the roof is not permitted.

Material: may be of aluminium (at least 2.6mm (12g)) or steel sheet (at least 1.2mm (18g)).

In addition to the above, any hinged roof plate shall comply with the following:

(i) The plate must be attached along its front edge by a continuous hinge which extends across the width of the roof to within 20mm of the side tubes.

(ii) The minimum acceptable hinge is 50mm continuous type with a steel pin of at least 2.5mm diameter.

(iii) Both side and rear outside edges must overlap, and be supported by, the roll cage structure.

(iv) Attachment of the hinge to the roof panel must be at intervals not greater than 30mm. The minimum acceptable fixing device is a 3mm diameter steel or Monel rivet.

(v) The hinge must be attached to a mounting plate, which must be integrated with the front hoop. Attachment of the hinge to this plate must comply with sub-paragraph (iv) above.

(vi) At least two latches, self-locking or rubber bonnet catch type, suitable for securing the roof panel closed, are required. Catches must be free of any sharp or protruding edges.

(vii) Pop rivets used are to be corrosion resistant eg, Monel metal.

## GR 14 BONNET

If fitted with rear hinged bonnets and/or panels there must be at least two independent systems of adequate strength and limited extensibility which simultaneously hold each panel completely closed.

## GR 15 BRAKES

**Primary braking:** Vehicles are required to be fitted with brakes controlled by a foot pedal operating simultaneously on four wheels.

**Emergency braking:** the provision of an operable and effective hand-brake is compulsory unless the car is fitted with a dual circuit braking system.

The use of copper brake lines is prohibited.

## GR 16 STEERING

Steering column locks on any car not registered for use on public roads must be removed or rendered inoperative.

Any production vehicle manufactured after 1 July, 1971 must be fitted with a steering column which complies with ADR 10A or 10B. All other vehicles must be fitted with a steering column which incorporates at least two universal joints, the shafts of which are offset to ensure collapsibility.

## GR 17 RADIO

The carrying of equipment providing radio communication between vehicles and pit or service crews is



© Confederation of Australian Motor Sport Ltd. All use subject to Conditions of Use at *www.camsmanual.com.au*

permitted.

## GR 18 ROLL OVER PROTECTION

Other than those complying with GR9, all vehicles must be fitted with roll cages, as specified in Schedule J (refer "General Requirements for Cars and Drivers"). The use of two longitudinal main hoops, one on each side of the vehicle, is permitted so long as the configuration shown in Schedule J is followed.

The cages must be at least 50mm above occupants' helmets at the top of the main hoop member/s.

Each automobile in Extreme 2WD, Performance 2WD, Production 4WD and Extreme 4WD is permitted the use of **flexible** lug mounts on the rear brace of the roll over protection conforming to the following minimum specifications:

(i) Outer sleeve

| | |
|---|---|
| **Material:** | same as used for rear brace or superior and welded to end of rear brace |
| **Wall thickness:** | 2.5 mm minimum |
| **Outside diameter:** **Min:** **Max:** | same as used for rear brace<br>25% larger than OD of rear brace |
| **Length:** **Min:** | same as OD of rear brace |

(ii) Bushing material

| | |
|---|---|
| **Material:** | rubber, urethane, nylon or similar flexible material |
| **Outside diameter:** | no greater than three and a half times the OD of the inner sleeve |
| **Length:** **Min:** | same as length of outer sleeve |

(iii) Inner sleeve/spacer tube

| | |
|---|---|
| **Material:** | steel |
| **Wall thickness:** **Min:** | 1.0 mm |
| **Inside diameter:** | must "match" OD of the cross bolt |
| **Length:** **Min:** | no greater than the length of the bushing material, and at least 200mm longer than the outer sleeve |

(iv) Cross bolt

| | |
|---|---|
| **Diameter:** **Min:** | 11.0 mm or 7/16 inch |
| **Grade:** **Min:** | 8.0 |

(v) Mounting lugs

| | |
|---|---|
| **Material:** | steel |
| **Thickness:** **Min:** | 5.0 mm |
| **Width/height:** **Min:** | not less than the OD of the bushing material |

## GR 19 RESTRAINTS

All vehicles must be equipped (for each occupant) with safety nets or wrist restraints, each properly attached, which ensure that the limbs of crew members cannot project beyond the line of the bodywork of the vehicle. If wrist restraints are fitted they must be worn at all times whilst the car is moving in competition.

## GR 20 SEAT BELTS

Full harness seat belts complying with the requirements of Schedule I (refer "General Requirements for Cars and Drivers") must be fitted and worn by all occupants during competition. In addition, a crotch restraint which effectively prevents the lap belt from riding up the wearer's body must be fitted.



© Confederation of Australian Motor Sport Ltd. All use subject to Conditions of Use at *www.camsmanual.com.au*

## GR 21 EMERGENCY & FIRST AID

**(not applicable to Stadium Racing)**

All vehicles must carry on board one standard warning triangle of 200mm sides, for use in case of breakdown or accident, **an OK/SOS sign** and an effective tow rope of at least 5m length.

All vehicles are required to carry on board a weatherproof emergency kit, containing at least the following:

| PACKS 1 & 2 | |
|---|---|
| **2 x extra large universal accident dressings** | **Use for major wounds. Bind firmly for bleeding control, using the large bandages contained in Pack 3.** |
| **PACK 3** | |
| 2 x large open weave bandages | Use for binding dressings in place. |
| 2 x medium open weave bandages | Use for smaller dressings. |
| 1 x pair dressing scissors | Use for cutting dressings, clothing etc. |
| 1 x roll adhesive tape | Use to secure eye pads, chest closures etc. |
| 6 x safety pins | Use for fastening bandages, slings etc. |
| **PACK 4** | |
| 1 x large burn dressing with a non-adhesive surface | Shiny side to the burn. |
| 1 x thermo accident blanket | If weather conditions are cold, wrap the casualty in the blanket. |
| 1 x aluminium foil dressing | This is for covering open "sucking" chest wounds. Secure top and two sides with adhesive tape, leave bottom untaped. |
| 2 x medium combination pads | Use for smaller wounds. |
| 6 x adhesive plaster strips | Use for covering and closing small or minor wounds. |
| 1 x triangular bandage | Use for arm sling or to retain head dressing in place. |
| 2 x sterile eye pads | Use for eye injury. Secure with tape. Cover both eyes if the injury is serious. |
| Additional contents: | • First Aid booklet<br>• Eye stream (recommended) |

**NOTES:**

**1** Ensure scissor tips are protected by plastic sleeve after use.

**2** St John does not supply individual replacement items but will supply individual packs.

This kit is no substitute for first aid training.
If you are not trained in first aid, contact the St John state headquarters or your nearest St John Division.

## GR 22 AERODYNAMIC DEVICES

Any air dam fitted to the front of a vehicle may not exceed the width of the original coachwork at the front, and must not project forward beyond the line of the original coachwork. An aerodynamic device in the form of an aerofoil section may be fitted to an automobile of Pro, Prolite, Super 1650, Sportsman, Extreme 2WD or Extreme 4WD class subject to the following conditions and restrictions:

(i) The surface area of neither the top nor the underside of the aerofoil may exceed one square metre, and the device must not extend beyond the maximum width of the coachwork. Extreme 4WD automobiles may be fitted with aerofoils exceeding these dimensions, but only with the prior specific approval of CAMS. Such approval, with full dimensional approval, shall be recorded in the automobile's log book.

(ii) End plates may not exceed twice the maximum depth of the aerofoil sections, nor may they exceed the maximum length of the aerofoil section.

(iii) Any part of the car which has an aerodynamic influence on the stability of the vehicle shall be mounted on the



© Confederation of Australian Motor Sport Ltd. All use subject to Conditions of Use at *www.camsmanual.com.au*

entirely sprung part of the car, shall be firmly fixed and shall not be capable of adjustment whilst the car is in motion.

(iv) No element of any aerodynamic device shall extend rearwards of the rearmost element of the coachwork/chassis.

(v) The highest point of any aerodynamic device shall not be greater than 300mm above the highest point of the coachwork.

(vi) Where the roof comprises an aerofoil section yet is clearly the roof of the car:

(a) the total area of both of the side sections of the roof may not be greater than 25% of the area of the upper surface of the roof; and

(b) no separate or additional aerofoil may be fitted to the vehicle.

## GR 23 EXHAUST

Exhaust outlets must be pointed rearwards or sideways. Orifices shall not be less than 100mm above the ground and may not project more than 150mm beyond the rearmost portion of the car. The exhaust orifice must be located aft of a vertical plane passing through the midpoint of the wheelbase. The orifice may not project beyond the maximum width of the bodywork, nor terminate more than 50mm within the projected plan of the bodywork. Adequate protection shall be provided to prevent heated exhaust pipes from causing burns.

## GR 24 LIGHTING

All vehicles must be fitted with at least one rearward facing red stop lamp, of at least 21 Watts power. It is an offence to control the operation of the lamp other than by the foot brake.

Vehicles must also be fitted with at least one rearward facing amber lamp, of at least 18 Watts power and wired so that it operates at all times when the main power is switched on. No other switch is permitted.

Both lamps must be equipped with a bayonet-fitting globe, a sealed beam or Light Emitting Diode (LED). If LED dust and stop lamps are used, they must comply with ADR 6 and ADR 49 respectively. Both lamps must be fitted with a lens of at least 60cm$^2$ area. They must be mounted separately from any other rearward facing lamps, and be not lower than 200mm below the highest point of the vehicle, disregarding aerials, roof fin, number plate etc.

A penalty of exclusion shall apply for any action which inhibits the operation of any rearward facing lamp whilst the ignition is on, in addition to any other penalty which may be imposed by the Stewards of the Meeting.

The use of at least one headlamp will facilitate overtaking in dusty conditions.

Each vehicle must have a minimum of two white, minimum 50 watt (or equivalent LED), forward-facing headlamps fitted which shall be operational at the start of the event. At least one forward-facing headlamp shall be operational at the start of each subsequent section.

The Clerk of Course may require that headlights be switched on during competition at the event crew briefing or via event Supplementary or Further Regulations.

## GR 25 BATTERY AND BATTERY MARKER

The battery must be securely attached to the body or chassis and effectively covered so as to prevent spillage, even in the case of inversion.

There shall be attached to the coachwork a 150mm blue triangle marker indicating the location of the battery.

A battery isolation switch shall be fitted to all cars which effectively isolates all electrical circuits from the battery and stops the engine.

It shall be located in an area where it is capable of being operated by the seated driver and co-driver. Where the switch is not readily accessible from outside, an external switch or remote operating device (eg, pull cable) shall be located in the vicinity of the base of the driver side "A" pillar. The position of this switch shall be marked clearly by a symbol showing a red spark in a white-edged blue triangle on the exterior of the vehicle.

## GR 26 WARNING DEVICE

Vehicles must be fitted with an effective audible warning device sufficient in volume to ensure that a car being overtaken is aware of the presence of the overtaking vehicle.

## GR 27 FUEL AND FUEL FITTINGS

Only Commercial Fuel and Diesel fuel as defined by CAMS in Schedule G (refer "General Requirements for Cars and Drivers") may be used. The use of AvGas/Leaded Racing Fuel is specifically prohibited.

All fuel lines and hoses passing through the passenger compartment must be made of metal, braided neoprene, or other CAMS-approved material.

For all cars with electric fuel pumps, the power supply to all such fuel pumps must be cut off after a maximum of six seconds absence of crankshaft revolution, in accordance with the provisions of Schedule C, Article 10 (refer "General Requirements for Cars and Drivers").

## GR 28 DIESEL ENGINES

The effective engine capacity of a supercharged diesel engine will be calculated as the product of the swept volume multiplied by a factor of 1.36.



© Confederation of Australian Motor Sport Ltd. All use subject to Conditions of Use at *www.camsmanual.com.au*

## GR 29 WHEELS & TYRES

(i) The number and/or size of wheels is free provided that there are at least four, not in a line, or, if an all-terrain vehicle, three in triangular formation.

(ii) Wire spoke wheels are specifically prohibited.

(iii) Wheels of width greater than 13" must be fitted with tyres which are mechanically located.

(iv) Tyres may be re-worked, provided that the depth of the resultant tread pattern does not intrude into the original undertread rubber. The lack of a tread pattern is not necessarily a ground for rejection by scrutineers; but any tyre considered unsafe will be rejected.

(v) All tyres must be fitted with tubes, unless they are specifically designed for use without tubes. All valves must be fitted with metal caps. Valve stems shall not protrude beyond the outer edge of the tyre profile.

(vi) Cars must be so constructed that when both tyres on the same side of the car are deflated, no part of the car touches the ground.

## GR 30 NUMBERS

In all events the competition number must be displayed on each side of a panel carried so that the base of the panel is not below the level of the roof at its highest point. Such panel shall be parallel to the longitudinal axis of the car, vertical, white, and provide a space at least 25mm between each numeral of the number, and between each number and the edge of the panel.

The number must also be displayed on the rear of the car.

All numbers must be displayed in horizontal format, be at least 150mm height, with at least 19mm stroke width and be black in colour on a white background. They shall otherwise comply with the provisions of Schedule K (refer "General Requirements for Cars and Drivers").

All vehicles competing in Open events shall have competition numbers allocated by CAMS. Apart from in stadium races, the first digit/s of these shall denote the class of the vehicle, save that the Australian Champion may use the number "1".

The first three competition numbers in each class (ie; 101, 102, 103, 201 etc) are reserved for the exclusive use of the first three drivers in the preceding year's AORC; and the normal registered competition numbers used by these competitors will be held for them for the following year.

The use of any competition number ending with two or more zeros is not permitted.

**IN ADDITION TO GR1-29, AND WHERE SPECIFICALLY REQUIRED BY EVENT REGULATIONS, VEHICLES MAY BE REQUIRED TO COMPLY WITH ANY OR ALL OF THE FOLLOWING ADDITIONAL REQUIREMENTS:**

## GR 31 CATCH TANK

If fitted with a crankcase breather/s discharging to atmosphere, have fitted to such breather/s an oil trap container (which must be empty at the start of the competition), of at least two litres capacity (for cars of up to 2000cc) or three litres (for cars of over 2000cc).

## GR 32 WIRE LOCKING

Be fitted with locking or wiring devices which prevent the loosening of any oil drain plug/s.

## GR 33 AERIAL

In events conducted in sand dunes, be fitted with an aerial of not less than 4m height, to which is attached a red flag of not less than 600cm$^2$ in area.

## GR 34 ADDITIONAL LIGHTING

Be fitted with additional specified lighting equipment.

## GR 35 MUDFLAPS

Be fitted with effective mudflaps of suitably rigid material behind each driven wheel, the rear wheels and immediately behind the front wheels if they are driven. When the vehicle is viewed from the rear, the mudflaps shall, in conjunction with any mudguard fitted, completely obscure the tyre profile to within 80mm of the ground. For events run entirely on sand, neither mudguards nor mudflaps are required.

## GR 36 COMPETITION NUMBERS

In addition to the requirements of GR29, event organisers may require the competitor's number to be affixed in such other position/s as may be specified in event regulations.

## GR 37 EXHAUST

Be fitted with an exhaust muffler and/or spark arrester.

An exhaust muffler is defined as a device installed in the exhaust system which has the effect of reducing the exhaust noise emitted from a vehicle.

If organisers include in their supplementary regulations the requirement for a spark arrestor, then such spark arrestor shall be required to comply with either AS1019 – 1970 or alternatively hold USDA Fire Service Approval.



© Confederation of Australian Motor Sport Ltd. All use subject to Conditions of Use at *www.camsmanual.com.au*

## Regulated Tubes Specifications – All Tube Frames

Minimum specification of material used in the construction of frames shall be:

1. As specified in Article 4 of Schedule J (recommended) or;
2. High carbon heat-treated steel (eg, chromoly) with a minimum ultimate tensile strength of 600MPa or;
3. Tubing to AS1163.

Note: Tubing not forming part of the structure of the frame governed by this regulation (eg. suspension mounting points), is not required to conform to these specifications.

| Tube Title | Tube OD | Wall Thickness | Comments |
|---|---|---|---|
| *Material Complying with Schedule J, Article 4* | | | |
| Diagonal Brace | 38mm | 2.5mm | |
| Hip Rail | 38mm | 2.5mm | Continuous length main hoop to front legs |
| Main hoop | 38mm | 2.5mm | Minimum – 44mm OD recommended |
| Chassis and centre chassis rail | 38mm diameter or 40 x 40mm RHS | 2.5mm | |
| Compulsory X-members 1, 2 & 3 | 38mm diameter or 40 x 40mm RHS | 2.5mm | |
| Spreader Bars: 1. Roof 2. Dash 3. Hip Rail | 38mm | 2.5mm | |
| Longitudinal braces | 38mm | 2.5mm | |
| Front legs | 38mm | 2.5mm | |
| Roof reinforcement | 25mm | 1.6mm | Minimum dimensions – refer also to "implementation" |
| **Alternative Tubes – The following tube sizes are minimum dimensions, and may be used as alternatives to 38 x 2.5 CDS/CDW** | | | |
| High carbon heat-treated steel tubes | 38mm | 2.4mm | All regulated tubes must be to the same specification and meet the minimum dimensions outlined in this table. |
| All AS1163 tubes | 42.4mm | 2.6mm | |
| **Alternative Tubes Requiring Homologation by CAMS*** | | | |
| High carbon heat-treated steel tubes | Less than 38mm | Less than 2.4mm | All regulated tubes must be to the same specification and dimensions. |

*Note: The structure shall be required to withstand the **prescribed** test loads **to the main hoop, the front leg and the harness mount/s, the details of which are available from the CAMS Technical Department.** ~~described at Article 5.4, Schedule J (refer to Section 6 of the CAMS Manual of Motor Sport).~~
This must be certified by a qualified engineer acceptable to CAMS who is **either FIA approved (refer FIA Technical List No. 35) or is** a member of the Royal Aeronautical Society or Institute of Engineers Australia (MIEA). The base used for the load will be the bottom of the main hoop and the front leg tubes.


Performance METALS
performancemetalsaustralia.com.au (02) 45 777 769
CHROME MOLY & MILD STEEL TUBE
Performance Metals Australia is The Leading Supplier to the Motorsport and Aircraft Industries for all their raw material requirements.
Give Matthew a call now on 02 4577 7769, performancemetals@bigpond.com
Or visit our web site @ www.performancemetalsaustralia.com.au for all your specialty requirements. See us in the Goods And Services Directory under Steel Suppliers, Roll Cages.
*Please call NOW for your nearest Distributor.....*





© Confederation of Australian Motor Sport Ltd. All use subject to Conditions of Use at *www.camsmanual.com.au*