SPECIFICATIONS OF AUTOMOBILES

All vehicles in races and other speed events must comply with the General Requirements of Automobiles (see "General Requirements for Cars and Drivers" in the CAMS Manual of Motor Sport).

6th Category – Other Vehicles
Truck Formula

TECHNICAL REGULATIONS

Part I - General

INTRODUCTION

These technical regulations govern competitions run on circuits between two axle tractor units as defined in Article 1.1 hereunder.

Except where otherwise provided for hereunder, all trucks must comply with the provisions of Schedules A, B and C (refer "General Requirements for Cars and Drivers" in the CAMS Manual of Motor Sport).

Racing trucks will be divided into the following groups:

(a) Super Race Trucks,
(b) Race Trucks, and
(c) Light Race Trucks.

I. DEFINITIONS

1.1 Truck: Trucks for the purposes of racing are two axle road tractor units, of which the cabin and chassis have been produced by the same truck manufacturer, as defined in Article 1.2 hereunder, and fifteen identical units of each have been produced in any one year. The vehicle must have a Gross Chassis Mass (GCM) of at least 14,000kg. At least 100 units of the engine fitted must have been produced in any one year.

Cab chassis combinations must be commercially available from any manufacturer, as defined in Article 1.2. It is the entrant's responsibility to produce any evidence requested by the scrutineers, to support any claim that a particular vehicle is eligible for competition.

1.2 Manufacturer: The term "Manufacturer" in these regulations must be considered as covering only those firms who hold or who have held a coded "World Manufacturer Identification" for identifying the vehicle (VIN).

When the truck manufacturer fits an engine which it does not manufacture, the truck shall be recognised as a hybrid and the name of the engine manufacturer shall be associated with that of the truck manufacturer, eg, Kenworth Cummins. Should a hybrid truck win a championship title, cup or trophy, this will be awarded to the manufacturer of the truck.

2. GENERAL PRESCRIPTIONS

2.1 General: All modifications are forbidden unless expressly authorised by these regulations.

The components of the truck must retain their original functions.

It is the responsibility of each competitor to satisfy the Super Truck Racing Technical Commissioner and the stewards of the meeting that the truck complies with these regulations in their entirety at all times during the event.

All vehicles must be presented at scrutiny in a clean condition.

2.2 Tachographs: Speed is limited to a maximum of 160 km/h.

All competing vehicles must be fitted with a correctly calibrated and functioning tachograph of an approved type. Any vehicle which is not fitted with a tachograph approved by the Super Truck Racing Technical Commissioner will not be eligible to compete in the championship.

In addition to the fitting of an approved tachograph, each vehicle must be fitted with a working cigar/cigarette lighter socket acceptable to the Super Truck Racing Technical Commissioner, to supply power for checking the tachograph. This socket must be fitted inside the cab, visible from the driver's seat and less than one metre (40 inches) from the tachograph. It must be connected to the same battery supply as the tachograph and must be protected by a two-ampere continuously rated fuse. It must be wired as negative

© Confederation of Australian Motor Sport Ltd. All use subject to Conditions of Use at *www.camsmanual.com.au*

earth (eg, Hella part No. 8 EZ I OOLS241 or equivalent).

It is specifically forbidden to conceal, or to interfere in any way with the operation of the tachograph or associated wiring, drive-shaft or sender units.

If any change is made to the vehicle specification which may affect tachograph calibration, or if the system is interfered with in any way, it is the competitor's responsibility to have the tachograph re-calibrated and re-certified.

2.3 Dimensions and Weights:

(i) Ground clearance: No part of the vehicle may touch the ground when all the tyres on one side are deflated.

This test shall be carried on a flat surface under race conditions with the driver on board. In the case of adjustable suspension these measurements shall be made with the suspension in its lowest position.

(ii) Ballast: It is permitted to make up the weight of the vehicle with one or several ballasts, provided they are strong unitary blocks attached by means of tools, easily accessible for fixing seals, and placed between the chassis rails at the rear of the cab.

(iii) Ride attitude: The chassis must not slope downwards towards the rear of the vehicle when measured at the midpoint of the wheelbase and the rear of the vehicle.

2.4 Engine:

(i) Smoke: The engine must not produce visible exhaust emissions for more than five consecutive seconds.

(ii) Exhaust systems: Exhaust components may be modified or replaced by components of free design save that the outlet must terminate within the perimeter of the vehicle in plan view.

In order to minimise the risk of hot parts from a broken engine/turbocharger being blown onto the circuit, a protection device must be fitted to the end of all exhaust pipes. This device must be constructed so that any part with a diameter of more than 40mm cannot pass directly out the exhaust pipe; eg constructed of strips of metal 1.6mm thick x 25mm wide welded into the end of the exhaust, edge on to the exhaust gas flow, at not more than 40mm spacing.

(iii) Air induction system: No part of the air induction system may project more than 200mm beyond the sides or roof of the cab.

The total cross-section area of the air induction pipes or RAM air collector boxes must not exceed 1000cm^2.

2.5 Fuel oxidant: Fuel as per Schedule G (refer "General Requirements for Cars and Drivers").

2.6 Cab Interior:

(i) Trim: The interior trim is free.

(ii) Steering wheel: The steering wheel is free, provided that it is of proprietary manufacture.

2.7 Cab exterior:

(i) Rear warning lights: A rearward facing red warning light of at least 20 Watts and a maximum of 30 Watts must be mounted on the rear panel of the cab. It must be situated as high as possible on the vehicle centre line, and must be switched on at all times during practice and racing sessions. The lens of this lamp must be between 60 and 100cm^2.

Rearward-facing brake lights are to be fitted either side of cab and also at the rear of the vehicle.

(ii) Batteries: Vehicle batteries must be of at least 55 amp-hours capacity. They must not be positioned inside the cab. They must be securely fastened, with each battery held in place by at least two steel bolts of 10mm minimum diameter; and must also be protected to prevent short circuiting of terminals.

Batteries must not be visible from outside the vehicle.

(iii) Telemetry and Radio: Only voice radio transmission is permitted. The transmission of data by any other means between the moving truck and any person or instrument exterior to the truck is forbidden.

2.8 Wheels: The wheels must be of unmodified proprietary manufacture and must be such that no part of the rim or tyre fouls on any part of the vehicle at the extremes of steering or suspension movement.

The wheel nuts and studs used must match the wheel rims used. Wheel nuts must be of unmodified proprietary manufacture.

2.9 Tyres: See Appendix B.

2.10 Fuel tank:

(i) Type: Fuel tanks are free in respect of capacity, design and material, but must be of unmodified proprietary manufacture; and must also be fully proofed against accidental leakage or fuel spillage from fillers and vents.

Filler caps must have an effective closing action.

(ii) Position: The tank must be securely mounted on the chassis, behind the cab, between the internal faces of the chassis rails (or their vertical projections) and in front of the centreline of the differential housing; and must be adequately protected from impact.

2.11 Transmission:

(i) Transmission: The transmission/gearbox and final ratios are free, save that there must be a working reverse gear.

(ii) Clutch: The clutch is free.

(iii) Axles: The front axle assembly must be rigid. The front axle assembly may not be driven. It is not permitted to use the rear axle for active steering.

2.12 Steering geometry:

(i) Camber angle: The maximum negative camber angle on the steering axle shall be one degree.

(ii) Castor angle: The castor angle is free.

© Confederation of Australian Motor Sport Ltd. All use subject to Conditions of Use at *www.camsmanual.com.au*

2.13 Bodywork:

(i) Aerodynamic devices: Standard or optional aerodynamic devices fitted by the manufacturer may be removed. Optional/other aerodynamic devices may be fitted only if they do not contravene the requirements of Article 2.13(ii).

(ii) Body fairings (eg, aluminium panels fitted for advertising purposes or for appearance, covering side crash bars and chassis rails behind the cabin, not for aerodynamic advantage): Side and top body fairings may be fitted subject to the following provisions.

All fairings must be firmly affixed and made of rigid material to the satisfaction of the Super Truck Racing Technical Commissioner and/or Chief Scrutineer.

No fairings may impede access to safety devices, eg, fuel and electrical cut-off switches.

If fairings impede inspection of the side guards they must be removable for scrutiny purposes.

Top fairings must be able to support a weight of 80kg placed upon them. No fairing may extend forward on the front wings or rearward of the end of the chassis rails. No wheel/tyre may be obscured by a side fairing.

Fairings may not extend beyond the unfaired vehicle outline (in plan view). Rear axle mudguards may be integral with fairings.

Underbody fairings are forbidden.

(iii) Windscreen and body glazing: A windscreen of laminated glass, bearing the manufacturer's mark to verify this fact, must be fitted.

All other windows may be of any type of safety glass, or of transparent plastic of at least 4.8mm thickness. However all window operating mechanisms must function as intended by the manufacturer. In particular, the window-opening system envisaged by the manufacturer must remain.

A protective net or mesh complying with the provisions of Schedule I (refer "General Requirements for Cars and Drivers") must be fitted to the inside of the driver's door.

2.14 Accessories: Supplementary accessories which do not materially affect the performance or the handling of the vehicle are permitted (eg, air horns).

3. SAFETY EQUIPMENT

3.1 General: Any truck, the construction of which is deemed by the Super Truck Racing Technical Commissioner and/or Chief Scrutineer not to be safe, may be excluded by the stewards of the meeting.

3.2 Cables, lines and electrical equipment: It is recommend-ed that there be no connections in the cab, apart from at the front and rear bulkheads. If the series production fitting is retained, no additional protection is necessary.

(i) Fuel lines: It is prohibited to run any fuel lines inside the cab.

(ii) Oil lines: The only oil lines which may run inside the cab are those leading to temperature or pressure gauges.

(iii) Coolant lines: The only coolant lines which may run inside the cab are those leading to temperature or pressure gauges, or to the cab heater. All such lines must be painted red and, if non-metallic, must be enclosed in a solid metal cover or an internally or externally metal braided hydraulic pressure hose.

3.3 Additional fasteners:

(i) Cab lock-down: Vehicles with tilt cabs must have an additional device which bridges the normal tilt lock mechanism and which will hold the cab in position in the event of that mechanism disengaging.

The minimum requirement is either one steel bolt (or pin) of at least 16mm diameter; or two steel bolts (or pins) of at least 12mm diameter.

Wire cables and/or chains are not acceptable.

(ii) Bonnet lock-down: All bonnets must be fitted with a locking device complying with the provisions of Schedule B (refer "General Requirements for Cars and Drivers").

3.4 Seat belts: All vehicles must be fitted with seat belts which comply with Schedule I (refer "General Requirements for Cars and Drivers"). In addition:

(i) the use of a six-strap harness is recommended,

(ii) shoulder straps must be mounted at an angle of not more than 20° to the horizontal from the wearer's shoulders, and

(iii) the shoulder straps must be fixed to or supported on a rear transversal tube attached to the roll bar.

3.5 Fire extinguishers: Each truck must be fitted with at least one fire extinguisher complying with the provisions of Schedule H (refer "General Requirements for Cars and Drivers"). In addition, an automatic extinguishing system complying with the relevant article of Appendix J to the FIA International Sporting Code may be fitted.

3.6 Circuit breakers - engine shutdown: Vehicles must be fitted with a circuit breaker and a choker device, which shuts down the engine and disconnects the batteries from all electrical circuits except that of the automatic fire extinguisher system.

The circuit breaker and the choker switch must be placed on the outside of the cab, between the chassis and the side guard rails and must be easily accessible at all times, even if the vehicle is lying on its side or roof. The switch must be painted yellow and identified by a red spark on a white-edged, blue triangle. A prominent notice not less than 20cm in width should be affixed to each side of the vehicle to indicate the location of the switch.

In addition, an engine shutdown switch must be fitted inside the cab, with its On/Off positions clearly marked. It must be operable by the driver when normally seated and wearing his seat belt. The switch must also isolate any electric fuel pumps.

© Confederation of Australian Motor Sport Ltd. All use subject to Conditions of Use at *www.camsmanual.com.au*

In the case of vehicles which use a mechanical engine shutdown system, a shutdown device may be fitted on the outside, separate from the electrical circuit breaker. However, the device must be fitted close to the circuit breaker, be clearly marked and have clear operating instructions, eg, "Pull knob to stop engine".

3.7 Roll over protection: See Appendix A.

3.8 Side, front and rear guards:

(i) Side guards: Metal side guards must be fitted between the wings of the front and driven axles to prevent wheels interlocking and to protect fuel tanks and other external parts. The side guards must comply with any one of the following:

(a) one steel channel each side, 100mm high x 50mm x 5mm wall thickness, or

(b) one steel box section each side, 100mm high x 50mm x 3mm wall thickness, or

(c) one steel tube each side, 65mm diameter x 3mm wall thickness, or

(d) two steel tubes each side, 50mm diameter x 3mm wall thickness.

Aluminium may be used in place of steel, but in such cases the material thickness must be doubled. Supports/outriggers from the chassis to the side guards must be made from material at least equal in strength to the side guard material.

All tubes and box sections must have a 5mm hole drilled in a visible position for inspection purposes. The maximum spacing permitted between any two outriggers is 1.5 metres, the maximum unsupported side guard overhang permitted is 500mm, and the maximum permitted gap (in side view) between the front rear wing and the side guard is 100mm.

Outriggers must be mounted to the chassis using spreader plates of at last 100cm^2 area and 5mm thickness. These plates must be welded to the outriggers and bolted to the chassis. At least 4 x 8mm diameter bolts must be used for each outrigger; these bolts must be at least grade 8.8 ("S" grade). It is permitted to drill holes in the chassis for the attachment of the side guards. The bottom of the side guards must be at least 500mm above the ground. The top must be not more than one metre from the ground. The side guards must extend outward so that they are within 300mm of the extremities of the vehicle in plan view. They may not project beyond the extremities of the vehicle in plan view.

All welding must be of the highest quality, with full penetration. It must be possible to inspect all welds without difficulty.

The side guards must not present any sharp angles or corners on the vehicle on plan view. It is permitted to cover the side guards with fairings as described in 2.13(ii), but all such fairings must be readily detachable to allow for inspection of the side guards.

Note: This regulation describes the minimum requirements. It is permitted to fit extra guards, so long as they do not project beyond the extremities of the vehicle in plan view or extend forward beyond the perimeter of the vehicle in plan view.

(ii) Front and rear guards: Guards must be fitted to the front and rear of the vehicle to prevent it from driving over the top of "Armco" safety barriers; and to assist with "suspended tow" vehicle recovery. These guards must meet the following requirements:

(a) **Front guard only:**

The front face of the guard must be vertical and no more than 200mm from the front face of the standard bumper.

The top face of the guard must be in line with the top face of the standard bumper.

(b) **Rear guard only:**

The rear face of the guard must be vertical.

No part of the rear guard may extend more than 200mm behind the end of the chassis side rails.

The top face of the guard must not be higher than the top flange of the main chassis side rails, measured at the extreme rear of the vehicle.

The overall width of the rear guard must not exceed 2550mm.

(c) **Front and rear guards:**

The bottom face of each guard must be between 300mm and 400mm above the ground.

The bottom face of each guard must be between 1800mm and 2300mm wide.

All exposed parts of the guards which are not part of the standard bumper must be made of tubing.

The tubing material is free, but is recommended that safety cage or side guard tubing is used.

Ends of tubes must not be left exposed. Bottom tubes must be joined to top tubes/bumper and there must be no sharp edges or exposed comers or angles.

It is permitted to cover all or part of the guards with securely attached metal panels. Each guard must be able to withstand a load equal to the vehicle weight on the rear axle, applied horizontally to the bottom tube, along the axis of the vehicle. It must also be capable of supporting the weight of the rear end of the vehicle. These loads must not cause permanent distortion of the guards.

3.9 Towing eyes: All vehicles must be fitted with a towing attachment at both front and rear, the minimum internal dimension of which is to be 40mm. The strength and size of these towing eyes must be sufficient to allow the vehicle to be towed under all circumstances. They must be painted in a contrasting colour, eg, yellow, red or orange, for easy identification and be available for immediate use when required. They must not project beyond the front face of the front bumper or the rear face of the rear bumper.

3.10 Rear view mirrors: All trucks must be fitted with two external rear view mirrors, one fitted on each side of the truck, in order to give an efficient view of the rear. Minimum size 50cm^2.

© Confederation of Australian Motor Sport Ltd. All use subject to Conditions of Use at *www.camsmanual.com.au*

3.11 Fire protection: All vehicles must have a protective bulkhead of non-flammable material between the engine/ transmission and the driver's compartment, capable of preventing the passage of fluid or flames in the event of fire.

All gaps must be sealed with glass fibre.

It is forbidden to use magnesium for the bulkheads.

3.12 Wheels:

(i) Wheel rims: Split rear rims are forbidden.

(ii) Wheel nut covers: Wheel nut covers must be firmly affixed to all wheels on steering axles. No part of the wheel nuts or studs may project through these covers, which must be fixed to the rims by means of at least two separate attachments. Covers must be of at least 3mm thickness of steel or aluminium construction.

(iii) Wheel balance weights: It is prohibited to have removable balance weights fitted on any wheel. Balance weights must be welded or screwed on to the rim.

(iv) Spacers: It is prohibited to fit any spacers or adaptors between the wheels and the hub/drum.

3.13 Propeller shafts: A minimum of two full-circle steel safety loops must be fitted to each propeller shaft, to prevent it hitting the ground in case of breakage. They must be fitted so that they are positioned one on either side of the midpoint of the propeller shaft, and must be made from steel of minimum dimension 25mm x 6mm.

3.14 Cab:

(i) Seats: The original driver's seat must be replaced by one which complies with the provisions of Schedule C (refer "General Requirements for Cars and Drivers").

(ii) Tools: All tools and other loose equipment must be removed.

(iii) Steering lock: Any steering lock system fitted to the vehicle must be removed.

(iv) Parking brake: The location of the parking brake control must be clearly indicated by a notice at least 20cm in width placed inside the cab. The parking brake control must be operable by the driver while normally seated and with the seat belt fastened.

(v) Windscreen wipers and washers: All vehicles must be fitted with windscreen wipers and washers, which must be maintained in working order at all times.

3.15 Engine-oil catch tank: All engine breathers venting to the atmosphere must lead into a catch tank, arranged in such a way as to prevent oil from spilling onto the track. If a single catch tank is used, it must have a capacity of at least four litres. It is permitted to use multiple tanks, but each tank must have a capacity of at least two litres.

Tanks may be made of any material, but it must be possible to view the contents of the tank; eg sight glass is required in a metal tank, and plastic tanks must be translucent.

All tanks must be capable of being easily emptied.

3.16 Lamps: All forward facing lamps with a surface area of more than 32cm^2 must be adequately protected and secured in case of glass breakage. Alternatively they may be removed.

3.17 Mudguards: All vehicles must be equipped with mudguards over the rear wheels. They must have no sharp edges and must cover the full width of the tyre over a continuous arc of 120°. This minimum coverage must be achieved with a continuous surface of rigid material uninterrupted by any gaps, holes, slots or vents.

The mudguards must extend forward of the relevant axle centre line in vertical projection. The trailing edge of the mudguard must be no more than 75mm above the relevant axle centreline. No part of the mudguard may be more than 200mm radially from the circumference of the tyre.

The front mudguards must remain those of the homologated cab of the vehicle.

Part II - Super Trucks

4.1 Dimensions (see diagram 5):

(i) Overall width: The maximum permitted overall width of the vehicle is 2550mm.

(ii) Height of the cab: The height of the vehicle at the highest point of the cab must not be less than 2500mm, measured vertically over a width of 1700mm. The lowest point of the floor of the cab must be at least 1000mm from the ground.

(iii) Width of the cab: The width of the cab must not be less than 1700mm.

(iv) Ground clearance: Ground clearance must at all points be greater than 180mm; with the exception of the front and rear axles which must not be situated less than 150mm from the ground at their lowest points, and which must not generate an aerodynamic effect.

4.2 Engine:

(i) General: With the exception of the permitted modifications detailed in this article, the engine and all ancillaries must comply with the manufacturer's standard specifications. It is permitted to bore and sleeve

© Confederation of Australian Motor Sport Ltd. All use subject to Conditions of Use at *www.camsmanual.com.au*

cylinders back to manufacturer's standard specifications.

At least 100 units of this engine must have been built in any one year, and the entrant must be able to provide substantiating evidence of this at any time, using official documentation from the engine manufacturer.

The rear-most part of the engine block, which must consist of a single casting, must be situated forward of the midpoint of the wheelbase.

(ii) Cylinder head: The cylinder head is free.

(iii) Compression ratio: The compression ratio is free.

(iv) Cylinder head gasket: The cylinder head gasket is free.

(v) Pistons: Pistons are free, as are the rings, their pins and retaining method.

(vi) Connecting rods: Connecting rods are free, but they must be made from material consisting of at least 80% by weight of pure iron.

(vii) Crankshafts: The crankshaft is free but must be made from ferrous material. The use of non-ferrous materials for balancing the crankshaft is prohibited.

(viii) Bearings: The make, dimension and numbers of bearings are free, but the original type must be retained, eg, plain or roller bearing.

(ix) Fuel feed and induction system: Fuel injection system parts regulating the quantity of fuel to the engine may be changed, provided that the new parts fit the original location without modification to either the part or the location. The original fuel system design must be retained as the manufacturer envisaged, eg, Cummins PT.

(x) Camshafts: Camshafts are free, but must be made from ferrous material.

(xi) Valves: The material, dimensions and shape of the valves are free, but their operating principle (coil/hydraulic springs etc) in the original engine must be retained.

4.3 Cooling systems:

(i) Fuel/oil cooling system: Any fuel and oil coolers must be fitted entirely within the periphery of the bodywork when viewed from any angle.

(ii) Water and charge cooling system: The water and charge cooling system is free, save that it must be fitted entirely within the periphery of the bodywork when viewed from any angle. Water injection on the radiators is permitted on condition that this water contains no power boosting additives.

4.4 Exhaust system:

(i) Turbochargers: A maximum of two (2) single stage compression and expansion turbocharger units may be fitted. The fitment of the turbocharger/s must not cause any change in external body or chassis shape. It is permitted to modify or replace the induction manifold and the air intake system with components of free design to facilitate the fitment of the turbocharger/s.

(ii) Air induction system: Components of the air induction system, up to the turbocharger, may be modified or replaced.

4.5 Rear axle assemblies: Alternative rear axle assemblies may be fitted, but only rigid axles are permitted.

Only the rear wheels may be driven. Traction control is prohibited.

4.6 Suspension: The suspension and shock absorbers are free with the exceptions that:

(i) in the case of pneumatic suspension, the tanks must be of unmodified proprietary manufacture. It is forbidden for the vehicle's air system pressure to exceed 12 bar, and

(ii) it is forbidden for suspension components, other than those of proprietary manufacture, which have any axle locating function to be made of non ferrous material. (eg, spring hangers, shackles, springs, "U" bolts), and

(iii) no more than four shock absorbers may be fitted.

4.7 Wheels: Refer to Article 2.8.

4.8 Brakes:

(i) Braking system: The braking system is free subject to all components being of proprietary manufacture. An effective parking brake system must be fitted, operated mechanically, not by air pressure.

(ii) Cooling: Brake cooling is permitted using water and/or ducted air only. Cooling ducts must comply with the bodywork regulations in Article 2.13.

Any water tanks must be securely attached to the chassis.

4.9 Chassis: The chassis must be one of a series of which at least 15 identical units have been built in any one year. Local modifications only of the chassis are permitted, and then only if necessary to satisfy the safety requirements listed in Article 3 of these Regulations, or in order to fit an alternative transmission/engine.

All other modifications to the chassis are forbidden.

4.10 Cab: The dimensions of the cab must comply with the drawing in diagram 5.

The cab must be one of a series in which at least 15 identical units have been built in any one year by the same cab/chassis manufacturer. The entrant must be able to justify this number at any time using official documentation from the cab/chassis manufacturer.

The dashboard is free.

Pedals may be modified.

The external shape of the cab must be retained.

© Confederation of Australian Motor Sport Ltd. All use subject to Conditions of Use at *www.camsmanual.com.au*

4.11 Vehicle weight:

(i) Racing Weight: The minimum allowed Racing Weight (including driver) at any time is:

(a)	up to and including 11,950cc swept volume	**5000kg**	
(b)	over 11,950, up to and including 14,100cc	**5500kg**	and
(c)	over 14,101cc, up to and including 18,500cc	**6000kg**	

(ii) Distribution of weight: The minimum weight allowed over the front axle is:

(a)	up to and including 12 litres swept volume	**3000kg**	and
(b)	over 12 litre	**3300kg**	

Light Trucks

These regulations govern competition between light trucks in cab chassis form. The regulations for Super Truck Formula apply to these vehicles, and must be adhered to save where amended by the following regulations. The number of each regulation is that of the corresponding Super Race Truck Formula regulation.

1.1 Eligible vehicles: Any diesel powered Light Truck two-axle tractor unit of proprietary manufacture and of at least 8000kg GCM is eligible.

4.2 Engine: The maximum engine swept volume permitted is 7500cc.

With the exception of the permitted modifications detailed in Super Truck Regulations 4.2(i) to 4.2(x) (inclusive) the engine and all ancillaries must be exactly to manufacturer's standard specifications, save where otherwise authorised herein.

It is forbidden to vary the position of the engine in the vehicle. Manufacturers' optional positions are not allowed, original attachment points and components must be used.

4.3 Cooling system:

(i) Fuel/oil cooling system: Any fuel and oil coolers must be fitted entirely within the periphery of the bodywork.

(ii) Water System and Charge Cooling: The water and charge cooling system/s is free, provided always that it is fitted within the periphery of the bodywork when viewed from any angle. Water injection on the radiators is authorised on the condition that this water contains no power boosting additives.

4.4 Turbochargers: A maximum of two (2) single stage compression and expansion turbocharger units may be fitted. The fitment of the turbocharger/s must not cause any change to the external body or chassis shape. It is permitted to modify or replace the induction manifold and the air intake system with components of free design to facilitate the fitment of the turbocharger. Inter coolers are permitted.

4.5 Rear axle assemblies: The original rear axle assembly must be retained as fitted, save for the freedoms provided for under Article 2.11.

4.7 Wheel rims: Split rim wheels are not permitted.

Tubeless rims fitted to steering axles only, may be offset 125mm and must be of proprietary manufacture. It is permitted to use 17.5-inch tubeless rims only.

The maximum permitted tyre section width is 260mm.

4.11 Racing weight:

(i) Racing weight: The minimum allowed racing weight (including driver) at any time is:

(a)	up to and including 6500cc swept volume	**3000kg**
and		
(b)	over 6500cc, up to and including 7500cc	**3400kg**

4.12 Wings: Wings may be fitted to the rear of the vehicle subject to the design being approved by CAMS.

4.13 Cabin: Original external shape of cabin must be retained.

Minimum height of cabin floor from the ground 750mm.

Race Trucks

These regulations govern competition between Race Trucks. The regulations for Super Truck formula apply to these vehicles, and must be adhered to save where amended by the following regulations.

2.11 Transmission (General Regulations): The transmission/gearbox and final ratios are free, save that it must be manually operated by the driver via a mechanical linkage, and that there must be a working reverse gear. Any fluid within the transmission at greater than atmospheric pressure shall be for lubrication purposes only.

4.8 (i) Braking system (Super Truck Formula): The braking system must consist only of drum brakes, with all components being of proprietary manufacture. An effective parking brake system must be fitted, operated mechanically, not by air pressure.

© Confederation of Australian Motor Sport Ltd. All use subject to Conditions of Use at *www.camsmanual.com.au*

Appendix A – Roll Over Protection Structures

1. GENERAL

The driver's cab must be fitted with an internal safety cage to protect the driver and passenger/s if the vehicle is involved in a serious accident.

The minimum acceptable roll over protection requirements are detailed in this appendix, but the following should be noted.

(i) The effectiveness of a safety cage is the dependent on its finely detailed construction, suitable attachment to the cab and snug fitting against the bodywork.

(ii) Mounting bases should be made as large as possible in order to spread loads over the maximum area.

(iii) It is also advisable to weld the cage to the cab structure (eg, to the windscreen pillars and door pillars) wherever possible, to increase strength and rigidity.

All welding should be of the highest quality possible, with full penetration (preferably arc welding, and in particular under protecting gas).

These requirements are a minimum. It is permitted to fit extra elements or reinforcements in addition to the basic requirements (see diagram 2).

2. MINIMUM SPECIFICATIONS

The minimum acceptable safety cage structure is as shown in diagram 1. The cage must follow the interior shape of the cab as closely as possible, and must be free from unevenness or cracks. The safety cage, as shown in diagram 1, must be in one piece, ie, all parts must be welded together.

The attachment of the upper extremity of the rear diagonal brace must be on the driver's side of the cab.

It is recommended that struts additional to the requirements of diagram 1 be fitted to the safety cage, examples of which are shown in diagram 2. Such additional struts may be welded, bolted or clamped in place using connections provided for in Schedule J of the General Requirements for Automobiles.

The minimum mounting of the cage to the cab is to be by a minimum of four mounting bases, one for each vertical pillar of the cage. Each mounting base must have an area of at least 200cm^2 and a thickness of at least 3mm.

Reinforcing plates with an area of at least 200cm^2 and a minimum thickness of at least 3mm must be fitted so that the cab floor is sandwiched between the mounting bases and the reinforcing plates. At least three bolts must clamp each mounting base to its reinforcing plate; these bolts are to have a minimum grade of 8.8 Grade Metric ("S" grade), (8 Grade Imperial), and a minimum diameter of 12mm.

These are the minimum requirements. It is permitted to increase the number of bolts and to weld the safety cage to the cab shell (eg, to the windscreen and door pillars).

All mandatory tubes (see diagram 1) are to be steel tubes with a minimum yield strength of 340 MPa with minimum cross-section of 57mm external diameter x 4.9mm wall thickness, or 63.5mm external diameter x 3.2mm wall thickness, or 70mm external diameter x 2.4mm wall thickness.

Each tube in diagram 1 must have an inspection hole of 5mm diameter, drilled in an easily visible position.

The tube sizes quoted above are examples of standard sizes, which should be easily available. However, if one of these sizes cannot be obtained, the tube size will be acceptable if it exceeds the dimensions shown above, for example 60mm x 4.9mm or 57mm x 5.0mm is acceptable in place of the specified 57mm x 4.9mm.

© Confederation of Australian Motor Sport Ltd. All use subject to Conditions of Use at *www.camsmanual.com.au*

Appendix B – Tyres

1. GENERAL

All tyres fitted to the vehicle must:

(i) be of tubeless steel radial construction, and must not have undergone any major repairs,

(ii) have a speed rating of "L" or higher, and a load index of 3.5 tons,

(iii) have a tread depth of 0.5mm minimum measured across the full face of the tread at the beginning of each race or practice,

(iv) have a section width of not more than 315mm,

(v) not exceed the tyre manufacturer's permitted pressure when cold and

(vi) comply with the Australian Design Rules applicable to tyres.

Re-cut and/or hand-grooved tyres are not permitted, except as specifically authorised elsewhere in this appendix.

Special tread compounds and/or patterns are not allowed, nor are any externally applied chemical compounds which may effect tyre grip.

The Super Truck Racing Technical Commissioner shall be a judge of fact in relation to the Safety and Eligibility of any tyre.

2. TREAD PATTERNS

Except for the concessions listed after, the following tread patterns are to be used:

(i) on non-driven axles: steer-ribbed patterns only, and

(ii) on driven axles: steer or drive patterns.

The following concessions on hand cut treads are granted for safety reasons. It is absolutely forbidden to make any other modifications to standard tread patterns.

(i) On driven axles hand cut treads in which comply with any of the configurations shown in diagram 3 in this appendix are permitted, but all such treads must strictly comply with the dimensions shown in diagram 4.

(ii) Hand-cutting of tyres on non-driven axles is forbidden.

(iii) Only tyres marked "Regroovable" by the manufacturer may be hand cut.

3. RETREADED TYRES

Retreaded tyres must not be used on any steering axle.

© Confederation of Australian Motor Sport Ltd. All use subject to Conditions of Use at *www.camsmanual.com.au*

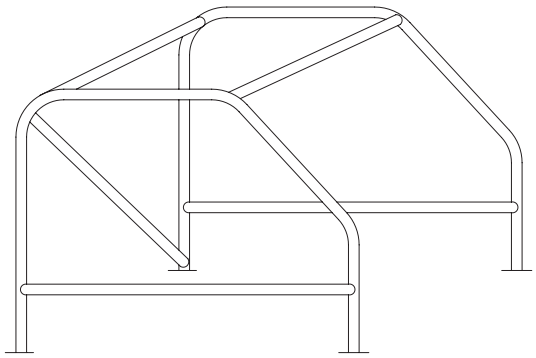

Diagram 1

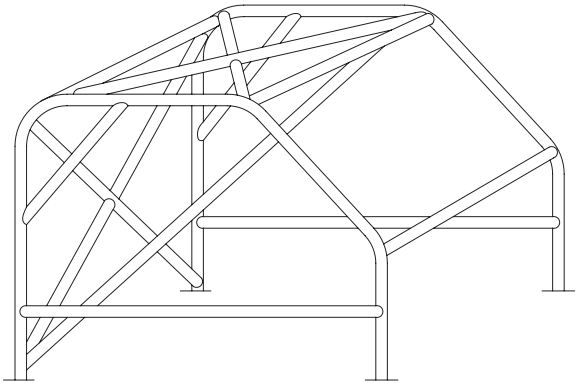

Diagram 2

Diagram 3

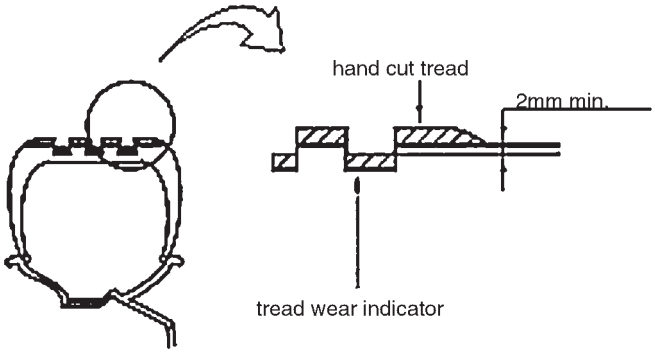

Diagram 4

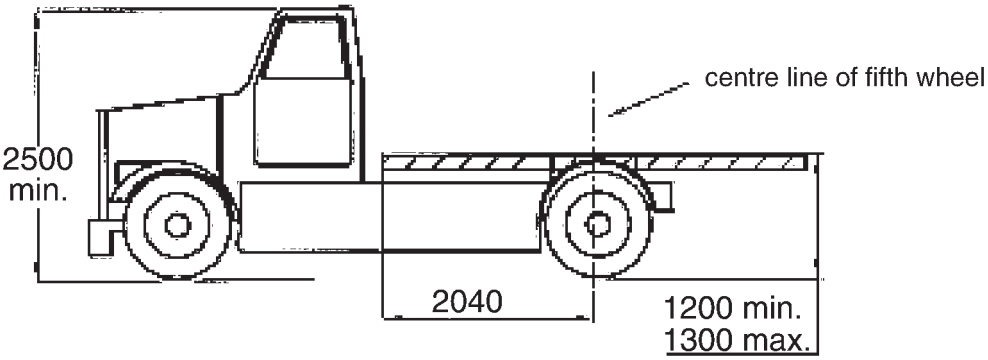

Diagram 5

© Confederation of Australian Motor Sport Ltd. All use subject to Conditions of Use at *www.camsmanual.com.au*