SPECIFICATIONS OF AUTOMOBILES

All vehicles in races and other speed events must comply with the General Requirements of Automobiles (see "General Requirements for Cars and Drivers" in the CAMS Manual of Motor Sport).

2nd Category – Sports Cars

The 2nd Category provides for two-seater sports racing cars and other highly-modified cars:

Group 2A	Sports Cars, open and closed
Group 2B	Marque Sports Cars
Group 2C	Clubman Sports Cars
Group 2F	Production Sports Cars

Cars must comply with the General Requirements for Automobiles, including Schedules A, B and, in races, C (refer to "General Requirements for Cars and Drivers" in the CAMS Manual of Motor Sport) as well as the Specific Requirements for each group.

Group 2B – Marque Sports Cars

The list of vehicles eligible for Class I or II as defined under 1.2 below is shown in "Group 2A and 2F Eligible Vehicles" (refer "Race" in the CAMS Manual of Motor Sport.)

I. DEFINITIONS

1.1 **Marque Sports Car:** A race vehicle derived from a registrable production sports car, with significant modifications to improve performance and reliability in speed events and races. The function of the Marque Sports Car Category is to cater for more highly modified Sports Cars, allowing competitors to further develop their vehicles over "Production Sports Cars" in performance design concept.

1.2 **Eligibility:** Cars must be derived from the Sports Car Recognition list approved by CAMS. To be considered for addition to the Sports Car Recognition list, at least 10 vehicles must have been sold and registered for road use in Australia with identical specification. Vehicles shall be classified as Class I or Class II depending on production numbers and production philosophy. A maximum capacity of 6000cc shall apply to all vehicles, save where a Class I vehicle has a standard capacity above that limit whereupon it may retain is original capacity plus 2%. Eligibility for vehicles with engine capacity greater than six litres is specific to a manufacturer's year/model combination, and the vehicle presented for competition must maintain the manufacturer's engine, driveline and chassis/monocoque design specification.

(i) **Class I:** Vehicles in Class I shall be representative of mass-produced vehicles, featuring fully enclosed bodywork, of which a minimum of 500 were produced world wide in at least one 12 calendar month period. Unless otherwise specified, such vehicles shall compete in their basic form for the model represented.

(ii) **Class II:** Vehicles in Class II are limited production vehicles, which do not comply with the provisions of 1.2(i) above, of which at least 10 examples have been constructed in a continuous 24-month period. These vehicles shall be subject to a CAMS Specification Document with which competing cars must continue to comply.

(iii) The Sports Car Racing Association of Australia (SCRAA) will make representations to the CAMS Recognition Committee on behalf of its members. The CAMS Recognition Committee shall be solely responsible for making recommendations to CAMS with regards to all matters relating to the recognition by CAMS of any vehicle as a Sports Car. Notwithstanding the provisions of Articles 1.2(i) and 1.2(ii), CAMS reserves the right to include or restrict other makes and models, or parts from such, at its sole discretion.

1.3 **Decorative strips:** These are regarded as any parts following the external contour of the bodywork and less than 100mm high; the function of which is to prevent minor body damage or is decorative. Badges describing the vehicle manufacturer and/or model are considered to be within this definition, but not the radiator grille.

1.4 **Materials:** Components which are for decorative purposes only and which are in nature not structural/load-bearing (eg, instrument surrounds, facia panel decorations), may be formed from carbon fibre or carbon/Kevlar matting. The use of carbon/carbon Kevlar composites, or titanium alloys, in any non-standard structural or mechanical component, unless specifically provided for by an article in the present regulations, is prohibited.

1.5 **Open Cars:** Any vehicle which does not have a supporting structure between the upper edges of the front windscreen pillars and rear window (where fitted) shall be regarded as an open car. Where a manufacturer

© Confederation of Australian Motor Sport Ltd. All use subject to Conditions of Use at *www.camsmanual.com.au*

provides a hard top as an option on an open car, this may be installed in compliance with the manufacturer's instructions, but the vehicle remains regarded as an open car.

1.6 Free: A component, deemed to be free under these regulations may, where fitted to the vehicle as standard, be removed or replaced. Where the removed component is replaced, the replacement is not restricted in design or material (unless otherwise specified) providing it performs only the same function. No modification may be made to surrounding components or bodywork to which the replacement is fitted, unless otherwise permitted. Where freedom is granted for the fitment of any component, such freedom is restricted to that component and such modifications as are allowed in Article 3.11. For the purpose of this article, a component shall be deemed to include all other components with which it is integrated, or to which it is attached by means the manufacturer intended to be permanent. Where a system is deemed as free, all components solely associated with that system are regarded as free, as per above.

2. REGULATIONS

2.1 Role of CAMS: The following technical regulations for 2B Marque Sports Cars are issued by CAMS and must be read in conjunction with the relevant Schedules of "General Requirements for Cars and Drivers".

2.2 Publication date for amendments: Each year in January at the latest, CAMS will publish all changes made to these regulations in the CAMS Manual of Motor Sport. Changes made for safety may come into force without notice. CAMS reserves the right to alter regulations at its discretion.

2.3 Measurement: All measurements relevant to the bodywork and suspension must be made while the car is stationary on a flat horizontal surface, without the driver, and with the steering centred.

2.4 Log book/Eligibility: The Competitor is responsible for furnishing any documentation to prove the eligibility of any part used or modification performed otherwise outside of these regulations.

2.5 Standard equipment: Where an article in the present regulations refers to standard equipment, it refers to the specifications of or parts fitted to the particular model or marketing designation of the vehicle as supplied by the manufacturer. Parts available as options, whether at additional cost or not, are not eligible unless otherwise specified. The model represented shall be as specified on the entry form.

2.6 Modifications: Any aspect relating to the construction, modification and/or preparation of the vehicle, which is not specifically authorised in the present regulations, is forbidden. The only work which may be otherwise performed on the car is that necessary for normal servicing or the replacement of parts damaged by wear or accident, or that required under Schedules A, B and C of the CAMS Manual of Motor Sport (refer "General Requirements for Cars and Drivers"). Unless otherwise specified, a part replaced through damage or wear must only be replaced by an original part identical to the previously undamaged one.

3. BODYWORK AND DIMENSIONS

3.1 Strengthening: It is permitted to seam weld the bodyshell/chassis. It is permitted to reinforce the fully sprung components of the bodyshell/ chassis. Such reinforcement material must be in contact with and follow the contour of the original material. It is not permitted to add or incorporate any other components which contribute to the rigidity of the bodyshell, other than the roll over protection structure as described in Article 13.1, and a suspension brace as described in Article 8.7.

3.2 Bumper bars and embellishments: Bumper bars not integral with the coachwork may be removed. External decorative strips, mud flaps and unused brackets may be removed. Registration plates, registration plate mountings and associated lighting components may be removed. Sump guards/splash guards may be removed or added. If sump/splash guards are added and they are in contact with the external airstream, they must be perforated with 50mm diameter holes with centres no more than 150mm apart. No part of any additional or replacement sump/splash guard may extend to the rear of the rearmost point of the engine block as installed in the vehicle.

3.3 Front air dam: It is permitted to fit an airdam to the front of the car, subject to the following restrictions:

(i) No part extends forward of the foremost point of the original vehicle.

(ii) It may be no wider than the coachwork as measured above the centre of the front wheel hubs.

(iii) Undertrays may be installed, including a splitter, and be used as an aerodynamic aid. No part of the undertray/ splitter may extend further rearward than the leading edge of the front tyres, it must not project any further forward than the original bodywork and no wider than the outer edge of the tyres at the wheel hubs, be no lower than the lowest point of the bodywork and remain parallel with the sills. (Tyres must be inflated to a minimum of 1.8 bar of pressure.) Any material which supports or locates the undertray/airdam which extends further rearward that the leading edge of the front tyres must be perforated with minimum 50mm diameter holes with centres no more than 150mm apart.

(iv) On vehicles where the front bumper/fascia is integrated with the coachwork, the airdam may replace the original bumper/fascia provided that the original mounts are retained.

3.4 Rear aerodynamic devices: It is permitted to fit a rear deck spoiler or wing provided that either:

(i) It was supplied as a factory option for that particular model of vehicle or another model of the same family of vehicle. It is permissible to replace one rear aerodynamic device with another complying with the present article, or

(ii) It is within 150mm of the coachwork at all points, and no part extends forward of the rear axle centreline.

(iii) It is a rear wing assembly subject to the following constraints:

(a) It extends no further rearward than the original bodywork (diagram 2B-1, measurement A).

(b) It extends no further forward than 400mm beyond the rear most point of the original coachwork (diagram 2B-1, measurement B).

© Confederation of Australian Motor Sport Ltd. All use subject to Conditions of Use at *www.camsmanual.com.au*

(c) There is only a single wing element having an overall front to rear measurement of no greater than 300mm when measured horizontally (diagram 2B-1, measurement C).
(d) The overall width of the wing assembly must remain within the plan shape of the coachwork.
(e) No part of the wing assembly to be higher than a horizontal line 250 mm above the coachwork at the point of attachment (diagram 2B-1, measurement D).

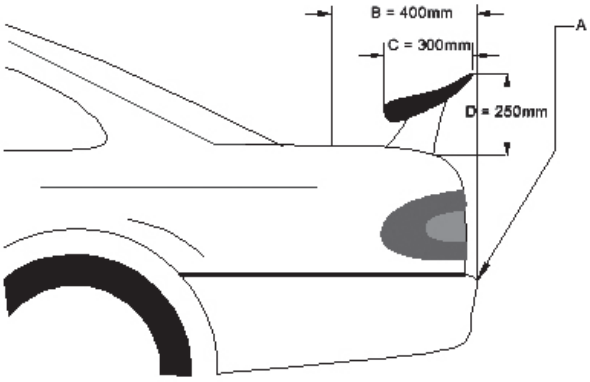

Drawing 2B-1

Notes on Aerodynamic Devices: Any specific part of the car influencing its aerodynamic performance fitted as specified in 3.3 and 3.4 above:

- May not be used for mounting any additional devices or performing any alternative functions other than the channelling of air for cooling purposes.
- Must be rigidly secured to the entirely sprung part of the car (rigidly secured means not having any degree of freedom).
- Must remain in its entirety immobile in relation to the remaining sprung parts of the car. Where an original airdam incorporates a moveable component, such component must be rendered inoperative and be fixed into position.

3.5 Cockpit covering, open vehicles: It is permitted for the cockpit opening of open vehicles to be partially covered by a tonneau cover, able to be removed without the aid of tools.

3.6 Timing device: It is permitted to remove the minimum amount of metal necessary to facilitate fitment of a timing transponder to the upper surface of the cockpit floor.

3.7 Sound deadener: Sound deadener (bitumen and fabric types etc) may be removed from the body shell and hung panels.

3.8 Windscreen, windows and mirrors:

(i) Closed cars: The windscreen must be of laminated glass, unless an original non-glass windscreen is retained, and may incorporate defrosting equipment. Others made from rigid, transparent materials may replace all other windows. Moveable windows may be made fixed and their regulators and associated fittings removed.

(ii) Open cars: All windows and their associated fittings may be removed, including the windscreen and its associated pillars/coachwork. Where an original windscreen is removed, a transparent windscreen with a vertical height of 75mm above the adjacent coachwork must be fitted, extending at least 250mm in width, in front of the driver's seat.

(iii) Rear view mirrors may be replaced or deleted, provided that the provisions of Schedule C (refer "General Requirements for Cars and Drivers") are respected.

3.9 Removable panels: The following panels may be replaced by others of free construction provided that they are of identical external shape save as provide for in 3.10 below:

- All external non-swinging panels which are removable (ie, attached to the bodyshell by bolts or screws).
- The bonnet and the bootlid or rear hatch.
- The outer doorskins. Where the doorskins are replaced, an anti intrusion bar must be fitted as part of the ROPS.
- Steel or plastic dashboards that are affixed by means of bolts or screws.

3.10 Wheel and tyre clearance: It is permitted to flare the external mudguard panels to cover the permitted wheels down to the level of the upper flange (see Group 2F diagram 2). Such flaring must not extend further than 200mm radially from the original wheelarch opening. Inner mudguard skirts/wheel tubs may be modified to provide clearance for the maximum permitted complete wheel. In no instance may the chassis rails, whether separate from or as part of the bodyshell, be modified.

3.11 General: Holes may be drilled for fasteners eg bolts, screws, rivets etc. It is permitted to cut holes of the minimum necessary dimension for the passage of wiring and fuel, brake, oil and intercooler lines/hoses.

© Confederation of Australian Motor Sport Ltd. All use subject to Conditions of Use at *www.camsmanual.com.au*

4. ENGINE

4.1 General: Engine capacity for reciprocating engines may be varied within the limits of the recognised or replacement block; save that the maximum permitted capacity of the engine is 6000cc. Save for the restrictions imposed in Articles 1.4, 4.2, 4.3 and 4.4, the remainder of the engine assembly and associated systems are free.

4.2 Reciprocating engines:

(i) The cylinder head/s must be those that were standard for that particular model. The cylinder head/s may be modified only by the removal of metal.

(ii) The cylinder block may be replaced by another of the same family of block, which is deemed to be one that:

- is from the same manufacturer
- has the same cylinder bore spacing and general configuration.
- retains the same cylinder head bolt positions.

(iii) The cylinder block may be modified only by the removal of metal, whilst retaining the original configuration.

4.3 Rotary engines: The rotor housings and end and intermediate plates must be those that were standard for that particular model. The inlet ports in the end and intermediate plates may be modified by the removal of metal, including bridge-porting, but the original O-ring seals must remain unmodified and in their original location.

4.4 Supercharging:

(i) Supercharging is not permitted unless fitted as standard to the particular model.

(ii) If supercharging is recognised as standard production for the model, the production inlet manifold and supercharging device must be retained as per the manufacturer's design specifications. The boost pressure may be altered. The drive pulleys of a mechanical supercharger may be modified to alter drive speed.

4.5 Oil system: Dry sump systems are permitted. The oil tank must be situated in the luggage compartment where possible or otherwise fully shielded from the cockpit. Oil lines may pass through the cockpit provided they are insulated and there are no joins save those at the front or rear bulkheads.

4.6 Exhaust: For turbosupercharged vehicles the exhaust manifold and turbosupercharger must remain as standard. The complete exhaust system is free downstream of the exit from the turbo housing. For other engine configurations, the exhaust is free from the cylinder head exhaust port. The original exhaust mounting brackets may be removed and additional brackets may be fitted, provided that their sole function is the location of the exhaust.

4.7 Engine mounts: Engine mounts, being components fitted between the cylinder block and chassis/crossmember/bodyshell, are free. The engine may be moved within the constraints of the existing bodywork. Where the engine block fitted is other than the original block or where it is relocated, a scattershield complying with Schedule M (refer "General Requirements for Cars and Drivers") must be fitted.

5. PIPING AND FUEL TANKS

5.1 Fuel tanks:

(i) The fuel tank may be modified or replaced by one of free but safe design; an FIA-approved (FT3 specification) bladder tank is recommended.

(ii) It must be mounted in the same general location, where possible utilising the existing mounting facilities, or in the luggage compartment.

(iii) For all vehicles, a flame and liquid-proof bulkhead must be fitted between all internally mounted fuel system components, save for fuel lines as per 5.3 below, and the driver.

5.2 Tank fillers:

(i) Dry Break fittings are permitted, and must be fitted in compliance with Schedule N (refer "General Requirements for Cars and Drivers"). Tank fillers must not protrude beyond the bodywork unless standard and must be effected in such a way that no fuel spilt in the filling process will leak into the interior compartments of the car.

(ii) Where the existing fuel filler position is retained, the standard filler orifice may be modified to accept a replacement cap of free design.

(iii) Alternatively the filler may be relocated into the luggage compartment; an opening of a maximum 250mm x 250mm may be made in the floor of the luggage compartment for access to underfloor tanks.

NOTE: In all cases, tank fillers must be designed to ensure an efficient closing action which reduces the risk of accidental opening following a crash impact.

5.3 Fuel pumps/filters: Fuel pumps, fittings, and filters are free. Fuel lines must be made from a material suitable for the purpose. Where the fuel lines pass through the cockpit, there must be no connections within the cockpit save at the front and rear bulkheads.

6. COOLING/OIL SYSTEM

6.1 Radiator: The radiator is free. Material may be removed from the radiator support panel to improve the passage of air and for mounting purposes.

6.2 Radiator cowl/shroud: Radiator cowls/shrouds may be removed.

6.3 Engine cooling fans: Engine cooling fans and their control systems are free.

6.4 Oil coolers: Engine oil coolers are free subject to Article 3.4

6.5 Inlet charge air cooling: Where supercharging is used and the system utilises an intercooler, the pipes between

© Confederation of Australian Motor Sport Ltd. All use subject to Conditions of Use at *www.camsmanual.com.au*

the intercooler, manifold and the supercharging device are free but their only purpose must be to channel air.

7. TRANSMISSION TO THE WHEELS

7.1 Gear selection: For all vehicles with other than automatic transmissions, the driver must select all gears via a non-sequential mechanical linkage, unless provided in sequential form by the manufacturer and where the original shift mechanism is retained.

7.2 The gearbox/transaxle and/or final drive assembly may be original, or replaced by another gearbox/transaxle/final drive assembly of which at least 500 examples have been manufactured. The replacement gearbox/transaxle and/or final drive assembly must respect the original mechanical concept (live axle, semi-trailing arm IRS etc) and be located in the same general location as the original.

In all cases, the internal components of the gearbox/transaxle and/or final drive assembly are free, save that the number of forward ratios must not exceed six (6).

The tailshaft and/or driveshaft assemblies and axle shafts are free.

Additional lubricant cooling devices, including fans are permitted. The circulating pump, radiator, and air intake may not be located in the cockpit.

7.3 Clutch: The complete clutch assembly, comprising the pressure plate, clutch plate and flywheel, is free.

7.4 Tailshaft/driveshafts: The tailshaft/driveshafts and associated universal or CV-joints are free.

8. SUSPENSION AND STEERING

8.1 Front suspension components: The suspension components are free, but the original configuration (eg, strut, wishbone, etc) must be retained. The pivot points on the body and crossmember may be relocated. Springs are free provided that the type and location are unchanged (by "type" is meant coil, torsion bar etc.). Spring seats on the bodyshell or suspension components may be made adjustable. Additional springs may be added which are concentric with the suspension dampers.

8.2 Rear suspension components: All rear suspension components, which do not function as a springing medium, are free. Bushings are free. Coil springs are free and may be relocated to be concentric with the suspension damper. Where the rear axle is sprung and located by a leaf rear springs (Hotchkiss), it is permitted to add an additional lateral location device (Watts or Panhard etc.), and one additional longitudinal suspension arm on each side of the vehicle. Such additional components must involve only the addition of metal. The leaf spring may be varied in thickness and number of leaves, and may be supplemented by a coil spring concentric with the suspension damper.

8.3 Bump stops: Bump stops, being the components designed to ultimately limit the suspension travel, are free.

8.4 Suspension dampers: The make and size of suspension dampers are free. The number of dampers and pivot point locations of telescopic dampers on the bodyshell may not be altered. Telescopic dampers may used to replace lever action dampers and the bodyshell/chassis may be locally modified to accommodate the additional pivot points.

8.5 Wheel bearings, hubs and trunnions: Wheel hubs, bearings and trunnions are free.

8.6 MacPherson strut top mounts: MacPherson strut top mounts are free providing that they utilise the standard bodyshell mounting facilities.

8.7 Suspension brace: A brace of free design may be fitted between the upper suspension pivot points on either side of the longitudinal centreline of the vehicle providing s that the anchorage point of the brace is within 100mm of the suspension pivot point.

8.8 Anti-sway bars: Anti-sway bars and the mounting points and linkages between the anti sway bar and suspension components or bodyshell may be added or replaced freely.

8.9 Ride height adjustment: Adjustable spring platforms, rear leaf spring shackles, spacers located directly at either end or between coil springs, lowering blocks of solid/rigid material and torsion bar ride height adjusters are all free.

8.10 Wheel track: The front and rear track dimensions may be increased by a maximum of 100mm. Track extenders or spacers may be used provided that they are fixed to the wheel hub.

8.11 Ride height: All fully sprung parts of the car must clear the ground when both tyres on the same side of the vehicle are deflated.

8.12 Steering and wheel alignment: The steering tie rod ends may be replaced freely. The wheel alignment settings are free.

9. BRAKES

9.1 Master cylinders: Power boosters, master cylinders and associated pushrods, fluid lines and hoses are free. The position of replacement master cylinders is free and holes of the minimum necessary dimensions may be made in existing panels to facilitate such fitment. Brake proportioning valves are free. Anti lock brake systems may be removed or deactivated.

9.2 Brake rotors: The original brake rotors may be replaced. Such replacements may be of free design providing that they are made from a ferrous material. Discs may be interchanged with drums. Disc mounting hats are free subject to their being made from aluminium alloy or ferrous material.

9.3 Brake callipers: Brake callipers and pads are free, subject to the main housing being made of a ferrous material or an aluminium alloy. Titanium pistons are permitted. Where freedom is not otherwise granted, suspension components may be modified to permit fitment of replacement callipers.

9.4 Handbrake: The handbrake is free.

© Confederation of Australian Motor Sport Ltd. All use subject to Conditions of Use at *www.camsmanual.com.au*

9.5 Brake cooling: Protection shields/stone guards on unsprung components may be added or removed. It is permitted to fit ducting for the passage of air to the brakes provided that it remains within the perimeter of the coachwork when viewed from above and that no bodywork alterations are required.

10. WHEELS AND TYRES

10.1 Wheels: Wheels are free. The maximum total rim width for the vehicle racing weight is given in the table below:

Racing Weight	Maximum Total Rim Width
up to 1100kg	40”
above 1100kg	44”

The spare wheel, jack and any associated brackets may be removed.

10.2 Tyres: Tyres are free provided that they are fitted onto a rim in compliance with Schedule E (refer “General Requirements for Cars and Drivers”).

11. ELECTRICAL

11.1 Electrical system: The wiring and electrical connectors, switches, fuses and circuit breakers, starting, ignition and generating systems are free. Number plate lights and side indicator repeater lamps may be removed. The starting, lighting and turn signalling apparatus must be in working order at the start of each competition. All globes must at least meet the original equipment specification.

11.2 Battery: The battery and its location are free but it must be safely and securely mounted. It must be adequately covered so as to prevent short circuits and leakage, in any position. Where the battery is relocated, the original battery mount may be removed.

11.3 Windscreen wipers: The windscreen wiper mechanism may be removed where the windscreen is removed. Where retained, the tension springs and wiper arms may be modified. Wind deflectors may be added. Headlight and rear window wipers and washers may be removed. The windscreen washer bottle, pump and hoses and any mounting bracket are free.

11.4 Retractable headlights: Retractable headlights may be removed provided the opening is covered with fixed panels. In such cases headlight globes may be mounted behind the existing front indicator or driving light lens (the lens being made of clear material). The indicator function may be provided by a mechanism allowing either this globe to flash, or alternately be provided by side repeater indicator lighting.

12. COCKPIT/DRIVER’S COMPARTMENT

12.1 Steering wheel: The steering wheel may be replaced by one of at least 300mm diameter. It is permitted to add a steering wheel boss, possibly incorporating a quick release mechanism, to enable the fitment of a permissible steering wheel. The steering column may be repositioned by the addition of spacers/longer bolts at the existing rear mounting points provided no other modifications are required.

12.2 Controls: All driving controls must retain the role laid down for them by the manufacturer. Footrests and heat protection panels may be added to the driver’s footwell cavity. Pedals and pedal boxes are free, but the radial location of the pedal axes must remain within 75mm of the original.

12.3 Instruments: Instruments are free. Any holes in the dash resulting from the removal of instruments must be neatly closed by the addition of a closing panel. Where possible, all replacement instruments must be mounted in the dash where the original instruments were situated, but may otherwise be mounted in a panel in front of the original dash.

12.4 Carpet and interior trim: The following items may be removed from the interior of the vehicle:

- Roof lining and interior trim.
- Consoles on the transmission tunnel and which are not integrated with the dash assembly
- Floor carpet and associated –underfelt.

Note: Where the interior trim is removed, any opening which may allow entry of parts of the driver’s body or clothing must be closed with a flat panel.

12.5 Seats: The driver’s seat may be replaced with another seat in compliance with Schedule C (refer “General Requirements for Cars and Drivers”). Original seat mounting brackets may be removed or replaced and/or other mountings added provided that they extend no further than 50mm from the plan view of the seat. The passenger’s seat, and rear seats (where fitted) and associated seat belts are free.

12.6 Removable rear window shelf: The removable rear window shelf in two volume cars may be removed together with its supports, or held down by additional fasteners.

12.7 Heater: All components solely associated with the heating, air conditioning and ventilation system are free. Any openings created by the removal of ducting, vents and controls from the dash must be closed by the addition of panels, which may be used to mount additional instruments or controls.

12.8 Accessories: The radio, aerial, speakers and speaker mounts may be removed. Fog/driving lights, which are separate from the main lighting system, may be removed, as may internal cockpit lights. Accessories that do not increase performance (eg, additional lamps, mirrors, etc.) may be added.

© Confederation of Australian Motor Sport Ltd. All use subject to Conditions of Use at *www.camsmanual.com.au*

13. SAFETY STRUCTURES

13.1 Roll over protection structures: Roll over protection structures must comply with Schedule J (refer "General Requirements for Cars and Drivers") save that in closed cars a ROPS complying with the prescriptions of drawing 259-3 will be acceptable. Open cars must comply with at least the prescriptions of drawing 259-1. It is permitted to attach parts of the safety cage to the interior of the passenger compartment, either by welding or bolting. The removal of the minimum amount of upholstery to assist the fitment of the safety cage members is permitted.

14. FUEL

14.1 Fuel: Only fuel as defined by CAMS in Schedule G (see "General Requirements for Cars and Drivers"), may be used.

14.2 Air: Only air may be mixed with the fuel as an oxidant.

© Confederation of Australian Motor Sport Ltd. All use subject to Conditions of Use at *www.camsmanual.com.au*