AUTO TEST

Group 4H – Motorkhana Cars

1. ALL VEHICLES

1.1 must comply with Schedule A;

1.2 shall have road wheels of not less than 10" nominal diameter;

1.3 (except for vehicles entered in a class solely for Production Four-Wheel Drive Vehicles) shall have not more than two driven wheels;

1.4 shall have not more than two steered wheels, save for production vehicles originally equipped with four-wheel steering;

1.5 shall be fitted with tyres on all wheels which:

(i) are pneumatic, containing gas only;

(ii) are in a safe condition. This does not prohibit tyres without tread pattern, but any such tyres will be subject to close examination by the scrutineers;

(iii) are not fitted with any anti-skid attachments such as studs, chains etc;

(iv) if the event is conducted on an unsealed surface, the organisers may by a statement in the Supplementary Regulations restrict the types of tyres admissible to the event. The types of tyres which may be so prohibited are winter tread, bar-tread, mud-and-snow and hand-cut patterns;

1.6 shall carry competition numbers;

1.7 shall be adequately muffled so as to limit noise emission to a maximum of 95 dB(A) when tested in accordance with the CAMS-specified method (see Schedule B, Article 12 – refer "General Requirements for Cars and Drivers" in the CAMS Manual of Motor Sport);

1.8 shall be scrutineered for safety and for vehicle eligibility before taking part in an event, including practice. Special attention will be paid to brakes, steering and tyres;

1.9 shall conform to acceptable standards of condition and of presentation.

1.10 Roll over protection is not compulsory for vehicles other than those outlined in Articles 3, 4 and 5 of Group 4H when competing in motorkhanas. However, should roll over protection be fitted to a vehicle, the structure must comply with Schedule J (refer "General Requirements for Cars and Drivers").

1.11 All exposed rotating parts on the engine are to be guarded for walk-up protection.

2. PRODUCTION VEHICLES

2.1 Production vehicles are road going vehicles that have been manufactured or fabricated in a production run and sold to the public. Vehicles may be modified, but if in the areas listed below, the restrictions must be adhered to:

2.2 Original body shell must be retained. The overall length and silhouette must not be less than the original. Spoilers, air dams and wheel arch flares may be added.

2.3 Engine, firewall and front seats must remain in their original location.

2.4 Body panels may be of a different material to a production part.

2.5 Interior trim such as door trim (except both front doors) or carpet etc may be removed. If a roll cage is fitted, the rear passenger seats may be removed.

2.6 All lighting equipment must be in place (eg, headlights, tail lights) but not necessarily in working order (competitors responsibility if road registered).

2.7 The handbrake may be modified, but must work equally on both rear wheels.

2.8 Racing slicks, racing retreads and tyres marked "not for road use" or "racing purposes only" are prohibited.

2.9 The weight of the vehicle must not be less than 95% of the specified kerb weight for the vehicle. Windows may not be removed unless replaced with an alternate material.

Classes for production cars (based on manufacturers' specifications) shall be:

Class A	2WD, wheelbase up to 2150mm
Class B	2WD, wheelbase 2151 - 2390mm
Class C	2WD, wheelbase 2391 - 2574mm
Class D	2WD, wheelbase 2575mm and over
Class E	4WD vehicles (which must be driven in the four-wheel drive mode throughout the competition)

3. SPECIALS

Specials are either:

3.1 Purpose-built vehicles, which must:

(i) have a wheel base not less than 1800mm;

(ii) be of sound and solid construction;

(iii) be fitted with some form of protection between the engine and driver's compartment suitable and sufficient to prevent the passage of flame;

(iv) be fitted with a solid and rigidly attached floor, and covers of solid material which effectively separate the passenger compartment from the exhaust system, the transmission shaft/s and joints, the brakes, the road wheels and their attachments and linkages;

(v) have sides on the passenger compartment extending at least from the toe-board to the rear of the seat/s, contiguous with the floor throughout their length, of a height not less than 150mm above all parts of the uncompressed seat cushion/s;

(vi) be fitted with a securely attached driver's seat;

(vii) **Important note:** Specials that are intended to be used in events other than motorkhana, and have roll over protection installed, may not employ any of the exemptions/differences to Schedule J (refer "General Requirements for Cars and Drivers") outlined below, and must comply with the full requirements for that form of motor sport.

Specials must be fitted with a roll over protection structure (ROPS) complying with Schedule J or the following requirements:

For vehicles of up to 500kg and/or with a chassis width equal to or less than 750mm (measured at the widest point of the roll bar).

(a) Minimum of a Type 1, Solo Roll Bar as defined by Schedule J. As an alternative to the single brace design illustrated, two braces may be employed, which must be fitted not more than 300mm from the top of the main roll bar (refer Diagram 1). All braces must be straight. More extensive structures of a design outlined in Schedule J are permitted.

(b) The roll over protection structure must be constructed of mild steel of circular cross section, with a minimum yield strength of 250MPa. Alternatively, the structure may be constructed of a material specified in Schedule J.

Component	Outside Diameter	Wall Thickness
Main Hoop	30mm min	1.5mm min
All Other Components	25mm min	1.5mm min

(c) The entirety of the main roll bar must be behind the driver's helmet (no minimum or maximum distance is specified) when viewed from the side and the driver is seated in the normal driving position.

(d) Minimum of 50mm clearance is to be maintained above the driver's helmet (for all drivers of the vehicle) when measured perpendicular to an illusory line drawn from the top of the main roll bar to the top of the engine (not including peripherals such as carburettors) or alternatively the chassis at the front of the vehicle. Refer diagram 1.

(e) The roll over protection structure must be mounted to the vehicle in accordance with Article 3.2.2 of Schedule J.

Diagram 1

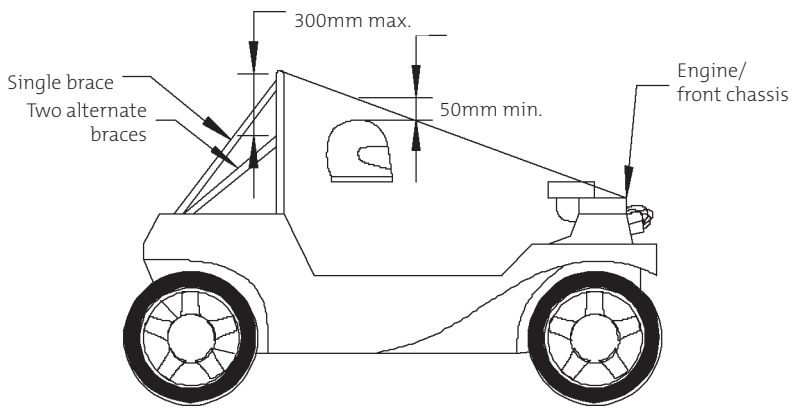

Specials over 500kg and/or with a chassis width greater than 750mm (measured as above)

Roll over protection conforming to at least Type 2, half roll cage as defined by Schedule J, must be fitted. The structure must conform in all ways to the specifications outlined in Schedule J;

(viii) notwithstanding the provisions of Schedule I (refer "General Requirements for Cars and Drivers"), be fitted with at least a lap-type seat belt;

(ix) be fitted with a fuel tank safely and securely installed;

(x) have any battery safely and securely installed;

(xi) have all brake, fuel and electrical lines securely mounted;

(xii) not have any open carburettor intake/s intruding into the passenger compartment. The use of flame-retardant air cleaner/s is recommended;

(xiii) have mudguards (if fitted) securely mounted;

(xiv) any form of electronically-controlled traction, braking or suspension control aids are forbidden

or

3.2 Production-based vehicles which have any of the following features:

(i) significantly lightened

(ii) fitted with fiddle brakes

(iii) fitted with a foot brake operating only on the rear wheels

(iv) fitted with racing-type tyres or slick recapped tyres, or any tyre marked "not for highway use", "for racing use only" or similar.

4. MINI MOKES

Mini Mokes shall be fitted with either:

(i) a roll over protection structure (ROPS) to be constructed in accordance with Schedule J (refer "General Requirements for Cars and Drivers"), and be of at least a Type 2 Half Roll Cage,

or alternatively

(ii) the standard original equipment manufacture (OEM) ROPS. The structure must comply with the following material specification:

Component	Outside Diameter	Wall Thickness
Main Hoop	38mm	2.5mm
All Other Braces	30mm	1.5mm

All material is to be mild steel, circular in section, with minimum yield strength of 250 MPa. (**Note:** diagrams available from CAMS.) A Mini Moke utilising the OEM ROPS may be used in Motorkhana competition.

In either case, the diagonal as per diagram 253-3 or 253-4 of Schedule J is recommended, but optional.