GROUP 11C

ENGINE MECHANICAL <3.8L ENGINE>

CONTENTS

GENERAL DESCRIPTION 11C-2

ENGINE DIAGNOSIS 11C-3

SPECIAL TOOLS 11C-4

ON-VEHICLE SERVICE 11C-7
- DRIVE BELT TENSION CHECK AND ADJUSTMENT 11C-7
- VALVE CLEARANCE CHECK AND ADJUSTMENT 11C-12
- ROCKER ARM PISTON OPERATION CHECK 11C-13
- IGNITION TIMING CHECK 11C-14
- CURB IDLE SPEED CHECK 11C-15
- IDLE MIXTURE CHECK 11C-16
- COMPRESSION PRESSURE CHECK 11C-17
- MANIFOLD VACUUM CHECK 11C-19
- LASH ADJUSTER CHECK 11C-19

ENGINE ASSEMBLY 11C-22
- REMOVAL AND INSTALLATION 11C-22

CAMSHAFT OIL SEAL 11C-30
- REMOVAL AND INSTALLATION 11C-30

CAMSHAFT AND VALVE STEM SEAL 11C-32
- REMOVAL AND INSTALLATION 11C-32

OIL PAN AND OIL SCREEN 11C-43
- REMOVAL AND INSTALLATION <M/T> . . 11C-43
- REMOVAL AND INSTALLATION <A/T> . . . 11C-47
- INSPECTION 11C-50

CRANKSHAFT OIL SEAL 11C-51
- REMOVAL AND INSTALLATION <FRONT OIL SEAL> 11C-51
- REMOVAL AND INSTALLATION <REAR OIL SEAL> 11C-53

CYLINDER HEAD GASKET 11C-55
- REMOVAL AND INSTALLATION 11C-55

TIMING BELT 11C-59
- REMOVAL AND INSTALLATION 11C-59
- INSPECTION 11C-64

SPECIFICATIONS 11C-65
- FASTENER TIGHTENING SPECIFICATIONS 11C-65
- SERVICE SPECIFICATIONS 11C-67
- SEALANTS 11C-68

GENERAL DESCRIPTION

M1111000100851

The 6G75 (3.8 L) engine is a six-cylinder engine. The cylinder numbers are assigned as 1-3-5 for the right bank and 2-4-6 for the left bank from the front of the engine (timing belt side). This engine is fired in the order of 1-2-3-4-5-6 cylinders.

ITEMS			SPECIFICATIONS
Type			V type, overhead camshaft
Number of cylinders			6
Bore mm (in)			95.0 (3.74)
Stroke mm (in)			90.0 (3.54)
Total displacement cm^3 (cu. in)			3,828 (233.6)
Compression ratio			10.5
Firing order			1-2-3-4-5-6
Valve timing	Intake valve	Opens (BTDC)	- 2° <Low speed cam A>
			0° <Low speed cam B>
			15° <High speed cam>
		Closes (ABDC)	50° <Low speed cam A>
			52° <Low speed cam B>
			69° <High speed cam>
	Exhaust valve	Opens (BBDC)	57°
		Closes (ATDC)	19°
Lubrication system			Pressure feed, full-flow filtration
Oil pump type			Trochoid type

ENGINE DIAGNOSIS

M1111000700369

SYMPTOMS	PROBABLE CAUSE	REMEDY
Compression is too low	Blown cylinder head gasket	Replace the gasket.
	Worn or damaged piston rings	Replace the rings.
	Worn piston or cylinder	Repair or replace the piston and/or the cylinder block.
	Worn or damaged valve seat	Repair or replace the valve and/or the seat ring
Drop in engine oil pressure	Engine oil level is too low	Check the engine oil level.
	Malfunction of engine oil pressure switch	Replace the engine oil pressure switch.
	Clogged oil filter	Install a new filter.
	Worn oil pump gears or cover	Replace the gears and/or the cover.
	Thin or diluted engine oil	Change the engine oil to the correct viscosity.
	Stuck (opened) oil relief valve	Repair the relief valve.
	Excessive bearing clearance	Replace the bearings.
Engine oil pressure too high	Stuck (closed) oil relief valve	Repair the relief valve.
Noisy valves	Incorrect valve clearance <Intake side>	Adjust valve clearance
	Malfunction of lash adjuster (including entry of air into high pressure chamber) <Exhaust side>	Check the lash adjuster.
	Thin or diluted engine oil (low engine oil pressure)	Change the engine oil.
	Worn or damaged valve stem or valve guide	Replace the valve and/or the guide.
Connecting rod noise/main bearing noise	Insufficient oil supply	Check the engine oil level.
	Thin or diluted engine oil	Change the engine oil.
	Excessive bearing clearance	Replace the bearings.

SPECIAL TOOLS

M1112000600741

TOOL	TOOL NUMBER AND NAME	SUPERSESSION	APPLICATION
A 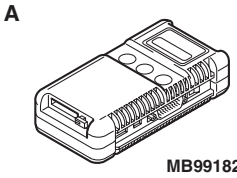 MB991824 B 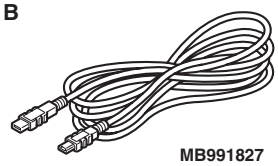 MB991827 C 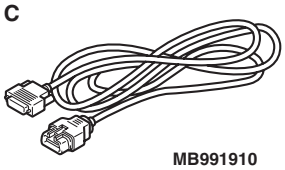 MB991910 D 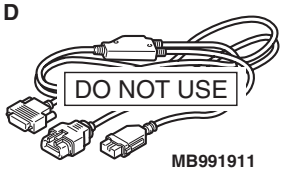 MB991911 E 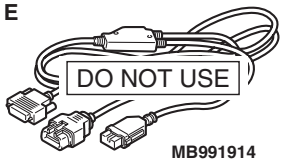 MB991914 F 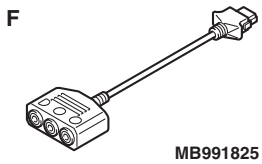 MB991825 G 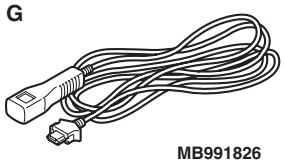 MB991826 MB991958	MB991958 Scan tool (MUT-III sub assembly) A: MB991824 Vehicle communication interface (V.C.I.) B: MB991827 MUT-III USB cable C: MB991910 MUT-III main harness A (Vehicles with CAN communication system) D: MB991911 MUT-III main harness B (Vehicles without CAN communication system) E: MB991914 MUT-III main harness C (for Daimler Chrysler models only) F: MB991825 MUT-III measurement adapter G: MB991826 MUT-III trigger harness	MB991824-KIT *NOTE: G: MB991826 MUT-III Trigger Harness is not necessary when pushing V.C.I. ENTER key.*	• Drive belt tension check • Ignition timing check • Curb idle speed check • Idle mixture check • Erasing the diagnostic trouble code **⚠ CAUTION** **For vehicles with CAN communication, use MUT-III main harness A to send simulated vehicle speed. If you connect MUT-III main harness B instead, the CAN communication does not function correctly.**
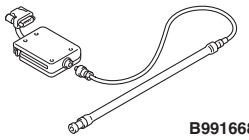 B991668	MB991668 Belt tension meter set	Tool not available	Drive belt tension check [used together with scan tool (MUT-III sub assembly)]

TOOL	TOOL NUMBER AND NAME	SUPERSESSION	APPLICATION
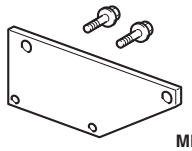 MB992012	MB992012 Engine hanger plate A	General service tool	Supporting the engine assembly
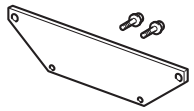 MB992013	MB992013 Engine hanger plate B	General service tool	
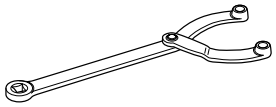 B990767	MB990767 Front hub and flange yoke holder	MB990767-01	Holding the camshaft sprocket
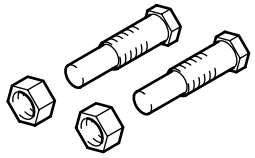	MD998715 Crankshaft pulley holder pin	MIT308239	Holding the camshaft sprocket
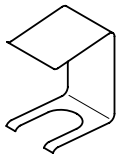 D998443	MD998443 Auto-lash adjuster holder	MD998443-01	Holding the auto-lash adjuster
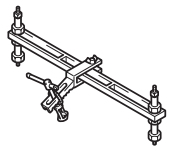 AC204024	MD998772 Valve spring compressor	General service tool	Compressing valve spring
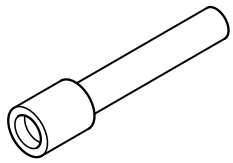	MB991999 Valve stem seal installer	-	Valve stem seal installer
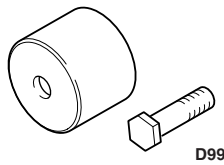 D998713	MD998713 Camshaft oil seal installer	MD998713-01	Press-in of the camshaft oil seal
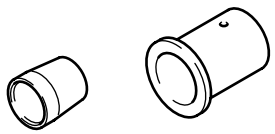	MD998717 Crankshaft front oil seal installer	MD998717-01	Press-in of the crankshaft front oil seal

TOOL	TOOL NUMBER AND NAME	SUPERSESSION	APPLICATION
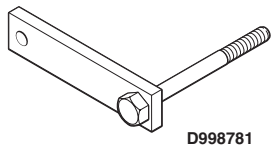 D998781	MD998781 Flywheel stopper	General service tool	Securing the drive plate and flywheel
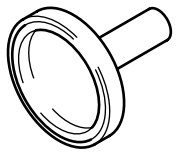	MD998718 Crankshaft rear oil seal installer	MD998718-01	Press-fitting the crankshaft rear oil seal
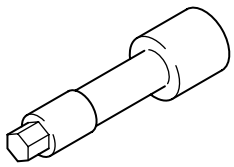	MD998051 Cylinder head bolt wrench	MD998051-01 or General service tool	Cylinder head bolt removal and installation
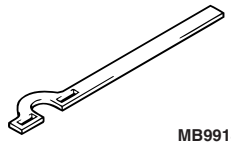 MB991800	MB991800 Pulley holder	MB991800-01	Holding the crankshaft pulley
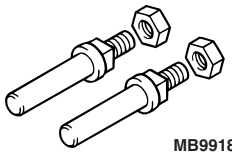 MB991802	MB991802 Pin B	MB991802-01	Holding the crankshaft pulley
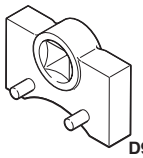 D998767	MD998767 Tension pulley socket wrench	MD998752-01	Timing belt tension adjustment
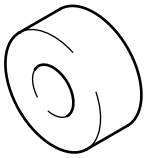	MD998769 Crankshaft pulley spacer	General service tool	Rotating the crankshaft when installing the timing belt

TOOL	TOOL NUMBER AND NAME	SUPERSESSION	APPLICATION
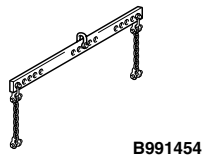	MB991454 Engine hanger balancer	MZ203827-01	When the engine hanger is used: Supporting the engine assembly during removal and installation of the transaxle assembly *NOTE: Special tool MB991454 is a part of engine hanger attachment set MB991453.*
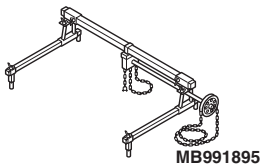	MB991895 Engine hanger	Tool not available	
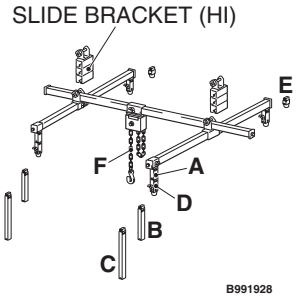	MB991928 Engine hanger A: MB991929 Joint (50) ×2 B: MB991930 Joint (90) ×2 C: MB991931 Joint (140) ×2 D: MB991932 Foot (standard) ×4 E: MB991933 Foot (short) ×2 F: MB991934 Chain and hook assembly	Tool not available	

ON-VEHICLE SERVICE

DRIVE BELT TENSION CHECK AND ADJUSTMENT

M1111003100980

GENERATOR DRIVE BELT TENSION CHECK

WHEN USING SCAN TOOL MB991958

Required Special Tools:

- MB991668: Belt Tension Meter Set
- MB991958: Scan Tool (MUT-III Sub Assembly)
  - MB991824: Vehicle Communication Interface (V.C.I.)
  - MB991910: MUT-III Main Harness A

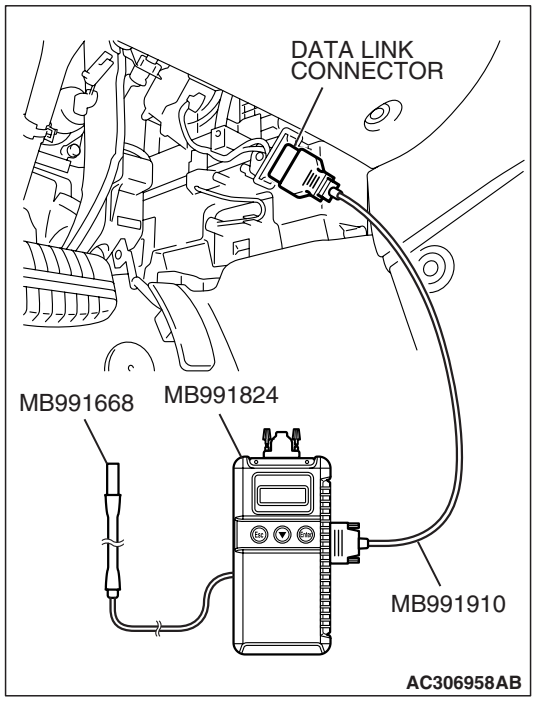

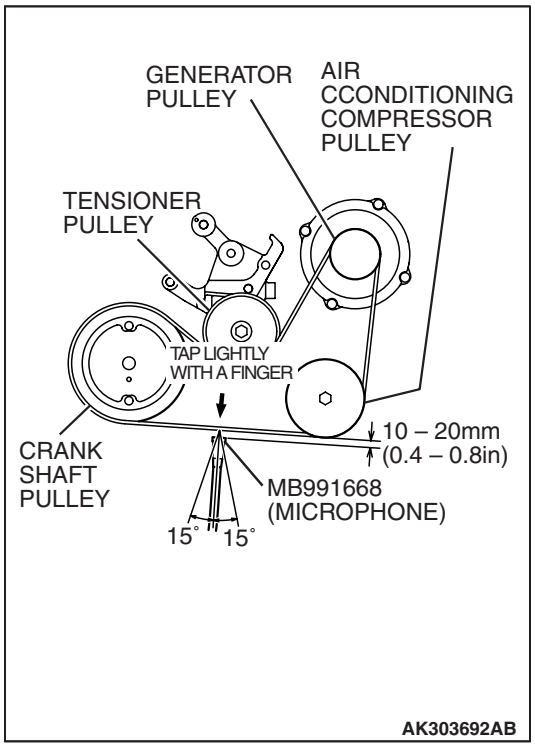

⚠ CAUTION

To prevent damage to scan tool MB991824, always turn the ignition switch to the "LOCK" (OFF) position before connecting or disconnecting scan tool MB991824.

1. Connect special tool MB991668 to scan tool MB991824.
2. Connect scan tool MB991910 to scan tool MB991824.
3. Connect scan tool MB991910 to the data link connector.
4. Turn the ignition switch to the "ON" position and select "Belt Tension" from the menu scan tool MB991824 screen.

⚠ CAUTION

- **The temperature of the surface of the belt should be as close as possible to underhood temperature.**
- **Do not let any contaminants such as water or oil get onto the microphone.**
- **If strong gusts of wind blow against the microphone or if there are any loud sources of noise nearby, the values measured by the microphone may not correspond to actual values.**
- **If the microphone is touching the belt while the measurement is being made, the values measured by the microphone may not correspond to actual values.**
- **Do not take the measurement while the vehicle's engine is running.**

5. Hold special tool MB991668 (microphone) to the middle of the drive belt between the pulleys (at the place indicated by the arrow), about 10 – 20 mm (0.4 – 0.8 inch) away from the rear surface of the belt and so that it is perpendicular to the belt (within an angle of ±15 degree angle).
6. Gently tap the middle of the belt between the pulleys (the place indicated by the arrow) with your finger as shown in the illustration, and check that the vibration frequency of the belt is within the standard value.

   Standard value: 143 – 169 Hz

   NOTE: Because the frequency depends on the belt material, confirm Part No. shown on the reverse of the belt.

WHEN USING THE TENSION GAUGE

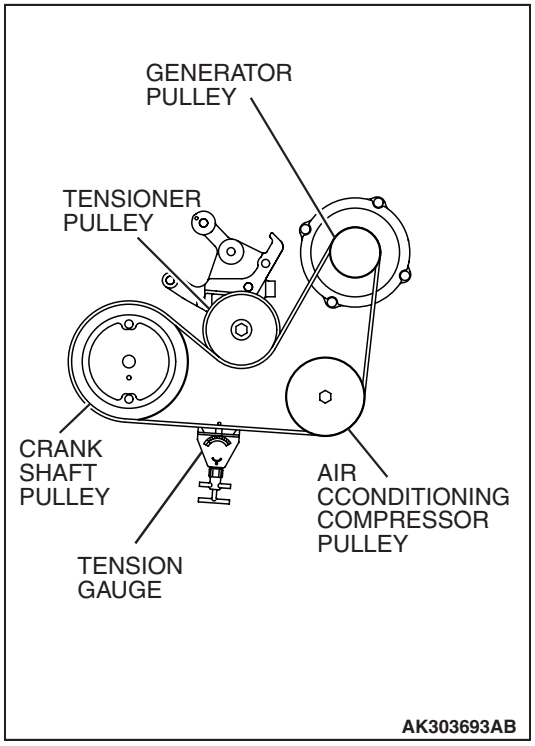

Use a belt tension gauge to check that the belt tension is within the standard value.

Standard value: 490 – 686 N (110 – 154 pounds)

BELT DEFLECTION CHECK

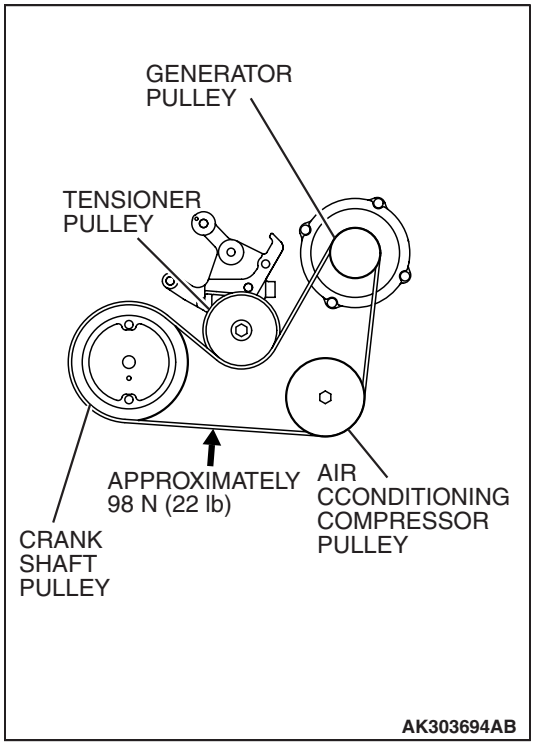

Apply approximately 98 N (22 pounds) of force to the middle of the drive belt between the pulleys (at the place indicated by the arrow) and check that the amount of deflection in within the standard value.

Standard value: 8.4 – 10.7 mm (0.33 – 0.42 inch)

GENERATOR DRIVE BELT TENSION ADJUSTMENT

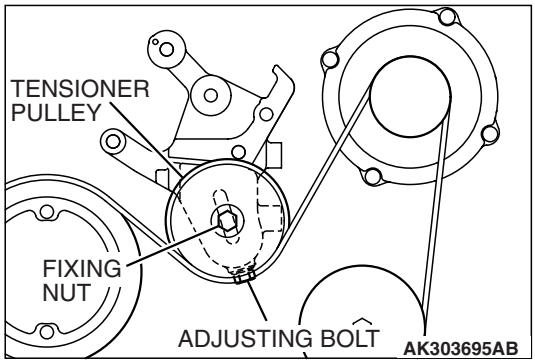

1. Loosen the tensioner pulley fixing nut.
2. With the tensioner pulley fixing nut temporarily tightened to 15 ±5 N· m (11 ±4 ft-lb), set the belt tension or defection amount to the standard value using the adjusting bolt.

   Standard value:

ITEMS	DURING ADJUSTMENT	DURING REPLACEMENT
Vibration frequency Hz	150 –163	180 – 202
Tension N (lb)	539 – 637 (121 – 143)	785 – 981 (176 – 221)
Deflection (Reference value) mm (in)	8.9 – 10.1 (0.35 – 0.40)	6.2 – 7.5 (0.24 – 0.30)

3. Tighten the tension pulley fixing nut.

   Tightening torque: 49 ±10 N· m (36 ±7 ft-lb)

POWER STEERING DRIVE BELT TENSION CHECK

WHEN USING SCAN TOOL MB991958

Required Special Tools:
- MB991668: Belt Tension Meter Set
- MB991958: Scan Tool (MUT-III Sub Assembly)
  - MB991824: Vehicle Communication Interface (V.C.I.)
  - MB991910: MUT-III Main Harness A

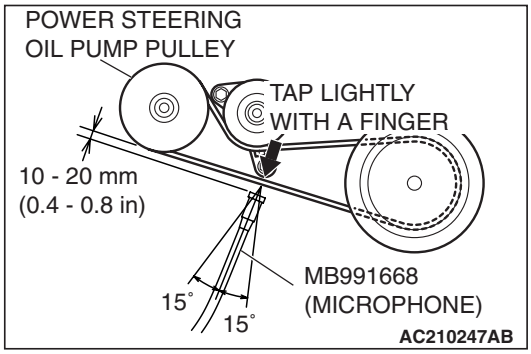

Gently tap the middle of the belt between the pulleys (the location indicated by the arrow) with your finger as shown in the illustration, and check that the vibration frequency of the belt is within the standard value.

NOTE: Refer to for details on the method of measuring the vibration frequency using the scan tool.

Standard value:

ITEM	WHEN CHECKED	DURING ADJUSTMENT	DURING REPLACEMENT
Vibration frequency Hz	124 – 160	134 – 151	160 – 189

WHEN USING A TENSION GAUGE

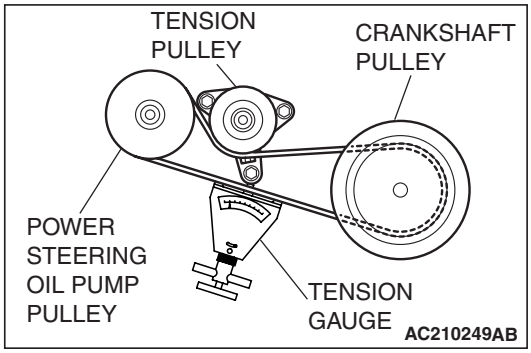

Use a belt tension gauge to check that the belt tension is within the standard value.

Standard value:

ITEM	WHEN CHECKED	DURING ADJUSTMENT	DURING REPLACEMENT
Tension N (lb)	294 – 490 (66 – 110)	343 – 441 (77 – 99)	490 – 686 (110 – 154)

BELT DEFLECTION CHECK

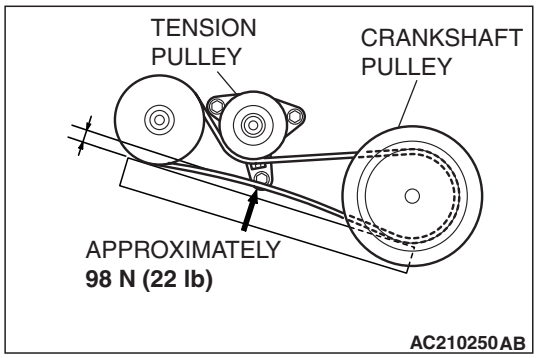

Apply approximately 98 N (22 lb) of force to the middle of the drive belt between the pulleys (at the place indicated by the arrow) and check that the amount of deflection is within the standard value.

Standard value:

ITEM	WHEN CHECKED	DURING ADJUSTMENT	DURING REPLACEMENT
Deflection (Reference value) mm (in)	12.3 – 16.2 (0.48 – 0.64)	13.2 – 15.1 (0.52 – 0.59)	9.6 – 12.3 (0.38 – 0.48)

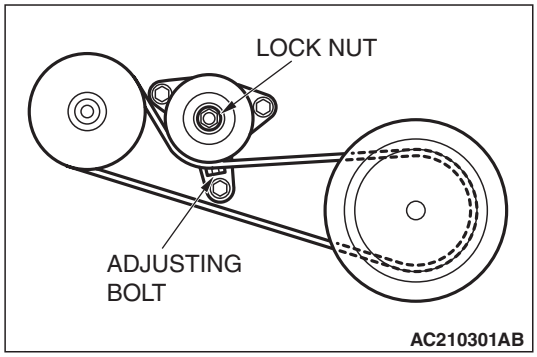

if the tension or deflection is outside the standard value, adjust by the following procedure.

1. Loosen the tensioner pulley lock nut.
2. Adjust the belt tension to the standard value by turning the adjusting bolt. The tension will increase when turning the adjusting bolt clockwise, and decrease when turning counterclockwise.
3. Tighten the lock nut to the specified torque.

   Tightening torque: 49 ±9 N· m (36 ±7 ft-lb)
4. Tighten the adjusting bolt.

   Tightening torque: 5.0 ±1.0 N· m (44 ±9 in-lb)

⚠ CAUTION

Check after turning the crankshaft one or more rotations clockwise.

5. Check the belt deflection amount and tension, and readjust if necessary.

VALVE CLEARANCE CHECK AND ADJUSTMENT

M1111001500409

1. Before checks, check that the engine oil, starter and battery are normal. Also, set the vehicle in the following condition:
   - Engine coolant temperature: 80 – 95° C (176 – 203° F)
   - Lights and all accessories: OFF
   - Transaxle: Neutral (P range on vehicle with A/T)

   NOTE: On vehicles for Canada, the headlight, taillight, etc. remain lit even when the lighting switch is in "OFF" position but this is no problem for checks and adjustment.
2. Remove all of the ignition coils.
3. Remove the rocker cover.
4. Turn the crankshaft clockwise until the notch on the pulley is lined up with the "T" mark on the timing indicator.
5. Move the rocker arms on the No.1 and No.4 cylinders up and down by hand to determine which cylinder has its piston at the top dead center on the compression stroke.

   If both intake and exhaust valve rocker arms have a valve lash, the piston in the cylinder corresponding to these rocker arms is at the top dead center on the compression stroke.
6. Valve clearance inspection and adjustment can be performed on rocker arms indicated by white arrow mark when the No.1 cylinder piston is at the top dead center on the compression stroke, and on rocker arms indicated by black arrow mark when the No.4 cylinder piston is at the top dead center on the compression stroke.
7. Measure the valve clearance for intake side.

   If the valve clearance is not as specified, loosen the rocker arm lock nut and adjust the clearance using a thickness gauge while turning the adjusting screw.

   Standard value (hot engine): 0.20 mm (0.008 inch)

   NOTE: Valve clearance check and adjustment is unnecessary for exhaust side due to auto lash adjuster installed.
8. While holding the adjusting screw with a screwdriver to prevent it from turning, tighten the lock nut to the specified torque.

   Tightening torque: 9 ±1 N· m (80 ±9 in-lb)
9. Turn the crankshaft 360 degrees to line up the notch on the crankshaft pulley with the "T" mark on the timing indicator.
10. Repeat steps (7) and (8) on other valves for clearance adjustment.
11. Install the rocker cover.
12. Install the ignition coils.

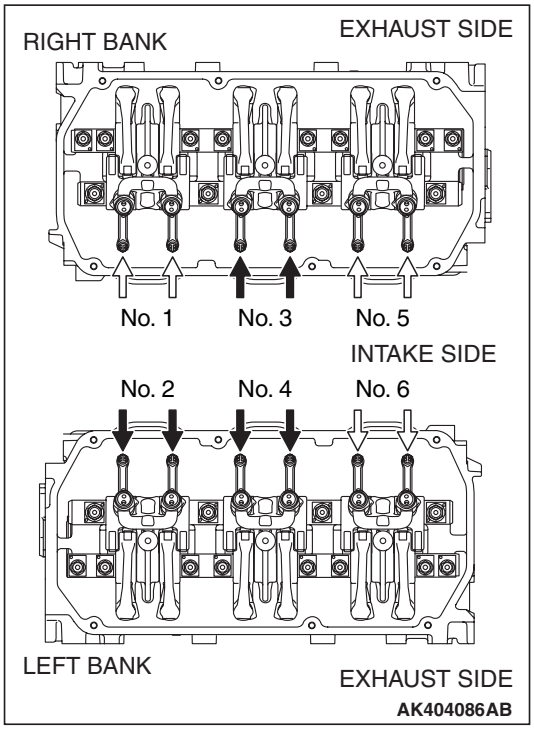

ROCKER ARM PISTON OPERATION CHECK

M1111051000164

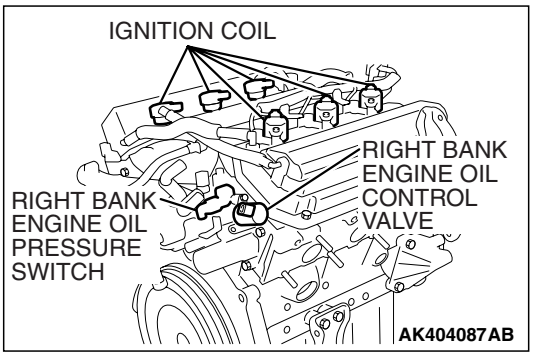

1. Remove all of the ignition coils.
2. Remove the rocker cover.

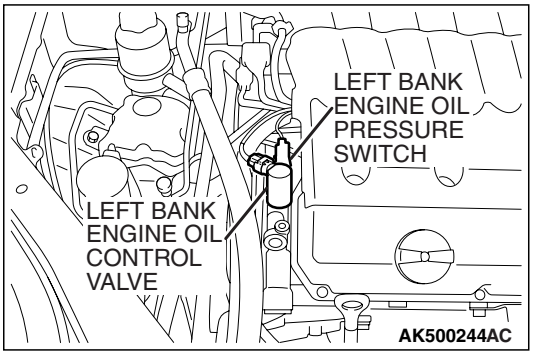

3. Remove the engine oil control valve.
4. Remove the engine oil pressure switch.
5. Turn the crankshaft clockwise until the notch on the crankshaft pulley is lined up with the "T" mark on the lower cover of timing belt.
6. Move the rocker arms on the No.1 and No.4 cylinders up and down by hand to determine which cylinder has its piston at the top dead center on the compression stroke.

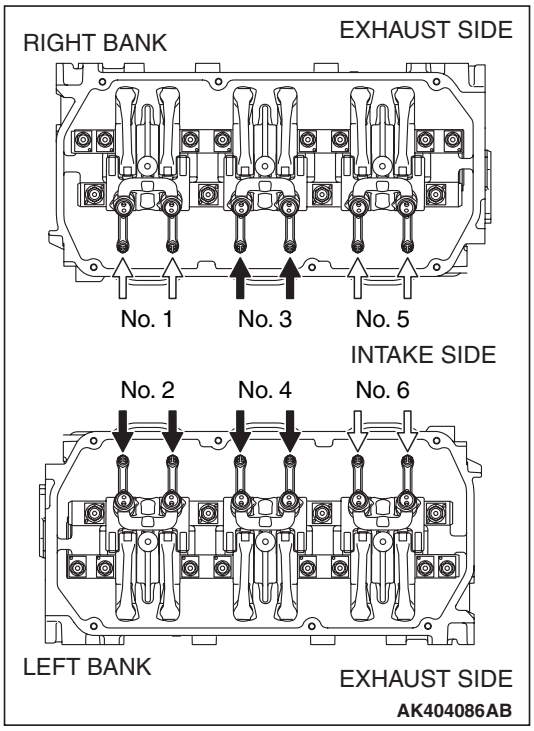

NOTE: The rocker arm piston operation check can be performed on rocker arms indicated by white arrow mark when the No.1 cylinder piston is at the top dead center on the compression stroke, and on rocker arms indicated by black arrow mark when the No.4 cylinder piston is at the top dead center on the compression stroke.

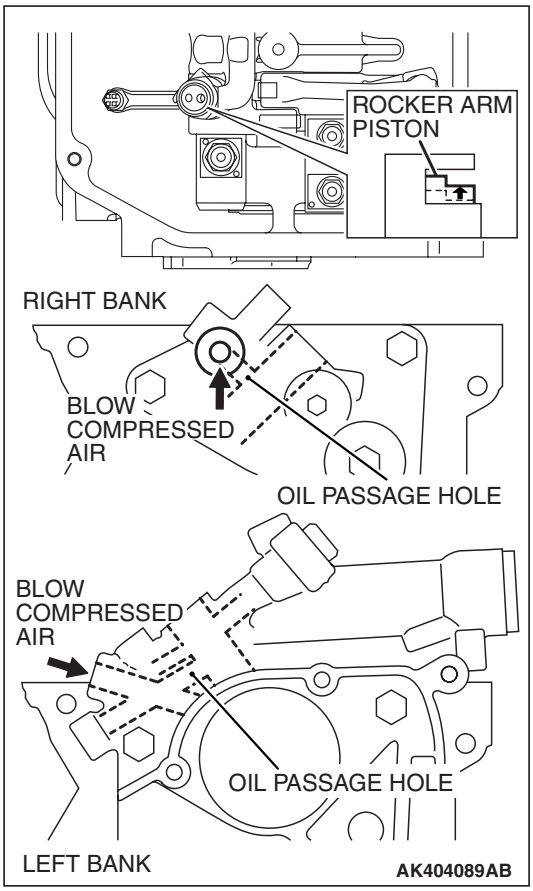

7. While shutting up the oil passage hole at the depth of the engine oil control valve's installation hole by finger not to leak air, blow compressed air into the engine oil pressure switch's installation hole by air blowgun. At this time, confirm that the rocker arm piston can operate.

NOTE: To fully confirm the check, prevent the compression air from leaking as much as possible by installing the O-ring to the end of air blowgun.

8. Turn the crankshaft clockwise until the notch on the crankshaft pulley is lined up with the "T" mark on the lower cover of timing belt.
9. Confirm the rest of the rocker arm pistons under the procedure 7.
10. When the rocker arm piston does not operate, replace the rocker arm assy.
11. Install the engine oil pressure switch and the engine oil control valve. (Refer to Camshaft and Valve Stem Seal – Removal and Installation P.11C-32.)
12. Install the rocker cover.
13. Install all of the ignition coils.

IGNITION TIMING CHECK

M1111001701279

Required Special Tool:

MB991958: Scan Tool (MUT-III Sub Assembly)

- MB991824: V.C.I.
- MB991827: MUT-III USB Cable
- MB991910: MUT-III Main Harness A

1. Before inspection, set the vehicle in the following condition:
   - Engine coolant temperature: 80 – 95° C (176 – 203° F)
   - Lights and all accessories: OFF
   - Transaxle: Neutral (P range on vehicle with A/T)

   NOTE: On vehicles for Canada, the headlight, taillight, etc. remain lit even when the lighting switch is in "OFF" position but this is no problem for checks.

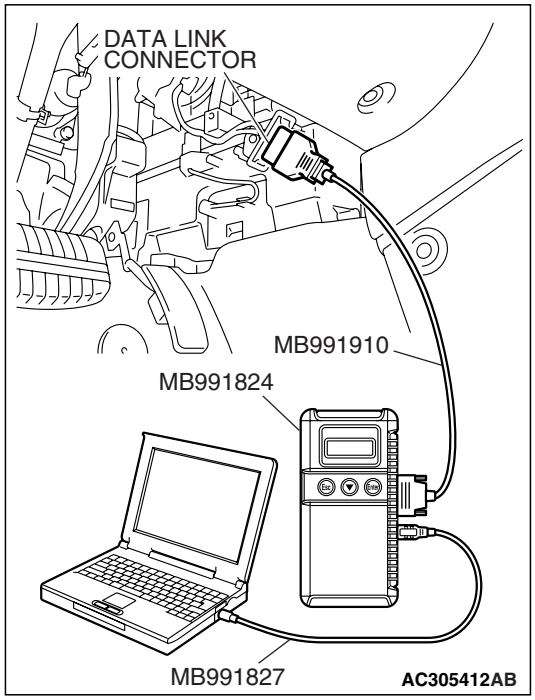

⚠ CAUTION

To prevent damage to scan tool MB991958, always turn the ignition switch to the "LOCK" (OFF) position before connecting or disconnecting scan tool MB991958.

2. Connect scan tool MB991958 to the data link connector.
3. Set the timing light to the power supply line (terminal No. 1) of the ignition coil No. 1.

   NOTE: The power supply line is looped and also longer than the other ones.
4. Start the engine and run it at idle.
5. Check that the idle speed is approximately 680 r/min.
6. Select scan tool MB991958 actuator test "item number 4".
7. Check that basic ignition timing is within the standard value.

   Standard value: 5° BTDC ±3°
8. If the basic ignition timing is not within the standard value, check the following items:
   - Diagnostic output
   - Timing belt cover and crankshaft position sensor installation conditions
   - Crankshaft sensing blade condition

⚠ CAUTION

If the actuator test is not canceled, the forced drive will continue for 27 minutes. Driving in this state could lead to engine failure.

9. Press the clear key on scan tool MB991958 (select forced drive stop mode), and cancel the actuator test.
10. Check that the actual ignition timing is at the standard value.

    Standard value: Approximately 10° BTDC

    NOTE: Ignition timing fluctuates about ± 7° Before Top Dead Center, even under normal operating condition.

    NOTE: It is automatically further advanced by about 5° to 10° Before Top Dead Center at higher altitudes.

CURB IDLE SPEED CHECK

M1111003501163

Required Special Tool:

MB991958: Scan Tool (MUT-III Sub Assembly)
- MB991824: V.C.I.
- MB991827: MUT-III USB Cable
- MB991910: MUT-III Main Harness A

1. Before inspection, set the vehicle in the following condition:
   - Engine coolant temperature: 80 – 95°C (176 – 203°F)
   - Lights and all accessories: OFF
   - Transmission: Neutral (P range on vehicle with A/T)

   NOTE: On vehicles for Canada, the headlight, taillight, etc. remain lit even when the lighting switch is in "OFF" position but this is no problem for checks.

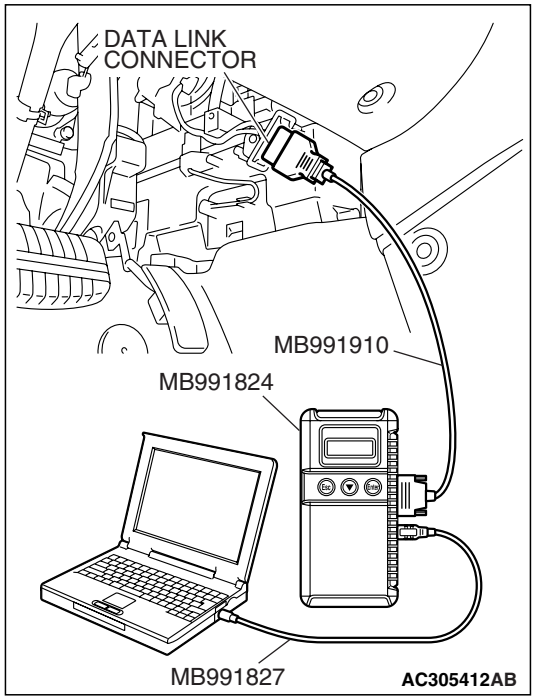

⚠ CAUTION

To prevent damage to scan tool MB991958, always turn the ignition switch to the "LOCK" (OFF) position before connecting or disconnecting scan tool MB991958.

2. Connect scan tool MB991958 to the data link connector.
3. Check the basic ignition timing.

   Standard value: 5° BTDC ±3°

4. Start the engine.
5. Run the engine at idle for 2 minutes.
6. Check the idle speed. Select item number 2 and take a reading of the idle speed.

   Curb idle speed: 680 ±100 r/min

   NOTE: The idle speed is controlled automatically by the idle air control system.

7. If the idle speed is outside the standard value, refer to GROUP 13B, Multiport Fuel Injection (MFI) <3.8L Engine> – Multiport Fuel Injection (MFI) Diagnosis –Symptom Chart P.13B-48.

IDLE MIXTURE CHECK

M1111002100891

Required Special Tool:

MB991958: Scan Tool (MUT-III Sub Assembly)

- MB991824: V.C.I.
- MB991827: MUT-III USB Cable
- MB991910: MUT-III Main Harness A

1. Before inspection, set the vehicle in the following condition:

- Engine coolant temperature: 80 – 95°C (176 – 203°F)
- Lights and all accessories: OFF
- Transmission: Neutral (P range on vehicle with A/T)

NOTE: On vehicles for Canada, the headlight, taillight, etc. remain lit even when the lighting switch is in "OFF" position but this is no problem for checks.

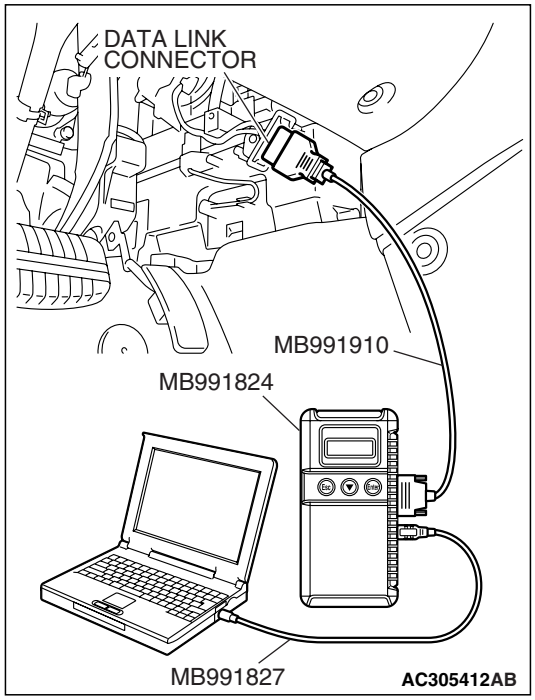

⚠ CAUTION

To prevent damage to scan tool MB991958, always turn the ignition switch to the "LOCK" (OFF) position before connecting or disconnecting scan tool MB991958.

2. Connect scan tool MB991958 to the data link connector.
3. Check that the basic ignition timing is within the standard value.

   Standard value: 5° BTDC ±3°
4. Start the engine and increase the engine speed to 2,500 r/min for 2 minutes.
5. Set the CO, HC tester.
6. Check the CO contents and the HC contents at idle.

   Standard value:
   CO contents: 0.5% or less
   HC contents: 100 ppm or less
7. If the CO and HC contents do not remain inside the standard value, check the following items:

   NOTE: Replace the catalytic converter when the CO and HC contents do not remain inside the standard value, even though the result of the inspection is normal for all items.

- Diagnostic output
- Closed-loop control (When the closed-loop control is carried out normally, the output signal of the heated oxygen sensor changes between 0 – 400 mV and 600 – 1,000 mV at idle.)
- Fuel pressures
- Injector
- Ignition coil, spark plug
- EGR system and EGR valve leak
- Evaporative emission system
- Compression pressure

COMPRESSION PRESSURE CHECK

M1111002601349

Required Special Tool:

MB991958: Scan Tool (MUT-III Sub Assembly)
- MB991824: V.C.I.
- MB991827: MUT-III USB Cable
- MB991910: MUT-III Main Harness A

1. Before inspection, check that the engine oil, starter and battery are normal. Also, set the vehicle in the following condition:

- Engine coolant temperature: 80 – 95° C (176 – 203° F)
- Lights and all accessories: OFF
- Transmission: Neutral (P range on vehicle with A/T)

   NOTE: On vehicles for Canada, the headlight, taillight, etc. remain lit even when the lighting switch is in "OFF" position but this is no problem for checks.
2. Remove all of the ignition coils and spark plugs.

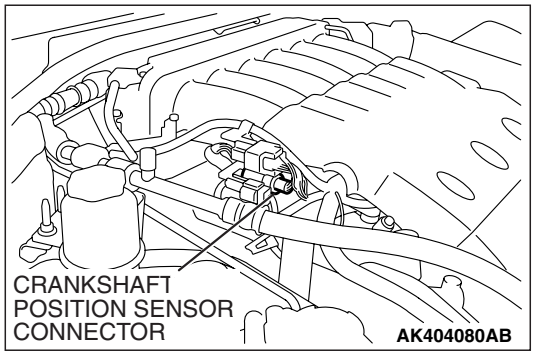

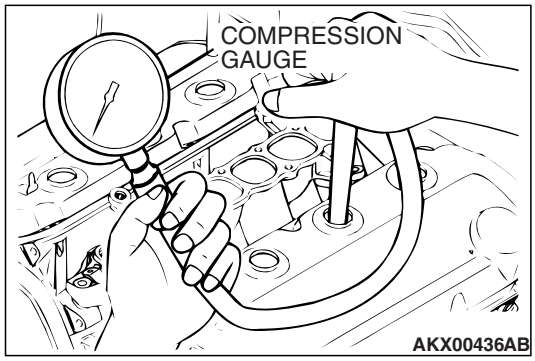

3. Disconnect the crankshaft position sensor connector.

   NOTE: Doing this will prevent the engine control module from carrying out ignition and fuel injection.

⚠ WARNING

Keep your distance from the spark plug hole when cranking. Oil, fuel, etc., may spray out from the spark plug hole and may cause serious injury.

4. Cover the spark plug hole with a shop towel etc., during cranking. After the engine has been cranked, check for foreign material adhering to the shop towel.
5. Set compression gauge to one of the spark plug holes.
6. Crank the engine and measure the compression pressure.

   Standard value (at engine speed of 200 r/min): 1,550 kPa (225 psi)

   Minimum limit (at engine speed of 200 r/min): 1,110 kPa (161 psi)

7. Measure the compression pressure for all the cylinders, and check that the pressure differences of the cylinders are below the limit.

   Limit: 98 kPa (14 psi)

8. If there is a cylinder with compression or a compression difference that is outside the limit, pour a small amount of engine oil through the spark plug hole, and repeat the operations in steps 6 to 8.
   (1) If the compression increases after oil is added, the cause of the malfunction is a worn or damaged piston ring and/or cylinder inner surface.
   (2) If the compression does not rise after oil is added, the cause is a burnt or defective valve seat, or pressure is leaking from the gasket.
9. Connect the crankshaft position sensor connector.
10. Install the spark plugs and ignition coils.

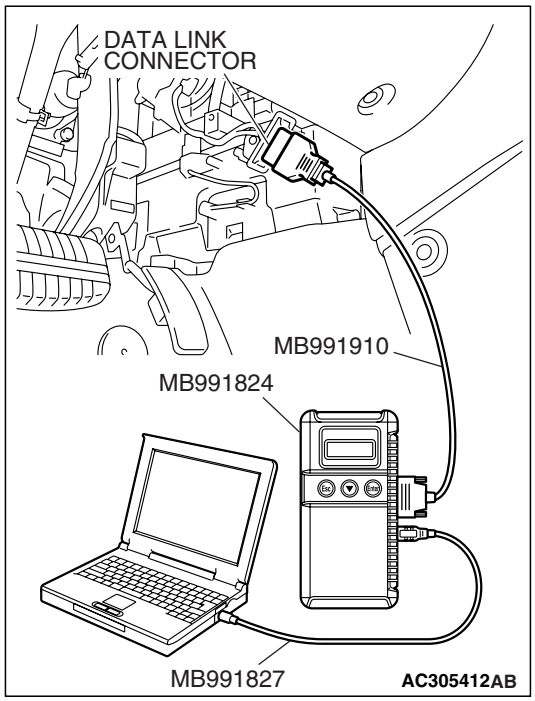

11. Use the scan tool MB991958 to erase the diagnostic trouble codes.

    NOTE: This will erase the diagnostic trouble code resulting from the crankshaft position sensor connector being disconnected.

MANIFOLD VACUUM CHECK

M1111002700989

1. Start the engine and allow it to warm up until the temperature of the engine coolant reaches 80 – 95° C (176 – 203° F).
2. Connect an engine tachometer.
3. Disconnect the ventilation hose from the positive crankcase ventilation (PCV) valve, and connect a vacuum gauge to the ventilation hose.
4. Plug the PCV valve.
5. Start the engine and check that idle speed is within specification. Then check the vacuum gauge reading.

   Idle speed: 680 ±100 r/min

   Minimum limit: 60 kPa (18 in Hg)

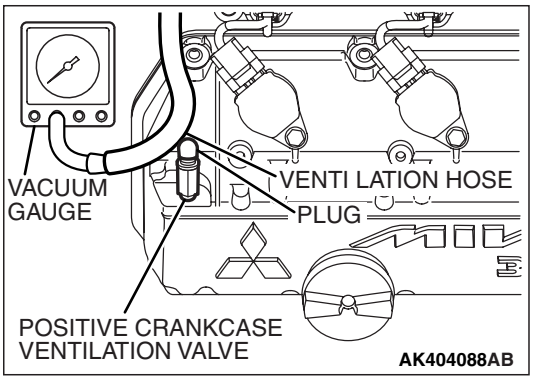

LASH ADJUSTER CHECK

M1111002900648

If an abnormal noise (chattering noise) suspected to be caused by malfunction of the lash adjuster is produced immediately after starting the engine and does not disappear, perform the following check.

NOTE: The lash adjuster is installed in exhaust side only.

NOTE: An abnormal noise due to malfunction of the lash adjuster is produced immediately after starting the engine and changes with the engine speed, irrespective of the engine load.

If, the abnormal noise is not produced immediately after starting the engine or does not change with the engine speed, or it changes with the engine load, the lash adjuster is not the cause for the abnormal noise.

NOTE: When the lash adjuster is malfunctioning, the abnormal noise is rarely eliminated by continuing the warming-up of the engine at idle speed.
However, the abnormal noise may disappear only when seizure is caused by oil sludge in the engine whose oil is not maintained properly.

1. Start the engine.
2. Check if the abnormal noise produced immediately after starting the engine, changes with the change in the engine speed.
   If the abnormal noise is not produced immediately after starting the engine or it does not change with the engine speed, the lash adjuster is not the cause for the noise. Therefore, investigate other causes. The abnormal noise is probably caused by some other parts than the engine proper if it does not change with the engine speed. (In this case, the lash adjuster is in good condition.)
3. With the engine idling, change the engine load (shift from N to D range, for example) to make sure that there is no change in the level of abnormal noise.
   If there is a change in the level of abnormal noise, suspect a tapping noise due to worn crankshaft bearing or connecting rod bearing (In this case, the lash adjuster is in good condition.).
4. After completion of warm-up, run the engine at idle to check for abnormal noise.
   If the noise is reduced or disappears, clean the lash adjuster (Refer to GROUP 11D, Engine Overhaul <3.8L Engine> – Rocker Arms and Camshaft – Inspection P.11D-31). As it is suspected that the noise is due to seizure of the lash adjuster. If there is no change in the level of the abnormal noise, proceed to step 5.
5. Run the engine to bleed the lash adjuster system (Refer to P.11C-20.).
6. If the abnormal noise does not disappear after air bleeding operation, clean the lash adjuster (Refer to GROUP 11D, Engine Overhaul <3.8L Engine> – Rocker Arms and Camshaft –Inspection P.11D-31).

Bleeding lash adjuster system

NOTE: Parking the vehicle on a grade for a long time may decrease oil in the lash adjuster, causing air to enter the high pressure chamber when starting the engine.

NOTE: After parking for many hours, oil may run out from the oil passage and take time before oil is supplied to the lash adjuster, causing air to enter the high pressure chamber.

NOTE: In the above cases, abnormal noise can be eliminated by bleeding the lash adjuster system.

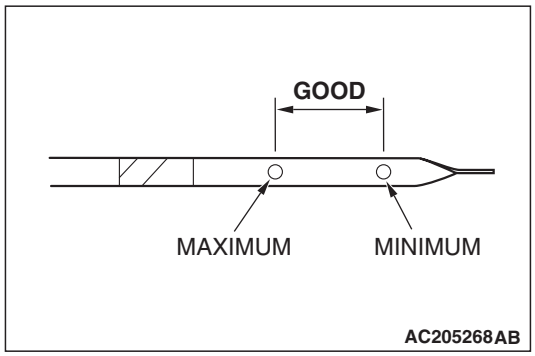

1. Check engine oil and add or change oil if required.

   NOTE: If the engine oil level is low, air is sucked from the oil screen, causing air to enter the oil passage.

   NOTE: If the engine oil level is higher than specification, oil may be stirred by the crankshaft, causing oil to be mixed with a large quantity of air.

   NOTE: If oil is deteriorated, air is not easily separated from oil, increasing the quantity of air contained in oil.

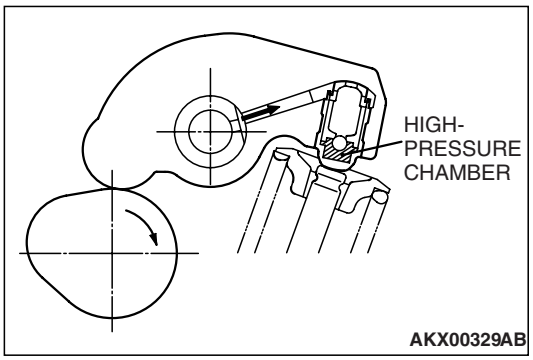

   NOTE: If air mixed with oil enters the high pressure chamber inside the lash adjuster from the above causes, air in the high pressure chamber is compressed excessively while the valve is opened, resulting in an abnormal noise when the valve closes. This is the same phenomenon as that observed when the valve clearance has become excessive. The lash adjuster can resume normal function when air entered the lash adjuster is removed.

2. Idle the engine for one to three minutes to warm it up.
3. Repeat the operation pattern, shown in left figure, at no load to check for abnormal noise. (Usually the abnormal noise is eliminated after repetition of the operation 10 to 30 times. If, however, no change is observed in the level of abnormal noise after repeating the operation more than 30 times, suspect that the abnormal noise is due to some other factors.)
4. After elimination of abnormal noise, repeat the operation shown in left figure five more times.
5. Run the engine at idle for one to three minutes to make sure that the abnormal noise has been eliminated.

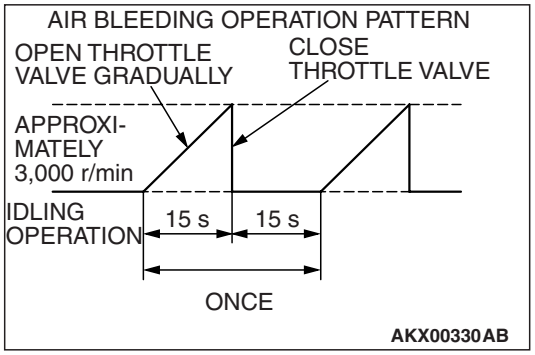

ENGINE ASSEMBLY

REMOVAL AND INSTALLATION

M1112001001875

⚠ CAUTION

- **When the engine assembly replacement is performed, use scan tool MB991958 to initialize the learning value (Refer to GROUP 00, Initialization Procedure for Learning Value in MFI Engine P.00-30).**
- ***: indicates parts which should be temporarily tightened, and then fully tightened with the engine weight applied on the vehicle body.**

Pre-removal Operation	Post-installation Operation
• Under Cover Removal (Refer to GROUP 51, Under Cover P.51-8). • Fuel Line Pressure Reduction [Refer to GROUP 13B, On-vehicle Service –Fuel Pump Relay Disconnection (How to Reduce Pressurized Fuel Lines) P.13B-1283]. • Engine Coolant Draining (Refer to GROUP 14, On-vehicle Service –Engine Coolant Replacement P.14-22). • Engine Oil Draining (Refer to GROUP 12, On-vehicle Service –Engine Oil Replacement P.12-3). • Hood Removal (Refer to GROUP 42, Hood P.42-7). • ECM <M/T> or PCM <A/T> Removal (Refer to GROUP 13B, Engine Control Module (ECM) and Powertrain Control Module (PCM) P.13B-1295). • Air Cleaner Removal (Refer to GROUP 15, Air Cleaner P.15-5). • Front Exhaust Pipe Removal (Refer to GROUP 15, Exhaust Pipe and Main Muffler P.15-24). • Strut Tower Bar Removal (Refer to GROUP 42, Strut Tower Bar P.42-12). • Battery, Battery Tray and Battery Bracket Removal	• Right Bank Exhaust Manifold Installation (Refer to GROUP 15, Exhaust Manifold P.15-19). • Battery, Battery Tray and Battery Bracket Installation • Strut Tower Bar Installation (Refer to GROUP 42, Strut Tower Bar P.42-12). • Front Exhaust Pipe Installation (Refer to GROUP 15, Exhaust Pipe and Main Muffler P.15-24). • Air Cleaner Installation (Refer to GROUP 15, Air Cleaner P.15-5). • ECM <M/T> or PCM <A/T> Installation (Refer to GROUP 13B, Engine Control Module (ECM) and Powertrain Control Module (PCM) P.13B-1295). • Hood Installation (Refer to GROUP 42, Hood P.42-7). • Drive Belt Tension Check (Refer to P.11C-7). • Engine Oil Refilling (Refer to GROUP 12, On-vehicle Service –Engine Oil Replacement P.12-3). • Engine Coolant Refilling (Refer to GROUP 14, On-vehicle Service –Engine Coolant Replacement P.14-22). • Fuel Leak Check • Under Cover Installation (Refer to GROUP 51, Under Cover P.51-8).

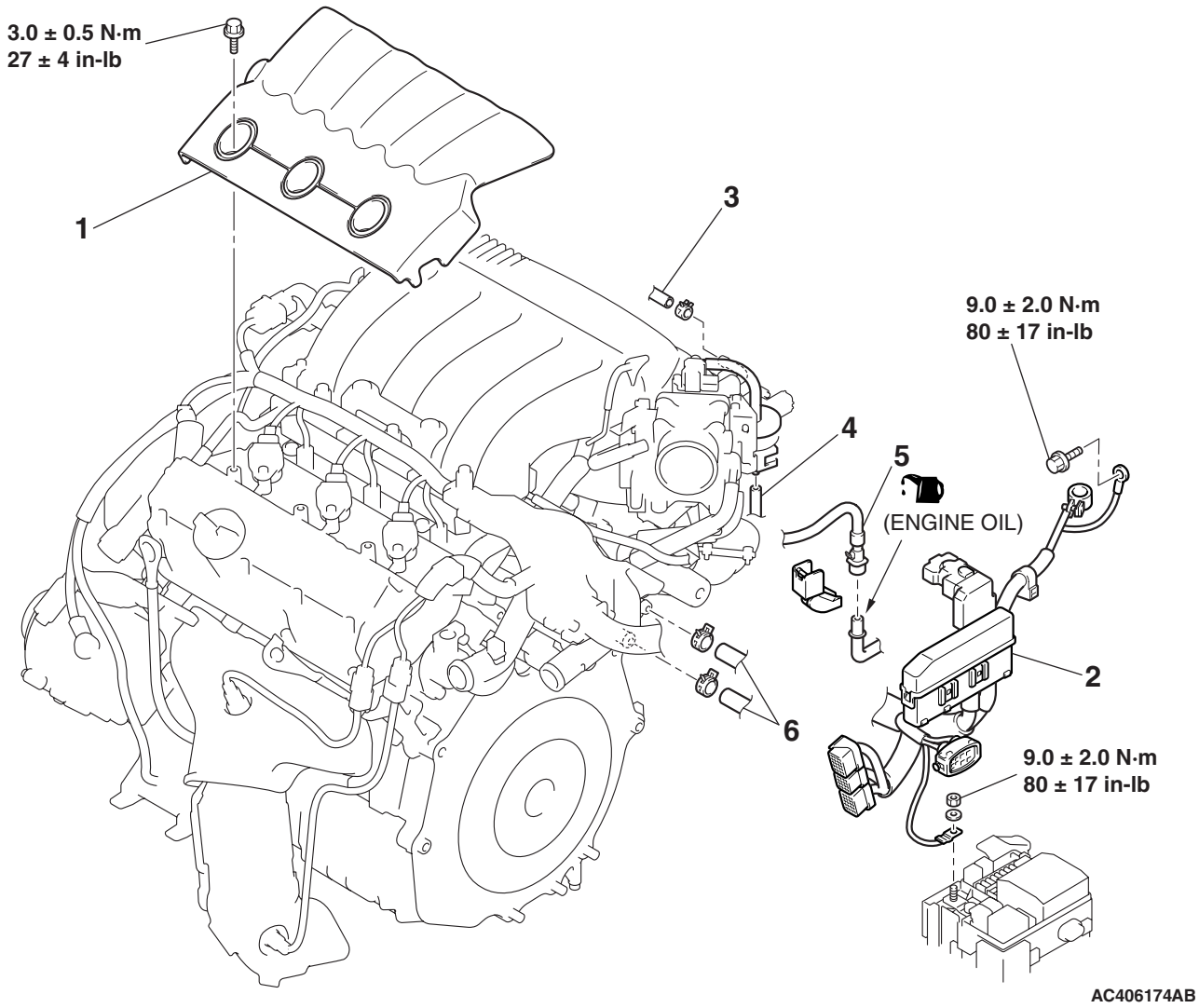

REMOVAL STEPS

1. ENGINE COVER
2. CONTROL WIRING HARNESS CONNECTION
3. VACUUM HOSE CONNECTION <<B>>
4. EVAPORATIVE EMISSION PURGE HOSE CONNECTION
5. <<A>> >>C<< FUEL HIGH-PRESSURE HOSE CONNECTION <<C>>
6. HEATER HOSE CONNECTION

REMOVAL STEPS (Continued)

- DRIVE SHAFT (REFER TO GROUP 26, DRIVE SHAFT ASSEMBLY P.26-14).
- EXHAUST MANIFOLD (RIGHT BANK) (REFER TO GROUP 15, EXHAUST MANIFOLD P.15-19).
- RADIATOR (REFER TO GROUP 14, RADIATOR P.14-26).

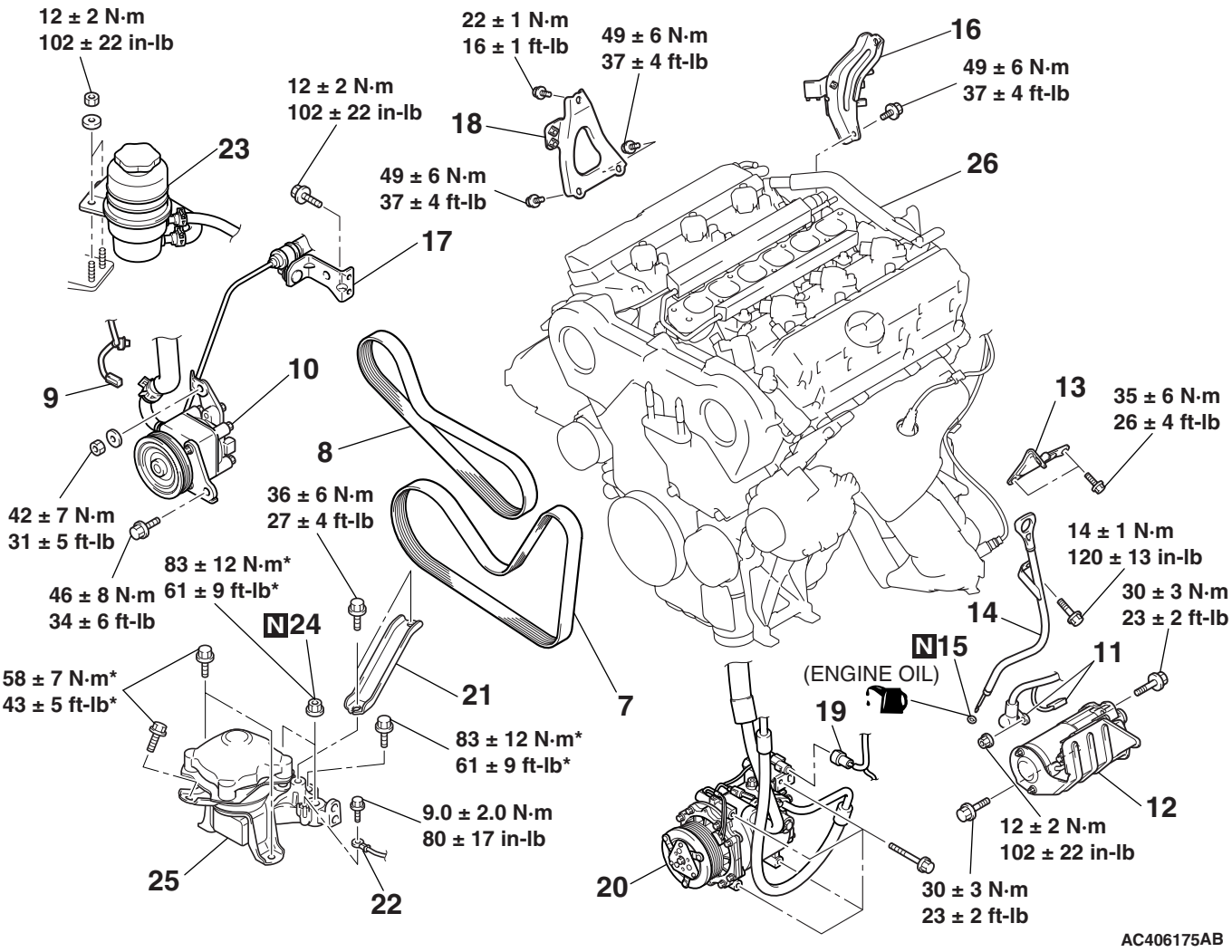

- INTAKE MANIFOLD PLENUM (REFER TO GROUP 15, INTAKE MANIFOLD PLENUM P.15-7).
7. GENERATOR DRIVE BELT
8. POWER STEERING OIL PUMP DRIVE BELT
9. POWER STEERING PRESSURE SWITCH CONNECTOR
<<D>> 10. POWER STEERING OIL PUMP
11. STARTER CONNECTOR AND TERMINAL
12. STARTER ASSEMBLY
<<E>> 13. ENGINE HANGER
<<E>> 14. ENGINE OIL DIPSTICK ASSEMBLY
15. O-RING
<<E>> 16. THROTTLE BODY STAY
17. POWER STEERING PRESSURE HOSE CLAMP BRACKET
<<E>> 18. INTAKE MANIFOLD PLENUM STAY (REAR)
<<F>> • TRANSAXLE ASSEMBLY
19. A/C COMPRESSOR ASSEMBLY CONNECTOR
<<G>> 20. A/C COMPRESSOR ASSEMBLY
21. ENGINE MOUNTING STAY
22. GROUNDING CABLE CONNECTION
23. POWER STEERING OIL RESERVOIR
24. SELF-LOCKING NUTS
<<H>> >>B<< 25. ENGINE FRONT MOUNTING BRACKET
<<I>> >>A<< 26. ENGINE ASSEMBLY

Required Special Tools:

- MB991454: Engine Hanger Balancer
- MB991895: Engine Hanger
- MB991928: Engine Hanger
- MB992012: Engine Hanger Plate A
- MB992013: Engine Hanger Plate B

TSB Revision

REMOVAL SERVICE POINTS

<<A>> FUEL HIGH-PRESSURE HOSE DISCONNECTION

1. Remove the fuel high-pressure hose stopper.

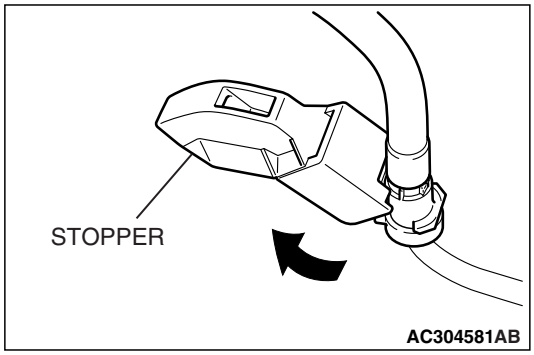

2. Remove the fuel high-pressure hose in the direction shown in the figure while the retainer is pulled up.

   NOTE: If the retainer is released, install it after removing the fuel high-pressure hose.

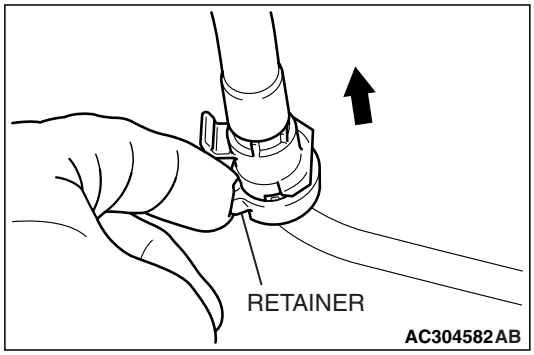

<<B>> EXHAUST MANIFOLD (RIGHT BANK) REMOVAL

Do not remove the center exhaust pipe, and pull out the exhaust manifold (right bank) between the crossmember and cylinder block.

<<C>> RADIATOR REMOVAL

Secure the A/C condenser and front end structure bar with a cord in a location where it does not interfere engine assembly removal.

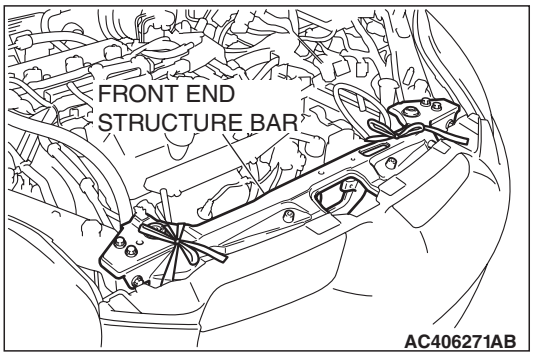

<<D>> POWER STEERING OIL PUMP REMOVAL

Remove the power steering oil pump from the engine with the hose attached.

NOTE: Place the removed power steering oil pump in a place where it will not interfere when removing and installing the engine assembly, and secure it with a cord or wire.

<<E>> ENGINE HANGER/ENGINE OIL DIPSTICK ASSEMBLY/THROTTLE BODY STAY/INTAKE MANIFOLD PLENUM STAY (REAR) REMOVAL

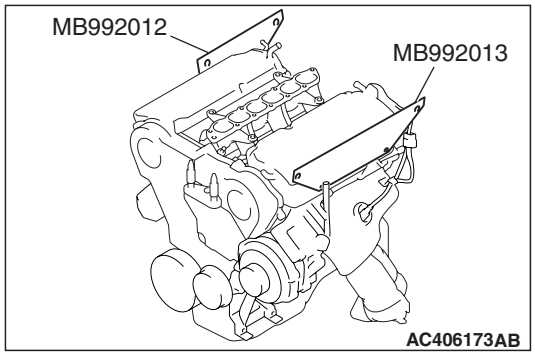

After removing the intake manifold plenum stay (rear), throttle body stay, engine oil dipstick assembly and engine hanger, set special tools MB992012 and MB992013 to each cylinder head.

<<F>> TRANSAXLE ASSEMBLY REMOVAL

Remove the transaxle assembly. (M/T: Refer to GROUP 22A, Manual Transaxle Assembly P.22A-20, A/T: Refer to GROUP 23A, Automatic Transaxle Assembly P.23A-409).

<<G>> A/C COMPRESSOR ASSEMBLY REMOVAL

Remove the compressor from the compressor bracket with the hose still attached.

NOTE: Place the removed A/C compressor where it will not interfere when removing and installing the engine assembly, and secure it with a cord or wire.

<<H>> ENGINE FRONT MOUNTING BRACKET REMOVAL

1. Support the engine with a garage jack.
2. <Engine hanger MB991895 is used>
   Remove special tool MB991895.

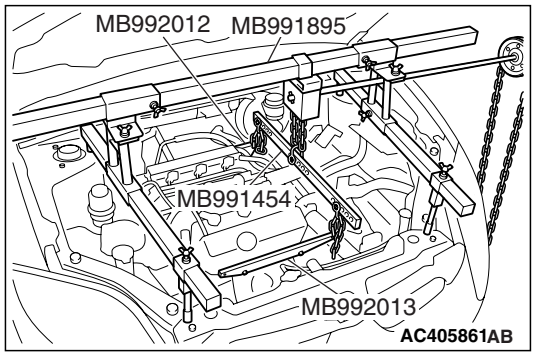

3. <Engine hanger MB991928 is used>
   Remove special tool MB991928.

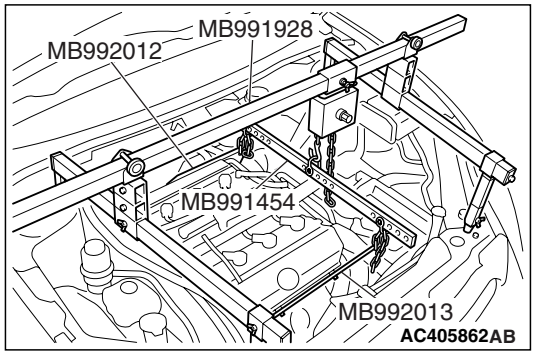

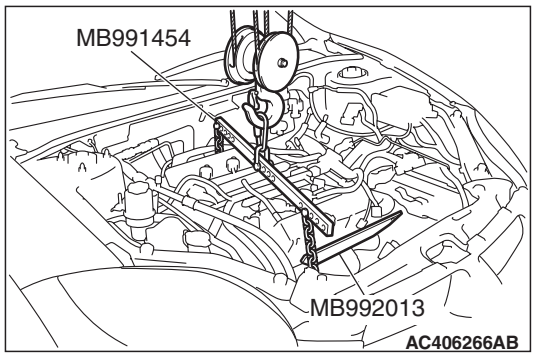

4. Remove special tool MB991454 and hook it again as shown. then, hold the engine assembly with the chain block, etc.
5. Place a garage jack against the engine oil pan with a piece of wood in between so that the weight of the engine is no longer being applied to the engine mount.
6. Loosen the engine mount mounting nuts and bolts, and remove the engine mount.

<<I>> ENGINE ASSEMBLY REMOVAL

After checking that all cables, hoses and wiring harness connectors and so on are disconnected from the engine, lift the chain block slowly to remove the engine assembly upward from the engine compartment.

INSTALLATION SERVICE POINTS

>>A<< ENGINE ASSEMBLY INSTALLATION

Install the engine assembly, being careful not to pinch the cables, hoses or wiring harness connectors.

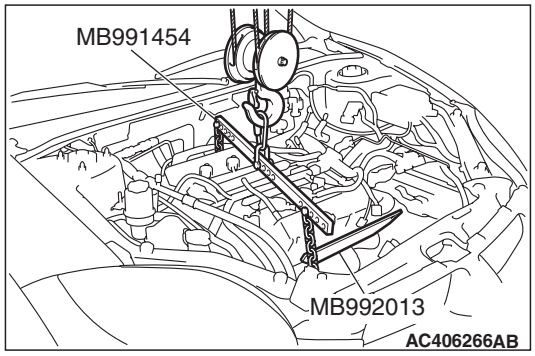

>>B<< ENGINE FRONT MOUNTING BRACKET INSTALLATION

1. Place a garage jack against the engine oil pan with a piece of wood in between, and install the engine mount while adjusting the position of the engine.
2. Support the engine assembly with a garage jack.
3. Remove the chain block.
4. <Engine hanger MB991895 is used>
   (1) Set special tool MB991895 to the strut mounting nuts (A and B) and front end structure bar assembling bolts (C and D) as shown.

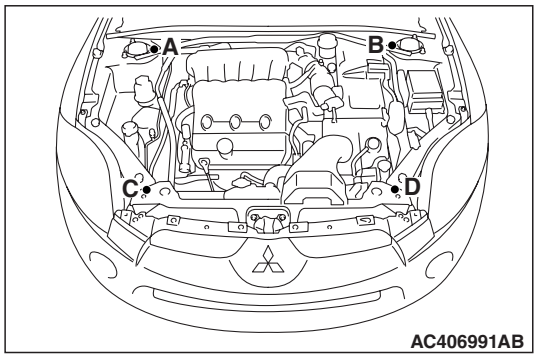

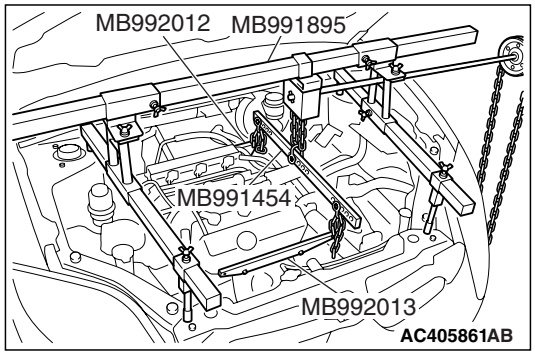

(2) Remove special tool MB991454 and hook it again as shown. Then, set special tool MB991454 to hold the engine assembly.

5. <Engine hanger MB991928 is used>
   (1) Assemble special tool MB991928. (Set following parts to the base hanger.)
   - SLIDE BRACKET (HI)
   - FOOT (STANDARD) (MB991932)
   - JOINT (140) (MB991931)

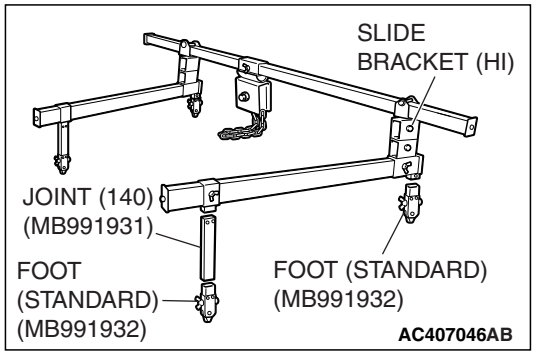

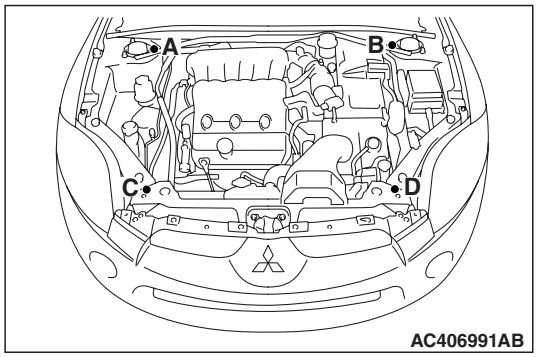

(2) Set special tool MB991928 to the strut mounting nuts (A and B) and front end structure bar assembling bolts (A and B) and (C and D) as shown.

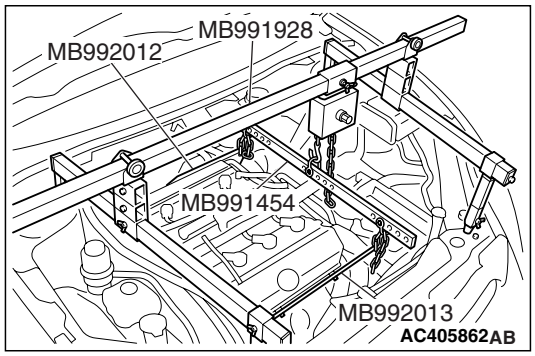

(3) Remove special tool MB991454 and hook it again as shown. Then, set special tool MB991454 to hold the engine assembly.

NOTE: Adjust the engine hanger balance by sliding the slide bracket (HI).

>>C<< FUEL HIGH-PRESSURE HOSE CONNECTION

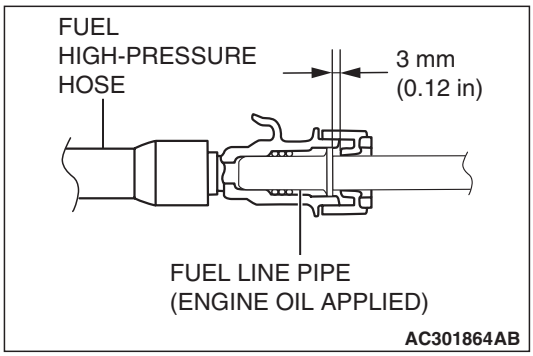

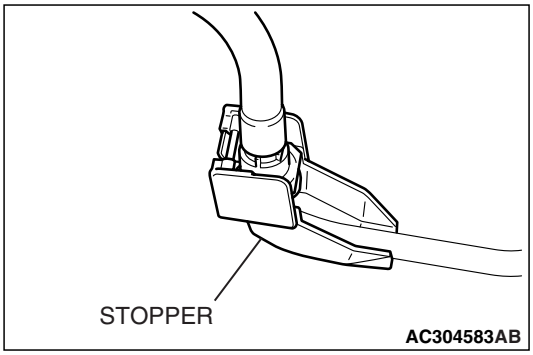

⚠ CAUTION

After connecting the fuel high-pressure hose, slightly pull it to ensure that it is installed securely. Also confirm that there is a play approximately 3 mm (0.12 inch). Then install the stopper securely.

Apply a small amount of engine oil to the fuel line pipe and then install the fuel high-pressure hose.

CAMSHAFT OIL SEAL

REMOVAL AND INSTALLATION

M1112002200200

Pre-removal and Post-installation Operation
- Timing Belt Removal and Installation (Refer to P.11C-59).

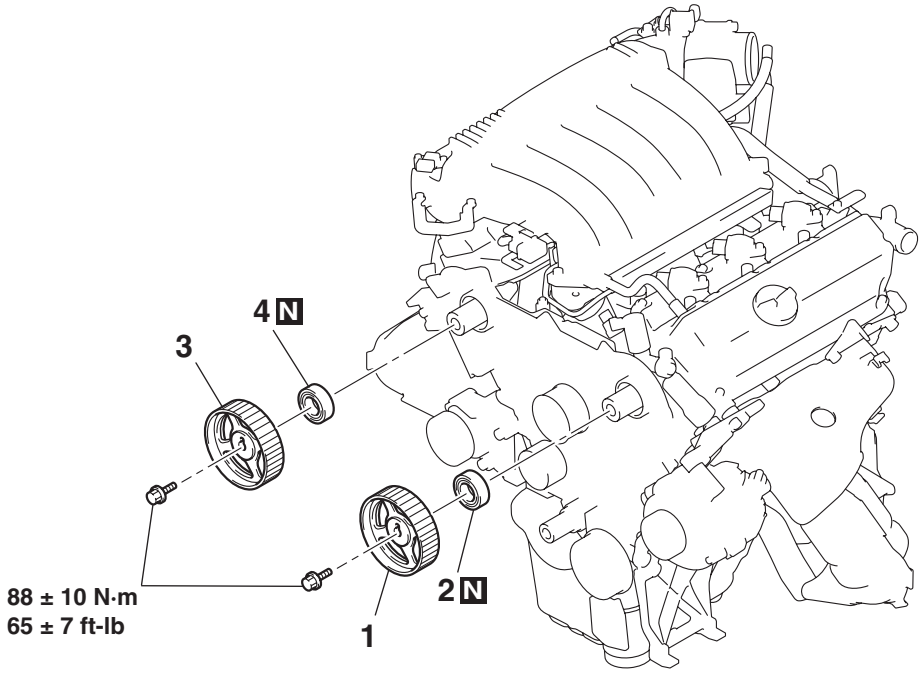

AC406176AB

REMOVAL STEPS

<<A>> >>B<< 1. LEFT BANK CAMSHAFT SPROCKET

<<B>> >>A<< 2. CAMSHAFT OIL SEAL

REMOVAL STEPS (Continued)

<<A>> >>B<< 3. RIGHT BANK CAMSHAFT SPROCKET

<<B>> >>A<< 4. CAMSHAFT OIL SEAL

Required Special Tools:

- MB990767: Front Hub and Flange End Yoke Holder
- MD998713: Camshaft Oil Seal Installer
- MD998715: Crankshaft Pulley Holder Pin

REMOVAL SERVICE POINTS

<<A>> CAMSHAFT SPROCKET REMOVAL

Use special tools MD998715 and MB990767 to remove the camshaft sprocket.

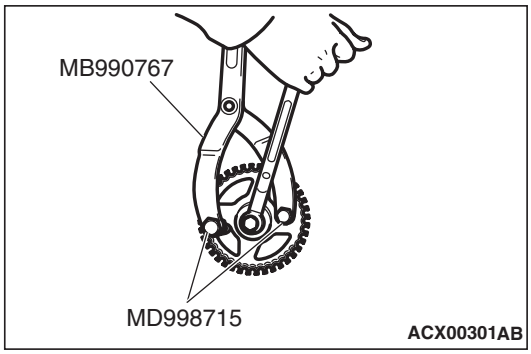

TSB Revision

<<B>> CAMSHAFT OIL SEAL REMOVAL

1. Make a notch in the oil seal lip section with a knife, etc.

⚠ CAUTION

Be careful not to damage the camshaft and the cylinder head.

2. Cover the end of a flat-tipped screwdriver with a shop towel and insert into the notched section of the oil seal, and pry out the oil seal to remove it.

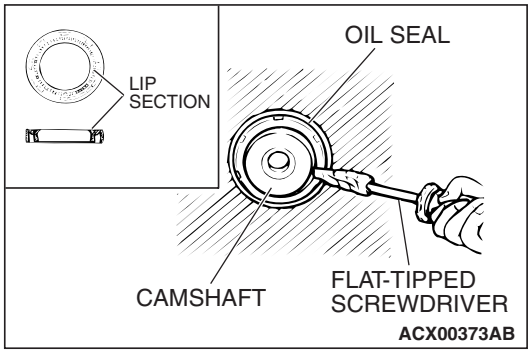

INSTALLATION SERVICE POINTS

>>A<< CAMSHAFT OIL SEAL INSTALLATION

1. Apply engine oil to the camshaft oil seal lip.
2. Use special tool MD998713 to press-fit the camshaft oil seal.

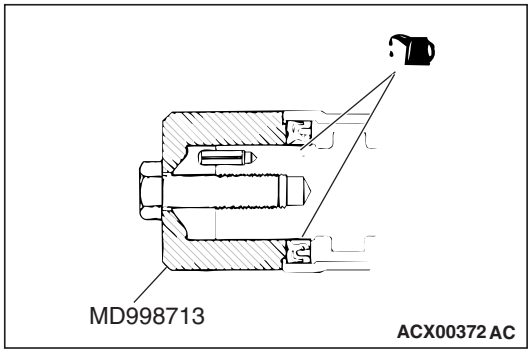

>>B<< CAMSHAFT SPROCKET INSTALLATION

1. Use special tools MD998715 and MB990767 in the same way as during removal to install the camshaft sprocket.
2. Tighten the camshaft sprocket mounting bolt to the specified torque.

   Tightening torque: 88 ±10 N· m (65 ±7 ft-lb)

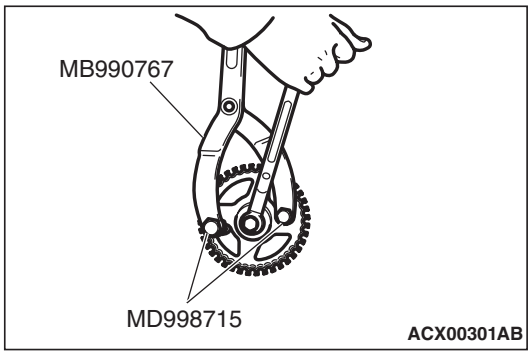

CAMSHAFT AND VALVE STEM SEAL

REMOVAL AND INSTALLATION

M1112006600802

⚠ CAUTION

***Remove and assemble the marked parts in each cylinder unit.**

<LEFT BANK>

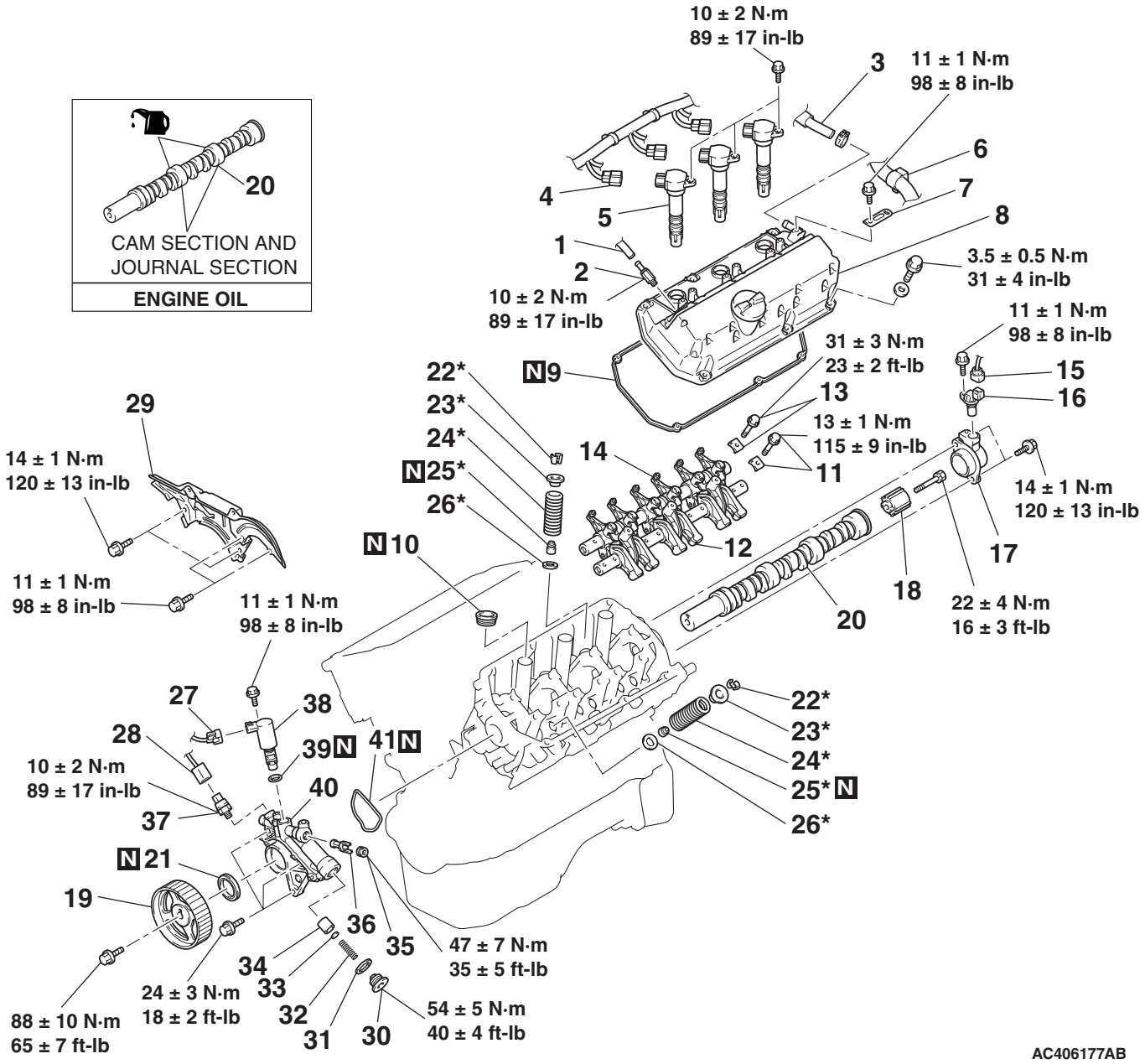

CAMSHAFT REMOVAL STEPS

- TIMING BELT (REFER TO P.11C-59).
- THERMOSTAT HOUSING (REFER TO GROUP 14, WATER HOSE AND WATER PIPE P.14-39).

1. PCV HOSE CONNECTION
2. PCV VALVE

CAMSHAFT REMOVAL STEPS

3. BLOW-BY HOSE CONNECTION
4. IGNITION COIL CONNECTOR
5. IGNITION COIL
6. ENGINE CONTROL WIRING HARNESS CLAMP
7. HARNESS BRACKET
8. ROCKER COVER
9. ROCKER COVER GASKET
10. SPARK PLUG GUIDE OIL SEAL

TSB Revision

CAMSHAFT REMOVAL STEPS

>>F<< 11. ROCKER SHAFT BOLTS AND CAP (EXHAUST SIDE)
<<A>> >>F<< 12. ROCKER ARM AND SHAFT ASSEMBLY (EXHAUST SIDE)
>>F<< 13. ROCKER SHAFT BOLTS AND CAP (INTAKE SIDE)
<<A>> >>F<< 14. ROCKER ARM AND SHAFT ASSEMBLY (INTAKE SIDE)
15. CAMSHAFT POSITION SENSOR CONNECTOR
16. CAMSHAFT POSITION SENSOR
>>I<< 17. CAMSHAFT POSITION SENSOR SUPPORT
18. CAMSHAFT POSITION SENSING CYLINDER
<<B>> >>H<< 19. CAMSHAFT SPROCKET
20. CAMSHAFT
<<C>> >>G<< 21. CAMSHAFT OIL SEAL

VALVE STEM SEAL REMOVAL STEPS

1. PCV HOSE CONNECTION
2. PCV VALVE
3. BLOW-BY HOSE CONNECTION
4. IGNITION COIL CONNECTOR
5. IGNITION COIL
6. ENGINE CONTROL WIRING HARNESS CLAMP
8. ROCKER COVER
9. ROCKER COVER GASKET
10. SPARK PLUG GUIDE OIL SEAL
>>F<< 11. ROCKER SHAFT BOLTS AND CAP (EXHAUST SIDE)
<<A>> >>F<< 12. ROCKER ARM AND SHAFT ASSEMBLY (EXHAUST SIDE)
>>F<< 13. ROCKER SHAFT BOLTS AND CAP (INTAKE SIDE)
<<A>> >>F<< 14. ROCKER ARM AND SHAFT ASSEMBLY (INTAKE SIDE)

VALVE STEM SEAL REMOVAL STEPS (Continued)

- SPARK PLUG (REFER TO GROUP 16, IGNITION COIL P.16-43).

<<D>> >>E<< 22. VALVE SPRING RETAINER LOCK
23. VALVE SPRING RETAINER
>>D<< 24. VALVE SPRING
>>C<< 25. VALVE STEM SEAL
26. VALVE SPRING SEAT

OIL FEEDER CONTROL VALVE LEFT HOUSING REMOVAL STEPS

- BATTERY, BATTERY TRAY AND BRACKET
- AIR INTAKE HOSE (REFER TO GROUP 15, AIR CLEANER P.15-5).
- TIMING BELT (REFER TO P.11C-59).

<<B>> >>H<< 19. CAMSHAFT SPROCKET
27. ENGINE OIL CONTROL VALVE CONNECTOR
28. ENGINE OIL PRESSURE SWITCH CONNECTOR
29. TIMING BELT REAR CENTER COVER
30. ACCUMULATOR BOLT
31. GASKET
32. OIL FEEDER ACCUMULATOR SPRING
33. OIL FEEDER ACCUMULATOR SPRING SEAT
34. OIL FEEDER ACCUMULATOR PLUNGER
35. TAPER PLUG
36. OIL FEEDER CONTROL VALVE FILTER
>>B<< 37. ENGINE OIL PRESSURE SWITCH
>>A<< 38. ENGINE OIL CONTROL VALVE
>>A<< 39. O-RING
40. OIL FEEDER CONTROL VALVE LEFT HOUSING
41. OIL FEEDER CONTROL VALVE HOUSING GASKET

Required Special Tools:

- MB990767: Front Hub and Flange End Yoke Holder
- MD998443: Auto-lash Adjuster Holder
- MD998713: Camshaft Oil Seal Installer
- MD998715: Crankshaft Pulley Holder Pin
- MD998772: Valve Spring Compressor
- MB991999: Valve Stem Seal Installer

<RIGHT BANK>

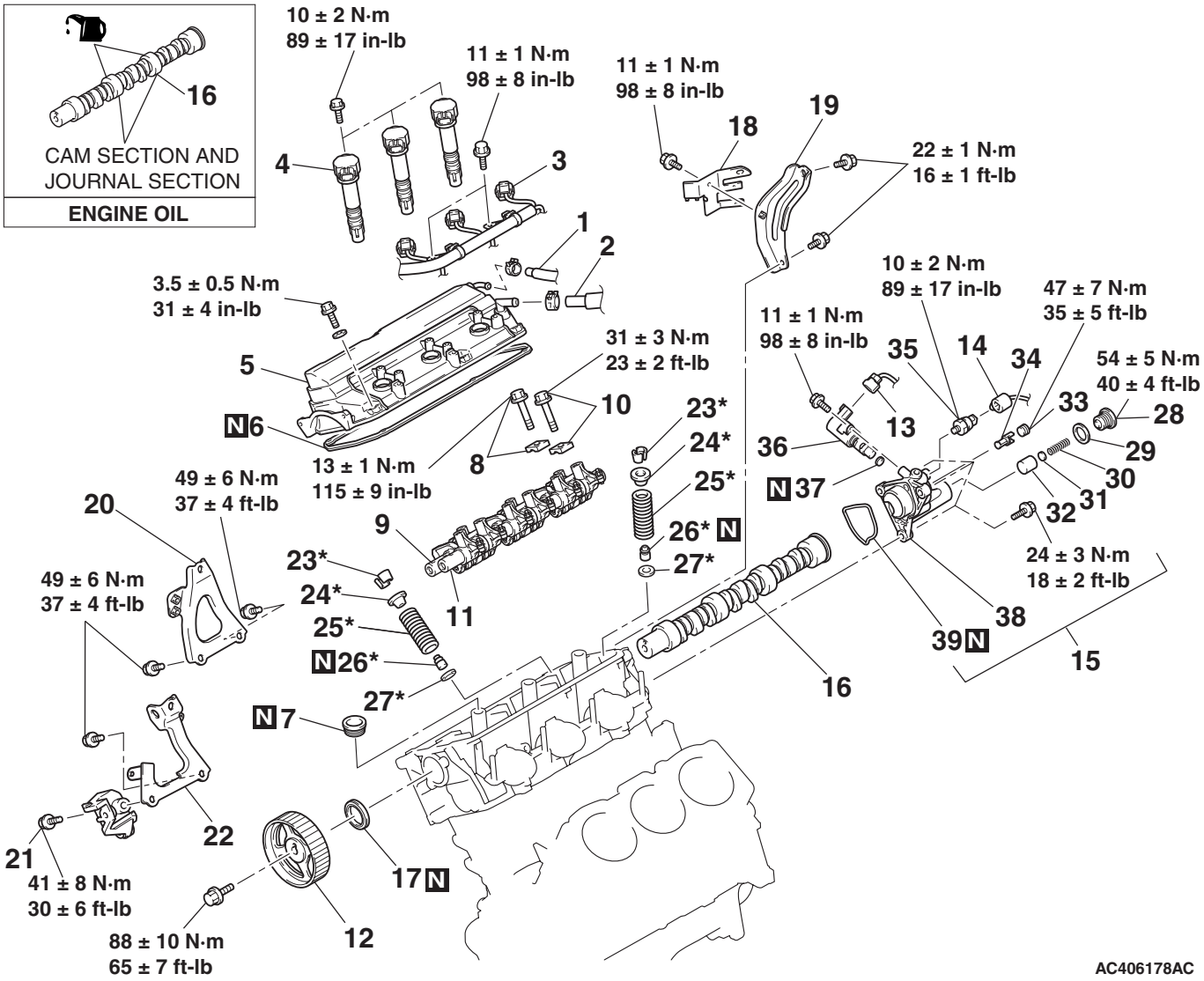

CAMSHAFT REMOVAL STEPS

- INTAKE MANIFOLD PLENUM (REFER TO GROUP 15, INTAKE MANIFOLD PLENUM P.15-7).
- TIMING BELT (REFER TO P.11C-59).
- BATTERY, BATTERY TRAY AND BRACKET
- HEATER HOSE AND WATER HOSE (REFER TO GROUP 14, WATER HOSE AND WATER PIPE P.14-39).

1. BREATHER HOSE CONNECTION
2. BLOW-BY HOSE CONNECTION
3. IGNITION COIL CONNECTOR
4. IGNITION COIL
5. ROCKER COVER
6. ROCKER COVER GASKET
7. SPARK PLUG GUIDE OIL SEAL

CAMSHAFT REMOVAL STEPS

>>F<<
8. ROCKER SHAFT BOLTS AND CAP (EXHAUST SIDE)

<<A>> >>F<<
9. ROCKER ARM AND SHAFT ASSEMBLY (EXHAUST SIDE)

>>F<<
10. ROCKER SHAFT BOLTS AND CAP (INTAKE SIDE)

<<A>> >>F<<
11. ROCKER ARM AND SHAFT ASSEMBLY (INTAKE SIDE)

<<B>> >>H<<
12. CAMSHAFT SPROCKET
13. ENGINE OIL CONTROL VALVE CONNECTOR
14. ENGINE OIL PRESSURE SWITCH CONNECTOR
15. OIL FEEDER CONTROL VALVE RIGHT HOUSING ASSEMBLY
16. CAMSHAFT

<<C>> >>G<<
17. CAMSHAFT OIL SEAL

VALVE STEM SEAL REMOVAL STEPS

- INTAKE MANIFOLD PLENUM (REFER TO GROUP 15, INTAKE MANIFOLD PLENUM P.15-7).
- TIMING BELT FRONT UPPER COVER, RIGHT (REFER TO P.11C-59).

1. BREATHER HOSE CONNECTION
2. BLOW-BY HOSE CONNECTION
3. IGNITION COIL CONNECTOR
4. IGNITION COIL
5. ROCKER COVER
6. ROCKER COVER GASKET
7. SPARK PLUG GUIDE OIL SEAL

>>F<< 8. ROCKER SHAFT BOLTS AND CAP (EXHAUST SIDE)

<<A>> >>F<< 9. ROCKER ARM AND SHAFT ASSEMBLY (EXHAUST SIDE)

>>F<< 10. ROCKER SHAFT BOLTS AND CAP (INTAKE SIDE)

<<A>> >>F<< 11. ROCKER ARM AND SHAFT ASSEMBLY (INTAKE SIDE)

- SPARK PLUG (REFER TO GROUP 16, IGNITION COIL P.16-43).

18. HARNESS BRACKET
19. THROTTLE BODY STAY
20. INTAKE MANIFOLD PLENUM STAY (REAR)

- POWER STEERING OIL PUMP ASSEMBLY (REFER TO GROUP 37, POWER STEERING OIL PUMP ASSEMBLY P.37-57).

21. POWER STEERING OIL PUMP BRACKET CONNECTING BOLT

VALVE STEM SEAL REMOVAL STEPS (Continued)

22. INTAKE MANIFOLD PLENUM STAY (FRONT)

<<D>> >>E<< 23. VALVE SPRING RETAINER LOCK

24. VALVE SPRING RETAINER

>>D<< 25. VALVE SPRING

>>C<< 26. VALVE STEM SEAL

27. VALVE SPRING SEAT

OIL FEEDER CONTROL VALVE RIGHT HOUSING REMOVAL STEPS

- BATTERY, BATTERY TRAY AND BRACKET
- AIR INTAKE HOSE (REFER TO GROUP 15, AIR CLEANER P.15-5).

13. ENGINE OIL CONTROL VALVE CONNECTOR
14. ENGINE OIL PRESSURE SWITCH CONNECTOR
28. ACCUMULATOR BOLT
29. GASKET
30. OIL FEEDER ACCUMULATOR SPRING
31. OIL FEEDER ACCUMULATOR SPRING SEAT
32. OIL FEEDER ACCUMULATOR PLUNGER
33. TAPER PLUG
34. OIL FEEDER CONTROL VALVE FILTER

>>B<< 35. ENGINE OIL PRESSURE SWITCH

>>A<< 36. ENGINE OIL CONTROL VALVE

>>A<< 37. O-RING

38. OIL FEEDER CONTROL VALVE RIGHT HOUSING
39. OIL FEEDER CONTROL VALVE HOUSING GASKET

Required Special Tools:

- MB990767: Front Hub and Flange End Yoke Holder
- MD998443: Auto-lash Adjuster Holder
- MD998713: Camshaft Oil Seal Installer
- MD998715: Crankshaft Pulley Holder Pin
- MD998772: Valve Spring Compressor
- MB991999: Valve Stem Seal Installer

REMOVAL SERVICE POINTS

<<A>> ROCKER ARM, SHAFT AND LASH ADJUSTER ASSEMBLY REMOVAL

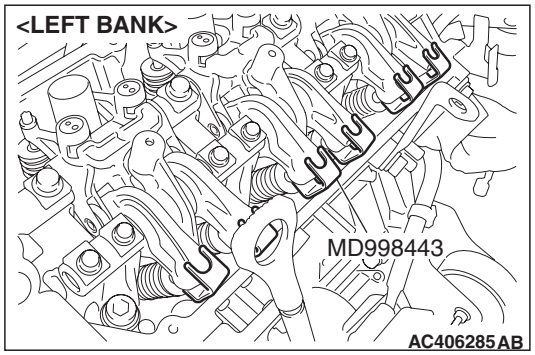

1. Install special tool MD998443 as shown in the illustration so that the lash adjusters will not fall out.

⚠ CAUTION

Never disassemble the rocker arm and shaft assembly.

2. Loosen the rocker arm and shaft assembly mounting bolt, and then remove the rocker arm and shaft assembly with the bolt still attached.

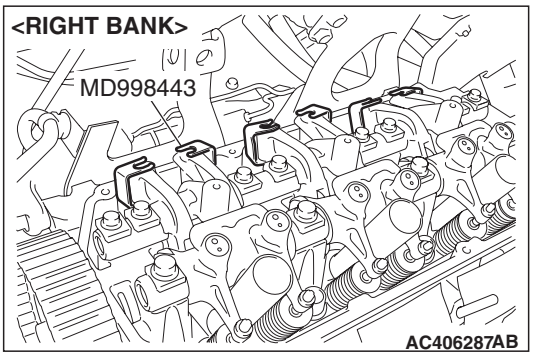

<<B>> CAMSHAFT SPROCKET REMOVAL

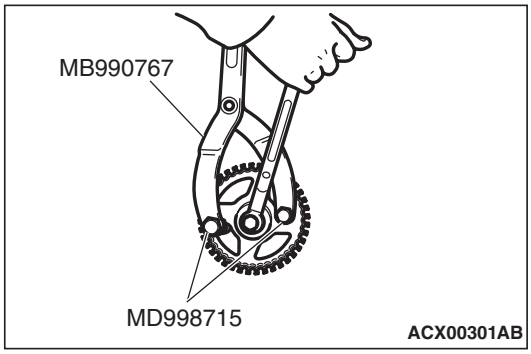

Use special tools MD998715 and MB990767 to remove the camshaft sprocket.

<<C>> CAMSHAFT OIL SEAL REMOVAL

1. Make a notch in the oil seal lip section with a knife, etc.

⚠ CAUTION

Be careful not to damage the camshaft and the cylinder head.

2. Cover the end of a flat-tipped screwdriver with a shop towel and insert into the notched section of the oil seal, and pry out the oil seal to remove it.

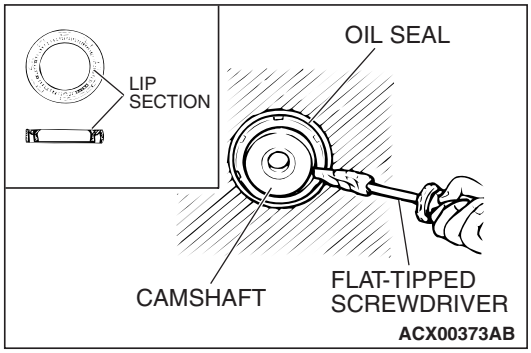

<<D>> VALVE SPRING RETAINER LOCK REMOVAL

⚠ CAUTION

When removing valve spring retainer locks, leave the piston of each cylinder in the TDC (Top Dead Center) position. The valve may fall into the cylinder if the piston is not properly in the TDC position.

Use special tool MD998772 to compress the valve spring, and remove the valve spring retainer locks.

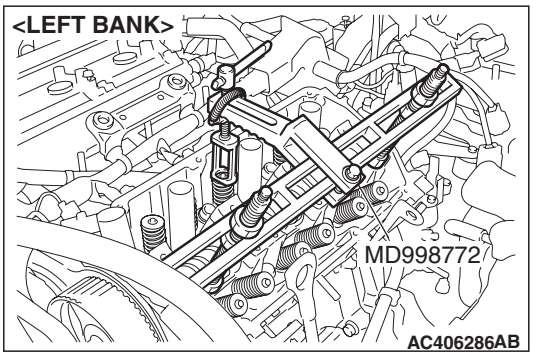

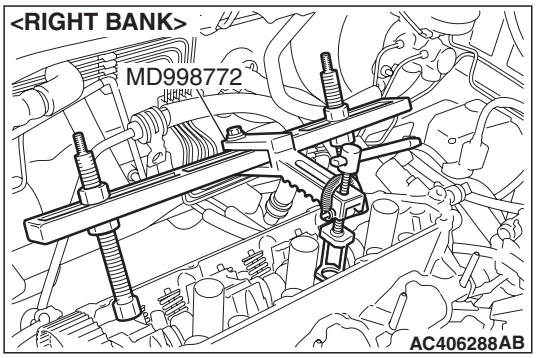

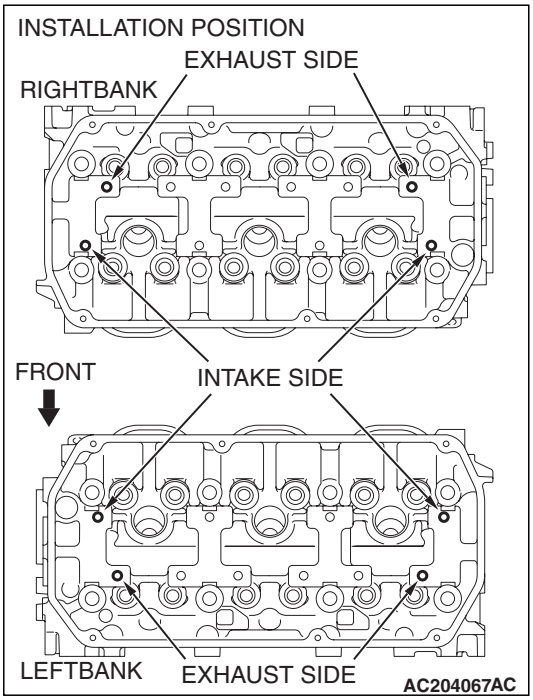

NOTE: Installation position of valve spring compressor special tool (MD998772) is different between exhaust side and intake side.

INSTALLATION SERVICE POINTS

>>A<< O-RING/ENGINE OIL CONTROL VALVE INSTALLATION

⚠ CAUTION

- **Never re-use the O-ring.**
- **Before installing O-ring, wind the tape with the soft adhesion (sealing tape) around the oil passages cut-out area of engine oil control valve to prevent the damage. If the O-ring is damaged, it can be the cause of oil leak.**

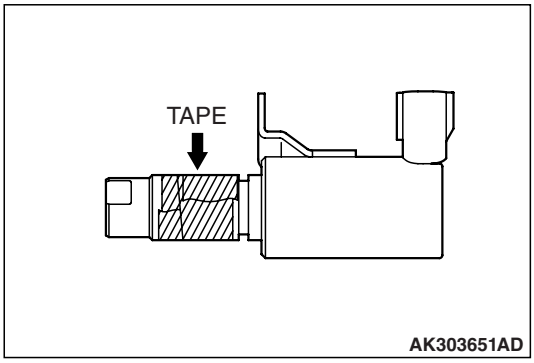

1. Apply a small amount of engine oil to the O-ring and then install it to the oil control valve.
2. Assemble the engine oil control valve to the cylinder head.
3. Tighten the engine oil control valve mounting bolt to the specified torque.

   Tightening torque: 11 ±1 N· m (98 ±8 in-lb)

>>B<< ENGINE OIL PRESSURE SWITCH INSTALLATION

1. Remove sealant from the engine oil pressure switch and cylinder head surfaces.

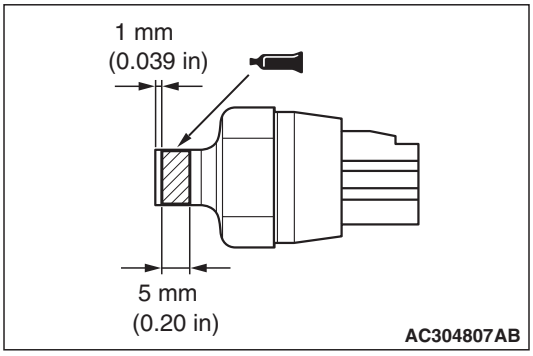

2. Apply sealant to the thread of the engine oil pressure switch as shown.

   Specified sealant: 3M™ AAD Part No.8672, 3M™ AAD Part No.8679/8678 or equivalent

   NOTE: Install the engine oil pressure switch within 15 minutes after applying the sealant.

⚠ CAUTION

Wait at least one hour. Never start the engine or let engine oil or coolant touch the adhesion surface during that time.

3. Tighten the engine oil pressure switch to the specified torque.

   Tightening torque: 10 ±2 N· m (89 ±17 in-lb)

>>C<< VALVE STEM SEAL INSTALLATION

1. Apply a small amount of engine oil to the valve stem seal.

⚠ CAUTION

- **Valve stem seals cannot be reused.**
- **Special tool MB991999 must be used to install the valve stem seal. Improper installation could result in oil leaking past the valve guide.**

2. Use special tool MB991999 to fill a new valve stem seal in the valve guide using the valve stem area as a guide.

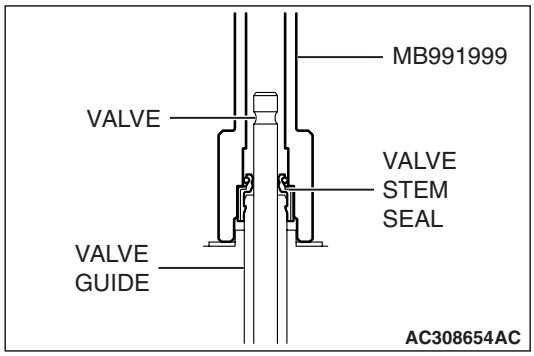

>>D<< VALVE SPRING INSTALLATION

Install the valve spring with its identification color painted end facing the rocker arm.

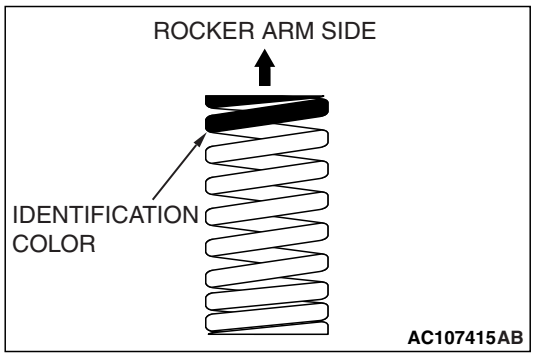

>>E<< VALVE SPRING RETAINER LOCK INSTALLATION

Use special tool MD998772 to compress the valve spring in the same manner as removal.

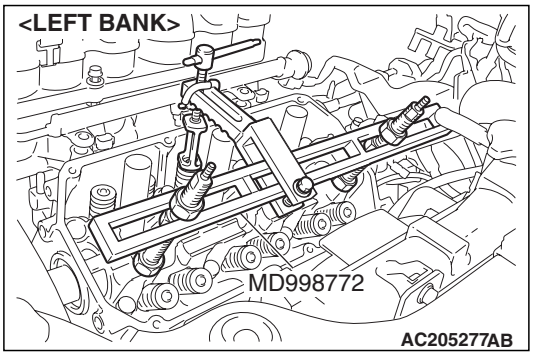

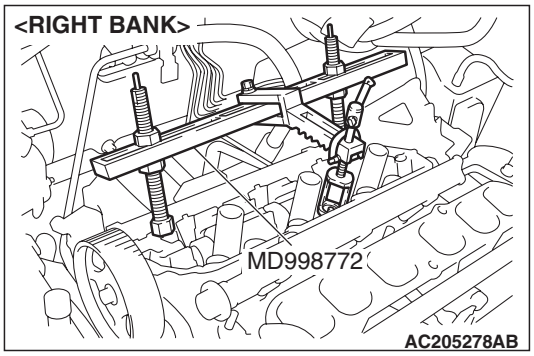

>>F<< ROCKER ARM AND SHAFT ASSEMBLY/ROCKER SHAFT BOLTS AND CAP INSTALLATION

1. Install the rocker arm, shaft and lash adjuster assembly.

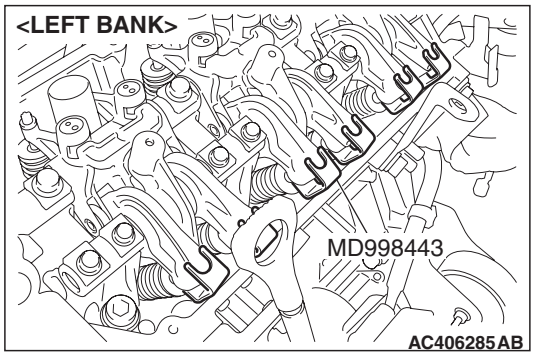

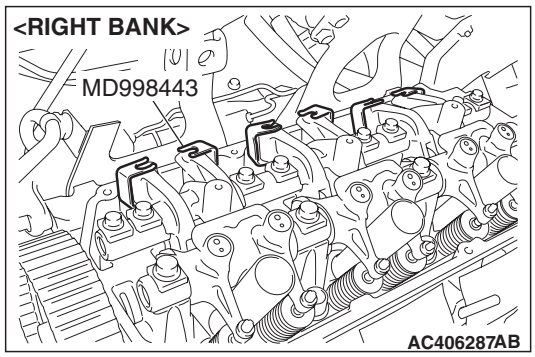

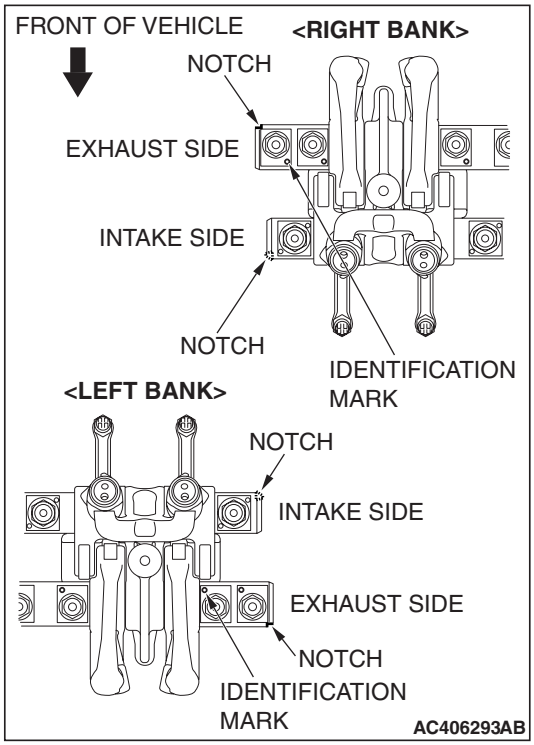

2. Check that notches in the rocker shaft are facing the direction shown in the illustration.
3. Install the rocker shaft cap with its identification mark in the direction shown.
4. Tighten the mounting bolts to the specified torque.

   Tightening torque:
   Intake side: 31 ±3 N· m (23 ±2 ft-lb)
   Exhaust side: 13 ±1 N· m (115 ±9 in-lb)
5. Remove special tool MD998443.

>>G<< CAMSHAFT OIL SEAL INSTALLATION

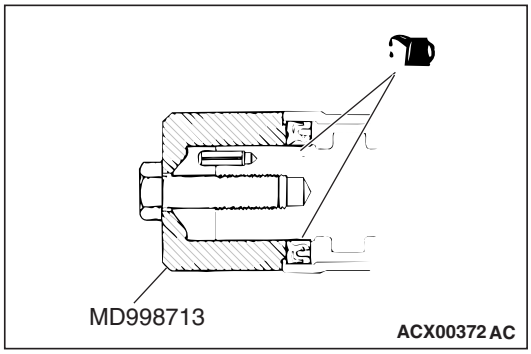

1. Apply engine oil to the camshaft oil seal lip.
2. Use special tool MD998713 to press-fit the camshaft oil seal.

>>H<< CAMSHAFT SPROCKET INSTALLATION

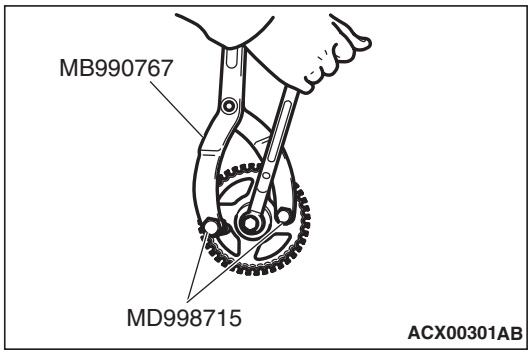

1. Use special tools MD998715 and MB990767 in the same way as during removal to install the camshaft sprocket.
2. Tighten the camshaft sprocket mounting bolt to the specified torque.

   Tightening torque: 88 ±10 N· m (65 ±7 ft-lb)

>>I<< CAMSHAFT POSITION SENSOR SUPPORT INSTALLATION

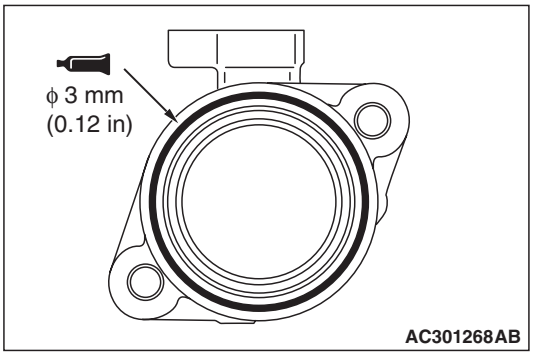

1. Remove oid sealant from the camshaft position sensor support and cylinder head surfaces.
2. Apply sealant to the camshaft position sensor support flange in a continuous bead as shown in the illustration.

   Specified sealant: 3M™ AAD Part No.8672, 3M™ AAD Part No.8679/8678 or equivalent

   NOTE: Install the camshaft position sensor support within 15 minutes after applying the sealant.
3. Install the camshaft position sensor support to the cylinder head.

⚠ CAUTION

Wait at least one hour. Never start the engine or let engine oil or coolant touch the adhesion surface during that time.

4. Tighten the camshaft position sensor support mounting bolts to the specified torque.

   Tightening torque: 14 ±1 N· m (120 ±13 in-lb)

OIL PAN AND OIL SCREEN

REMOVAL AND INSTALLATION <M/T>

M1112002500278

Pre-removal and Post-installation Operation
- Under Cover Removal and Installation (Refer to GROUP 51, Under Cover P.51-8).
- Engine Oil Draining and Refilling (Refer to GROUP 12, On-vehicle Service P.12-3).

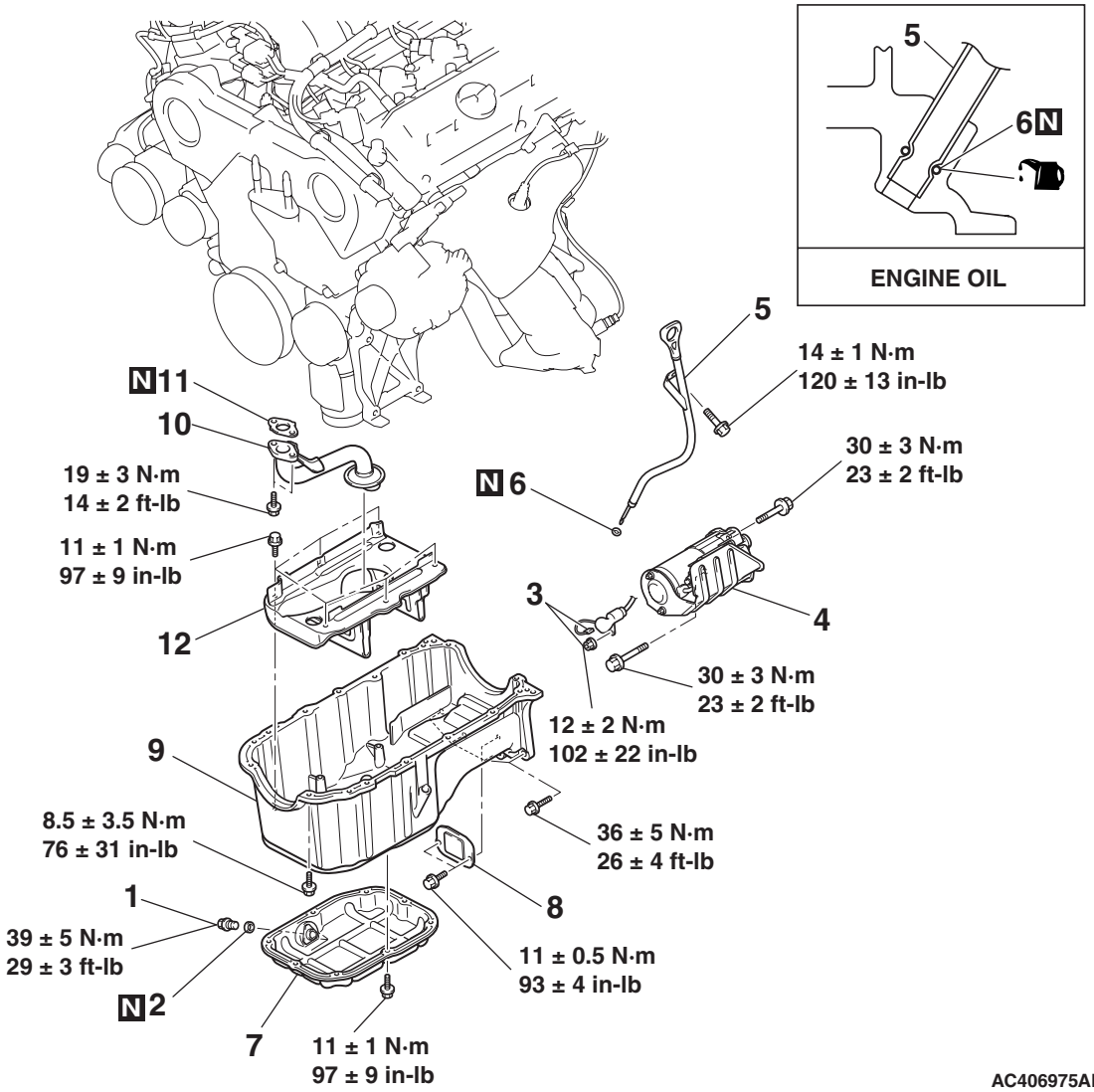

AC406975AB

REMOVAL STEPS
1. ENGINE OIL PAN DRAIN PLUG
2. ENGINE OIL PAN DRAIN PLUG GASKET
3. STARTER CONNECTOR AND TERMINAL
4. STARTER ASSEMBLY
5. ENGINE OIL DIPSTICK ASSEMBLY
6. O-RING

<<A>> >>B<< 7. ENGINE LOWER OIL PAN

REMOVAL STEPS (Continued)
- FRONT NO.1 EXHAUST PIPE (REFER TO GROUP 15, EXHAUST PIPE AND MAIN MUFFLER P.15-24).

8. COVER

<<B>> >>A<< 9. ENGINE UPPER OIL PAN
10. OIL SCREEN
11. GASKET
12. BAFFLE PLATE

TSB Revision

REMOVAL SERVICE POINTS

<<A>> ENGINE LOWER OIL PAN REMOVAL

1. Remove the engine lower oil pan mounting bolts.

⚠ CAUTION

Do not use oil pan remover special tool (MD998727). The engine upper oil pan is made of aluminum and this tool will damage it.

2. Apply a piece of wood to the lower oil pan and strike it with a hammer to remove the engine lower oil pan.

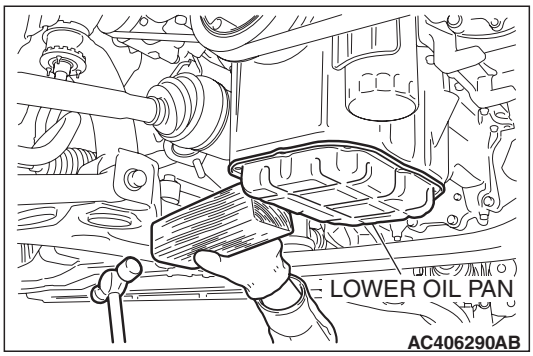

<<B>> ENGINE UPPER OIL PAN REMOVAL

1. Align the recessed area in the flywheel with the location shown. Mark the flywheel.

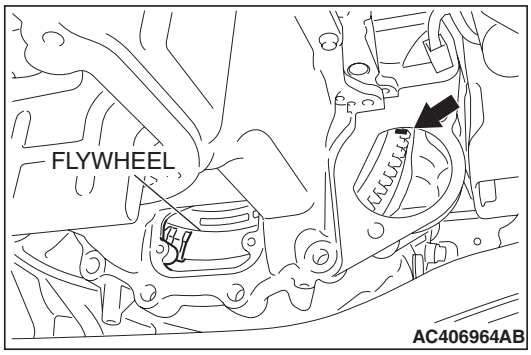

2. Turn the crankshaft so that the mark is positioned as shown.
3. Remove the engine upper oil pan mounting bolts.

⚠ CAUTION

Do not use oil pan remover special tool (MD998727). The engine upper oil pan is made of aluminum and this tool will damage it.

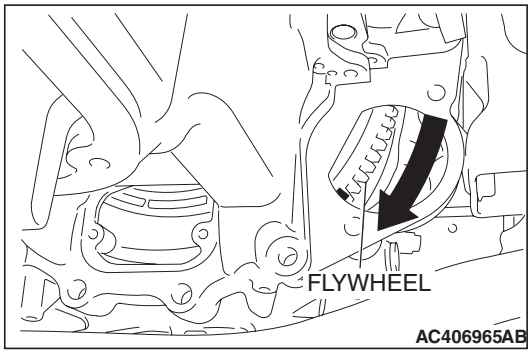

4. Screw in the bolt (M10) into bolt hole A in the location shown. Then lift the upper oil pan and remove it.

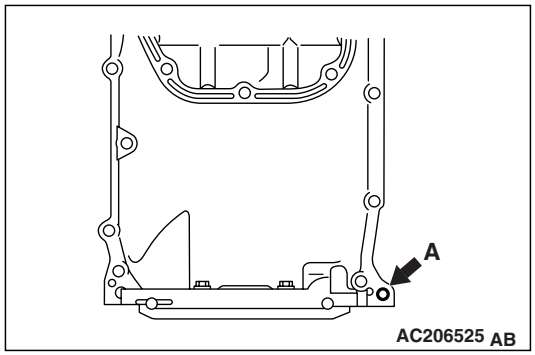

INSTALLATION SERVICE POINTS

>>A<< ENGINE UPPER OIL PAN INSTALLATION

1. Remove old sealant from the oil pan and cylinder block mating surfaces.
2. Degrease the sealant-coated surface and the engine mating surface.
3. Check that the recessed area in the flywheel and the mark is positioned as shown.

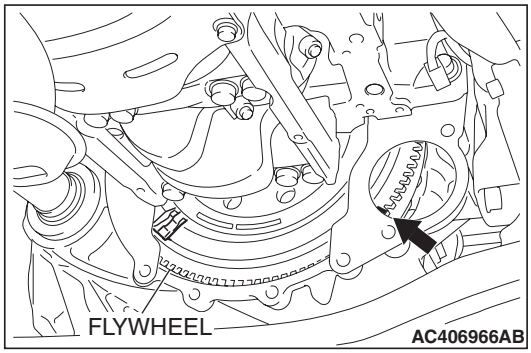

4. Apply a bead of the sealant to the cylinder block mating surface of the engine oil pan as shown.

   Specified sealant: 3M™ AAD Part No.8672, 8704, 3M™ AAD Part No.8679/8678 or equivalent

   NOTE: The sealant should be applied in a continuous bead approximately 4.0 mm (0.16 inch) in diameter.

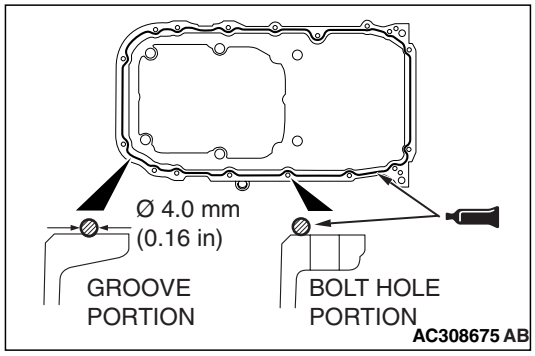

5. Assemble the oil pan to the cylinder block within 15 minutes after applying the sealant.

⚠ CAUTION

The bolt holes for bolts 13 and 14 in the illustration are cut away on the transaxle side. Be careful not to insert these bolts at an angle.

6. Tighten the bolts in the order shown in the illustration.

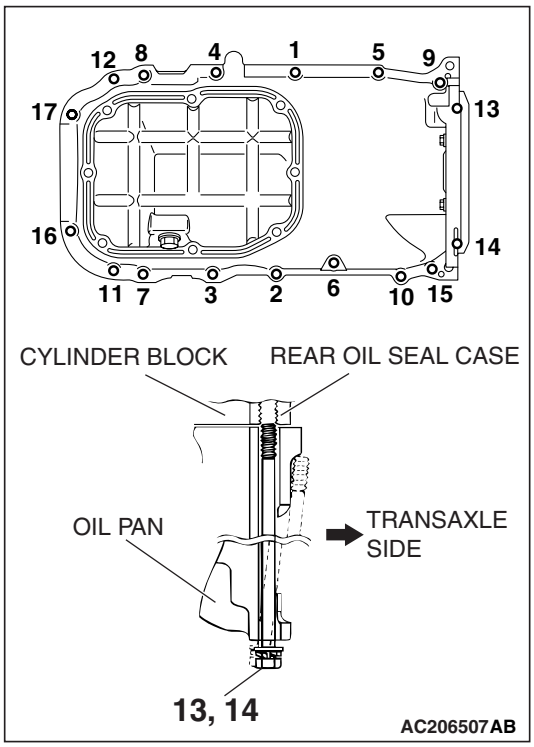

>>B<< ENGINE LOWER OIL PAN INSTALLATION

1. Remove sealant from the engine lower oil pan and engine upper oil pan.
2. Apply a bead of the sealant to the mating surface of the engine lower oil pan as shown.

   Specified sealant: 3M™ AAD Part No.8672, 8704, 3M™ AAD Part No.8679/8678 or equivalent

   NOTE: Install the engine lower oil pan within 15 minutes after applying sealant.

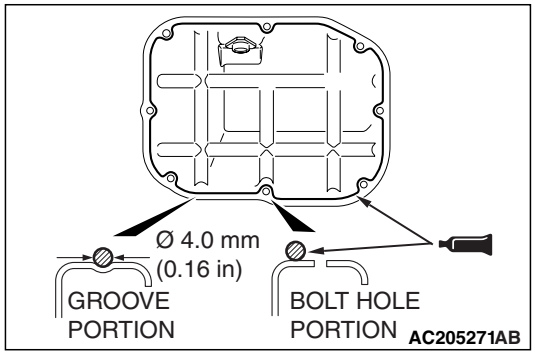

3. Assemble the engine lower oil pan to the engine upper oil pan.

⚠ CAUTION

Then wait at least one hour. Never start the engine or let engine oil or coolant touch the sealant surface during that time.

4. Tighten the bolts in the order shown in the illustration.

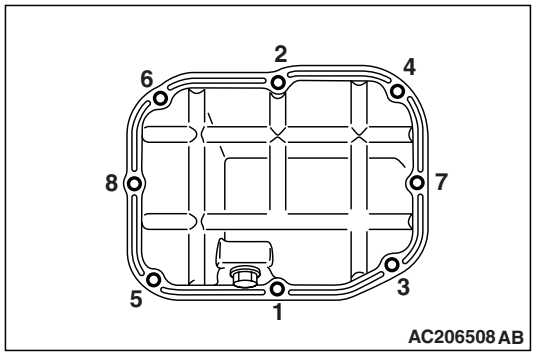

REMOVAL AND INSTALLATION <A/T>

M1112002500289

Pre-removal and Post-installation Operation
- Under Cover Removal and Installation (Refer to GROUP 51, Under Cover P.51-8).
- Engine Oil Draining and Refilling (Refer to GROUP 12, On-vehicle Service P.12-3).

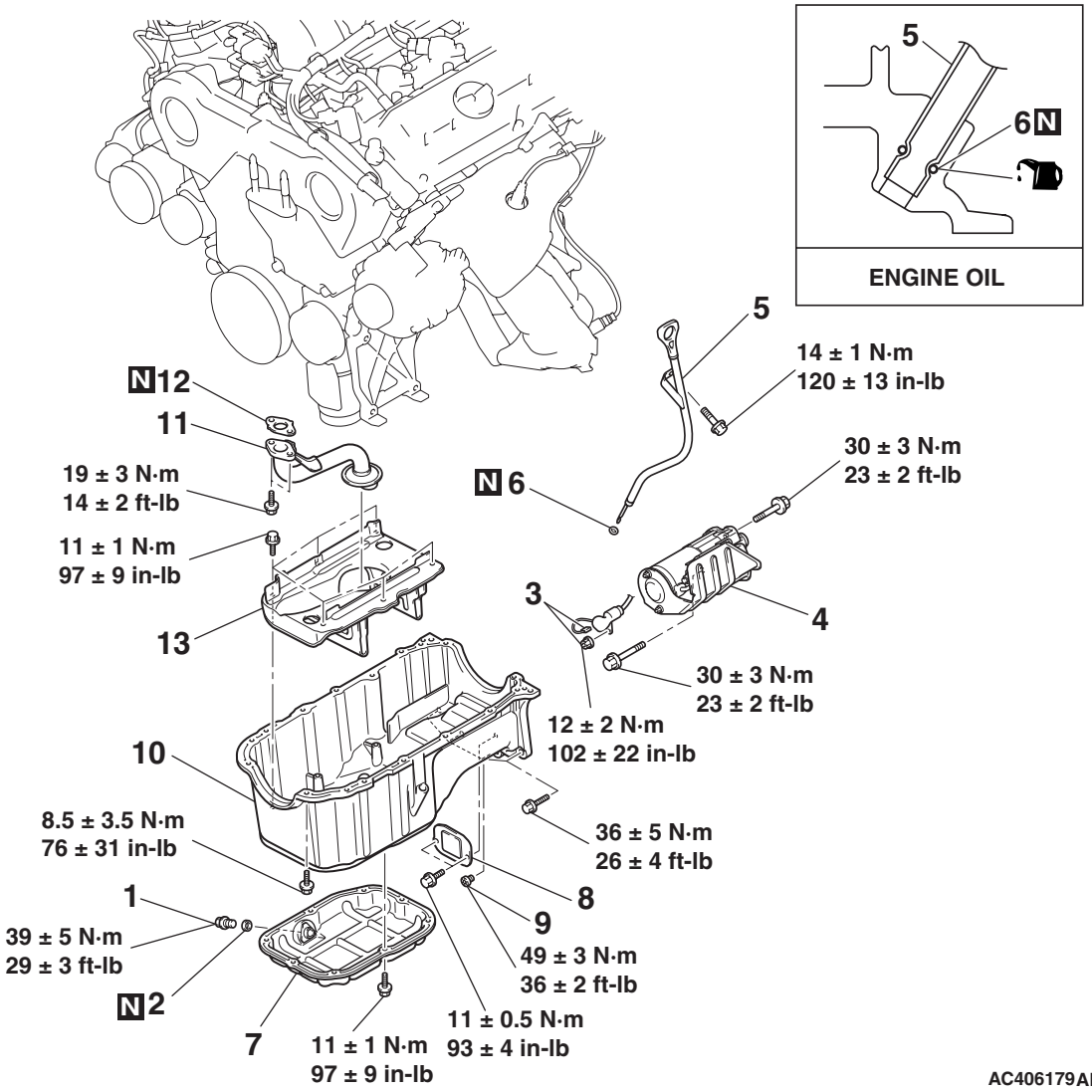

REMOVAL STEPS
1. ENGINE OIL PAN DRAIN PLUG
2. ENGINE OIL PAN DRAIN PLUG GASKET
3. STARTER CONNECTOR AND TERMINAL
4. STARTER ASSEMBLY
5. ENGINE OIL DIPSTICK ASSEMBLY
6. O-RING

<<A>> >>B<< 7. ENGINE LOWER OIL PAN

REMOVAL STEPS (Continued)
- FRONT NO.1 EXHAUST PIPE (REFER TO GROUP 15, EXHAUST PIPE AND MAIN MUFFLER P.15-24).

8. COVER

<<B>> 9. TORQUE CONVERTER CONNECTING BOLT

<<C>> >>A<< 10. ENGINE UPPER OIL PAN
11. OIL SCREEN
12. GASKET
13. BAFFLE PLATE

TSB Revision

REMOVAL SERVICE POINTS

<<A>> ENGINE LOWER OIL PAN REMOVAL

1. Remove the engine lower oil pan mounting bolts.

⚠ CAUTION

Do not use oil pan remover special tool (MD998727). The engine upper oil pan is made of aluminum and this tool will damage it.

2. Apply a piece of wood to the lower oil pan and strike it with a hammer to remove the engine lower oil pan.

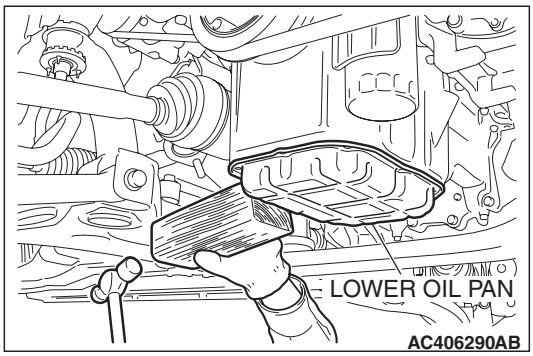

<<B>> TORQUE CONVERTER CONNECTING BOLT REMOVAL

Remove the one torque converter connecting bolt as shown.

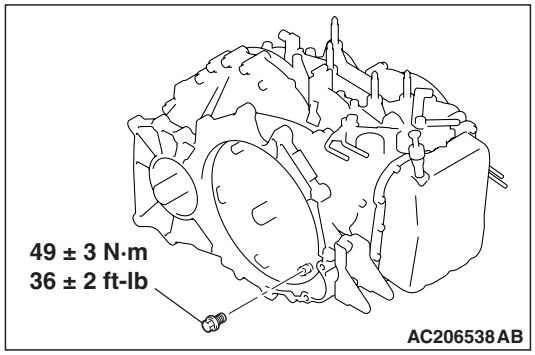

<<C>> ENGINE UPPER OIL PAN REMOVAL

1. Remove the engine upper oil pan mounting bolts.

⚠ CAUTION

Do not use oil pan remover special tool (MD998727). The engine upper oil pan is made of aluminum and this tool will damage it.

2. Screw in the bolt (M10) into bolt hole A in the location shown. Then lift the upper oil pan and remove it.

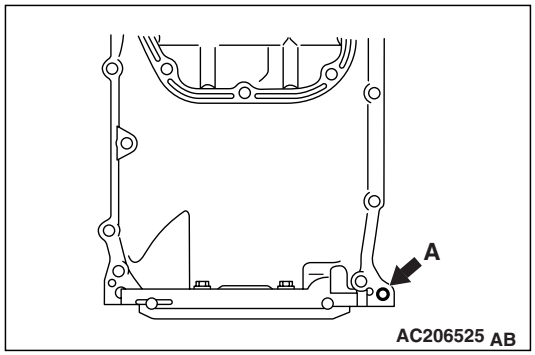

INSTALLATION SERVICE POINTS

>>A<< ENGINE UPPER OIL PAN INSTALLATION

1. Remove old sealant from the oil pan and cylinder block mating surfaces.
2. Degrease the sealant-coated surface and the engine mating surface.
3. Apply a bead of the sealant to the cylinder block mating surface of the engine oil pan as shown.

   Specified sealant: 3M™ AAD Part No.8672, 8704, 3M™ AAD Part No.8679/8678 or equivalent

   NOTE: The sealant should be applied in a continuous bead approximately 4.0 mm (0.16 inch) in diameter.
4. Assemble the oil pan to the cylinder block within 15 minutes after applying the sealant.

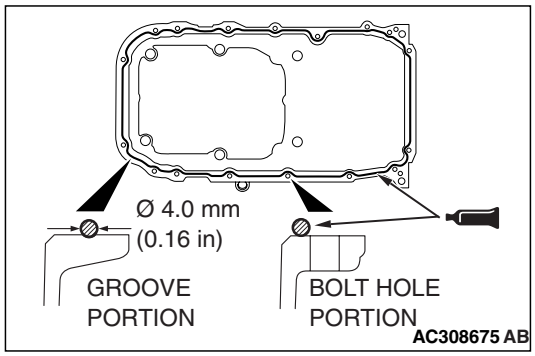

⚠ CAUTION

The bolt holes for bolts 13 and 14 in the illustration are cut away on the transaxle side. Be careful not to insert these bolts at an angle.

5. Tighten the bolts in the order shown in the illustration.

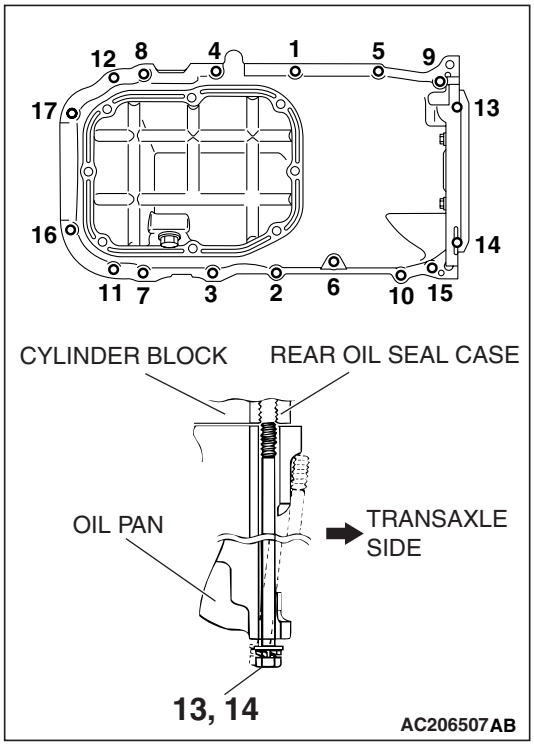

>>B<< ENGINE LOWER OIL PAN INSTALLATION

1. Remove old sealant from the engine lower oil pan and engine upper oil pan.
2. Apply a bead of the sealant to the mating surface of the engine lower oil pan as shown.

   Specified sealant: 3M™ AAD Part No.8672, 8704, 3M™ AAD Part No.8679/8678 or equivalent

   NOTE: Install the engine lower oil pan within 15 minutes after applying sealant.
3. Assemble the engine lower oil pan to the engine upper oil pan.

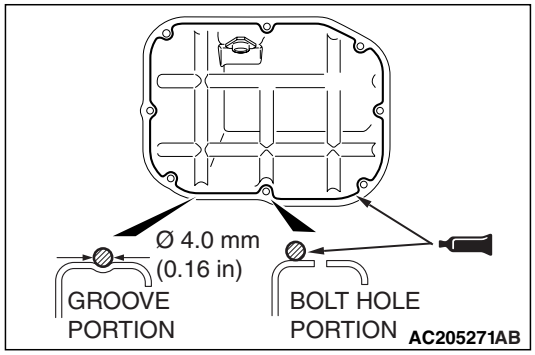

⚠ CAUTION

Then wait at least one hour. Never start the engine or let engine oil or coolant touch the sealant surface during that time.

4. Tighten the bolts in the order shown in the illustration.

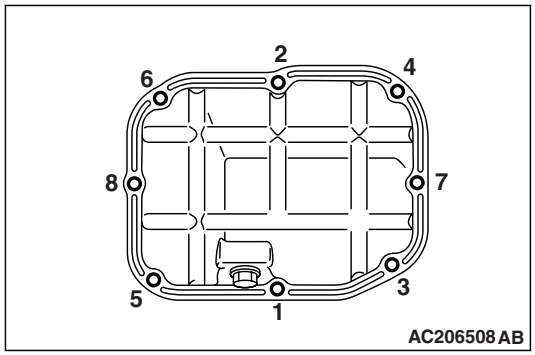

INSPECTION

M1112002600156

- Check the oil pan for cracks.
- Check the oil pan sealant-coated surface for damage and deformation.
- Check the oil screen for cracked, clogged or damaged wire net and pipe.

CRANKSHAFT OIL SEAL

REMOVAL AND INSTALLATION <FRONT OIL SEAL>

M1112003400564

Pre-removal and Post-installation Operation
- Timing Belt Removal and Installation (Refer to P.11C-59).

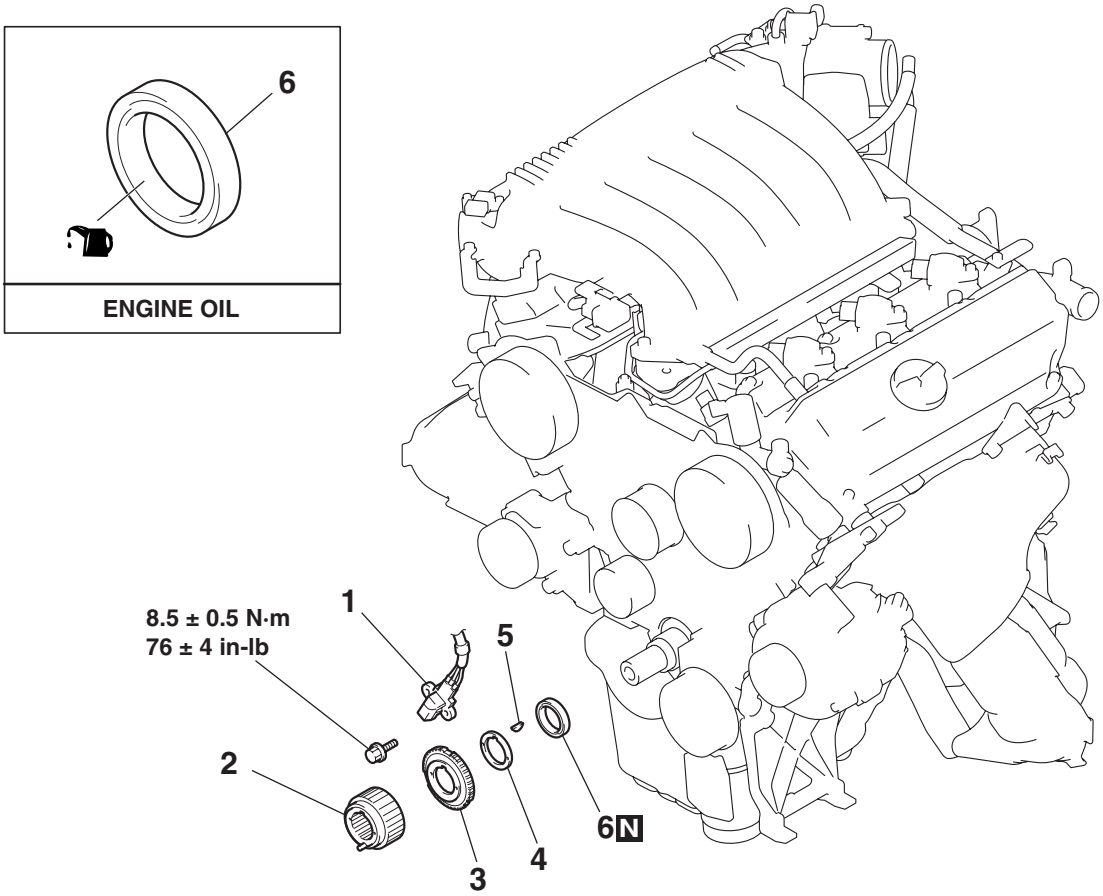

AC406180AB

REMOVAL STEPS
1. CRANKSHAFT POSITION SENSOR
>>B<< 2. CRANKSHAFT SPROCKET
>>B<< 3. CRANKSHAFT SENSING BLADE

REMOVAL STEPS (Continued)
>>B<< 4. CRANKSHAFT SPACER
5. KEY
>>A<< 6. CRANKSHAFT FRONT OIL SEAL

Required Special Tool:
- MD998717: Crankshaft Front Oil Seal Installer

INSTALLATION SERVICE POINTS

>>A<< CRANKSHAFT FRONT OIL SEAL INSTALLATION

1. Apply a small amount of engine oil to the oil seal lip and then insert the o-ring.

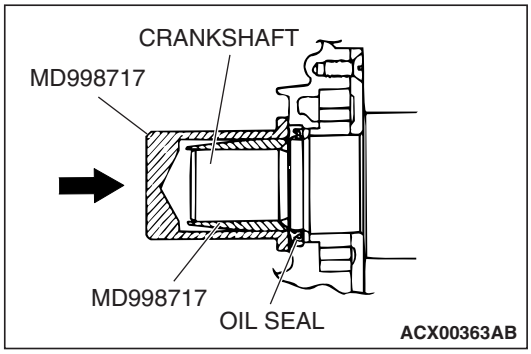

2. Using special tool MD998717, tap the oil seal into the front case.

>>B<< CRANKSHAFT SPACER / CRANKSHAFT SENSING BLADE / CRANKSHAFT SPROCKET INSTALLATION

To prevent the crankshaft pulley mounting bolt from loosening, degrease or clean the crankshaft, the crankshaft spacer, the crankshaft sensing blade and the crankshaft at the shown positions.

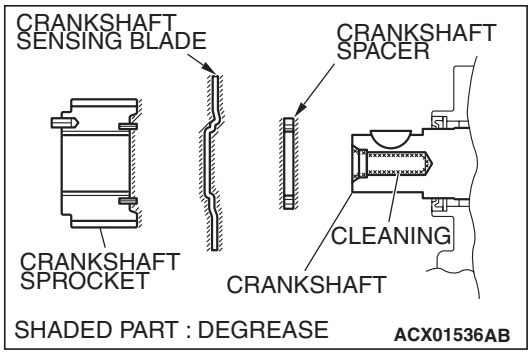

REMOVAL AND INSTALLATION <REAR OIL SEAL>

M1112003700639

Pre-removal and Post-installation Operation
- Manual Transaxle Assembly Removal and Installation (Refer to GROUP 22A, Transaxle <M/T>P.22A-20).
- Clutch Cover and Clutch Disc Removal and Installation (Refer to GROUP 21C, Clutch P.21C-2).
- Automatic Transaxle Assembly Removal and Installation (Refer to GROUP 23A, Transaxle <A/T>P.23A-409).

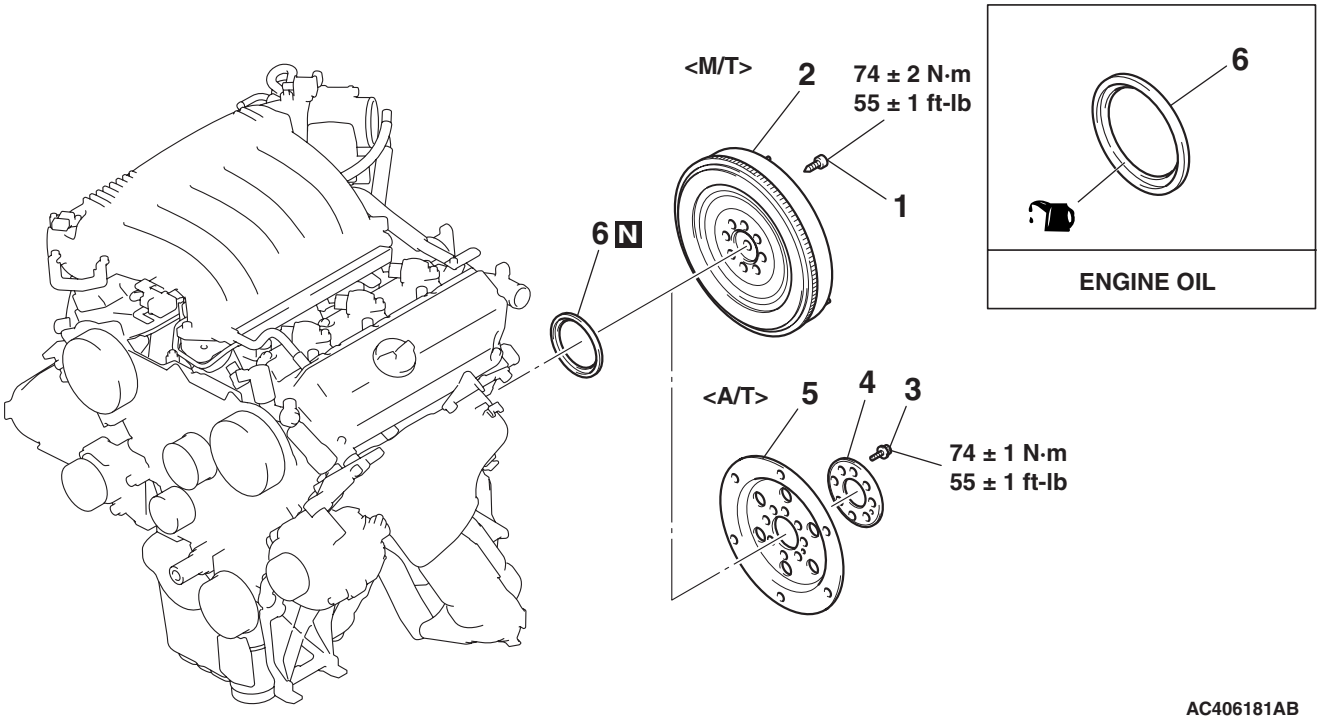

AC406181AB

FLYHEEL REMOVAL STEPS <M/T>

<<A>> >>B<< 1. FLYWHEEL BOLTS
2. FLYWHEEL
>>A<< 6. CRANKSHAFT REAR OIL SEAL

DRIVE PLATE REMOVAL STEPS <A/T>

<<A>> >>B<< 3. DRIVE PLATE BOLTS
4. ADAPTOR PLATE
5. DRIVE PLATE
>>A<< 6. CRANKSHAFT REAR OIL SEAL

Required Special Tools:

- MD998718: Crankshaft Rear Oil Seal Installer
- MD998781: Flywheel Stopper

REMOVAL SERVICE POINT

<<A>> FLYWHEEL BOLTS/DRIVE PLATE BOLTS REMOVAL

Use special tool MD998781 to secure the drive plate and remove the flywheel bolts or drive plate bolts.

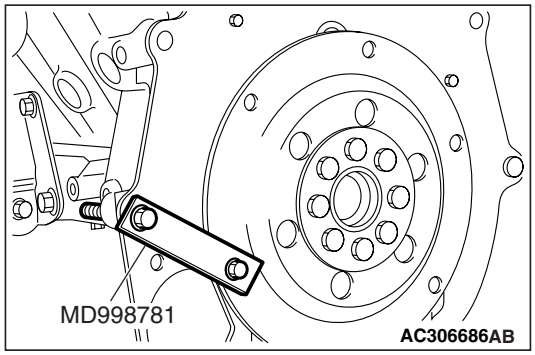

AC306686AB

TSB Revision

INSTALLATION SERVICE POINTS

>>A<< CRANKSHAFT REAR OIL SEAL INSTALLATION

1. Apply a small amount of engine oil to the entire circumference of the oil seal lip.
2. Use special tool MD998718 to tap in the oil seal as shown in the illustration.

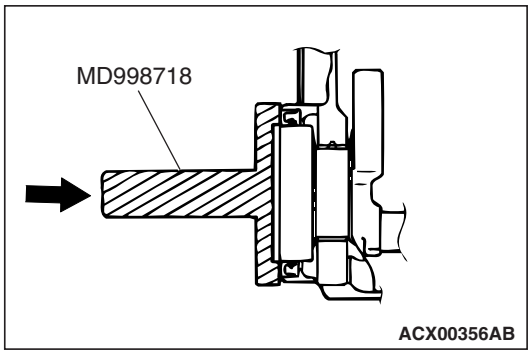

>>B<< DRIVE PLATE BOLTS/FLYWHEEL BOLTS INSTALLATION

Use special tool MD998781 in the same way as during removal to install the flywheel bolts or drive plate bolts.

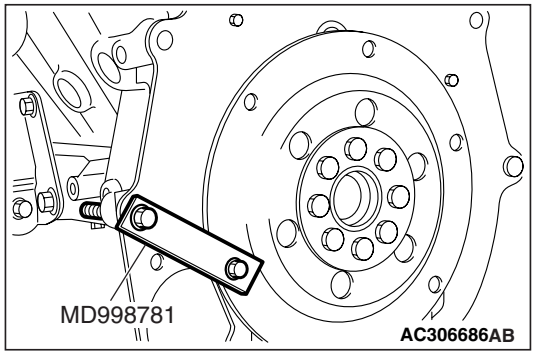

CYLINDER HEAD GASKET

REMOVAL AND INSTALLATION

M1112004001528

Pre-removal and Post-installation Operation
- Intake Manifold Removal and Installation (Refer to GROUP 15, Intake Manifold P.15-14).
- Exhaust Manifold Removal and Installation (Refer to GROUP 15, Exhaust Manifold P.15-19).
- Timing Belt Removal and Installation (Refer to P.11C-59).
- Thermostat Housing Removal and Installation (Refer to GROUP 14, Water Hose and Water Pipe P.14-39).
- Generator Removal and Installation (Refer to GROUP 16, Generator Assembly P.16-15).

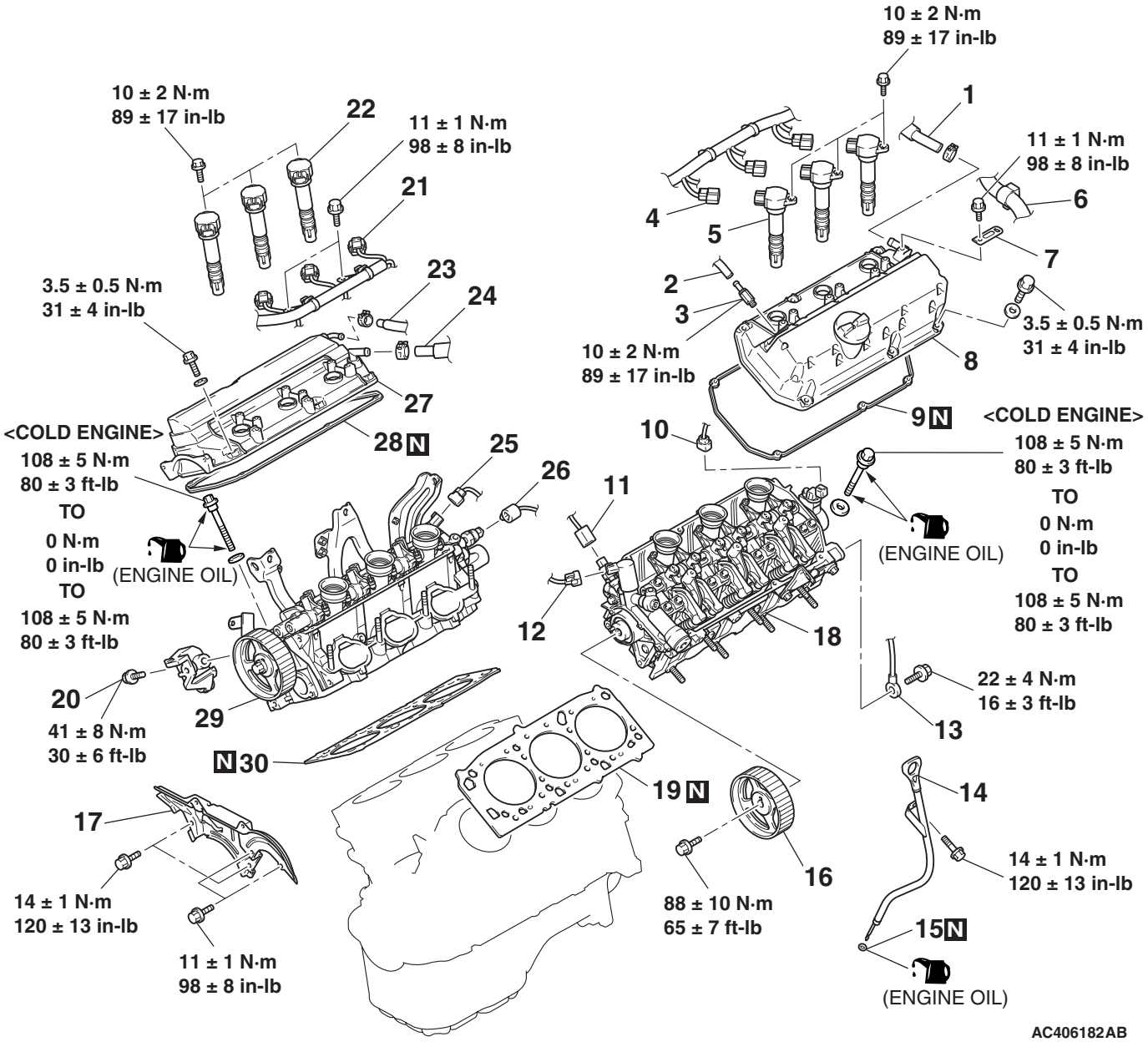

REMOVAL STEPS
1. BLOW-BY HOSE CONNECTION
2. PCV HOSE CONNECTION
3. PCV VALVE
4. IGNITION COIL CONNECTOR

REMOVAL STEPS (Continued)
5. IGNITION COIL
6. ENGINE CONTROL WIRING HARNESS CLAMP
7. HARNESS BRACKET

TSB Revision

REMOVAL STEPS (Continued)

8. ROCKER COVER
9. ROCKER COVER GASKET
10. CAMSHAFT POSITION SENSOR CONNECTOR
11. ENGINE OIL CONTROL VALVE CONNECTOR
12. ENGINE OIL PRESSURE SWITCH CONNECTOR
13. GROUNDING
14. ENGINE OIL DIPSTICK ASSEMBLY
15. O-RING

<<**A**>> >>**C**<< 16. CAMSHAFT SPROCKET

17. TIMING BELT REAR CENTER COVER

<<**B**>> >>**B**<< 18. LEFT BANK CYLINDER HEAD ASSEMBLY

>>**A**<< 19. CYLINDER HEAD GASKET

REMOVAL STEPS (Continued)

- POWER STEERING OIL PUMP ASSEMBLY (REFER TO GROUP 37, POWER STEERING OIL PUMP ASSEMBLY P.37-57).

20. POWER STEERING OIL PUMP BRACKET BOLT
21. IGNITION COIL CONNECTOR
22. IGNITION COIL
23. BREATHER HOSE CONNECTION
24. BLOW-BY HOSE CONNECTION
25. ENGINE OIL CONTROL VALVE CONNECTOR
26. ENGINE OIL PRESSURE SWITCH CONNECTOR
27. ROCKER COVER
28. ROCKER COVER GASKET

<<**B**>> >>**B**<< 29. RIGHT BANK CYLINDER HEAD ASSEMBLY

>>**A**<< 30. CYLINDER HEAD GASKET

Required Special Tools:

- MB990767: Front Hub and Flange End Yoke Holder
- MD998051: Cylinder Head Bolt Wrench
- MD998715: Crankshaft Pulley Holder Pin

REMOVAL SERVICE POINTS

<<A>> CAMSHAFT SPROCKET REMOVAL

Use special tools MD998715 and MB990767 to remove the camshaft sprocket.

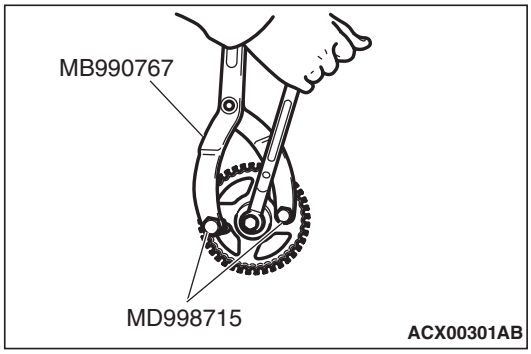

<<B>> CYLINDER HEAD ASSEMBLY REMOVAL

Use special tool MD998051 to loosen each bolt in two or three steps in the order shown in the illustration.

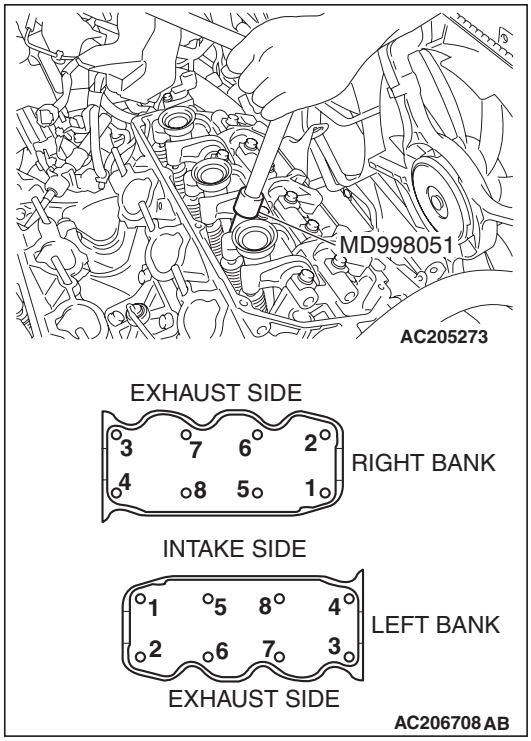

INSTALLATION SERVICE POINTS

>>A<< CYLINDER HEAD GASKET INSTALLATION

1. Degrease the cylinder head and cylinder block gasket mounting surfaces.
2. Make sure that the gasket has the proper identification mark for the engine.
3. Lay the cylinder head gasket on the cylinder block with the identification mark at the front top.

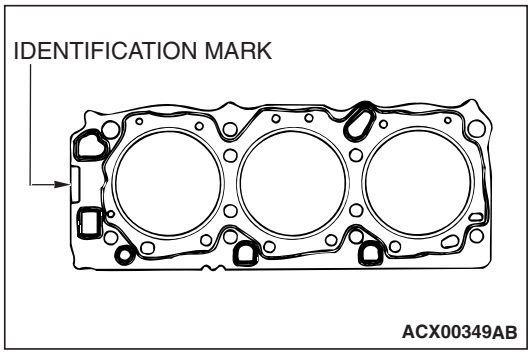

>>B<< CYLINDER HEAD ASSEMBLY INSTALLATION

⚠ CAUTION

Be careful that no foreign material gets into the cylinder, coolant passages or oil passages. Engine damage may result.

1. Use a scraper to clean the gasket surface of the cylinder head assembly.

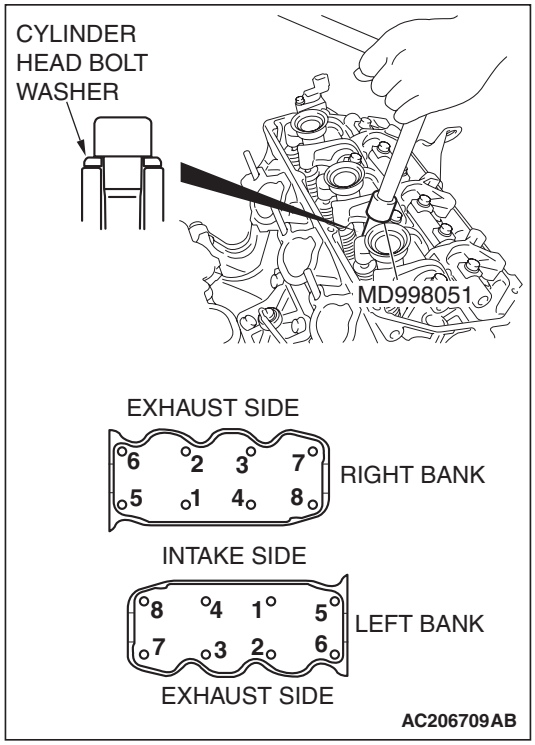

⚠ CAUTION

Install the head bolt washers with the beveled side facing upwards as shown in the illustration.

2. Using special tool MD998051 and a torque wrench, tighten the bolts to the specified torque in the order shown in the illustration. (in two or three cycles)

   Tightening torque: 108 ±5 N· m (80 ±3 ft-lb) to 0 N· m (0 in-lb) to 108 ±5 N· m (80 ±3 ft-lb)

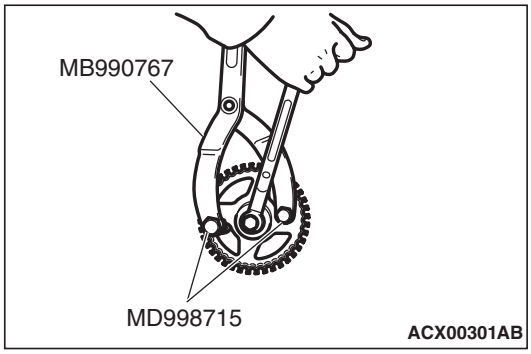

>>C<< CAMSHAFT SPROCKET INSTALLATION

1. Use special tools MD998715 and MB990767 in the same way as during removal to install the camshaft sprocket.
2. Tighten the camshaft sprocket mounting bolt to the specified torque.

   Tightening torque: 88 ±10 N· m (65 ±7 ft-lb)

TIMING BELT

REMOVAL AND INSTALLATION

M1112004301240

Pre-removal and Post-installation Operation
- Engine Cover Removal and Installation (Refer to P.11C-22).
- Under Cover Removal and Installation (Refer to GROUP 51, Under Cover P.51-8).
- Side Under Cover Removal and Installation (Refer to GROUP 51, Under Cover P.51-8).

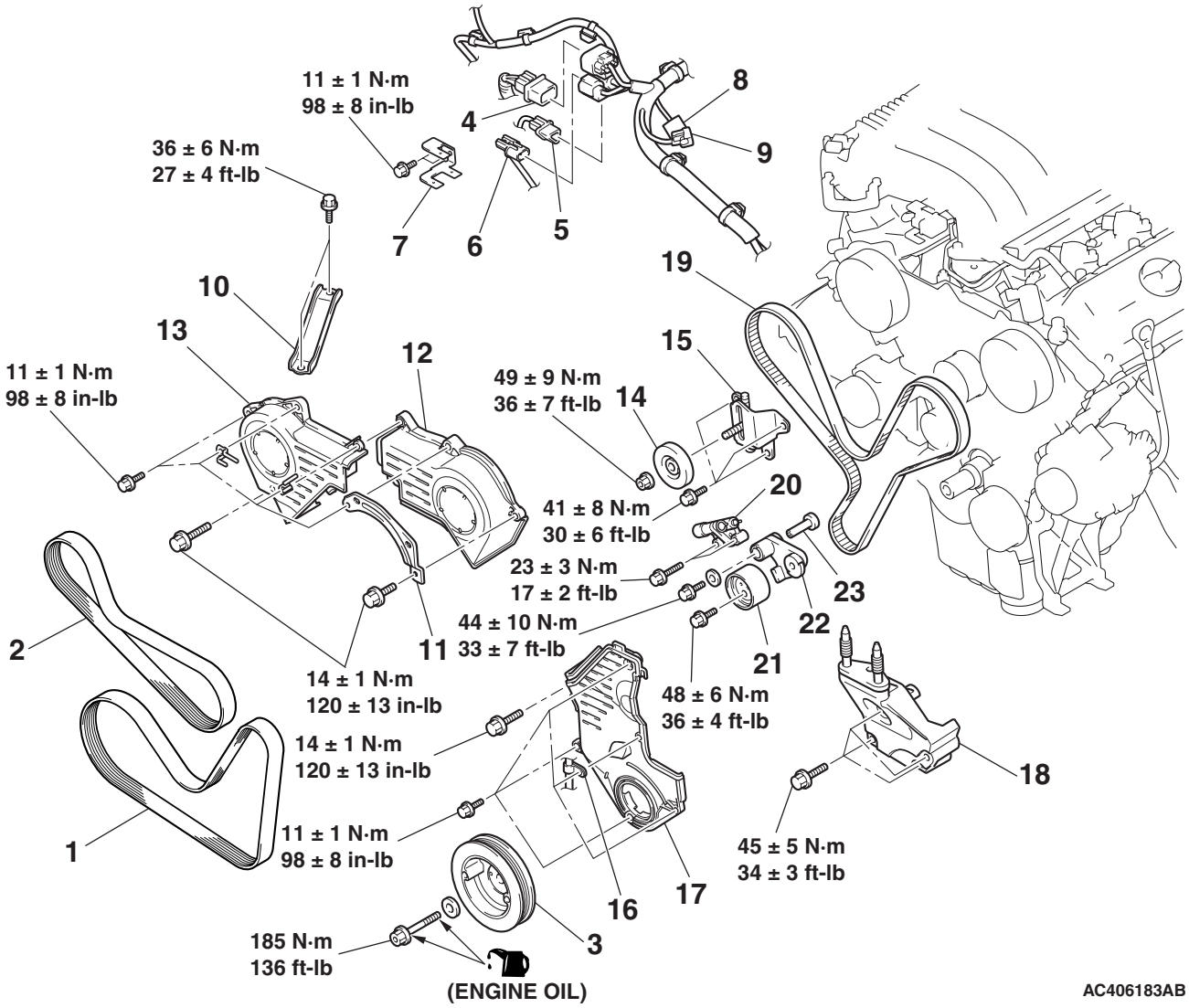

REMOVAL STEPS
1. GENERATOR DRIVE BELT
2. POWER STEERING OIL PUMP DRIVE BELT
<<A>> >>C<< 3. CRANKSHAFT PULLEY
4. CONTROL WIRING HARNESS AND INJECTOR WIRING HARNESS COMBINATION CONNECTOR
5. KNOCK SENSOR CONNECTOR
6. CRANKSHAFT POSITION SENSOR CONNECTOR

REMOVAL STEPS (Continued)
7. CONNECTOR BRACKET
8. ENGINE OIL PRESSURE SWITCH CONNECTOR
9. ENGINE OIL CONTROL VALVE CONNECTOR
10. ENGINE MOUNTING STAY
11. CONNECTOR BRACKET
12. TIMING BELT FRONT UPPER COVER, LEFT
13. TIMING BELT FRONT UPPER COVER, RIGHT

TSB Revision

REMOVAL STEPS (Continued)

14. TENSIONER PULLEY
15. TENSIONER BRACKET
16. CRANKSHAFT POSITION SENSOR HARNESS CLAMP
17. TIMING BELT LOWER COVER
    - ENGINE FRONT MOUNTING BRACKET (REFER TO GROUP 32, ENGINE MOUNTING P.32-4).
18. ENGINE SUPPORT BRACKET

<<**B**>> >>**B**<< 19. TIMING BELT

>>**A**<< 20. AUTO-TENSIONER

21. TENSIONER PULLEY
22. TENSIONER ARM
23. SHAFT

Required Special Tools:

- MB991800: Pulley Holder
- MB991802: Pin B
- MD998767: Tension Pulley Socket Wrench
- MD998769: Crankshaft Pulley Spacer

REMOVAL SERVICE POINTS

<<A>> CRANKSHAFT PULLEY REMOVAL

⚠ CAUTION

Use only the specified special tools, or a damaged pulley damper could result.

Use special tools MB991800 and MB991802 to remove the crankshaft pulley from the crankshaft.

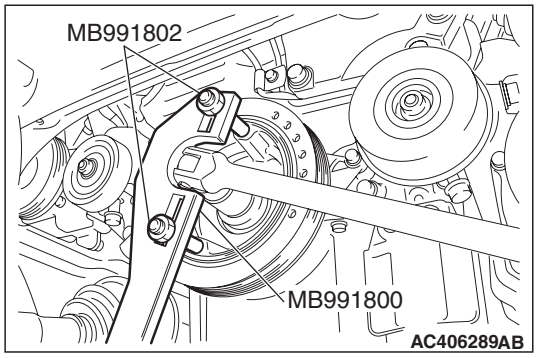

<<B>> TIMING BELT REMOVAL

⚠ CAUTION

Never turn the crankshaft counterclockwise.

1. Turn the crankshaft clockwise to align each timing mark and to set the number 1 cylinder to compression top dead center.
2. If the timing belt is to be reused, chalk an arrow on the flat side of the belt, indicating the clockwise direction.
3. Loosen the center bolt of the tensioner pulley, then remove the timing belt.

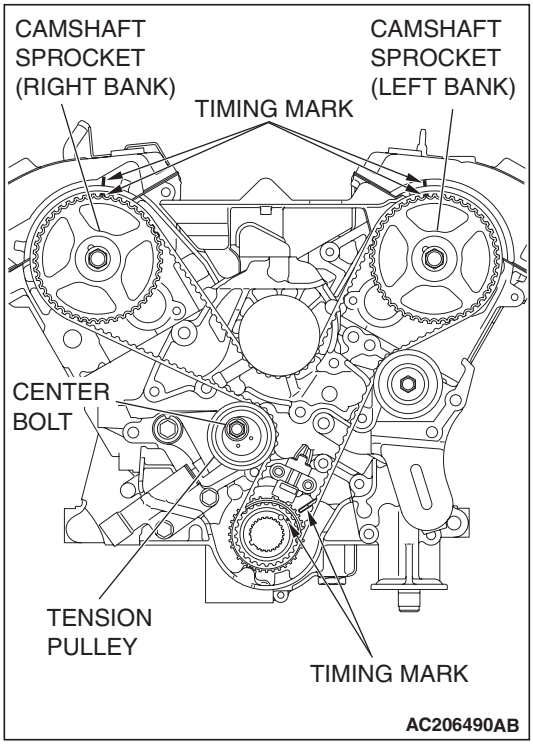

INSTALLATION SERVICE POINTS

>>A<< AUTO-TENSIONER INSTALLATION

1. If the auto-tensioner rod remains fully extended, set according to the following procedure.

⚠ CAUTION

Place the auto-tensioner perpendicular to the jaws of the vice.

(1) Place two dolly blocks in a vice as shown in the illustration, and then place the auto-tensioner in the vice.

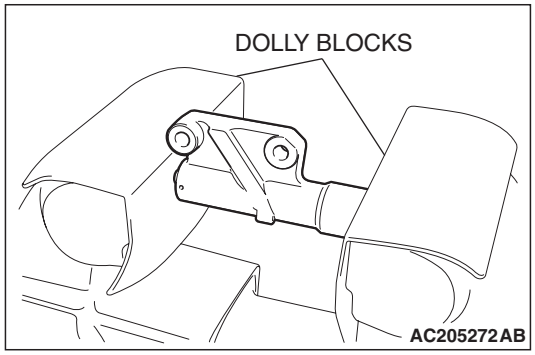

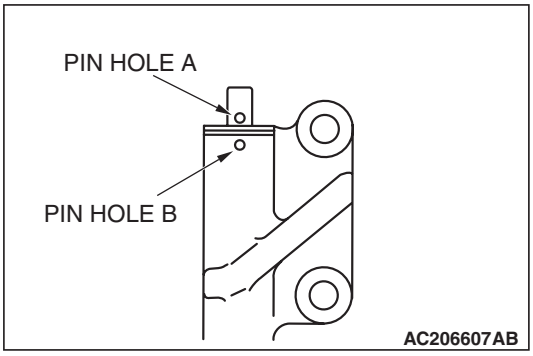

⚠ CAUTION

Never compress the pushrod too fast, or it may be damaged.

(2) Slowly compress the pushrod of the auto-tensioner until pin hole A in the pushrod is aligned with pin hole B in the cylinder.

(3) Insert the setting pin into the pin holes once they are aligned.

NOTE: If replacing the auto-tensioner, the pin will already be inserted into the pin holes of the new part.

⚠ CAUTION

Do not remove the setting pin from the auto-tensioner.

(4) Install the auto-tensioner to the engine.

>>B<< TIMING BELT INSTALLATION

1. Align the timing marks on the camshaft sprockets with those on the rocker cover and the timing mark on the crankshaft sprocket with that on the engine block as shown in the illustration.

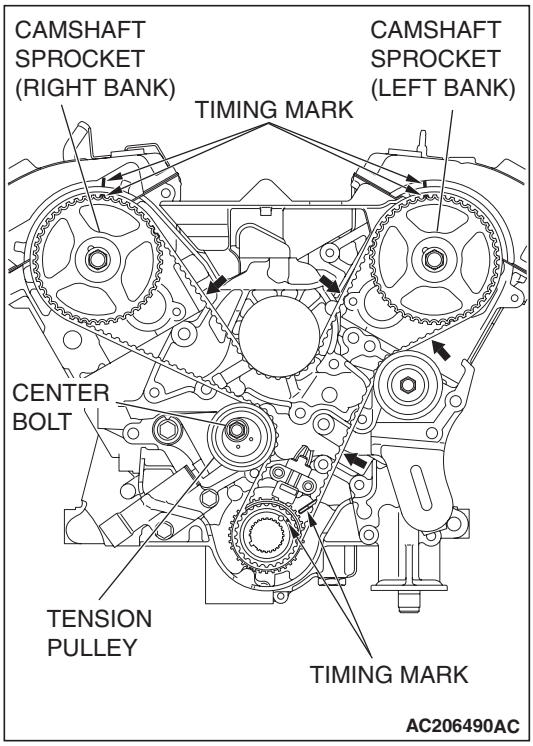

⚠ CAUTION

The camshaft sprocket (right bank) can turn easily due to the spring force applied, so be careful not to get your fingers caught.

2. Install the timing belt by the following procedure so that there is no deflection in the timing belt between each sprocket and pulley.
   (1) Crankshaft sprocket
   (2) Idler pulley
   (3) Camshaft sprocket (Left bank)
   (4) Water pump pulley
   (5) Camshaft sprocket (Right bank)
   (6) Tensioner pulley
3. Turn the camshaft sprocket (Right bank) counterclockwise until the tension side of the timing belt is firmly stretched. Check all the timing marks again.

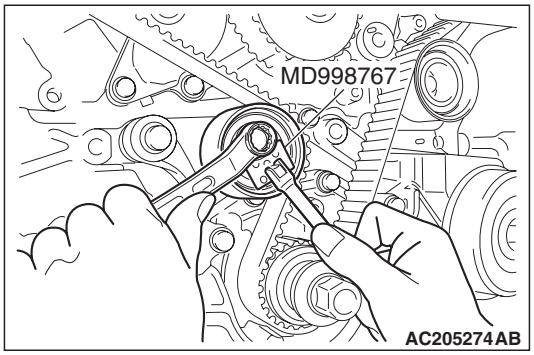

4. Use special tool MD998767 to push the tensioner pulley into the timing belt, then temporarily tighten the center bolt.

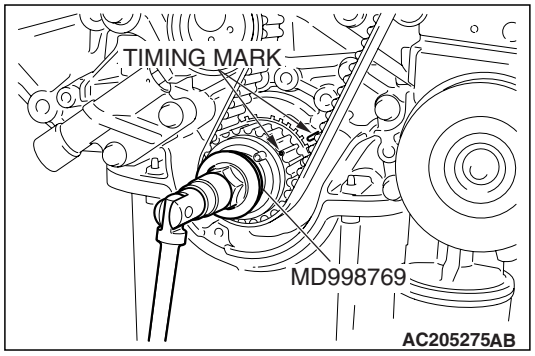

5. Use special tool MD998769 to turn the crankshaft 1/4 turn counterclockwise, then turn it again clockwise until the timing marks are aligned.

⚠ CAUTION

When tightening the center bolt, be careful that the tensioner pulley does not turn with the bolt.

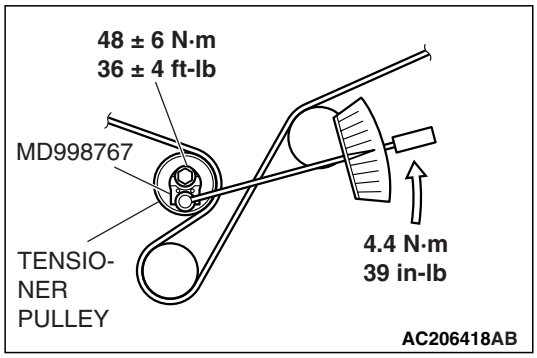

6. Loosen the center bolt of the tensioner pulley. Use special tool MD998767 and a torque wrench to apply the tension torque to the timing belt as shown in the illustration. Then tighten the center bolt to the specified torque.

   Standard value: 4.4 N· m (39 in-lb) <Timing belt tension torque>

   Tightening torque: 48 ±6 N· m (36 ±4 ft-lb)

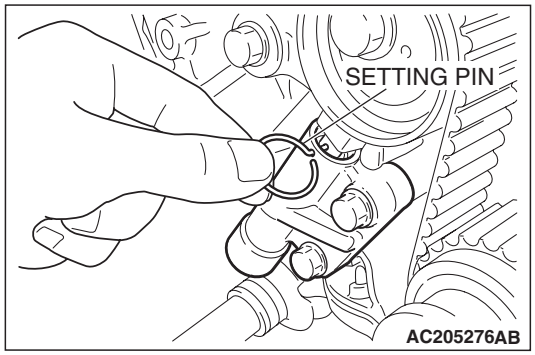

7. Remove the setting pin that has been inserted into the auto-tensioner.
8. Turn the crankshaft clockwise twice to align the timing marks.

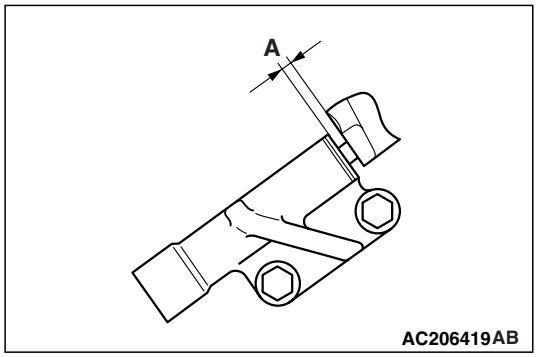

9. Wait for at least five minutes, then check that the auto-tensioner pushrod extends within the standard value range.

   Standard value (A): 4.8 – 6.0 mm (0.19 – 0.24 inch)

10. If not, repeat steps 1 through 8 above.
11. Check again that the timing marks of the sprockets are aligned.

>>C<< CRANKSHAFT PULLEY INSTALLATION

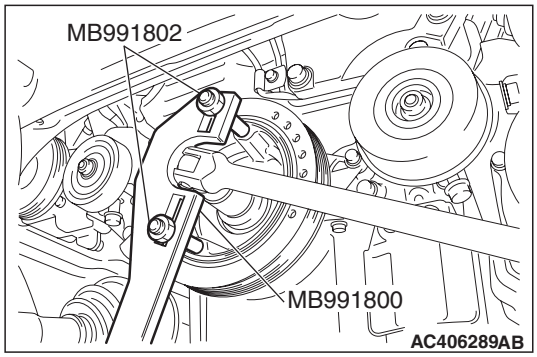

Use special tools MB991800 and MB991802 to install the crankshaft pulley.

INSPECTION

M1112004400653

AUTO-TENSIONER ADJUSTER CHECK

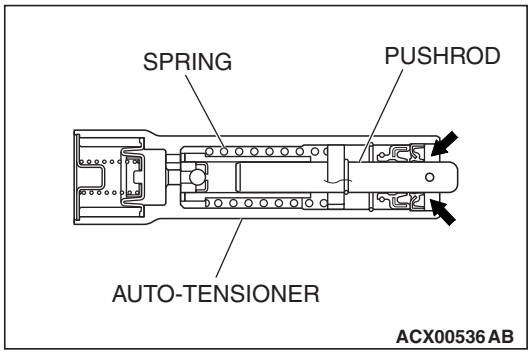

1. Check for oil leak from seal, and replace it if leak is detected.
2. Check for wear or damage at the top of the rod. Replace it, if required.

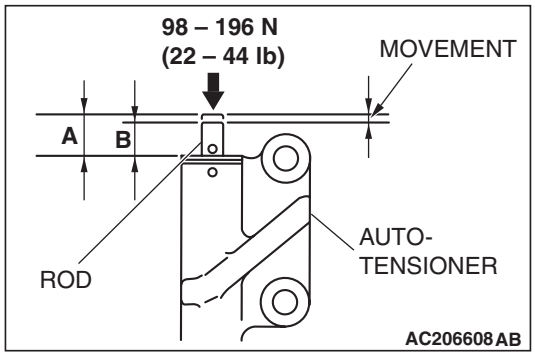

3. While holding the auto-tensioner with your hand, press the end of the pushrod against a metal surface (such as the cylinder block) with a force of 98 –196 N (22 – 44 pound) and measure how far the pushrod is pushed in.

   Standard value: Within 1 mm (0.04 inch)
   A: Length when no force is applied
   B: Length when force is applied
   A – B: Movement in

4. If the measured value is out of the standard value, replace the auto-tensioner adjuster.

SPECIFICATIONS

FASTENER TIGHTENING SPECIFICATIONS

M1112005800148

ITEM		SPECIFICATION
Camshaft and valve stem seal		
Accumulator bolt		54 ±5 N· m (40 ±4 ft-lb)
Camshaft position sensing cylinder bolt		22 ±4 N· m (16 ±3 ft-lb)
Camshaft position sensor bolt		11 ±1 N· m (98 ±8 in-lb)
Camshaft position sensor support bolt		14 ±1 N· m (120 ±13 in-lb)
Camshaft sprocket bolt		88 ±10 N· m (65 ±7 ft-lb)
Engine oil control valve bolt		11 ±1 N· m (98 ±8 in-lb)
Engine oil pressure switch		10 ±2 N· m (89 ±17 in-lb)
Harness bracket bolt		11 ±1 N· m (98 ±8 in-lb)
Ignition coil bolt		10 ±2 N· m (89 ±17 in-lb)
Intake manifold plenum stay bolt		49 ±6 N· m (37 ±4 ft-lb)
Oil feeder control valve housing bolt		24 ±3 N· m (18 ±2 ft-lb)
PCV valve		10 ±2 N· m (89 ±17 in-lb)
Power steering oil pump bracket connecting bolt		41 ±8 N· m (30 ±6 ft-lb)
Rocker cover bolt		3.5 ±0.5 N· m (31 ±4 in-lb)
Rocker shaft bolt (Intake side)		31 ±3 N· m (23 ±2 ft-lb)
Rocker shaft bolt (Exhaust side)		13 ±1 N· m (115 ±9 ft-lb)
Taper plug		47 ±7 N· m (35 ±5 ft-lb)
Throttle body stay bolt		22 ±1 N· m (16 ±1 ft-lb)
Timing belt rear center cover bolt	M6	11 ±1 N· m (98 ±8 in-lb)
	M8	14 ±1 N· m (120 ±13 in-lb)
Camshaft oil seal		
Camshaft sprocket bolt		88 ±10 N· m (65 ±7 ft-lb)
Crankshaft oil seal		
A/T drive plate bolt		74 ±1 N· m (55 ±1 ft-lb)
Crankshaft position sensor bolt		8.5 ±0.5 N· m (76 ±4 in-lb)
Flywheel bolt		74 ±2 N· m (55 ±1 ft-lb)
Cylinder head gasket		
Camshaft sprocket bolt		88 ±10 N· m (65 ±7 ft-lb)
Cylinder head bolt <Cold engine>		108 ±5 N· m (80 ±3 ft-lb) → 0 N· m (0 in-lb) → 108 ±5 N· m (80 ±3 ft-lb)
Engine oil dipstick bolt		14 ±1 N· m (120 ±13 in-lb)
Grounding connecting bolt		22 ±4 N· m (16 ±3 ft-lb)
Harness bracket bolt		11 ±1 N· m (98 ±8 in-lb)
Ignition coil bolt		10 ±2 N· m (89 ±17 in-lb)
PCV valve		10 ±2 N· m (89 ±17 in-lb)
Power steering oil pump bracket connecting bolt		41 ±8 N· m (30 ±6 ft-lb)

ITEM		SPECIFICATION
Rocker cover bolt		3.5 ±0.5 N· m (31 ±4 in-lb)
Timing belt rear center cover bolt	M6	11 ±1 N· m (98 ±8 in-lb)
	M8	14 ±1 N· m (120 ±13 in-lb)
Engine assembly		
Engine cover bolt		3.0 ±0.5 N· m (27 ±4 in-lb)
Engine front mounting bracket bolt	M10	58 ±7 N· m (43 ±5 ft-lb)
Engine front mounting bracket bolt and nut	M12	83 ±12 N· m (61 ±9 ft-lb)
Engine front mounting stay bolt		36 ±6 N· m (27 ±4 ft-lb)
Engine hanger bolt		35 ±6 N· m (26 ±4 ft-lb)
Engine oil dipstick bolt		14 ±1 N· m (120 ±13 in-lb)
Grounding bolt and nut		9.0 ±2.0 N· m (80 ±17 in-lb)
Grounding cable bolt		9.0 ±2.0 N· m (80 ±17 in-lb)
Intake manifold plenum stay (rear) bolt	M8	22 ±1 N· m (16 ±1 ft-lb)
	M10	49 ±6 N· m (37 ±4 ft-lb)
Power steering oil pump bolt		46 ±8 N· m (34 ±6 ft-lb)
Power steering oil pump nut		42 ±7 N· m (31 ±5 ft-lb)
Power steering oil reservoir connecting nut		12 ±2 N· m (102 ±22 in-lb)
Power steering pressure hose clamp bracket bolt		12 ±2 N· m (102 ±22 in-lb)
Starter bolt		30 ±3 N· m (23 ±2 ft-lb)
Starter terminal nut		12 ±2 N· m (102 ±22 in-lb)
Throttle body stay bolt		22 ±1 N· m (16 ±1 ft-lb)
Oil pan and oil screen		
Baffle plate bolt		11 ±1 N· m (97 ±9 in-lb)
Cover bolt		11 ±0.5 N· m (93 ±4 in-lb)
Engine oil dipstick bolt		14 ±1 N· m (120 ±13 in-lb)
Engine lower oil pan bolt		11 ±1 N· m (97 ±9 in-lb)
Engine oil pan drain plug		39 ±5 N· m (29 ±3 ft-lb)
Engine upper oil pan bolt		8.5 ±3.5 N· m (76 ±31 in-lb)
Engine upper oil pan to torque converter bolt		36 ±5 N· m (26 ±4 ft-lb)
Oil screen bolt		19 ±3 N· m (14 ±2 ft-lb)
Starter bolt		30 ±3 N· m (23 ±2 ft-lb)
Starter terminal nut		12 ±2 N· m (102 ±22 in-lb)
Torque converter connecting bolt <A/T>		49 ±3 N· m (36 ±2 ft-lb)
Timing belt		
Auto-tensioner bolt		23 ±3 N· m (17 ±2 ft-lb)
Crankshaft pulley center bolt		185 N· m (136 ft-lb)
Engine mounting stay bolt		36 ±6 N· m (27 ±4 ft-lb)
Engine support bracket bolt		45 ±5 N· m (34 ±3 ft-lb)
Harness bracket bolt		11 ±1 N· m (98 ±8 in-lb)
Tensioner arm bolt		44 ±10 N· m (33 ±7 ft-lb)

ITEM		SPECIFICATION
Tensioner bracket bolt		41 ±8 N· m (30 ±6 ft-lb)
Tensioner pulley bolt		48 ±6 N· m (36 ±4 ft-lb)
Tensioner pulley nut		49 ±9 N· m (36 ±7 ft-lb)
Timing belt lower cover bolt (bolt, flange)	M6	11 ±1 N· m (98 ±8 in-lb)
Timing belt lower cover bolt (bolt, washer assembled)	M10	14 ±1 N· m (120 ±13 in-lb)
Timing belt upper cover bolt (bolt, flange)	M6	11 ±1 N· m (98 ±8 in-lb)
	M8	14 ±1 N· m (120 ±13 in-lb)

SERVICE SPECIFICATIONS

M1112000300546

ITEM		STANDARD VALUE	LIMIT
Power steering drive belt tension (When checked)	Vibration frequency Hz	124 – 160	–
	Tension N (lb)	294 – 490 (66 – 110)	–
	Deflection (Reference value) mm (in)	12.3 – 16.2 (0.48 – 0.64)	–
Power steering drive belt tension (When adjusted)	Vibration frequency Hz (Reference)	134 – 151	–
	Tension N (lb)	343 – 441 (77 – 99)	–
	Deflection (Reference value) mm (in)	13.2 – 15.1 (0.52 – 0.59)	–
Power steering drive belt tension (When replaced)	Vibration frequency Hz (Reference)	160 – 189	–
	Tension N (lb)	490 – 686 (110 – 154)	–
	Deflection (Reference value) mm (in)	9.6 – 12.3 (0.38 – 0.48)	–
Generator drive belt tension (When checked)	Vibration frequency Hz	143 – 169	–
	Tension N (lb)	490 – 686 (110 – 154)	–
	Deflection (Reference value) mm (in)	8.4 – 10.7 (0.33 – 0.42)	–
Generator drive belt tension (When adjusted)	Vibration frequency Hz (Reference)	150 – 163	–
	Tension N (lb)	539 – 637 (121 – 143)	–
	Deflection (Reference value) mm (in)	8.9 – 10.1 (0.35 – 0.40)	–
Generator drive belt tension (When replaced)	Vibration frequency Hz (Reference)	180 – 202	–
	Tension N (lb)	785 – 981 (176 – 221)	–
	Deflection (Reference value) mm (in)	6.2 – 7.5 (0.24 – 0.30)	–

ITEM	STANDARD VALUE	LIMIT
Intake valve clearance (at hot) mm (in)	0.20 (0.008)	–
Basic ignition timing at idle	5° BTDC ±3°	–
Actual ignition timing at curb idle	Approximately 10° BTDC	–
CO contents %	0.5 or less	–
HC contents ppm	100 or less	–
Curb idle speed r/min	680 ±100	–
Compression pressure (200 r/min) kPa (psi)	1,550 (225)	Minimum 1,110 (161)
Compression pressure difference of all cylinder kPa (psi)	–	98 (14)
Intake manifold vacuum at curb idle kPa (in Hg)	–	Minimum 60 (18)
Cylinder block heater unit internal resistance Ω	19 – 30	–
Timing belt tension torque N· m (in-lb)	4.4 (39)	–
Auto tensioner rod protrusion amount mm (in)	4.8 – 6.0 (0.19 – 0.24)	–
Auto-tensioner pushrod movement mm (in)	Within 1.0 (0.04)	–

SEALANTS

M1112000500573

ITEM	SPECIFIED SEALANT
Camshaft position sensor support	3M™ AAD Part No.8672, 3M™ AAD Part No.8679/8678 or equivalent
Engine oil pressure switch	
Engine upper oil pan	3M™ AAD Part No.8672, 8704, 3M™ AAD Part No.8679/8678 or equivalent
Engine lower oil pan	